The City of Quincy
1305 Hancock Street
Quincy, MA. 02169

MONTCLAIR ELEMENTARY SCHOOL WINDOW REPLACEMENT

8 BELMONT STREET
QUINCY, MA. 02169

ISSUED FOR BID: April 18, 2012

ADDENDUM 1: April 27, 2012

WESSLING ARCHITECTS
1250 Hancock Street, Quincy MA 02169

Addendum Number 1 – April 27, 2012

The attention of Bidders submitting proposals for the above mentioned project located in Quincy, Massachusetts, is called to the following information to the Contract Documents. The following additions, clarifications, and/or deletions shall hereby include in their entirety within the scope of the Contract Documents and shall, in turn, form a part of the Proposals submitted for Bid.

PART 1 - GENERAL

1.1 The following additions, clarifications, and/or deletions shall hereby be included in their entirety within the scope of the Contract Documents and shall, in turn, form a part of the Proposals submitted for Bid.

1.2 The printable paperwork as posted is all that is necessary to turn in at the opening. Both bid forms "Proposal to the City of Quincy, Mass" and Document 00300 "Bid Form" must be filled out.

PART 2 - SPECIFICATIONS

2.1 TABLE OF CONTENTS

A. DIVISION 1 – GENERAL REQUIREMENTS
1. Add Section: 012200……UNIT PRICES……..…….2

B. DIVISION 8 – DOORS AND WINDOWS
1. Change 085113 Aluminum Windows page number from "11" to "12".

2.2 Document 003000 – BID FORM

A. 1.4 BASE BID revised with "Base Bid Options A and Option B."
1. Base Bid Option A: The Contractors Base Bid dollar amount will be based on best pricing.
2. Base Bid Option B: The Contractors Base Bid dollar amount will be based on fastest window delivery schedule.

2.3 Document 012200 – UNIT PRICES
1. New Specification Section that includes - Unit Price 1: The Contractor shall furnish and install if required, two (2) new steel angle clips (sizing, length, and thickness to be coordinated with window details and existing conditions once the exiting window is removed) at Window Type 20 in two (2) locations as noted on the contract documents exterior elevation sheets. The intent is to provide additional window support on either side of the windows at the bottom jamb and sill locations to prevent existing to remain air intake venting and ductwork from being damaged due to the weight of the new window.

2.4 Document 085113 – ALUMINUM WINDOWS – PART 2 - PRODUCTS

A. 2.1 MANUFACTURERS
1. A. Manufacturers: Remove "or Wausau Windows" and replace with ", Traco Windows, or Graham Windows.

Addendum Number 1 – April 27, 2012

2. B.2 - Remove "Wausau Window and Wall Systems –Series 3151" and replace with "Traco; A Division of Kawneer – Series 8400TL Isolock Window."
3. B. - Add 3. Graham Windows – Series S2200SH

B. 2.2 WINDOW REQUIREMENTS – C. Thermal Transmittance:
1. Change U-Factor "0.52" to "0.55".

C. 2.3 ALUMINUM WINDOWS – E. Glazing Schedule:
1. ADD GL-4: (As noted on elevation drawings)
   a. Exterior Lite: 1/8" clear annealed x .030" clear PVB x 1/8" clear annealed with a Solarban 60 low E on the 4th surface
   b. Air Space: 1/2" air space filled with Argon
   c. Interior Lite: 3/16" annealed, pattern 62 obscured glass

2. ADD GL-5: (As noted on elevation drawings)
   a. Exterior Lite: 1/4" clear annealed with a Solarban 60 low E on the 2nd surface
   b. Air Space: 1/2" air space filled with Argon
   c. Interior Lite: 3/16" annealed, pattern 62 obscured glass

D. 2.3 ALUMINUM WINDOWS – F. Insulated Panels:
1. Change Backer: "1/8" Hardboard" to "Water Insensitive Plastic" at item #'s 2. And 4.

E. 3.5 ATTIC STOCK – A.:
1. A.1. Change "2 panes of glass for each window type and glass type configuration." To "1 insulated glass unit for each window type and glass type configuration at ground level windows only.
2. A.2. Change "2 sets of complete window balances for each window type." To "2 sets of complete window balances for each single-hung window type."

PART 3 - DRAWINGS

3.1 Revision of Cover Sheet

A. Addendum 1 _ 04/27/12 was added.

B. Revised Sheet Attached.

3.2 Revision of Sheet A-001

A. Addendum 1_04/27/12 and revised drawings were added to the drawing list table.

B. Revised Sheet Attached.

3.3 Revision of Sheet AD-202

A. Revised note on Detail 1/AD-202.

B. Revised Sheet Attached.

Addendum Number 1 – April 27, 2012

3.4 Revision of Sheet A-201

A. Revised notes and glazing types on Detail 1/A-201.

B. Revised glazing types on Detail 2/A-201.

C. Revised Sheet Attached.

3.5 Revision of Sheet A-202

A. Revised notes and glazing types on Detail 1/A-202.

B. Revised notes on Detail 2/A-202.

C. Revised Sheet Attached.

3.6 Revision of Sheet A-203

A. Revised glazing types on Detail 2/A-203.

B. Revised Sheet Attached.

3.7 Revision to Sheet A-501

A. Revision to details and notes relating to decreased scope from the project. The decreased scope includes the removal of all exterior snap trim on all windows.

B. Revision to detail notes for further clarification on revised scope of work.

C. Revised details include: 1-6/A-501.

D. Revised Sheet Attached.

3.8 Revision to Sheet A-502

A. Revision to details and notes relating to decreased scope from the project. The decreased scope includes the removal of all exterior snap trim on all windows.

B. Revision to detail notes for further clarification on revised scope of work.

C. Revised details include: 1-3/A-502.

D. Revised Sheet Attached.

Addendum Number 1 – April 27, 2012

3.9 Revision to Sheet A-503

A. Revision to details and notes relating to decreased scope from the project. The decreased scope includes the removal of all exterior snap trim on all windows.

B. Revision to detail notes for further clarification on revised scope of work.

C. Revised details include: 1-6/A-503.

D. Revised Sheet Attached.

3.10 Revision to Sheet A-504

A. Revision to details and notes relating to decreased scope from the project. The decreased scope includes the removal of all exterior snap trim on all windows.

B. Revised details include: 2-4/A-504.

C. Revised Sheet Attached.

3.11 Revision to Sheet A-505

A. Revision to details and notes relating to decreased scope from the project. The decreased scope includes the removal of all exterior snap trim on all windows.

B. Revision to detail notes for further clarification on revised scope of work.

C. Revised details include: 1-5/A-501.

D. Revised Sheet Attached.

3.12 Revision to Sheet A-601

A. Revision to the window schedule relating to a change or addition in glazing types. Window types that are affected by the revision include the following: 1, 3-11, 13, 19, 25, and 27.

B. Revised Sheet Attached.

END OF ADDENDUM NO. 1

TABLE OF CONTENTS:

Division Section Title ..... Pages

SERIES 0 – BIDDING REQUIREMENTS AND CONTRACT FORMS
……City of Quincy Invitation to Bid……..2
000107……Seals Page 2
000115……List of Drawing Sheets.....1
002113……Instruction to Bidders.....4
Certificate of Insurance……...…1
Prevailing Wage Rate……....54
DCAM Update Statement Forms……...…13
MBE/WBE Requirements/ Forms…….……..5
003000……Bid Form 4
005000……Agreement Form 1
AIA Document A101 – 2007 9
AIA Document A201 – 2007 47
006000……Project Forms 2

CITY OF QUINCY

……Information and Instructions to Bidders 5
……City of Quincy Responsible Employer Ordinance.....11
……Certification Concerning Responsible Employer Ordinance.....1
……Certification Pursuant to Responsible Employer Ordinance 2
……Certificate of Non-Collusion.....1
……Tax Compliance Certificate 2
……Signature Authorization of Corporation 1
……Certification Relating to Debarment and Suspension.....1
……Certification of General Bidders on Public Construction Projects 1
……Certification of Sub-Bidders (if any) on Public Construction Projects 1

DIVISION 1 - GENERAL REQUIREMENTS
011000……Summary 5
012200……Unit Prices……..……..……..2
012300……Alternates 2
012500……Substitution Procedures 3
012600……Contract Modification Procedures 3
012900……Payment Procedures.....6
013100……Project Management and Coordination 9
013233……Photographic Documentation.....3
013300……Submittal Procedures 8
014000……Quality Requirements 11

015000……Temporary Facilities and Controls.....7
016000……Product Requirements.....5
017300……Execution 7
017419……Construction Waste Management & Disposal.....4
017700……Closeout Procedures.....6
017839……Project Record Documents……..…...5

DIVISION 2 - SITE CONSTRUCTION
024119……Selective Demolition……..……5

DIVISION 3 - CONCRETE
NOT APPLICABLE

DIVISION 4 - MASONRY
NOT APPLICABLE

DIVISION 5 – METALS
NOT APPLICABLE

DIVISION 6 - WOOD AND PLASTICS
061000……Rough Carpentry.....4
062023……Interior Finish Carpentry……..4

DIVISION 7 - THERMAL AND MOISTURE PROTECTION
072100……Thermal Insulation.....4
076200……Sheet Metal Flashing…….……...8
079200……Joint sealants 9

DIVISION 8 - DOORS AND WINDOWS
084133……Aluminum Framed Storefront……10
085113……Aluminum Windows……..…...……...……12

DIVISION 9 - FINISHES
092300……Gypsum Plastering…….……4
099123……Interior Painting……..…6
099600……High-Performance Coatings……...6

DIVISION 10 - SPECIALTIES
NOT APPLICABLE

DIVISION 11 - EQUIPMENT
NOT APPLICABLE

DIVISION 12 - FURNISHINGS
NOT APPLICABLE .....

DIVISION 13 - SPECIAL CONSTRUCTION
NOT APPLICABLE

DIVISION 14 - CONVEYING SYSTEMS
NOT APPLICABLE

DIVISION 15 - MECHANICAL
NOT APPLICABLE

DIVISION 16 - ELECTRICAL
NOT APPLICABLE

DIVISION 22 - PLUMBING
NOT APPLICABLE

APPENDIX A
……Existing Conditions Photo Report Montclair Elementary School…….20

END OF SECTION TABLE OF CONTENTS

SECTION 003000 – BID FORM

PART 1 - GENERAL

1.1 Submit bids in compliance with Document 002113 – Instructions to Bidders. Fill in all blanks. The Owner, reserves the right to reject incomplete bid forms.

1.2 This Bidding Document is not part of the Contract Documents, unless specifically referenced in the Owner/Contractor Agreement.

PROJECT NAMES: Montclair Elementary School Window Replacement
8 Belmont Street
Quincy, MA. 02171

1.3 The undersigned proposes to furnish all labor and materials required for construction of the above, described project in accordance with the Contract Documents including drawings and specifications prepared by Stephen J. Wessling Architects, Inc. dated April 18, 2012.

Name and Address of Bidder: _____

_____

_____

1.4 BASE BID

A. The Bidder: The Contractor proposes to perform all of the Work required by the Contract Documents for the Montclair Window Replacement Project, for the Base Bid for the amount as follows (Please be advised the City of Quincy will waive all permit fees):

1. Base Bid Option A: The Contractors Base Bid dollar amount will be based on best pricing. (Fill in amount in words and numbers)

_____ **$** _____

2. Base Bid Option B: The Contractors Base Bid dollar amount will be based on fastest window delivery schedule. (Fill in amount in words and numbers)

_____ **$** _____

Total bid price for the entire scope includes working in close harmony behind the City of Quincy's abatement contractor, removing and replacing any damaged or rotted wood blocking or framing associated with the new aluminum window installation, and installing new aluminum windows, trim and hardware at all exterior window locations. Additionally, at select window lo-

cations, new storefront system and insulated metal panels will be installed around existing building utilities that pass through window masonry openings.

B. BONDS

1. If the Bidder is required to furnish a Performance Bond and Payment Bond (AIA A312) for the entire value of the Base Bid Work, add the following Performance Bond and Payment Bond amount to the Base Bid amount of: (Fill in amount in words and numbers)

_____ $ _____

C. PROJECT TIMELINE/RAIN DAYS

1. The Bidder proposes the following start and substantial completion for the entire project, including all three building roof replacement (Fill in):
   1) Proposed Starting Date: June 18, 2012
   2) Proposed Number of Work Days: 55 Days
   3) Final Completion Date: August 31, 2012

2. The Bidder shall include ten (10) total Rain Days for the project duration. Make-up days shall be on Saturdays.

D. By submitting this Bid Form, the Bidder certifies that he/she has visited the project site, is aware of existing conditions which affect the work, reviewed on-line facility events schedule and have reviewed the Contract Documents, including the following Addenda: (List Addenda received)

_____

E. BID QUALIFICATIONS

1. Submit and attach all bid qualifications and reasons for qualificaitions with this Bid Form in space provided below. Include impact of bid qualifications on time, cost, or quality. Bid qualifications may include: Cash flow requirements, assumptions for access to the work, assumptions for staging the work, assumptions for protecting existing and abutting work, proposed modifications to General Conditions, proposed modifications to drawings and specifications.
2. Contractor shall submit with the bid a sequencing plan for the roof replacement project. This sequencing plan will be closely reviewed for conformance with the Contract Documents and facility requirements. Contractors

F. Signed and sealed (Fill in name, position with company, bidder's signature, date and legal business name and address):

Name/Position: _____

Signature/Date: _____

Business Name/Address:

G. Bidder's Project Manager to be assigned to the Project (Fill in name):

_____

H. Bidder's Superintendant to be assigned to the Project (Fill in name):

_____

I. Bidder's/Sub-Contractor Roofing Forman to be assigned to the Project (Fill in name):

_____

PART 2 - ALTERNATES

2.1 SCHEDULE OF ALTERNATES

A. **ALTERNATE #1**: WINDOW 22 OPTION – STEEL GRATE AT BASE BID WINDOWS.
1. AT WINDOW 22 AT 5 LOCATIONS – THE CONTRACTOR SHALL REFINISH AND REINSTALL EXISTING STEEL GRATES OVER NEW ALUMINUM WINDOWS.
2. Alternate #1 amount to the Bid amount of: (Fill in amount in words and numbers)

(Add/Deduct) _____ $ ___ _____

B. **ALTERNATE #2**: WINDOW 22 OPTION – SCREENS AT BASE BID WINDOWS.
1. AT WINDOW 22 AT 5 LOCATIONS – THE CONTRACTOR SHALL PROVIDE AND INSTALL NEW ALUMINUM SCREENS FULL HEIGHT AND WIDTH OF THE BASE BID WINDOWS.
2. Alternate #2 amount to the Bid amount of: (Fill in amount in words and numbers)

(Add/Deduct) _____ $ ___ _____

C. **ALTERNATE #3**: WINDOW 22 OPTION – ALTERNATE WINDOWS WITH FIXED GLASS PANES WITH SINGLE HUNG WINDOW PROFILE.
1. AT WINDOW 22 ALTERNATE - AT 5 LOCATIONS – THE CONTRACTOR SHALL PROVIDE AND INSTALL NEW FIXED GLASS PANE WINDOWS WITH A SINGLE HUNG WINDOW PROFILE.
2. Alternate #3 amount to the Bid amount of: (Fill in amount in words and numbers)

(Add/Deduct) _____ $ ___ _____

D. **ALTERNATE #4**: WINDOW 22 OPTION – STEEL GRATES AT ALTERNATE #3 WINDOWS.

1. AT WINDOW 22 ALTERNATE - AT 5 LOCATIONS – THE CONTRACTOR SHALL REFINISH AND REINSTALL EXISTING STEEL GRATES OVER NEW ALUMINUM WINDOWS.
2. Alternate #4 amount to the Bid amount of: (Fill in amount in words and numbers)

   (Add/Deduct) _____ $ ___ _____

E. **ALTERNATE #5**: WINDOW 22 OPTION – SCREENS AT ALTERNATE #3 WINDOWS.

1. AT WINDOW 22 AT 5 LOCATIONS – THE CONTRACTOR SHALL PROVIDE AND INSTALL NEW ALUMINUM SCREENS FULL HEIGHT AND WIDTH OF THE ALTERNATE #3 WINDOWS.
2. Alternate #5 amount to the Bid amount of: (Fill in amount in words and numbers)

   (Add/Deduct) _____ $ ___ _____

END OF SECTION 003000

SECTION 012200 - UNIT PRICES

PART 1 - GENERAL

1.1 RELATED DOCUMENTS

A. Drawings and general provisions of the Contract, including General and Supplementary Conditions and other Division 01 Specification Sections, apply to this Section.

1.2 SUMMARY

A. Section includes administrative and procedural requirements for unit prices.

B. Related Requirements:

1. Section 012600 "Contract Modification Procedures" for procedures for submitting and handling Change Orders.
2. Section 014000 "Quality Requirements" for general testing and inspecting requirements.

1.3 DEFINITIONS

A. Unit price is an amount incorporated in the Agreement, applicable during the duration of the Work as a price per unit of measurement for materials, equipment, or services, or a portion of the Work, added to or deducted from the Contract Sum by appropriate modification, if the scope of Work or estimated quantities of Work required by the Contract Documents are increased or decreased.

1.4 PROCEDURES

A. Unit prices include all necessary material, plus cost for delivery, installation, insurance, applicable taxes, overhead, and profit.

B. Measurement and Payment: See individual Specification Sections for work that requires establishment of unit prices. Methods of measurement and payment for unit prices are specified in those Sections.

C. Owner reserves the right to reject Contractor's measurement of work-in-place that involves use of established unit prices and to have this work measured, at Owner's expense, by an independent surveyor acceptable to Contractor.

D. List of Unit Prices: A schedule of unit prices is included in Part 3. Specification Sections referenced in the schedule contain requirements for materials described under each unit price.

PART 2 - PRODUCTS (Not Used)

PART 3 - EXECUTION

3.1 SCHEDULE OF UNIT PRICES

A. Unit Price 1: The Contractor shall furnish and install if required, two (2) new steel angle clips (sizing, length, and thickness to be coordinated with window details and existing conditions once the exiting window is removed) at Window Type 20 in two (2) locations as noted on the contract documents exterior elevation sheets.

1. Description: The intent is to provide additional window support on either side of the windows at the bottom jamb and sill locations to prevent existing to remain air intake venting and ductwork from being damaged due to the weight of the new window.

2. Unit of Measurement: Total Cost.

END OF SECTION 012200

SECTION 085113 - ALUMINUM WINDOWS

PART 1 - GENERAL

1.1 RELATED DOCUMENTS

A. Drawings and general provisions of the Contract, including General and Supplementary Conditions and Division 01 Specification Sections, apply to this Section.

1.2 SUMMARY

A. Section includes aluminum windows for exterior locations.

B. Related Requirements:

1. Section 084113 "Aluminum-Framed Storefronts" for coordinating finish among aluminum fenestration units.

1.3 PREINSTALLATION MEETINGS

A. Pre-installation Conference: Conduct conference at Project site.

1. Review and finalize construction schedule and verify availability of materials, Installer's personnel, equipment, and facilities needed to make progress and avoid delays.
2. Review and discuss the finishing of aluminum windows that is required to be coordinated with the finishing of other aluminum work for color and finish matching.
3. Review, discuss, and coordinate the interrelationship of aluminum windows with other exterior wall components. Include provisions for anchorage, flashing, sealing perimeters, and protecting finishes.
4. Review and discuss the sequence of work required to construct a watertight and weathertight exterior building envelope.
5. Inspect and discuss the condition of substrate and other preparatory work performed by other trades.

1.4 ACTION SUBMITTALS

A. Product Data: For each type of product.

1. Include construction details, material descriptions, glazing and fabrication methods, dimensions of individual components and profiles, hardware, and finishes for aluminum windows.

B. Shop Drawings: Include plans, elevations, sections, hardware, accessories, insect screens, operational clearances, and details of installation, including anchor, flashing, and sealant installation.

C. Samples: For each exposed product and for each color specified, 2 by 4 inches (50 by 100 mm) in size.

D. Samples for Initial Selection: For units with factory-applied color finishes.

1. Include similar Samples of hardware and accessories involving color selection.

E. Samples for Verification: For aluminum windows and components required, showing full range of color variations for finishes, and prepared on Samples of size indicated below:

1. Exposed Finishes: 2 by 4 inches (50 by 100 mm).
2. Exposed Hardware: Full-size units.

F. Product Schedule: For aluminum windows. Use same designations indicated on Drawings.

1.5 INFORMATIONAL SUBMITTALS

A. Qualification Data: For manufacturer and Installer.

B. Product Test Reports: For each type of aluminum window, for tests performed by a qualified testing agency.

C. Field quality-control reports.

D. Sample Warranties: For manufacturer's warranties.

1.6 QUALITY ASSURANCE

A. Manufacturer Qualifications: A manufacturer capable of fabricating aluminum windows that meet or exceed performance requirements indicated and of documenting this performance by test reports, and calculations.

B. Installer Qualifications: An installer acceptable to aluminum window manufacturer for installation of units required for this Project.

C. Mockups: Build mockups to verify selections made under Sample submittals and to demonstrate aesthetic effects and set quality standards for materials and execution.

1. Build mockup of typical wall area as shown on Drawings.
2. Approval of mockups does not constitute approval of deviations from the Contract Documents contained in mockups unless Architect specifically approves such deviations in writing.

1.7 WARRANTY

A. Manufacturer's Warranty: Manufacturer agrees to repair or replace aluminum windows that fail in materials or workmanship within specified warranty period.

1. Failures include, but are not limited to, the following:

   a. Failure to meet performance requirements.
   b. Structural failures including excessive deflection, water leakage, condensation, and air infiltration.
   c. Faulty operation of movable sash and hardware.
   d. Deterioration of materials and finishes beyond normal weathering.
   e. Failure of insulating glass.

2. Warranty Period:

   a. Window: Ten [10] years from date of Substantial Completion.
   b. Glazing Units: Ten [10] years from date of Substantial Completion.
   c. Aluminum Finish: Ten [10] years from date of Substantial Completion.
   d. Thermal Break: Ten [10] years from date of Substantial Completion.

PART 2 - PRODUCTS

2.1 MANUFACTURERS

A. Manufacturers: Subject to compliance with requirements, provide products by one of the following only: Winco Window Company, Efco Corporation**, Traco Windows, or Graham Windows.**

B. Basis-of-Design Product: Subject to compliance with requirements, provide Winco Window Company -Series 4410S or comparable product by one of the following only:
   1. EFCO Corporation; a Pella company –Series 675.
   2. Traco; A Division of Kawneer –Series 8400TL Isolock Window.
   3. Graham Windows – Series S2200SH

C. Source Limitations: Obtain aluminum windows from single source from single manufacturer.

2.2 WINDOW PERFORMANCE REQUIREMENTS

A. Product Standard: Comply with AAMA/WDMA/CSA 101/I.S.2/A440 for definitions and minimum standards of performance, materials, components, accessories, and fabrication unless more stringent requirements are indicated.

   1. Window Certification: AMMA certified with label attached to each window.

B. Performance Class and Grade: AAMA/WDMA/CSA 101/I.S.2/A440 as follows:

   1. Minimum Performance Class: H-AW.
   2. Minimum Performance Grade: 60

C. Thermal Transmittance: NFRC 100 maximum whole-window U-factor **0.55** Btu/sq. ft. x h x deg F.

D. Solar Heat-Gain Coefficient (SHGC): NFRC 200 maximum whole-window SHGC of 0.38 (Glass), SHGC of 0.31 (Window).

E. Condensation-Resistance Factor (CRF): Provide aluminum windows tested for thermal performance according to AAMA 1503, showing a CRF of 52.

F. Thermal Movements: Provide aluminum windows, including anchorage, that allow for thermal movements resulting from the following maximum change (range) in ambient and surface temperatures by preventing buckling, opening of joints, overstressing of components, failure of joint sealants, failure of connections, and other detrimental effects. Base engineering calculation on surface temperatures of materials due to both solar heat gain and nighttime-sky heat loss.

1. Temperature Change: 120 deg F (67 deg C), ambient**.**

G. Sound Transmission Class (STC): Rated for not less than 30 STC when tested for laboratory sound transmission loss according to ASTM E 90 and determined by ASTM E 413.

H. Outside-Inside Transmission Class (OITC): Rated for not less than 30 OITC when tested for laboratory sound transmission loss according to ASTM E 90 and determined by ASTM E 1332.

2.3 ALUMINUM WINDOWS

A. Operating Types: Provide the following operating types in locations indicated on Drawings:
1. Single hung.
2. Fixed.

B. Frames and Sashes: Aluminum extrusions complying with AAMA/WDMA/CSA 101/I.S.2/A440.

1. Thermally Improved Construction: Fabricate frames, sashes, and muntins with an integral, concealed, low-conductance thermal barrier located between exterior materials and window members exposed on interior side in a manner that eliminates direct metal-to-metal contact.

C. Glass: Clear annealed glass, ASTM C 1036, Type 1, Class 1, q3.

1. Kind: Fully tempered required per building code.

D. Insulating-Glass Units: ASTM E 2190, certified through IGCC as complying with requirements of IGCC.

1. Glass: ASTM C 1036, Type 1, Class 1, q3.

a. Tint: Clear
b. Kind: Fully where required per building code.
c. Laminated: Exterior lite to have .030” PVB laminate where indicated on drawings.

2. Lites: Two

3. Filling: Fill space between glass lites with argon.
4. Low-E Coating: Solarban 60 applied to the second surface.

E. Glazing Schedule:

GL-1: (As noted on elevation drawings)

a. Exterior Lite: 1/4" clear annealed with a Solarban 60 low E on the 2nd surface
b. Air Space: 1/2" air space filled with Argon
c. Interior Lite: 1/4" clear annealed

GL -2: (Stairwells & Around Doors per Code and as noted on elevation drawings)

a. Exterior Lite: 1/8" clear annealed x .030" clear PVB x 1/8" clear annealed with a Solarban 60 low E on the 4th surface
b. Air Space: 1/2" air space filled with Argon
c. Interior Lite: 1/4" clear tempered

GL -3: (As noted on elevation drawings)

a. Exterior Lite: 1/8" clear annealed x .030" clear PVB x 1/8" clear annealed with a Solarban 60 low E on the 4th surface
b. Air Space: 1/2" air space filled with Argon
c. Interior Lite: 1/4" clear annealed

GL -4: (As noted on elevation drawings)

a. Exterior Lite: 1/8" clear annealed x .030" clear PVB x 1/8" clear annealed with a Solarban 60 low E on the 4th surface
b. Air Space: 1/2" air space filled with Argon
c. Interior Lite: 3/16" annealed, pattern 62 obscured glass

GL-5: (As noted on elevation drawings)

a. Exterior Lite: 1/4" clear annealed with a Solarban 60 low E on the 2nd surface
b. Air Space: 1/2" air space filled with Argon
c. Interior Lite: 3/16" annealed, pattern 62 obscured glass

F. Glazing System: Manufacturer's standard factory-glazing system that produces weathertight seal.

F. Insulated Panels: Provided insulated panels where indicated on the drawings as manufactured by High Standard Panels or equal.

1. Exterior Face: .032” Textured aluminum with a stock colored kynar finish.
2. Backer: **Water Insensitive Plastic**
3. Core: Isocyanurate
4. Backer: **Water Insensitive Plastic**
5. Interior Face: .032” Textured aluminum with a stock colored kynar finish.

G. Hardware, General: Provide manufacturer's standard hardware fabricated from aluminum, stainless steel, carbon steel complying with AAMA 907 or other corrosion-resistant material compatible with adjacent materials; designed to smoothly operate, tightly close, and securely lock windows, and sized to accommodate sash weight and dimensions.

1. Exposed Hardware Color and Finish: White bronze.

H. Main Frame Construction: The frame material shall be constructed from .063-inch nominal wall thickness of 6063-T6 aluminum alloy and tempered with a minimum depth of 4-inches. The sill shall have a nominal wall thickness of .090 –inch and shall be extruded from the same aluminum billet. All joinery of frame members shall be closely fit and mechanically fastened with screws. All frame joinery shall be sealed with small joint sealant.

I. Vent Frame Construction: All operating ventilators are no less than .080-inch nominal thickness of 6063-T6 aluminum alloy and temper with a depth of 1-11/16 –inch. Vent corners are machined and assembled by means of mechanical fastening with screws. All vent joinery shall be sealed with small joint sealant. Vents shall have one row of heavy fin seal wool pile weather-stripping and one row of rigid vinyl.

J. Hung Window Hardware:

1. Counterbalancing Mechanism: Complying with AAMA 902, concealed, of size and capacity to hold sash stationary at any open position. Provide Ultra-lift, class 5 balancers.
2. Locks and Latches: Allow unobstructed movement of the sash across adjacent sash in direction indicated and operated from the inside only.

K. Weather Stripping: Provide full-perimeter weather stripping for each operable sash unless otherwise indicated.

L. Fasteners: Noncorrosive and compatible with window members, trim, hardware, anchors, and other components. Generally retain "Exposed Fasteners" Subparagraph below. Revise if exposed fasteners are permitted.

1. Exposed Fasteners: Do not use exposed fasteners to the greatest extent possible. For application of hardware, use fasteners that match finish hardware being fastened.

M. Thermally Improved Construction: Fabricate aluminum windows with an integral, concealed, low-conductance thermal barrier; located between exterior materials and window members exposed on interior side; in a manner that eliminates direct metal-to-metal contact.

1. Provide thermal-break construction that has been in use for not less than ten years and has been tested to demonstrate resistance to thermal conductance and condensation and to show adequate strength and security of glass retention.
1. Provide thermal barriers tested according to AAMA 505; determine the allowable design shear flow per the appendix in AAMA 505.
2. Aluminum extrusions are to have a poured and debridged thermal break using integral structural two-part polyurethane thermal break. Polyamide (Insulbar) strips are not acceptable.
3. The thermal barrier pocket on the aluminum extrusion must be Azo-Braded (or similar patented product) to create a mechanical lock that effectively improves the

adhesive properties between the polyurethane polymer and the surface of the thermal pocket.

4. Window manufacturer must provide a pass-thru warranty from the manufacturer of the polyurethane thermal barrier that warrants against product failure as a result of dry shrinkage and/or fracturing of the polyurethane for a period not to exceed ten years from date of window manufacture.
5. Provide hardware with low conductivity or nonmetallic material for hardware bridging thermal breaks at frame or vent sash.

2.4 ACCESSORIES

A. Retain "Dividers (False Muntins)" Paragraph below if dividers are required. Indicate divider patterns on Drawings or insert requirements. Revise if muntins (true divided lites) are required.

B. Dividers (False Muntins): Provide extruded-aluminum divider grilles in designs indicated for each sash lite.

1. Type: Permanently located at exterior lite.
2. Pattern: As indicated on Drawings.
3. Profile: As indicated on Drawings.

C. Fluted Column Covers: Extruded-aluminum profiles in sizes and configurations indicated on Drawings.

D. Interior and Exterior Trim: Extruded-aluminum profiles in sizes and configurations indicated on Drawings.

E. Panning Trim: Extruded-aluminum profiles in sizes and configurations indicated on Drawings.

2.5 SCREENS

A. General: Extruded screen frames shall be fabricated from aluminum 6063-T6, painted to match windows.

1. Type and Location: Full, outside for single-hung sashes.

2. Screens shall be mounted on the exterior face of the window using #10 flat head tamper proof screws. Screws holes shall be covered with preformed, Isobutylene Tripolomer Tape prior to screen attachment. Screen attachment screws shall pass through preformed, Isobutylene Tripolomer Tape.

3. Screen Mesh: Screen mesh shall be 0.028” black powder coated stainless steel.

2.6 GLAZING TAPES

B. Back-Bedding Mastic Glazing Tapes: Preformed, Isobutylene Tripolomer Tape. Butyl-based, 100 percent solids elastomeric tape; nonstaining and nonmigrating in contact with nonporous surfaces.

1. Products: Subject to compliance with requirements, provide the following or equal:

a. Sika Corporation, Construction Products Division; SikaLastomer-95

Color: Gray
Specific Gravity (ASTM D 792): 1.44 to 1.56
Total Solids (ASTM C 771): 100%
Penetration (ASTM D 217): Cone at 77°F / 300gr. 70 to 90 (7.0 – 9.0 mm)
Flexibility (AAMA 800-92)(ASTM C 734): No cracking or loss of adhesion at -60°F (-51°C)
Elongation (ASTM C 908): 1100% min. 77°F (25°C)
Staining (ASTM D 925): Will not stain painted or unpainted surfaces.
Vehicle Bleed Out (ASTM C 771) 158°F (70°C) for 21 days: No exudation of vehicle on Whatman No. 40 filter paper.
Crazing to acrylic plastics: Will not craze plastics
Application Temperature product: -5°F to 120°F (-20°C to 49°C)
Tensile adhesive strength (ASTM C 907) 77°F (25°C): 17 to 20 psi min (cohesive failure)
Peel adhesion (ASTM D 3330 – modified 90° peel): 8 lbs/in. min (cohesive failure)
Corrosivity: No darkening, etching or salt deposits on GALVALUME®, KYNAR 500®, ZINCALUME®, aluminum, aluminized steel or galvanized metal.
Weatherability (ASTM G 53) (1000 h exposure): No cracking, bleeding or loss of rubbery characteristics.
Static water head test (MBMA ice damming): Sealant passes 8 in. water head in an erected interlocked panel joint.
Service temperature permanent: -60°F to 212°F (-51°C to 100°C)

2.7 FABRICATION

A. Fabricate aluminum windows in sizes indicated. Include a complete system for assembling components and anchoring windows.

B. Glaze aluminum windows in the factory.

C. Weather strip each operable sash to provide weathertight installation.

C. Weep Holes: Provide weep holes and internal passages to conduct infiltrating water to exterior.

D. Provide water-shed members above side-hinged sashes and similar lines of natural water penetration.

E. Mullions: Provide mullions and cover plates, matching window units, complete with anchors for support to structure and installation of window units. Allow for erection tolerances and provide for movement of window units due to thermal expansion and building deflections, as

indicated. Provide mullions and cover plates capable of withstanding design wind loads of window units.

F. Complete fabrication, assembly, finishing, hardware application, and other work in the factory to greatest extent possible. Disassemble components only as necessary for shipment and installation.

2.8 GENERAL FINISH REQUIREMENTS

A. Comply with NAAMM's "Metal Finishes Manual" for recommendations for applying and designating finishes.

B. Protect mechanical finishes on exposed surfaces from damage by applying a strippable, temporary protective covering before shipping.

C. Appearance of Finished Work: Variations in appearance of abutting or adjacent pieces are acceptable if they are within one-half of the range of approved Samples. Noticeable variations in the same piece are not acceptable. Variations in appearance of other components are acceptable if they are within the range of approved Samples and are assembled or installed to minimize contrast.

2.9 ALUMINUM FINISHES

A. Finish designations prefixed by AA comply with the system established by the Aluminum Association for designating aluminum finishes.

B. High-Performance Organic Finish (Two-Coat Fluoropolymer): AA-C12C40R1x (Chemical Finish: cleaned with inhibited chemicals; Chemical Finish: conversion coating; Organic Coating: manufacturer's standard two-coat, thermocured system consisting of specially formulated inhibitive primer and fluoropolymer color topcoat containing not less than 70 percent polyvinylidene fluoride resin by weight). Prepare, pretreat, and apply coating to exposed metal surfaces to comply with AMA 2605 and with coating and resin manufacturers' written instructions.

1. Color and Gloss: As selected by Architect from standard range of industry colors and color densities.

PART 3 -EXECUTION

3.1 EXAMINATION

A. Examine openings, substrates, structural support, anchorage, and conditions, with Installer present, for compliance with requirements for installation tolerances and other conditions affecting performance of the Work.

B. Verify rough opening dimensions, levelness of sill plate, and operational clearances.

C. Examine wall flashings, vapor retarders, water and weather barriers, and other built-in components to ensure weather tight window installation.

D. Proceed with installation only after unsatisfactory conditions have been corrected.

3.2 INSTALLATION

A. Comply with manufacturer's written instructions for installing windows, hardware, accessories, and other components. For installation procedures and requirements not addressed in manufacturer's written instructions, comply with installation requirements in ASTM E 2112.

B. Install windows level, plumb, square, true to line, without distortion or impeding thermal movement, anchored securely in place to structural support, and in proper relation to wall flashing and other adjacent construction to produce weathertight construction.

C. Install windows and components to drain condensation, water penetrating joints, and moisture migrating within windows to the exterior.

D. Separate aluminum and other corrodible surfaces from sources of corrosion or electrolytic action at points of contact with other materials.

3.3 FIELD QUALITY CONTROLER

A. Testing Agency: Owner will engage a qualified testing agency to perform tests and inspections.

1. Testing and inspecting agency will interpret tests and state in each report whether tested work complies with or deviates from requirements.

B. Testing Services: Testing and inspecting of installed windows shall take place as follows:

1. Testing Methodology: Testing of windows for air infiltration and water resistance shall be performed according to AAMA 502.
2. Air-Infiltration Testing:

   a. Test Pressure: That required to determine compliance with AAMA/WDMA/CSA 101/I.S.2/A440 performance class indicated.
   b. Allowable Air-Leakage Rate: One and a half times the applicable AAMA/WDMA/CSA 101/I.S.2/A440 rate for product type and performance class rounded down to one decimal place.

3. Water-Resistance Testing:

   a. Test Pressure: Two-thirds times test pressure required to determine compliance with AAMA/WDMA/CSA 101/I.S.2/A440 performance grade indicated.
   b. Allowable Water Infiltration: No water penetration.

4. Testing Extent: One window in each building (Buildings A, B, and C) as selected by Architect and a qualified independent testing and inspecting agency. Windows shall be tested after perimeter sealants have cured.
5. Test Reports: Prepared according to AAMA 502.

C. Remove and replace noncomplying windows and retest as specified above.

D. Additional testing and inspecting, at Contractor's expense, will be performed to determine compliance of replaced or additional work with specified requirements.

E. Prepare test and inspection reports.

3.4 ADJUSTING, CLEANING, AND PROTECTION

A. Adjust operating sashes and hardware for a tight fit at contact points and weather stripping for smooth operation and weather tight closure.

B. Clean exposed surfaces immediately after installing windows. Avoid damaging protective coatings and finishes. Remove excess sealants, glazing materials, dirt, and other substances.

1. Keep protective films and coverings in place until final cleaning.

C. Remove and replace glass that has been broken, chipped, cracked, abraded, or damaged during construction period.

D. Protect window surfaces from contact with contaminating substances resulting from construction operations. If contaminating substances do contact window surfaces, remove contaminants immediately according to manufacturer's written instructions.

3.5 ATTIC STOCK

A. Provide attic stock for aluminum windows that includes the following:

1. 1 insulated glass unit for each window type and glass type configuration at ground level windows only.

2. 2 sets of complete window balances for each single-hung window type.

3. 1 screen for each window type that receives a screen.

B. Attic stock shall be stored at an Owner specified location. Storage of attic stock shall be consistent with storage of same materials on the project, in stacking, protection, labeling, and handling.

C. Provide labels for each attic stock item or box of items that clearly define the attic stock for Montclair Elementary School Window Replacement.

1. Glass labels shall include glass size, type, description, window type frame the glass is associated with.

2. Balance labels shall include information on manufacturer, model number, weight limits, and window types associated to each balance.

3. Screen labels shall include manufacturer, dimensions, finish color and window type associated to screen.

END OF SECTION 085113

PROJECT:

MONTCLAIR ELEMENTARY WINDOW REPLACEMENT

8 BELMONT STREET
QUINCY, MA

CLIENT:

THE CITY OF QUINCY

QUINCY, MA

ARCHITECT:

WESSLING
ARCHITECTS
AIA-CSI-BOCA
PRESIDENTS PLACE, 1250 HANCOCK STREET, SUITE 815N
QUINCY, MA 02169 TEL. 617-773-8150 FAX 617-773-4902
wesslingarchitects.com

ADDENDUM 1___04/27/12
ISSUED FOR BID___04/18/12

NOT FOR CONSTRUCTION
PROFESSIONAL

COPYRIGHT ©STEPHEN J. WESSLING- ARCHITECTS, INC. 2012

12060 - MONTCLAIR ELEMENTARY WINDOW REPLACEMENT

Drawing name: J:_SJWDATA\12060 MontClair Elementary School Windows\Autocad\Addendum 1\12060 A-000_A1.dwg
Apr 27, 2012 - 12:59pm

ABBREVIATIONS

&	AND
L or ∠	ANGLE
@	AT
℄	CENTERLINE
Ø	DIAMETER OR ROUND
#	POUND OR NUMBER
(E)	EXISTING
+/-	APPROXIMATELY
ACOUS	ACOUSTICAL
ACP	ALUMINUM COMPOSITE PANEL
ACT	ACOUSTICAL CEILING TILE
AD	AREA DRAIN
ADJ	ADJUSTABLE
AFF	ABOVE FINISHED FLOOR
AGGR	AGGREGATE
AL, ALUM	ALUMINUM
APPROX	APPROXIMATE
ARCH	ARCHITECTURAL
ASPH	ASPHALT
AUD	AUDITORIUM
AWT	ACOUSTICAL WALL TREATMENT
BD	BOARD
BITUM	BITUMINOUS
BLDG	BUILDING
BLK	BLOCK
BLKG	BLOCKING
BM	BEAM
BOD	BOTTOM OF ROOF DECK
BOT	BOTTOM
CAB	CABINET
CB	CATCH BASIN
CEM	CEMENT
CER	CERAMIC
CI	CAST IRON
C.I.P.	CAST IN PLACE
CG	CORNER GUARD
CJ	CONTROL JOINT
CLG	CEILING
CLKG	CAULKING
CL, CLOS	CLOSET
CLR	CLEAR
CMU	CONCRETE MASONRY UNITS
CNTR	COUNTER
CO	CLOSED OPENING
COL	COLUMN
COMP	COMPRESSIBLE
CONC	CONCRETE
CONN	CONNECTION
CONSTR	CONSTRUCTION
CONT	CONTINUOUS
CONTR	CONTRACTOR
CORR	CORRIDOR
CPT	CARPET
CT	CERAMIC TILE
CTR	CENTER
CTSK	COUNTERSUNK
DBL	DOUBLE
DEG	DEGREES
DEPT	DEPARTMENT
DF	DRINKING FOUNTAIN
DET	DETAIL
DIA	DIAMETER
DIM	DIMENSION
DISP	DISPENSER
DN	DOWN
DO	DOOR OPENING
DR	DOOR
DWG	DRAWING
DS	DOWN SPOUT
DSP	DRY STANDPIPE
DWR	DRAWER
E	EAST
EA	EACH
EJ	EXPANSION JOINT
EL	ELEVATOR, ELEVATION
ELEC	ELECTRICAL
ELEV	ELEVATION, ELEVATOR
EMER	EMERGENCY
ENCL	ENCLOSURE
EP	ELECTRICAL PANEL BOARD
EQ	EQUAL
EQPT	EQUIPMENT
ETR	EXISTING TO REMAIN
EW	ELEVATED WALKWAY
EWC	ELECTRIC WATER COOLER
EXH	EXHAUST
EXIST	EXISTING
EXPO	EXPOSED
EXP	EXPANSION
EXT	EXTERIOR
FA	FIRE ALARM
FBO/IBC	FURNISHED BY OWNER INSTALLED BY CONTRACTOR
FBO/IBO	FURNISHED BY OWNER INSTALLED BY OWNER
FD	FLOOR DRAIN
FDN	FOUNDATION
FE	FIRE EXTINGUISHER
FEC	FIRE EXTINGUISHER CABINET
FHC	FIRE HOSE CABINET
FF	FINISH FLOOR
FIN	FINISH
FL	FLOOR
FL/FL	FLOOR TO FLOOR
FLASH	FLASHING
FLUOR	FLUORESCENT
FM	FLOOR MAT
FMRC	FIBERGLASS MESH REINFORCED CEMENT (BACKER BOARD)
FOF	FACE OF FINISH
FOS	FACE OF STUDS
FR	FIRE RATED
FRP	FIBERGLASS REINFORCED PLASTIC PANELS
FRPF	FIREPROOF
FRT	FLAME RESISTANT TREATED
F.T.	FIRE TREATED
GA	GAUGE
GALV	GALVANIZED
GB	GRAB BAR
GC	GENERAL CONTRACTOR
GFI	GROUND FAULT INTERRUPT
GL	GLASS
GL BLK	GLASS BLOCK
GND	GROUND
GR	GRADE
GWB	GYPSUM WALL BOARD
GYP	GYPSUM
HP	HANDICAPPED, HIGH POINT
HB	HOSE BIB
HC	HOLLOW CORE
HDWD	HARDWOOD
HDWE	HARDWARE
HM	HOLLOW METAL
HORIZ	HORIZONTAL
HR	HOUR
HGT	HEIGHT
HW	HARDWARE, HOT WATER
HWH	HOT WATER, HEATER
ID	INSIDE DIMENSION
INC	INCANDESCENT
INSUL	INSULATION
INT	INTERIOR
JAN	JANITOR
JT	JOINT
KD	KNOCKED DOWN
KIT	KITCHEN
LAB	LABORATORY
LAM	LAMINATE
LAV	LAVATORY
LCC	LEAD COATED COPPER
LH	LEFT HAND
LKR	LOCKER
LT	LIGHT
MATL	MATERIAL
MAX	MAXIMUM
MECH	MECHANICAL
MEMB	MEMBRANE
MTL	METAL
MFR	MANUFACTURER
MIN	MINIMUM, MINUTE
MIR	MIRROR
MISC	MISCELLANEOUS
MO	MASONRY OPENING
MSL	MEAN SEA LEVEL
MR	MOISTURE RESISTANT
MTD	MOUNTED
MUL	MULLION
N	NORTH
NGVD	NATIONAL GEODETIC VERTICAL DATUM
NIC	NOT IN CONTRACT
NO	NUMBER
NOM	NOMINAL
NTS	NOT TO SCALE
OC	ON CENTER
OCT	OCTAGONAL
OD	OUTSIDE DIAMETER
OFF	OFFICE
OH	OPPOSITE HAND
OPNG	OPENING
OPP	OPPOSITE
OVHD	OVERHEAD
PC	PRECAST
PCT	PORCELAIN CERAMIC TILE
PERF	PERFORATED
PL, ℙ	PLATE
P. LAM	PLASTIC LAMINATE
PLAS	PLASTER, PLASTIC
PLYWD	PLYWOOD
POL	POLISHED
PR	PAIR
PT	POINT
PTD	PAINTED
PART	PARTITION
QT	QUARRY TILE
R	RISER
RAD	RADIUS, R VALVE
RCMU	REINFORCED CMU
RCP	REFLECTED CEILING PLAN
RD	ROOF DRAIN
REF	REFERENCE
REIN	REINFORCED
REM	REMOVE
REQ'D	REQUIRED
RESIL	RESILIENT
REV	REVISION
RH	RIGHT HAND
RM	ROOM
RO	ROUGH OPENING
ROW	RIGHT OF WAY
RTU	ROOF TOP UNIT
S	SOUTH
SC	SOLID CORE
SCHED	SCHEDULE
SECT	SECTION
SF	SQUARE FEET
SG	SOUND GASKET
SH	SHELF
SHR	SHOWER
SHT	SHEET
SIM	SIMILAR
SOG	SLAB ON GRADE
SOH	SIMILAR OPPOSITE HAND
SPEC	SPECIFICATION
SQ	SQUARE
SS	STAINLESS STEEL
STA	STATION
STC	SOUND TRANSMISSION COEFFICIENT
STD	STANDARD
STL	STEEL
STOR	STORAGE
STRUCT	STRUCTURAL
SUSP	SUSPENDED
SVF	SHEET VINYL FLOORING
SYM	SYMMETRICAL
SYS	SYSTEM
T	TREAD
TEL	TELEPHONE
TER	TERRAZZO
T & G	TONGUE AND GROOVE
THK	THICK
TO	TOP OF
TOC	TOP OF CURB
TOP	TOP OF PARAPET
TOS	TOP OF SLAB, TOP OF STEEL
TOW	TOP OF WALL
TV	TELEVISION
TYP	TYPICAL
UL	UNDERWRITER LAB
UNF	UNFINISHED
UNO	UNLESS NOTED OTHERWISE
UR	URINAL
VB	VINYL BASE
VCT	VINYL COMPOSITION TILE
VERT	VERTICAL
VEST	VESTIBULE
VIF	VERIFY IN FIELD
VWC	VINYL WALL COVERING
W	WEST
W	WIDTH / WIDE
W/	WITH
WB	WOOD BASE
WC	WATER CLOSET, (TOILET)
WD	WOOD
WDW	WINDOW
WH	WALL HUNG
W/O	WITHOUT
WP	WATERPROOF
WP	WORK POINT
WSCT	WAINSCOT
WT	WEIGHT
WWF	WELDED WIRE FABRIC
X-REF	CROSS REFERENCE

SYMBOLS

101	ROOM NUMBER
1	WINDOW NUMBER
101	DOOR NUMBER
1	REVISION NUMBER
1	PARTITION TYPE
X / Axxx	DETAIL REFERENCE IN SECTION
X / Axxx	ELEVATION SYMBOL
X / Axxx	DETAIL REFERENCE W/ PLAN OR OTHER
X / Axxx	DETAIL REFERENCE

GENERAL NOTES

PROJECT INTENT:

THE MONTCLAIR ELEMENTARY SCHOOL WINDOW REPLACEMENT PROJECT IS TO REPLACE ANY ROTTED OR DAMAGED WOOD BLOCKING OR FRAMING ASSOCIATED WITH THE NEW ALUMINUM WINDOW INSTALLATION. PROVIDE NEW ALUMINUM WINDOWS, GLAZING, METAL PANELS, SEALANTS, AND TRIM AT ALL WINDOW LOCATIONS UNLESS OTHERWISE NOTED.

ADDITIONALLY, AT SELECT LOCATIONS, NEW ALUMINUM STOREFRONT FRAMING, GLAZING, METAL PANELS, SEALANT AND TRIM WILL BE INSTALLED AT EXISTING UTILITY LOCATIONS THAT CANNOT BE REMOVED. SCREENS WILL ALSO BE INSTALLED IN SELECT LOCATIONS.

THE WINDOW INSTALLER MUST WORK IN CLOSE HARMONY BEHIND THE CITY OF QUINCY'S ABATEMENT CONTRACTOR. THE CITY OF QUINCY'S INSTALLATION PRIORITY IS TO COMPLETE ALL CLASSROOMS FIRST, GENERAL ASSEMBLY SPACES SECOND, AND CORRIDORS AND STAIRWELLS LAST.

KEY PLAN

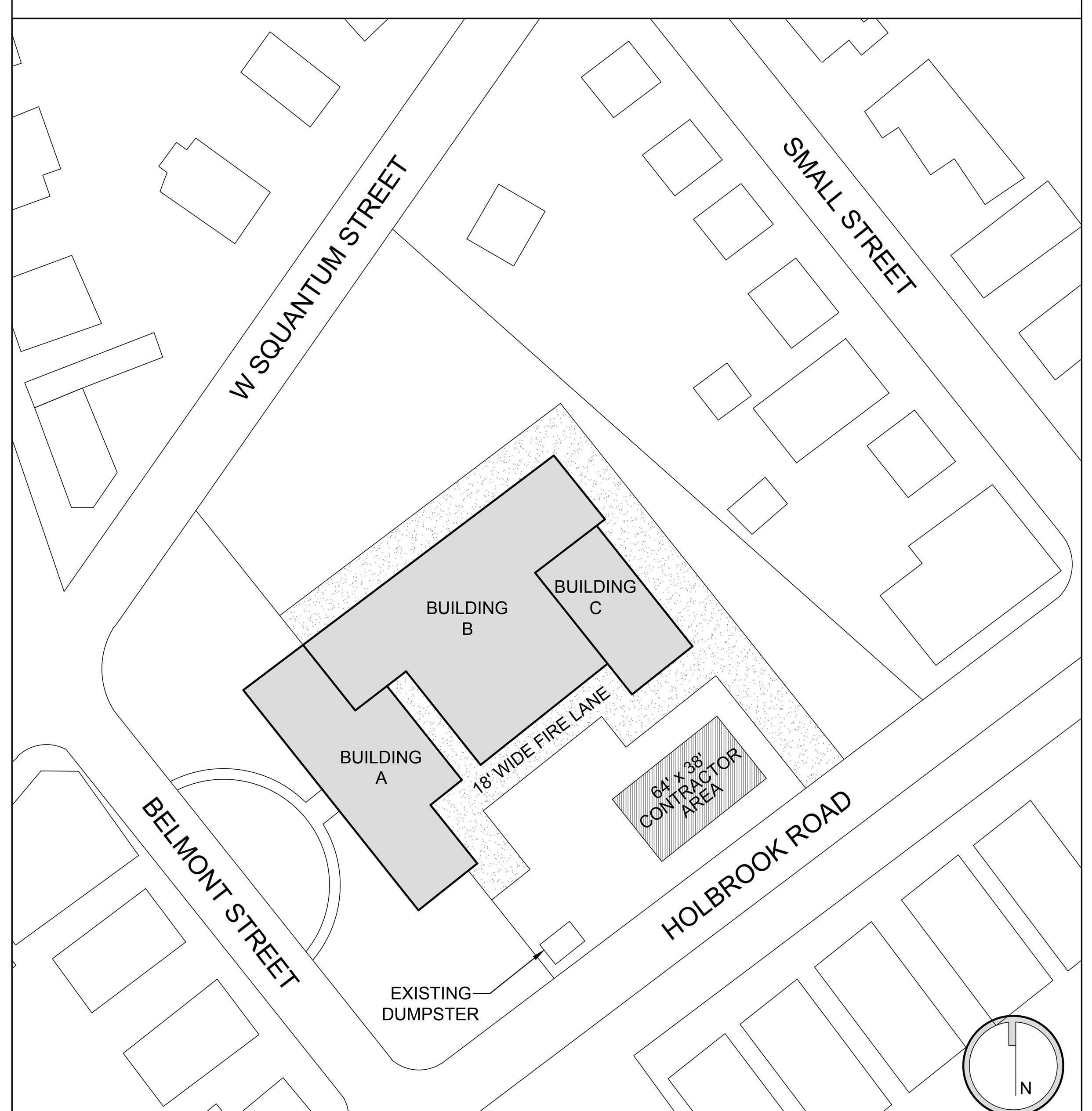

BUILDING A: ORIGINAL SCHOOL BUILDING (1912)
BUILDING B: FIRST SCHOOL ADDITION (1927)
BUILDING C: SECOND SCHOOL ADDITION

NOTE: BUILDINGS A AND B HAVE SIMILAR EXTERIOR WINDOW CONDITIONS, V.I.F.

DRAWING LIST

SHEET NUMBER	DRAWING TITLE	ISSUED FOR BID ___04/18/12	ADDENDUM 1 ___04/27/12	DRAWING & SKETCHES ISSUED DURING CONSTRUCTION
ARCHITECTURAL				
A-000	COVER SHEET	●	●	
A-001	GENERAL REFERENCE SHEET	●	●	
AD-201	DEMOLITION WINDOW ELEVATIONS	●		
AD-202	DEMOLITION WINDOW ELEVATIONS	●	●	
AD-203	DEMOLITION WINDOW ELEVATIONS	●		
A-201	NEW WINDOW ELEVATIONS	●	●	
A-202	NEW WINDOW ELEVATIONS	●	●	
A-203	NEW WINDOW ELEVATIONS	●	●	
A-501	SINGLE HUNG WINDOW DETAILS	●	●	
A-502	SINGLE HUNG WINDOW DETAILS	●	●	
A-503	FIXED WINDOW DETAILS	●	●	
A-504	FIXED WINDOW DETAILS	●	●	
A-505	WINDOW DETAILS	●	●	
A-601	WINDOW TYPES AND SCHEDULE	●	●	

WESSLING ARCHITECTS
AIA-CSI-BOCA

PRESIDENTS PLACE, 1250 HANCOCK STREET, SUITE 815N
QUINCY, MA 02169 TEL. 617-773-8150 FAX 617-773-4902
www.wesslingarchitects.com

CONSULTANTS:

PROJECT:

MONTCLAIR ELEMENTARY WINDOW REPLACEMENT

8 BELMONT STREET
QUINCY, MA

CLIENT:

THE CITY OF QUINCY

QUINCY, MA

NOT FOR CONSTRUCTION

PROFESSIONAL

PREPARED BY A LICENSED ARCHITECT
Any changes to this item can be a violation of the law unless altered by a licensed architect. Any alteration made to this item must be accompanied by a specific description of change or changes made; date change was made, as well as the seal of the licensed architect who made or oversaw the changes.

MARK	DATE	DESCRIPTION
1	04/27/12	ADDENDUM 1
	04/18/12	ISSUED FOR BID

ISSUE:

PROJECT NO.:	12060
DRAWN BY:	CJG
CHECKED BY:	PM
DRAWING SCALE:	N.T.S.

SHEET TITLE:

GENERAL REFERENCE SHEET

SHEET:

A-001

DO NOT SCALE DRAWING

COPYRIGHT © STEPHEN J WESSLING ARCHITECTS INC. 2012

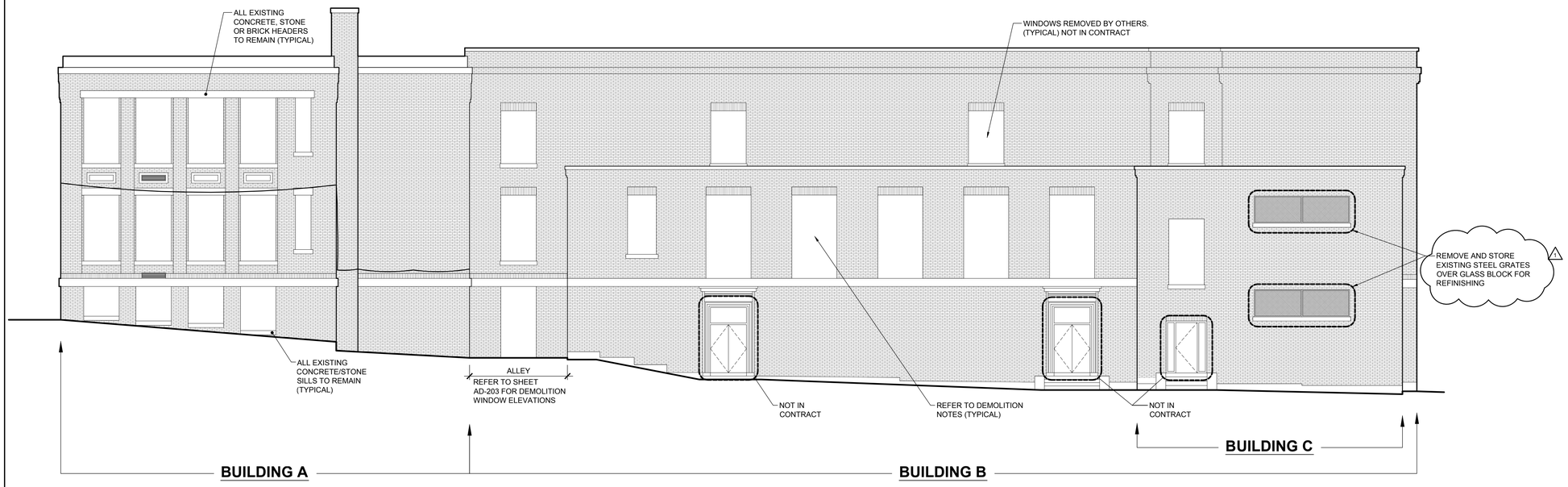

1 AD-202 DEMO HOLBROOK ROAD ELEVATION
SCALE: 1/8"=1'-0"

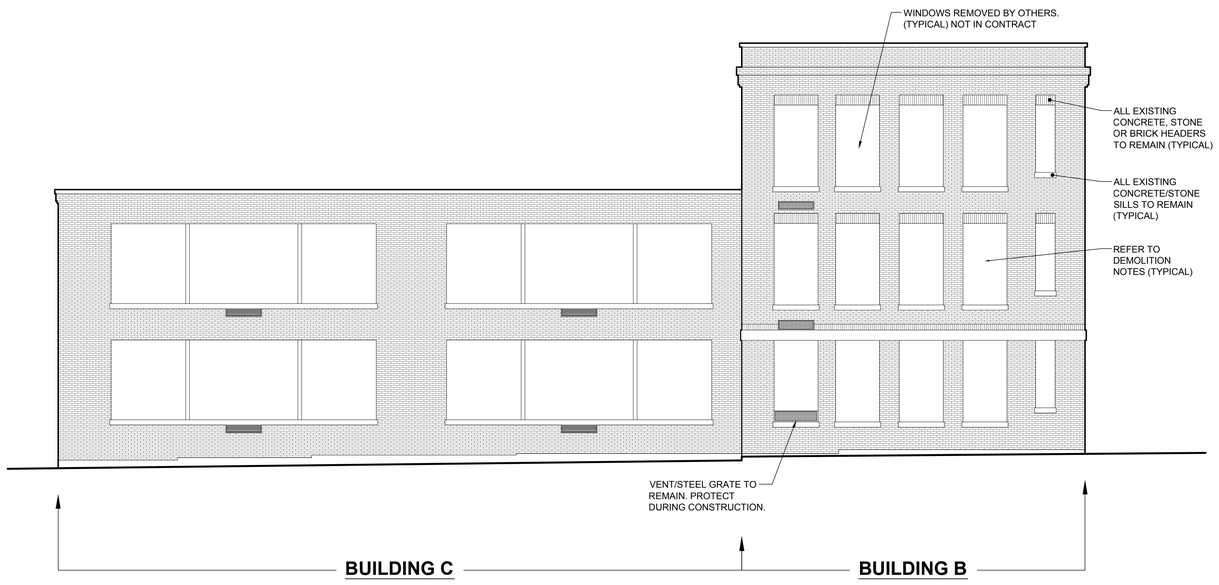

2 AD-202 DEMO NORTH EAST ELEVATION
SCALE: 1/8"=1'-0"

DEMOLTION NOTES

- EXISTING WOOD WINDOW FRAMES EXPOSED FROM ALUMINUM WINDOW REMOVAL TO REMAIN AS BLOCKING FOR NEW WINDOW INSTALLATION. REMOVE AND REPLACE ANY DAMAGED BLOCKING AS NECESSARY.

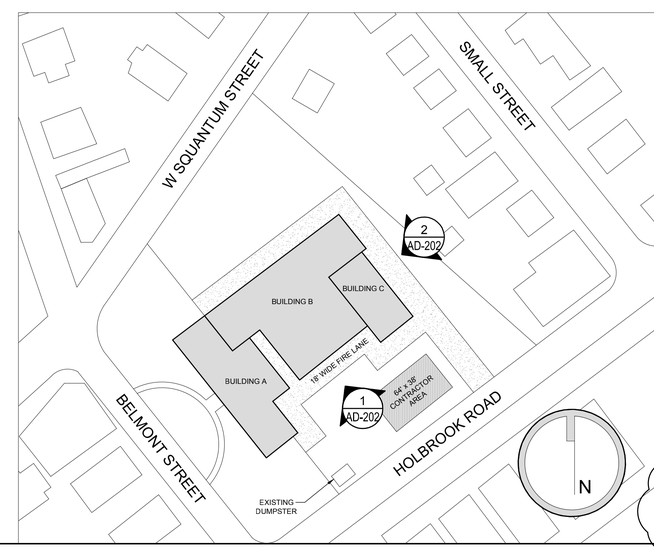

WESSLING ARCHITECTS
AIA-CSI-BOCA
PRESIDENTS PLACE, 1250 HANCOCK STREET, SUITE 815N
QUINCY, MA 02169 TEL. 617-773-8150 FAX 617-773-4902
www.wesslingarchitects.com

CONSULTANTS:

PROJECT:

MONTCLAIR ELEMENTARY WINDOW REPLACEMENT

8 BELMONT STREET
QUINCY, MA

CLIENT:

THE CITY OF QUINCY

QUINCY, MA

NOT FOR CONSTRUCTION

PROFESSIONAL

PREPARED BY A LICENSED ARCHITECT
Any changes to this item can be a violation of the law unless altered by a licensed architect. Any alteration made to this item must be accompanied by a specific description of change or changes made; date change was made, as well as the seal of the licensed architect who made or oversaw the changes.

MARK	DATE	DESCRIPTION
1	04/27/12	ADDENDUM 1
	04/18/12	ISSUED FOR BID

ISSUE:

PROJECT NO.:	12060
DRAWN BY:	CJG
CHECKED BY:	PM
DRAWING SCALE:	AS NOTED

SHEET TITLE:

DEMOLITION WINDOW ELEVATIONS

1

SHEET:

AD-202

DO NOT SCALE DRAWING

COPYRIGHT © STEPHEN J WESSLING ARCHITECTS INC. 2012

Drawing name is J:\12060\12060 MontClair Elementary School Windows\Autocad\Addendum 1\12060 A-201_A-202_A-203_AD-202_A1.dwg
Apr 27, 2012 - 13:06pm
Xref J:_SJW2012\12060 MontClair Elementary School Windows\Autocad\Block\12060 ARCH D 24x36 Title Block 2012 - Window Replacement (2).dwg

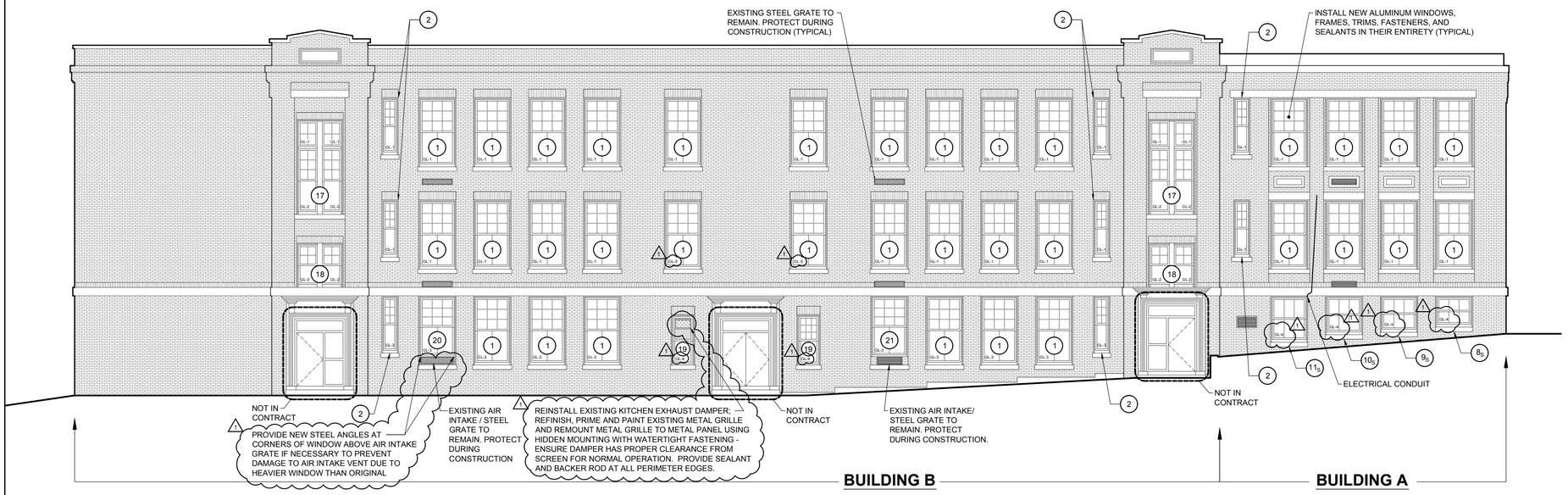

1 A-201 NEW W. SQUANTUM STREET ELEVATION
SCALE: 1/8"=1'-0"

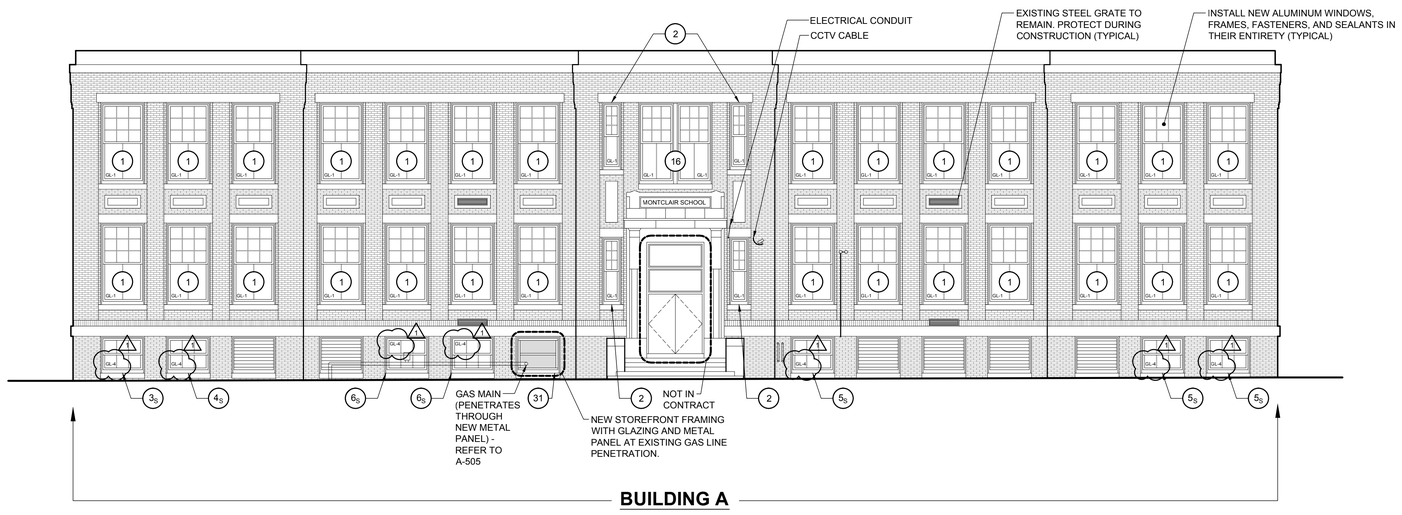

2 A-201 NEW BELMONT STREET ELEVATION
SCALE: 1/8"=1'-0"

SYMBOL KEY

(#) = WINDOW TYPE; REFER TO SHEET A-601 FOR WINDOW TYPES AND SCHEDULE.
GL - # REFERS TO GLAZING TYPE. REFER TO SPECIFICATIONS.
SUBSCRIPT "S" REFERS TO NEW WINDOW SCREEN

INSTALLATION NOTES

- INSTALL NEW ALUMINUM WINDOWS, WINDOW FRAMES, GLAZING AND METAL PANELS.
- INSTALL NEW WINDOW SEALANTS.
- INSTALL NEW BLOCKING AS NECESSARY WHERE EXISTING BLOCKING HAS BEEN DAMAGED DUE TO REMOVAL OF PREVIOUSLY EXISTING ALUMINUM WINDOWS.
- REINSTALL INTERIOR WOOD WINDOW TRIM AS NECESSARY.

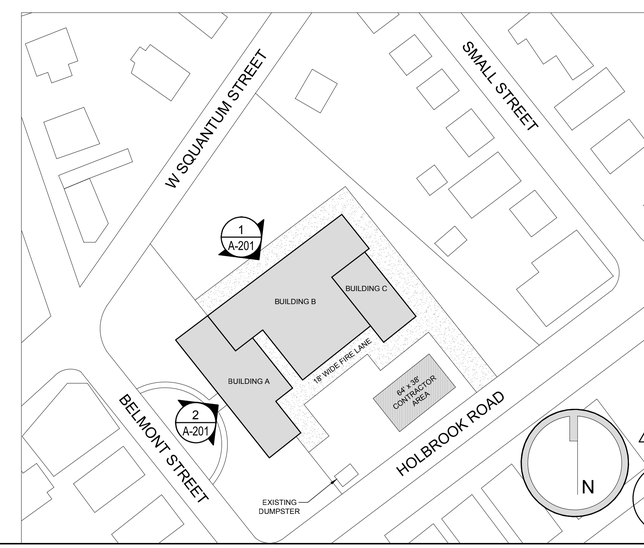

WESSLING ARCHITECTS
AIA-CSI-BOCA
PRESIDENTS PLACE, 1250 HANCOCK STREET, SUITE 815N
QUINCY, MA 02169 TEL. 617-773-8150 FAX 617-773-4902
www.wesslingarchitects.com

CONSULTANTS:

PROJECT:

MONTCLAIR ELEMENTARY WINDOW REPLACEMENT

8 BELMONT STREET
QUINCY, MA

CLIENT:

THE CITY OF QUINCY

QUINCY, MA

NOT FOR CONSTRUCTION

PROFESSIONAL

PREPARED BY A LICENSED ARCHITECT
Any changes to this item can be a violation of the law unless altered by a licensed architect. Any alteration made to this item must be accompanied by a specific description of change or changes made; date change was made, as well as the seal of the licensed architect who made or oversaw the changes.

MARK	DATE	DESCRIPTION
1	04/27/12	ADDENDUM 1
	04/18/12	ISSUED FOR BID

ISSUE:

PROJECT NO.:	12060
DRAWN BY:	CJG
CHECKED BY:	PM
DRAWING SCALE:	AS NOTED

SHEET TITLE:

NEW WINDOW ELEVATIONS

SHEET:

A-201

DO NOT SCALE DRAWING

COPYRIGHT©STEPHEN J WESSLING ARCHITECTS INC. 2012

Drawing name is J:\12060\12060 Montclair Elementary School Windows\Autocad\Addendum 1\12060 A-201_A-202_A-203_A0-202_A1.dwg
Apr 27, 2012 - 13:50pm
Xref: J:_SA\2012\12060 Montclair Elementary School Windows\Autocad\Block\12060 ARCH D 24x36 Title Block 2012 - Window Replacement (2).dwg

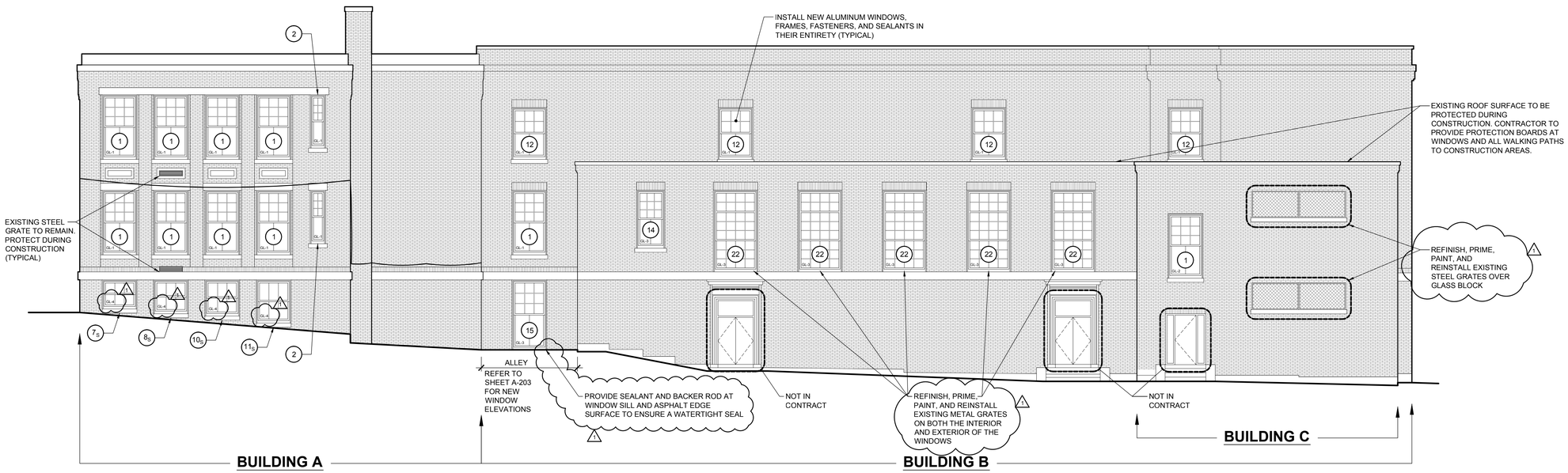

1 A-202 NEW HOLBROOK ROAD ELEVATION
SCALE: 1/8"=1'-0"

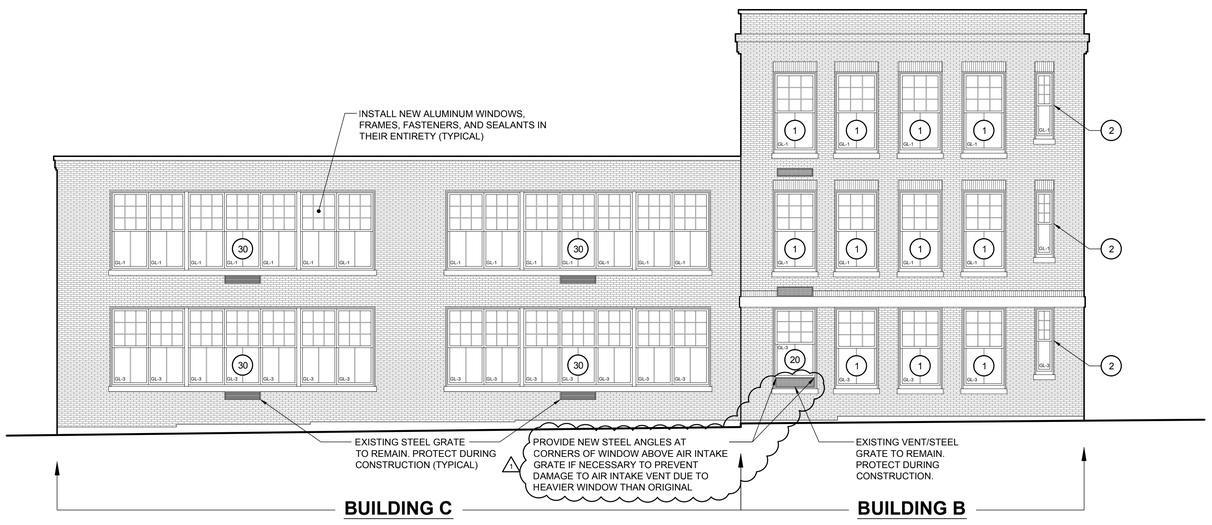

2 A-202 NEW NORTH EAST ELEVATION
SCALE: 1/8"=1'-0"

SYMBOL KEY

(#) = WINDOW TYPE; REFER TO SHEET A-601 FOR WINDOW TYPES AND SCHEDULE.
GL - # REFERS TO GLAZING TYPE. REFER TO SPECIFICATIONS.
SUBSCRIPT "S" REFERS TO NEW WINDOW SCREEN

INSTALLATION NOTES

- INSTALL NEW ALUMINUM WINDOWS, WINDOW FRAMES, GLAZING AND METAL PANELS.
- INSTALL NEW WINDOW SEALANTS.
- INSTALL NEW BLOCKING AS NECESSARY WHERE EXISTING BLOCKING HAS BEEN DAMAGED DUE TO REMOVAL OF PREVIOUSLY EXISTING ALUMINUM WINDOWS.
- REINSTALL INTERIOR WOOD WINDOW TRIM AS NECESSARY.

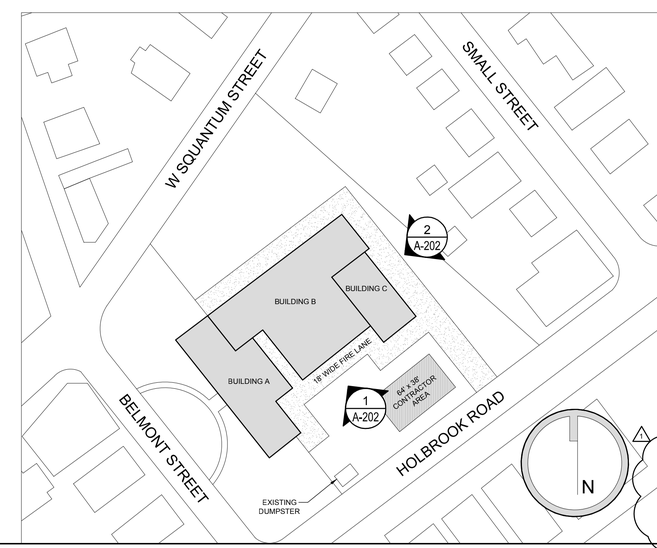

WESSLING ARCHITECTS
AIA-CSI-BOCA
PRESIDENTS PLACE, 1250 HANCOCK STREET, SUITE 815N
QUINCY, MA 02169 TEL. 617-773-8150 FAX 617-773-4902
www.wesslingarchitects.com

CONSULTANTS:

PROJECT:

MONTCLAIR ELEMENTARY WINDOW REPLACEMENT

8 BELMONT STREET
QUINCY, MA

CLIENT:

THE CITY OF QUINCY

QUINCY, MA

NOT FOR CONSTRUCTION

PROFESSIONAL

PREPARED BY A LICENSED ARCHITECT
Any changes to this item can be a violation of the law unless altered by a licensed architect. Any alteration made to this item must be accompanied by a specific description of change or changes made; date change was made, as well as the seal of the licensed architect who made or oversaw the changes.

MARK	DATE	DESCRIPTION
1	04/27/12	ADDENDUM 1
	04/18/12	ISSUED FOR BID

ISSUE:

PROJECT NO.:	12060
DRAWN BY:	CJG
CHECKED BY:	PM
DRAWING SCALE:	AS NOTED

SHEET TITLE:

NEW WINDOW ELEVATIONS

SHEET:

A-202

DO NOT SCALE DRAWING

COPYRIGHT© STEPHEN J WESSLING ARCHITECTS INC. 2012

Drawing name is J:\2012\12060 MontClair Elementary School Windows\AutoCad\Addendum 1\12060 A-201_A-202_A-203_A0-202_A1.dwg
Apr 27, 2012 - 13:51pm
Xref J:_SA\2012\12060 MontClair Elementary School Windows\AutoCad\Block\12060 ARCH\D 24x36 Title Block 2012 - Window Replacement (2).dwg

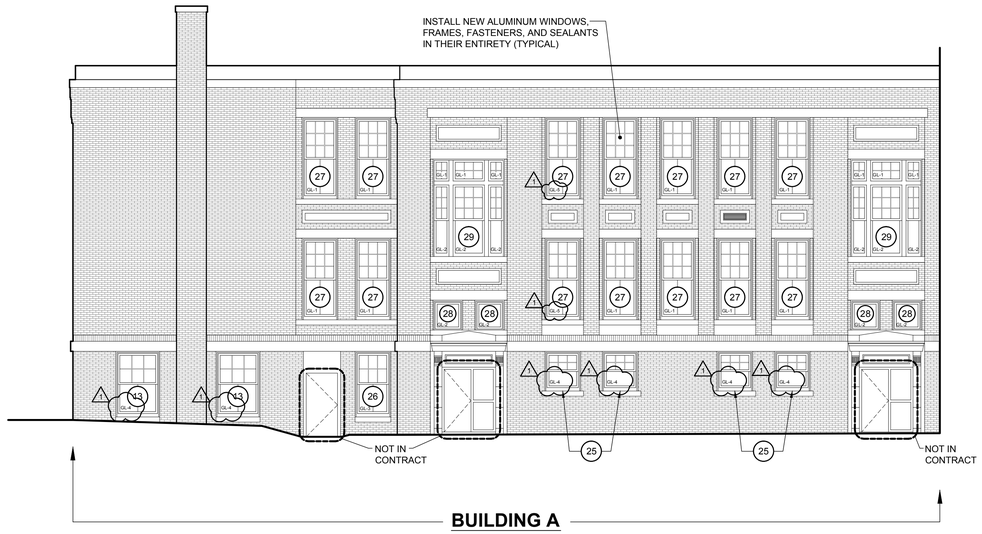

2 A-203 NEW NORTH EAST ALLEY ELEVATION
SCALE: 1/8"=1'-0"

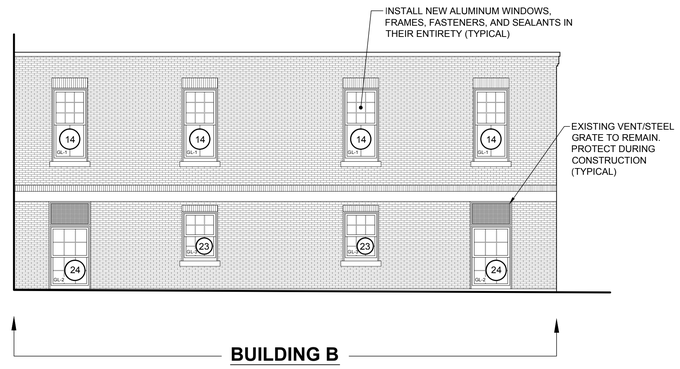

1 A-203 NEW SOUTH WEST ALLEY ELEVATION
SCALE: 1/8"=1'-0"

SYMBOL KEY

(#) = WINDOW TYPE; REFER TO SHEET A-601 FOR WINDOW TYPES AND SCHEDULE.
GL - # REFERS TO GLAZING TYPE. REFER TO SPECIFICATIONS.
SUBSCRIPT "S" REFERS TO NEW WINDOW SCREEN

INSTALLATION NOTES

- INSTALL NEW ALUMINUM WINDOWS, WINDOW FRAMES, GLAZING AND METAL PANELS.
- INSTALL NEW WINDOW SEALANTS.
- INSTALL NEW BLOCKING AS NECESSARY WHERE EXISTING BLOCKING HAS BEEN DAMAGED DUE TO REMOVAL OF PREVIOUSLY EXISTING ALUMINUM WINDOWS.
- REINSTALL INTERIOR WOOD WINDOW TRIM AS NECESSARY.

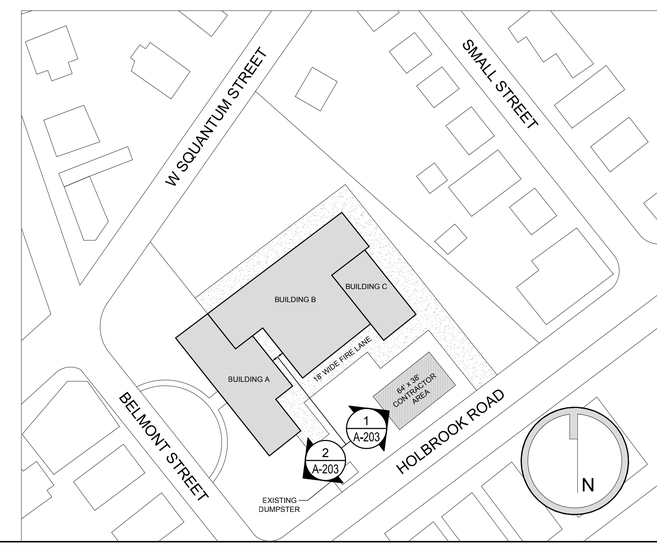

WESSLING ARCHITECTS
AIA-CSI-BOCA
PRESIDENTS PLACE, 1250 HANCOCK STREET, SUITE 815N
QUINCY, MA 02169 TEL. 617-773-8150 FAX 617-773-4902
www.wesslingarchitects.com

CONSULTANTS:

PROJECT:

MONTCLAIR ELEMENTARY WINDOW REPLACEMENT

8 BELMONT STREET
QUINCY, MA

CLIENT:

THE CITY OF QUINCY

QUINCY, MA

NOT FOR CONSTRUCTION

PROFESSIONAL

PREPARED BY A LICENSED ARCHITECT
Any changes to this item can be a violation of the law unless altered by a licensed architect. Any alteration made to this item must be accompanied by a specific description of change or changes made; date change was made, as well as the seal of the licensed architect who made or oversaw the changes.

MARK	DATE	DESCRIPTION
1	04/27/12	ADDENDUM 1
	04/18/12	ISSUED FOR BID

ISSUE:

PROJECT NO.:	12060
DRAWN BY:	CJG
CHECKED BY:	PM
DRAWING SCALE:	AS NOTED

SHEET TITLE:

NEW WINDOW ELEVATIONS

SHEET:

A-203

DO NOT SCALE DRAWING

COPYRIGHT©STEPHEN J WESSLING ARCHITECTS INC. 2012

Drawing name is J:\2012\12060 MontClair Elementary School Windows\Autocad\Addendum 1\12060 A-201_A-202_A-203_AD-202_A1.dwg
Apr 27, 2012 - 13:51pm
Xref J:_SJW2012\12060 MontClair Elementary School Windows\Autocad\Block\12060 ARCH-D 24x36 Title Block 2012 - Window Replacement (2).dwg

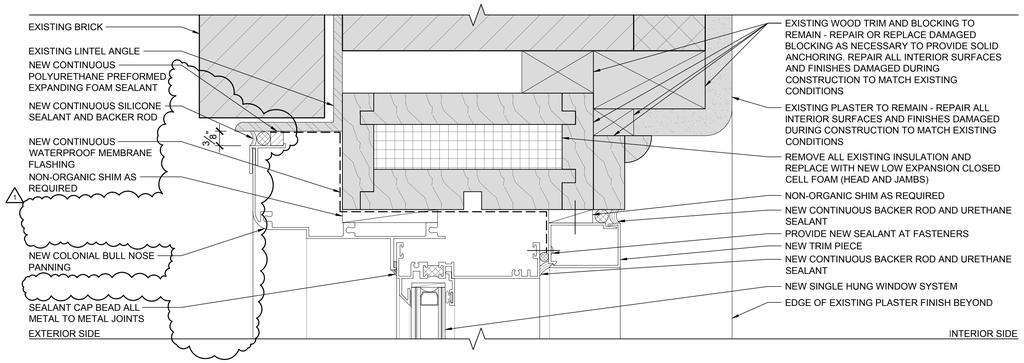

6 A-501 TYPICAL SINGLE HUNG WINDOW HEAD DETAIL @ BRICK

SCALE: 6"=1'-0"

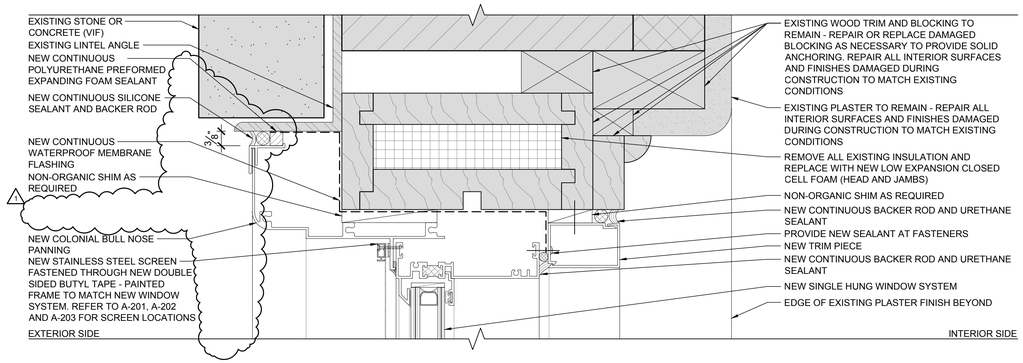

3 A-501 TYPICAL SINGLE HUNG WINDOW HEAD DETAIL @ STONE

SCALE: 6"=1'-0"

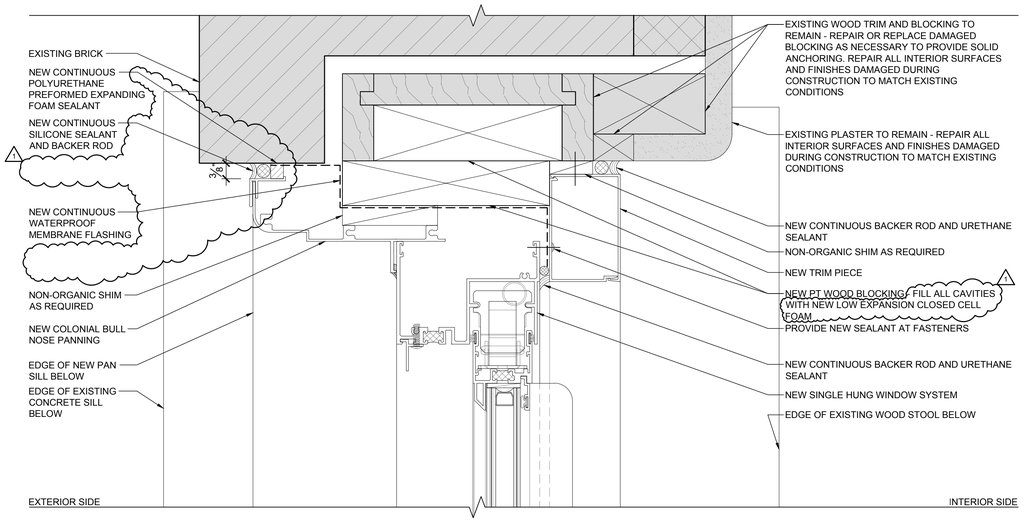

5 A-501 SINGLE HUNG WINDOW LOWER JAMB DETAIL

SCALE: 6"=1'-0"

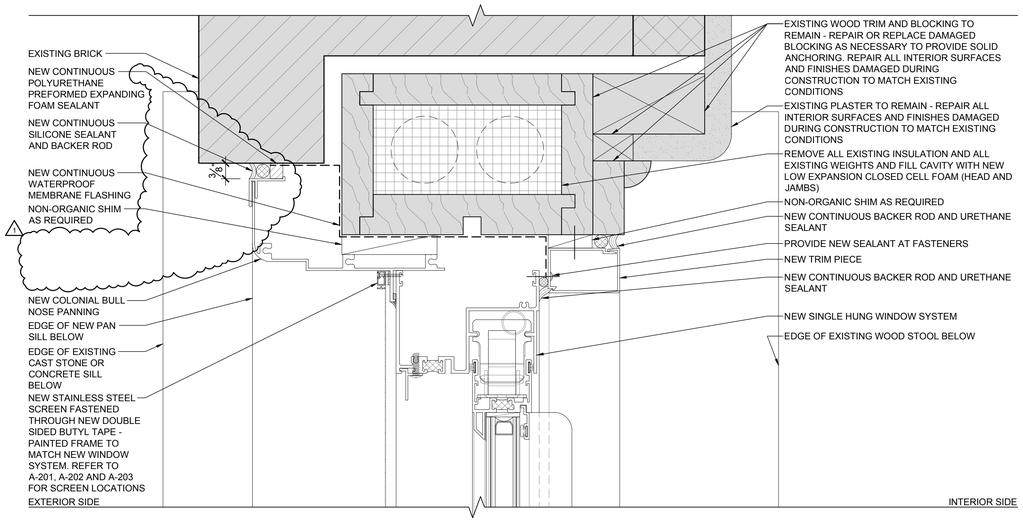

2 A-501 TYPICAL SINGLE HUNG WINDOW LOWER JAMB DETAIL

SCALE: 6"=1'-0"

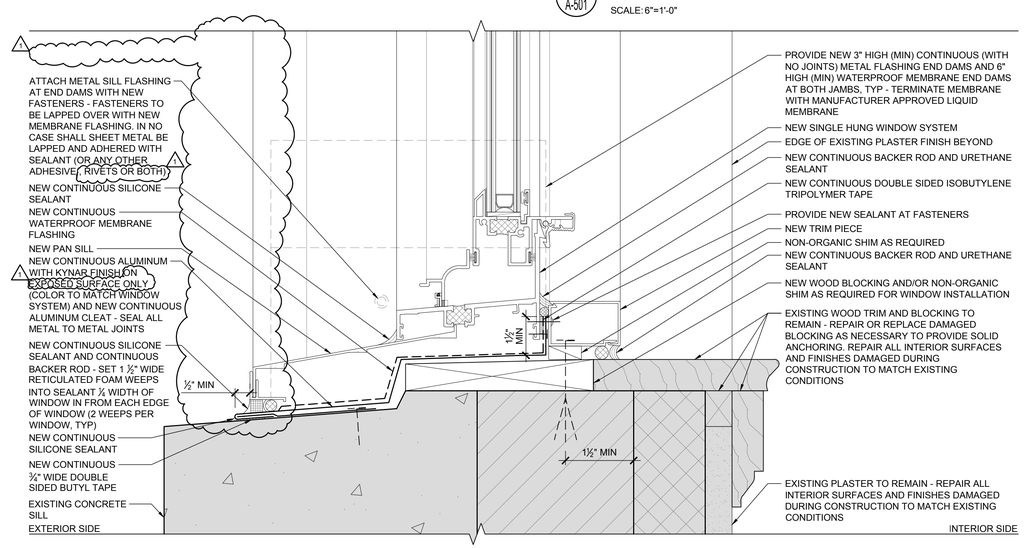

4 A-501 SINGLE HUNG WINDOW SILL DETAIL

SCALE: 6"=1'-0"

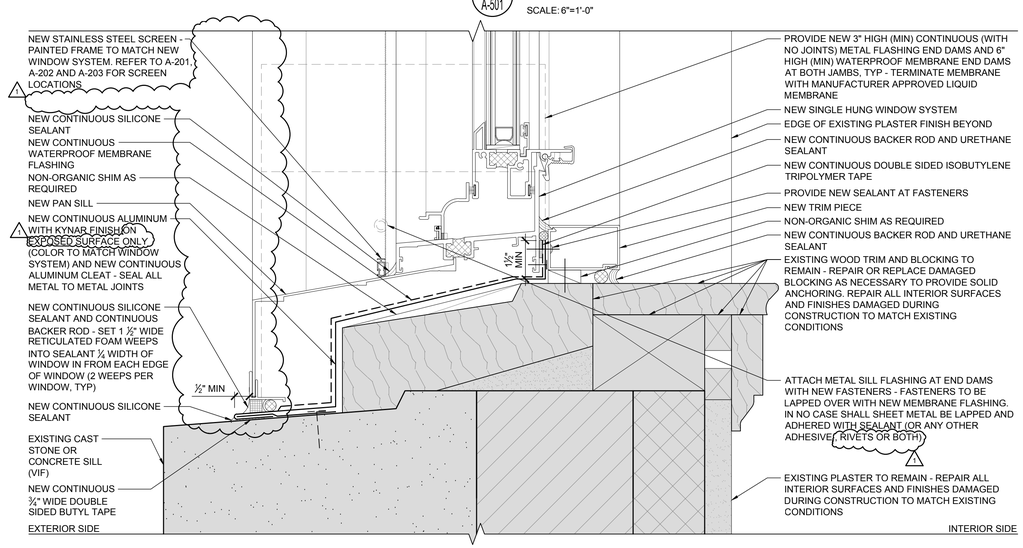

1 A-501 TYPICAL SINGLE HUNG WINDOW SILL DETAIL

SCALE: 6"=1'-0"

WESSLING ARCHITECTS
AIA-CSI-BOCA
PRESIDENTS PLACE, 1250 HANCOCK STREET, SUITE 815N
QUINCY, MA 02169 TEL. 617-773-8150 FAX 617-773-4902
www.wesslingarchitects.com

CONSULTANTS:

PROJECT:

MONTCLAIR ELEMENTARY WINDOW REPLACEMENT

8 BELMONT STREET
QUINCY, MA

CLIENT:

THE CITY OF QUINCY

QUINCY, MA

NOT FOR CONSTRUCTION

PROFESSIONAL

PREPARED BY A LICENSED ARCHITECT

Any changes to this item can be a violation of the law unless altered by a licensed architect. Any alteration made to this item must be accompanied by a specific description of change or changes made; date change was made, as well as the seal of the licensed architect who made or oversaw the changes.

MARK	DATE	DESCRIPTION
1	04/27/12	ADDENDUM 1
	04/18/12	ISSUED FOR BID

ISSUE:

PROJECT NO.:	12060
DRAWN BY:	DN
CHECKED BY:	PM
DRAWING SCALE:	6" = 1'-0"

SHEET TITLE:

SINGLE HUNG WINDOW DETAILS

SHEET:

A-501

DO NOT SCALE DRAWING

COPYRIGHT © STEPHEN J WESSLING ARCHITECTS INC. 2012

Drawing name: U:_SJW2012\12060 Montclair Elementary School Windows\Autocad\Addendum 1\12060_A-501_A1.dwg
Apr 22, 2012 - 12:30pm
Xref: J:_SJW2012\12060 Montclair Elementary School Windows\Autocad\Blocks\12060_ARCH D 24x36 Title Block 2012 - Window Replacement (2).dwg

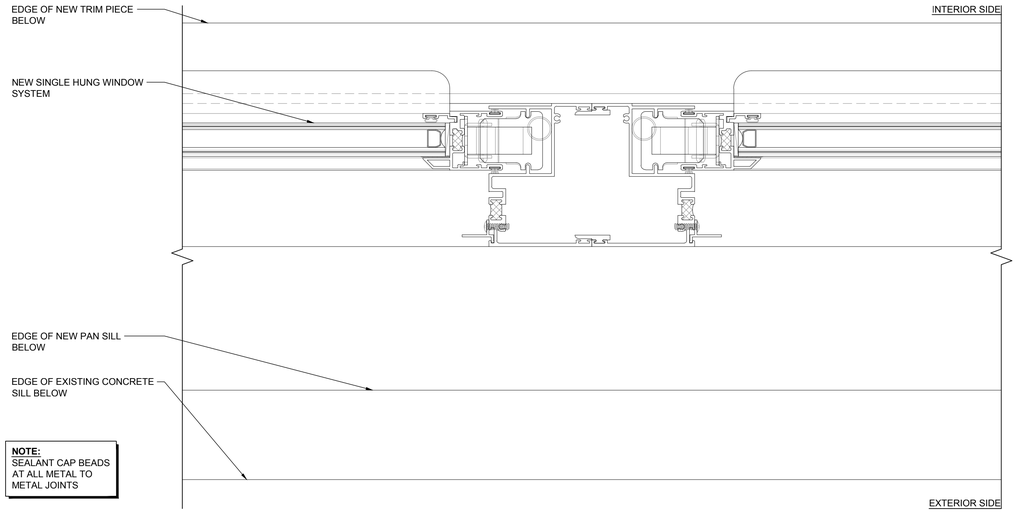

NOTE:
SEALANT CAP BEADS AT ALL METAL TO METAL JOINTS

5 A-502 SINGLE HUNG WINDOW LOWER VERTICAL BUTT JOINT DETAIL

SCALE: 6"=1'-0"

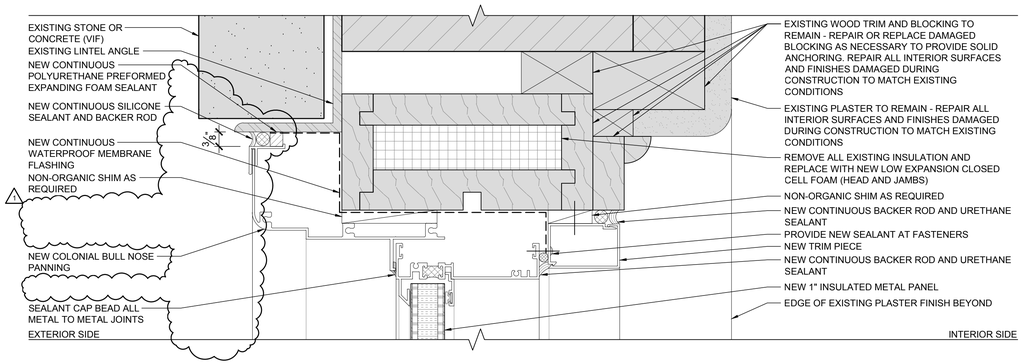

3 A-502 METAL PANEL HEAD DETAIL

SCALE: 6"=1'-0"

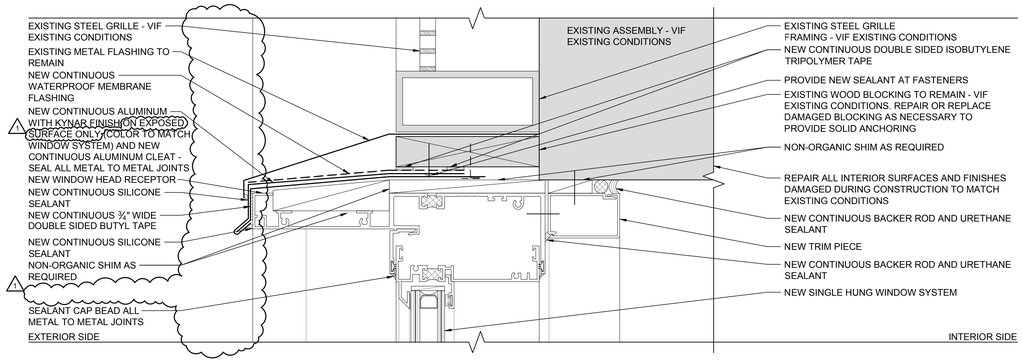

2 A-502 SINGLE HUNG WINDOW HEAD DETAIL @ EXISTING STEEL GRILLE

SCALE: 6"=1'-0"

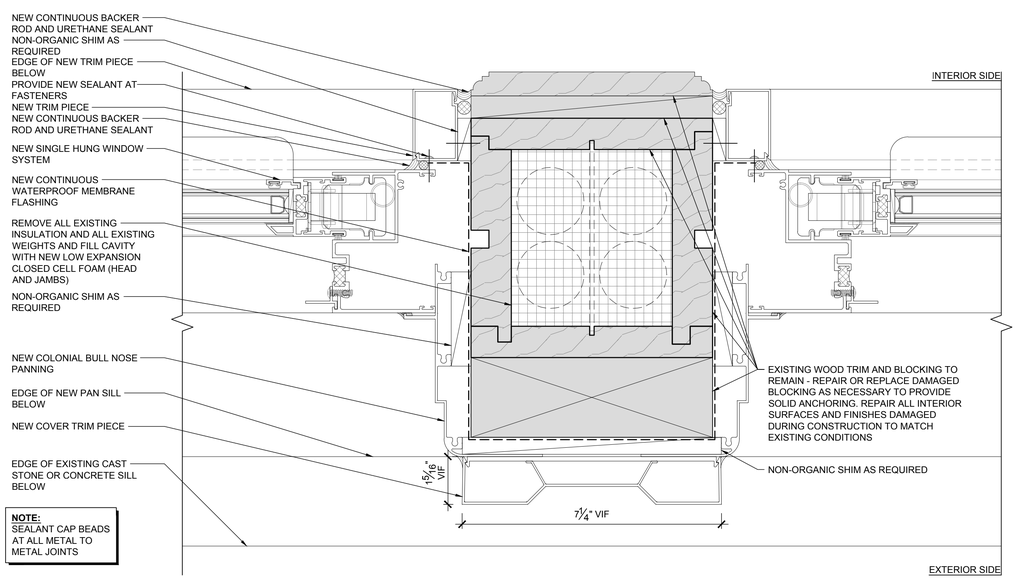

NOTE:
SEALANT CAP BEADS AT ALL METAL TO METAL JOINTS

4 A-502 TYPICAL SINGLE HUNG WINDOW LOWER VERTICAL MULLION DETAIL

SCALE: 6"=1'-0"

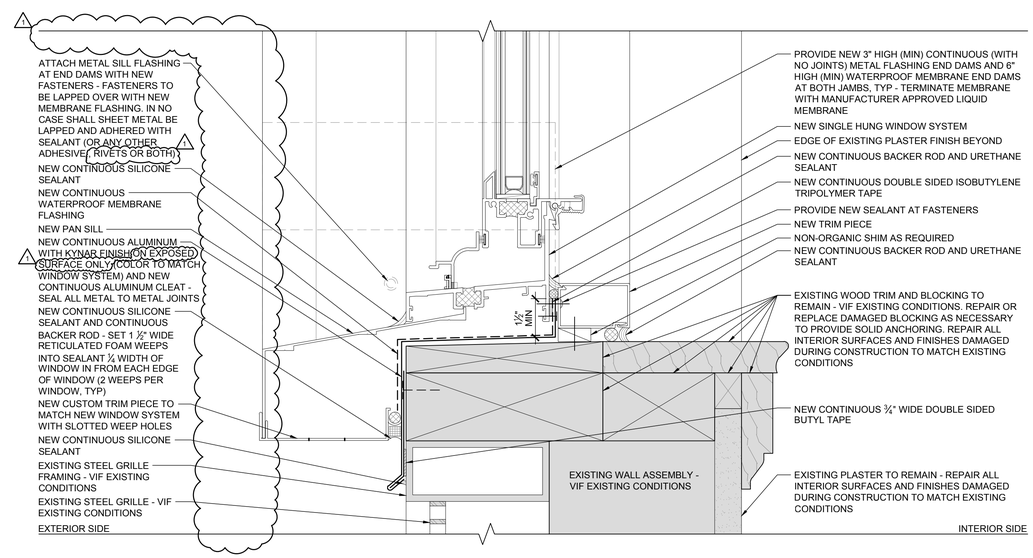

1 A-502 SINGLE HUNG WINDOW SILL DETAIL @ EXISTING STEEL GRILLE

SCALE: 6"=1'-0"

WESSLING ARCHITECTS
AIA-CSI-BOCA
PRESIDENTS PLACE, 1250 HANCOCK STREET, SUITE 815N
QUINCY, MA 02169 TEL. 617-773-8150 FAX 617-773-4902
www.wesslingarchitects.com

CONSULTANTS:

PROJECT:

MONTCLAIR ELEMENTARY WINDOW REPLACEMENT

8 BELMONT STREET
QUINCY, MA

CLIENT:

THE CITY OF QUINCY

QUINCY, MA

NOT FOR CONSTRUCTION

PROFESSIONAL

PREPARED BY A LICENSED ARCHITECT
Any changes to this item can be a violation of the law unless altered by a licensed architect. Any alteration made to this item must be accompanied by a specific description of change or changes made; date change was made, as well as the seal of the licensed architect who made or oversaw the changes.

MARK	DATE	DESCRIPTION
1	04/27/12	ADDENDUM 1
	04/18/12	ISSUED FOR BID

ISSUE:

PROJECT NO.:	12060
DRAWN BY:	DN
CHECKED BY:	PM
DRAWING SCALE:	6" = 1'-0"

SHEET TITLE:

SINGLE HUNG WINDOW DETAILS

SHEET:

A-502

DO NOT SCALE DRAWING

COPYRIGHT©STEPHEN J WESSLING ARCHITECTS INC. 2012

Drawing name: U:_SHARED\12\12060 MontClair Elementary School Windows\Autocad\Addendum 1\12060-A-501_A1.dwg
Apr 27, 2012 - 12:39pm
Xref: U:_SHARED\12\12060 MontClair Elementary School Windows\Autocad\Blocks\12060 ARCH-D 24x36 Title Block 2012 - Window Replacement (2).dwg

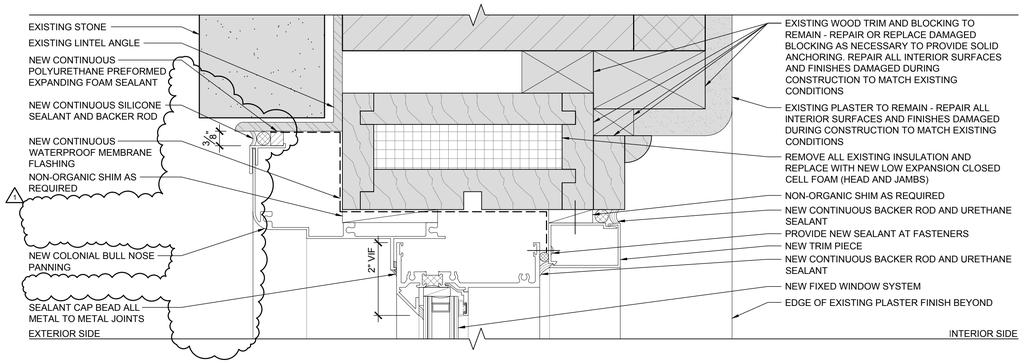

6 A-503 FIXED WINDOW HEAD DETAIL @ STONE

SCALE: 6"=1'-0"

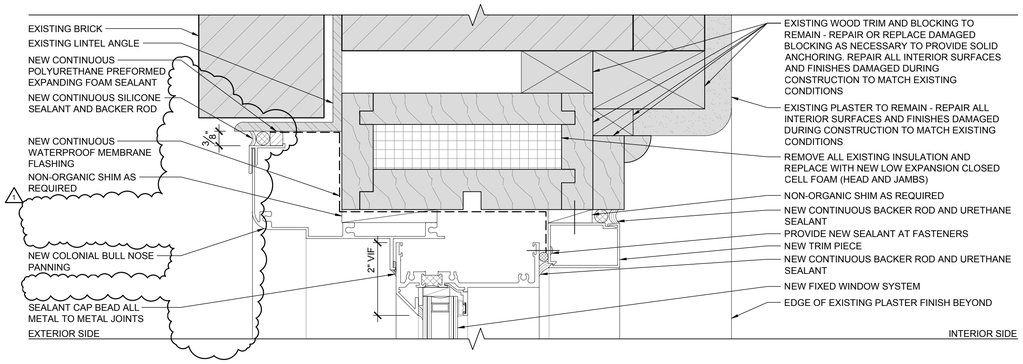

3 A-503 FIXED WINDOW HEAD DETAIL @ BRICK

SCALE: 6"=1'-0"

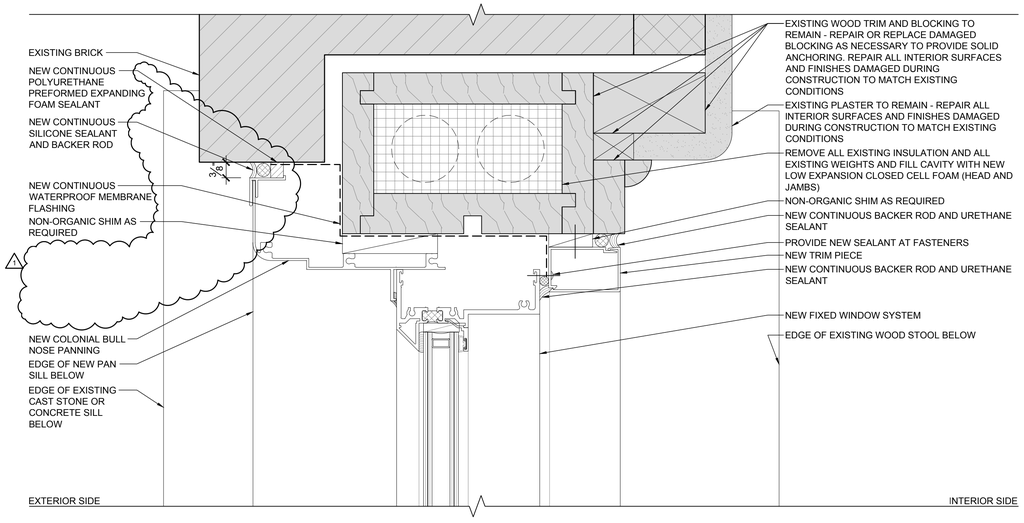

5 A-503 FIXED WINDOW UPPER JAMB DETAIL

SCALE: 6"=1'-0"

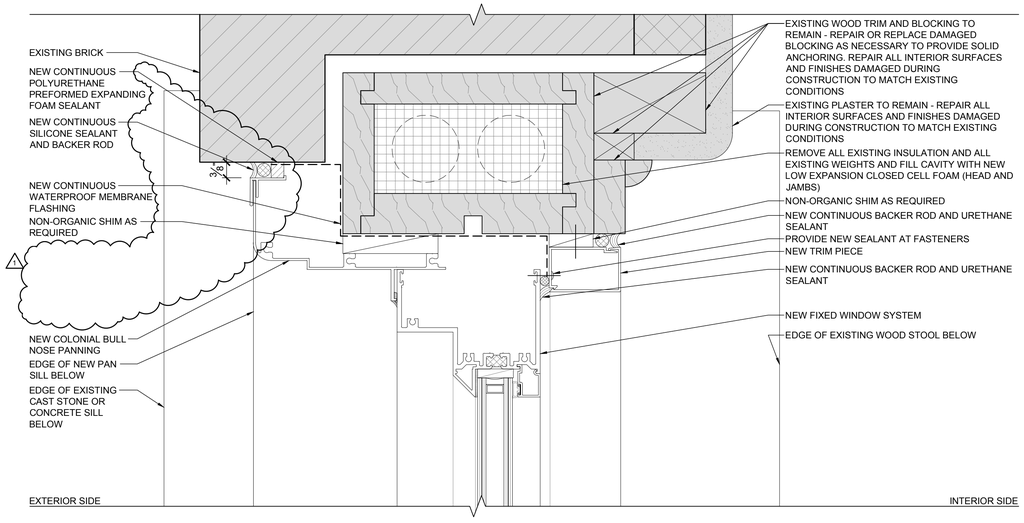

2 A-503 FIXED WINDOW LOWER JAMB DETAIL

SCALE: 6"=1'-0"

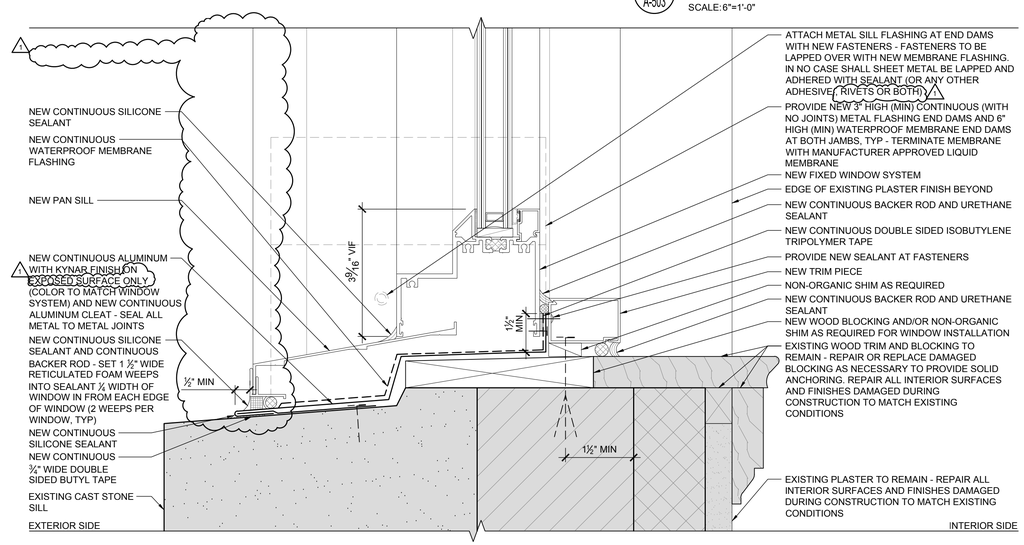

4 A-503 FIXED WINDOW SILL DETAIL

SCALE: 6"=1'-0"

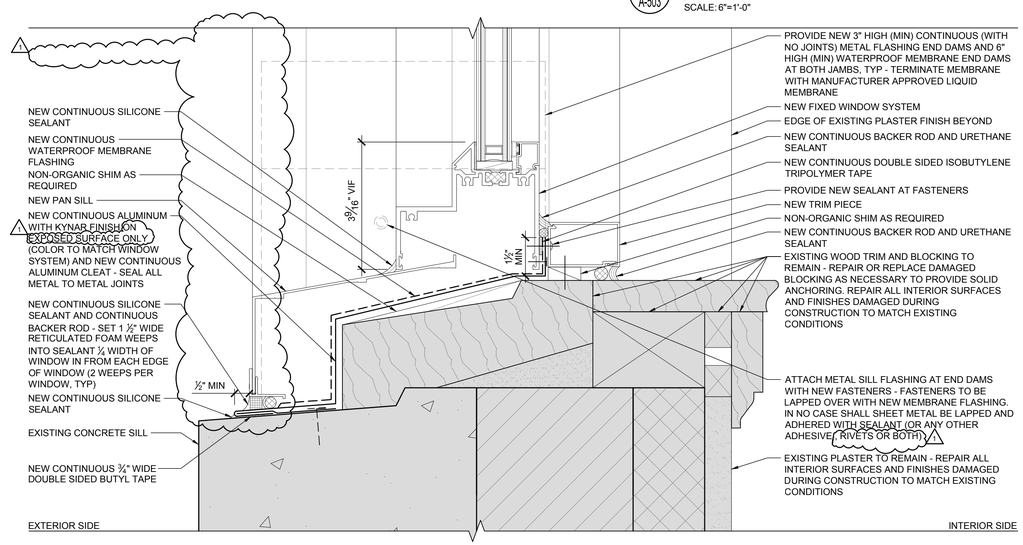

1 A-503 FIXED WINDOW SILL DETAIL

SCALE: 6"=1'-0"

WESSLING ARCHITECTS
AIA-CSI-BOCA
PRESIDENTS PLACE, 1250 HANCOCK STREET, SUITE 815N
QUINCY, MA 02169 TEL. 617-773-8150 FAX 617-773-4902
www.wesslingarchitects.com

CONSULTANTS:

PROJECT:

MONTCLAIR ELEMENTARY WINDOW REPLACEMENT

8 BELMONT STREET
QUINCY, MA

CLIENT:

THE CITY OF QUINCY

QUINCY, MA

NOT FOR CONSTRUCTION

PROFESSIONAL

PREPARED BY A LICENSED ARCHITECT
Any changes to this item can be a violation of the law unless altered by a licensed architect. Any alteration made to this item must be accompanied by a specific description of change or changes made; date change was made, as well as the seal of the licensed architect who made or oversaw the changes.

MARK	DATE	DESCRIPTION
1	04/27/12	ADDENDUM 1
	04/18/12	ISSUED FOR BID

ISSUE:

PROJECT NO.:	12060
DRAWN BY:	DN
CHECKED BY:	PM
DRAWING SCALE:	6" = 1'-0"

SHEET TITLE:

FIXED WINDOW DETAILS

SHEET:

A-503

DO NOT SCALE DRAWING

COPYRIGHT©STEPHEN J WESSLING ARCHITECTS INC. 2012

Drawing name: I:_SJW2012\12060 MontClair Elementary School Windows\Autocad\Addendum 1\12060-A-503_A1.dwg
Apr 27, 2012 - 12:42pm
Xref:J:_SJW2012\12060 MontClair Elementary School Windows\Autocad\Blocks\12060 ARCH-D 24x36 Title Block 2012 - Window Replacement (2).dwg

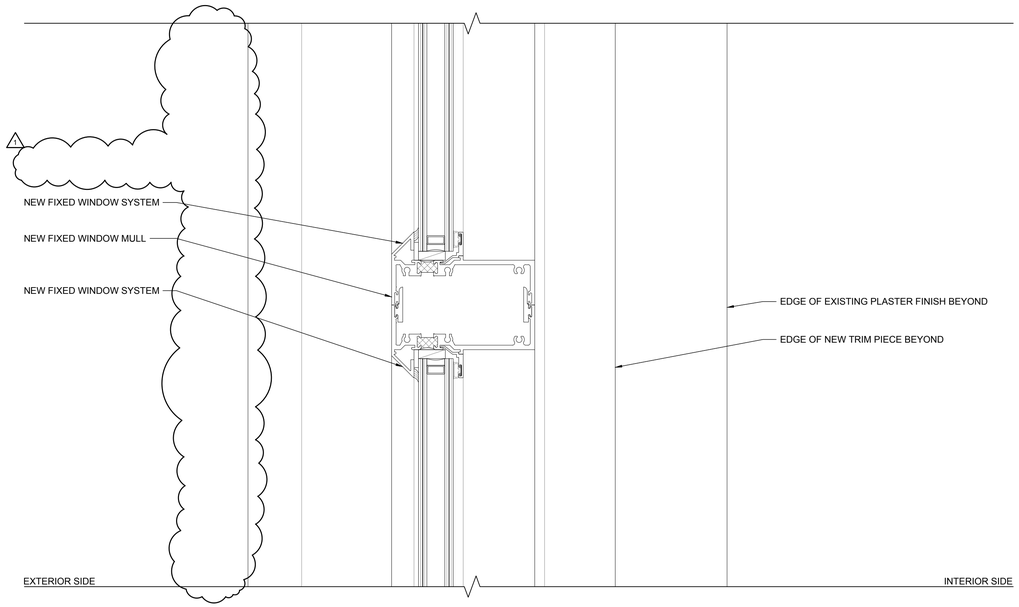

4 A-504 FIXED WINDOW HORIZONTAL MULLION DETAIL

SCALE: 6"=1'-0"

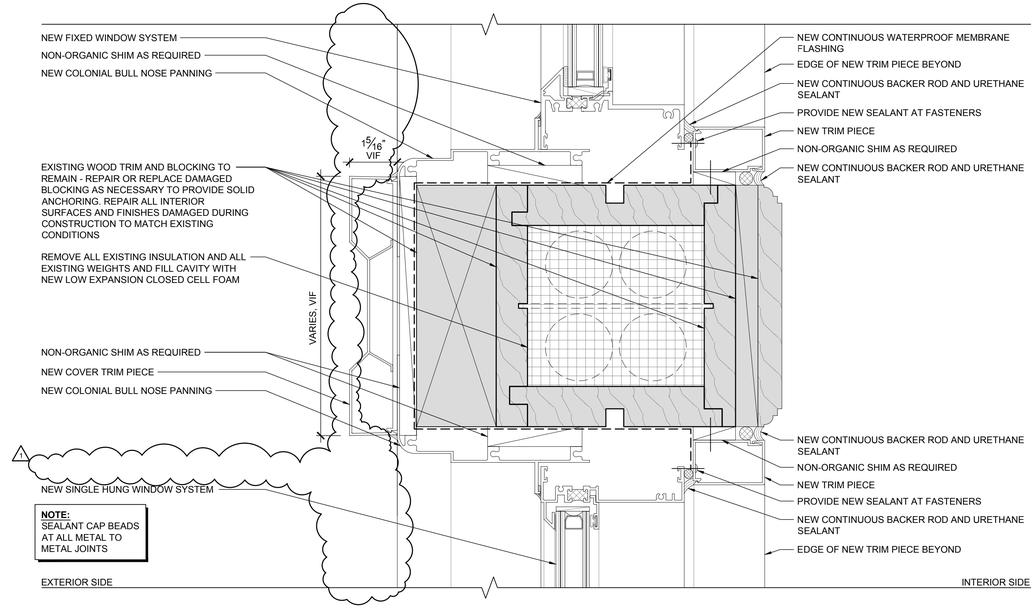

NOTE:
SEALANT CAP BEADS AT ALL METAL TO METAL JOINTS

2 A-504 FIXED WINDOW/SINGLE HUNG WINDOW HORIZONTAL MULLION DETAIL

SCALE: 6"=1'-0"

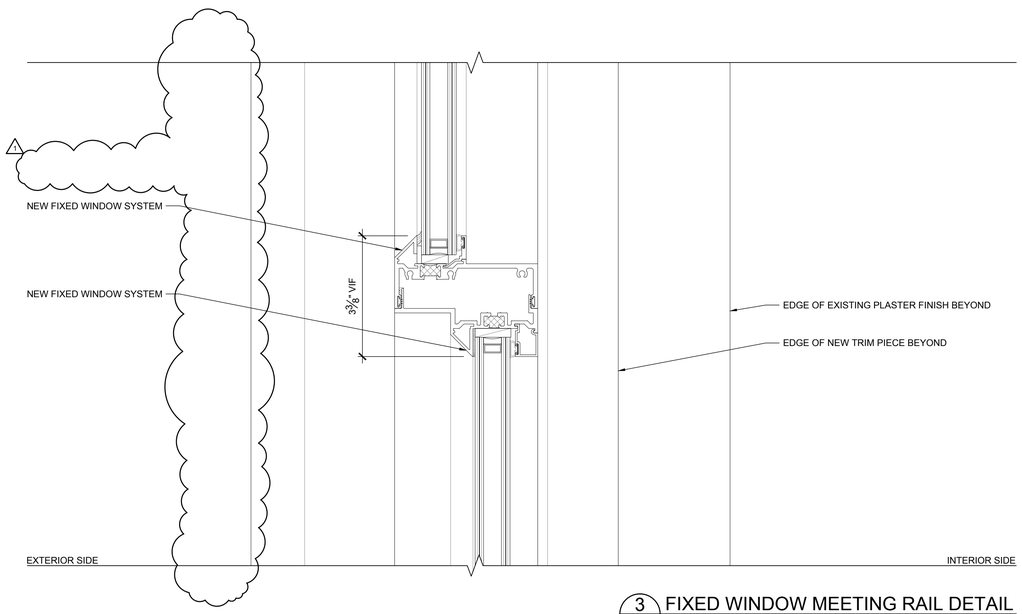

3 A-504 FIXED WINDOW MEETING RAIL DETAIL

SCALE: 6"=1'-0"

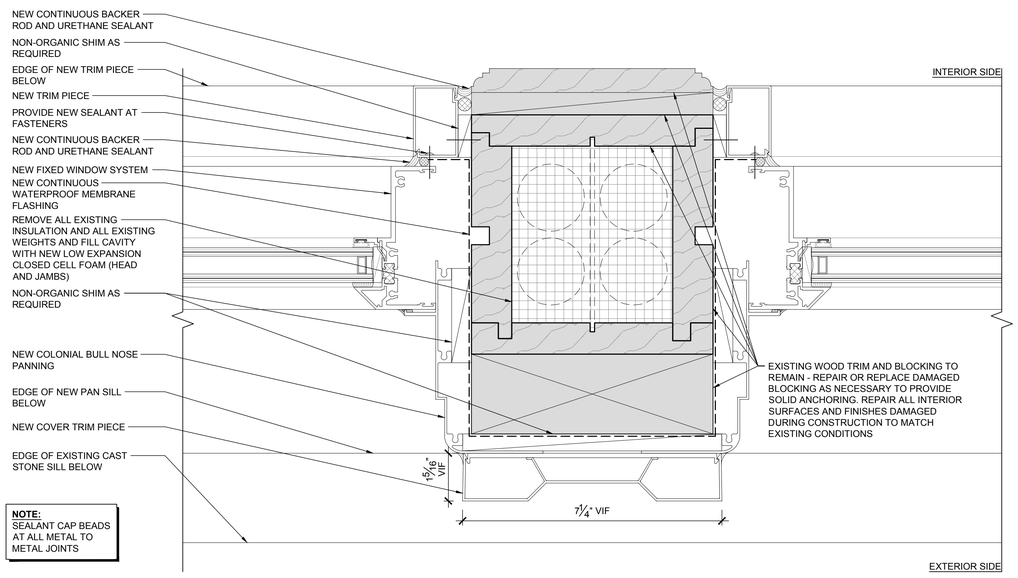

NOTE:
SEALANT CAP BEADS AT ALL METAL TO METAL JOINTS

1 A-504 FIXED WINDOW VERTICAL MULLION DETAIL

SCALE: 6"=1'-0"

WESSLING ARCHITECTS
AIA-CSI-BOCA
PRESIDENTS PLACE, 1250 HANCOCK STREET, SUITE 815N
QUINCY, MA 02169 TEL. 617-773-8150 FAX 617-773-4902
www.wesslingarchitects.com

CONSULTANTS:

PROJECT:

MONTCLAIR ELEMENTARY WINDOW REPLACEMENT

8 BELMONT STREET
QUINCY, MA

CLIENT:

THE CITY OF QUINCY

QUINCY, MA

NOT FOR CONSTRUCTION

PROFESSIONAL

PREPARED BY A LICENSED ARCHITECT
Any changes to this item can be a violation of the law unless altered by a licensed architect. Any alteration made to this item must be accompanied by a specific description of change or changes made; date change was made, as well as the seal of the licensed architect who made or oversaw the changes.

MARK	DATE	DESCRIPTION
1	04/27/12	ADDENDUM 1
	04/18/12	ISSUED FOR BID

ISSUE:

PROJECT NO.:	12060
DRAWN BY:	DN
CHECKED BY:	PM
DRAWING SCALE:	6" = 1'-0"

SHEET TITLE:

FIXED WINDOW DETAILS

SHEET: A-504

DO NOT SCALE DRAWING

COPYRIGHT©STEPHEN J WESSLING ARCHITECTS INC. 2012

Drawing name: U:_SJW2012\12060 MontClair Elementary School Windows\Autocad\Addendum 1\12060 A-501_A1.dwg
Apr 27, 2012 - 12:40pm
Xref: U:_SJW2012\12060 MontClair Elementary School Windows\Autocad\Blocks\12060 ARCH D 24x36 Title Block 2012 - Window Replacement (2).dwg

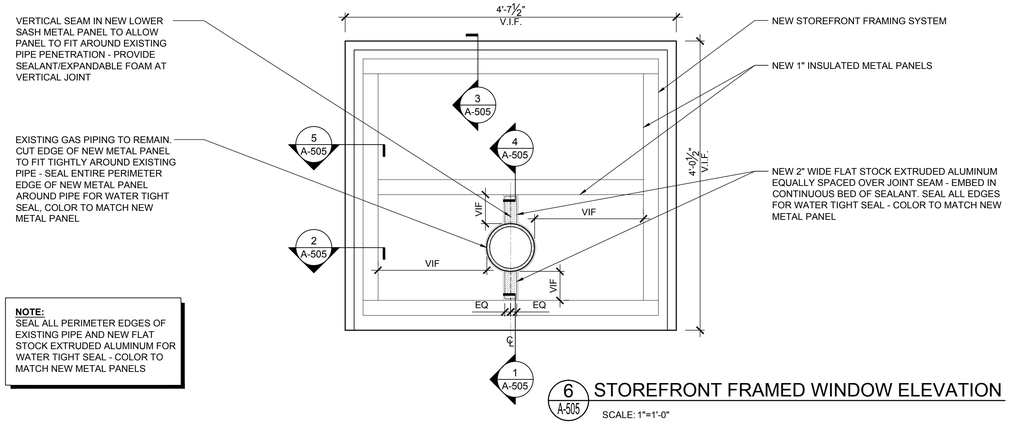

6 A-505 STOREFRONT FRAMED WINDOW ELEVATION

SCALE: 1"=1'-0"

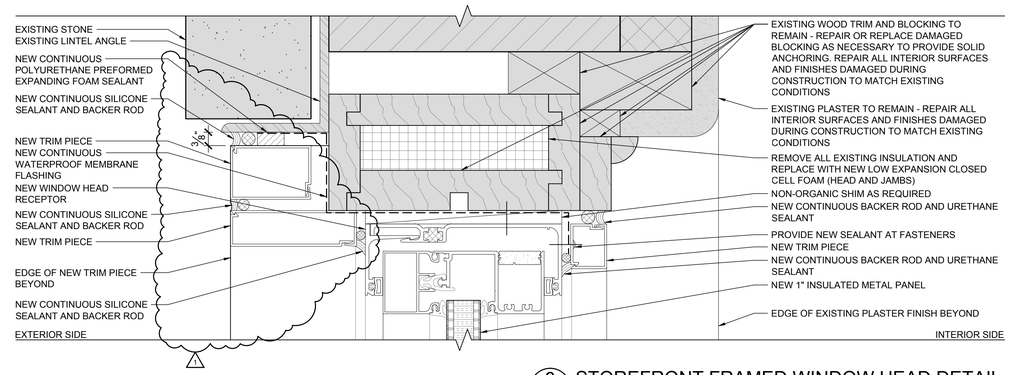

3 A-505 STOREFRONT FRAMED WINDOW HEAD DETAIL

SCALE: 6"=1'-0"

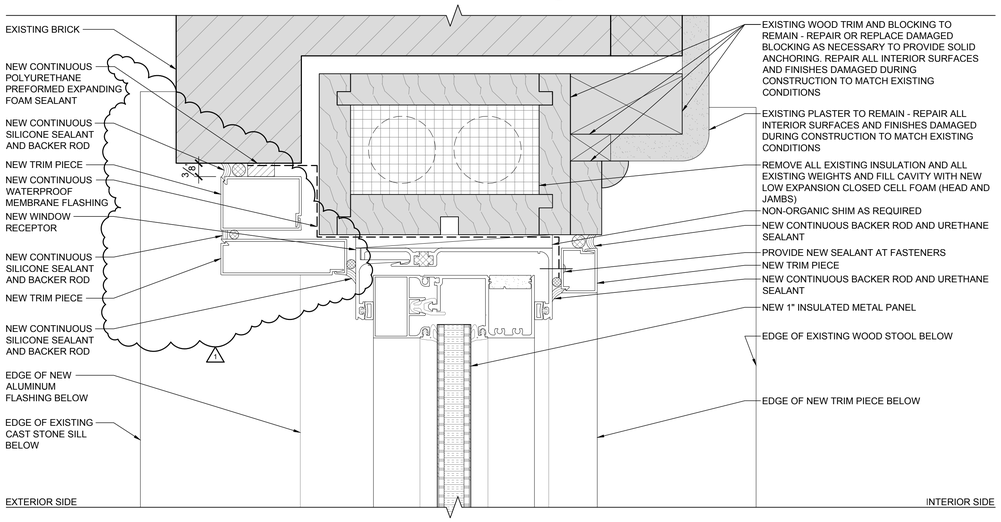

5 A-505 STOREFRONT FRAMED WINDOW UPPER JAMB DETAIL

SCALE: 6"=1'-0"

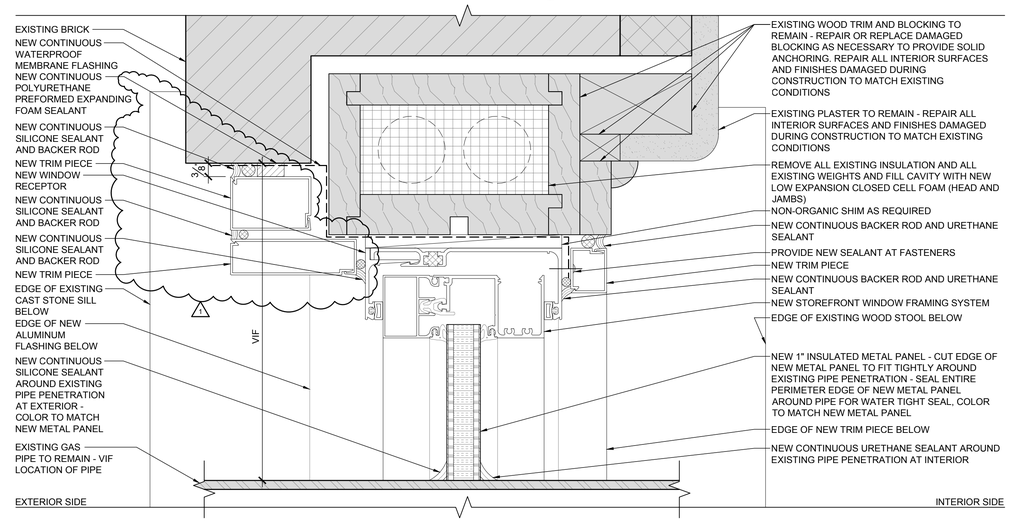

2 A-505 STOREFRONT FRAMED WINDOW LOWER JAMB DETAIL

SCALE: 6"=1'-0"

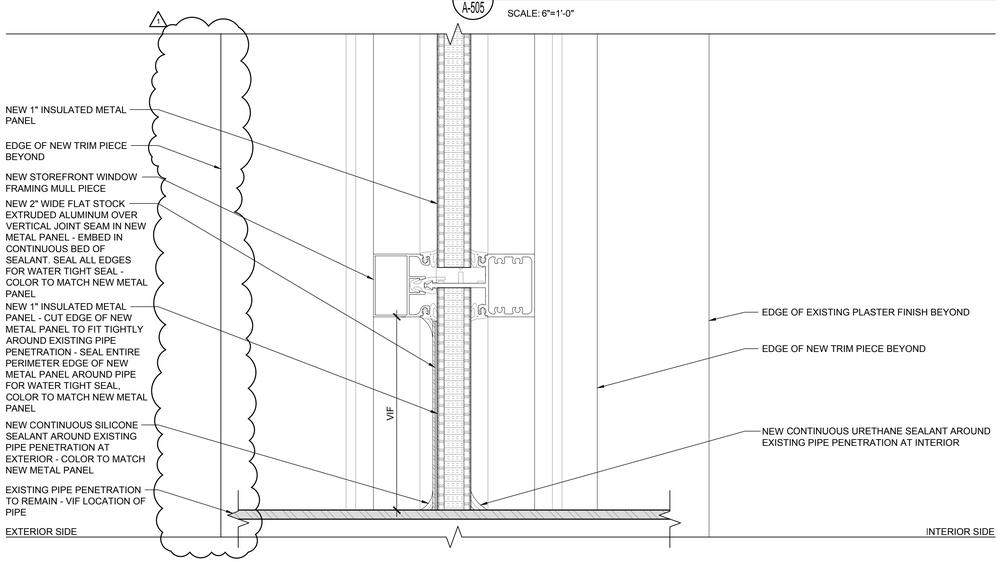

4 A-505 STOREFRONT FRAMED WINDOW HORIZONTAL MULLION DETAIL

SCALE: 6"=1'-0"

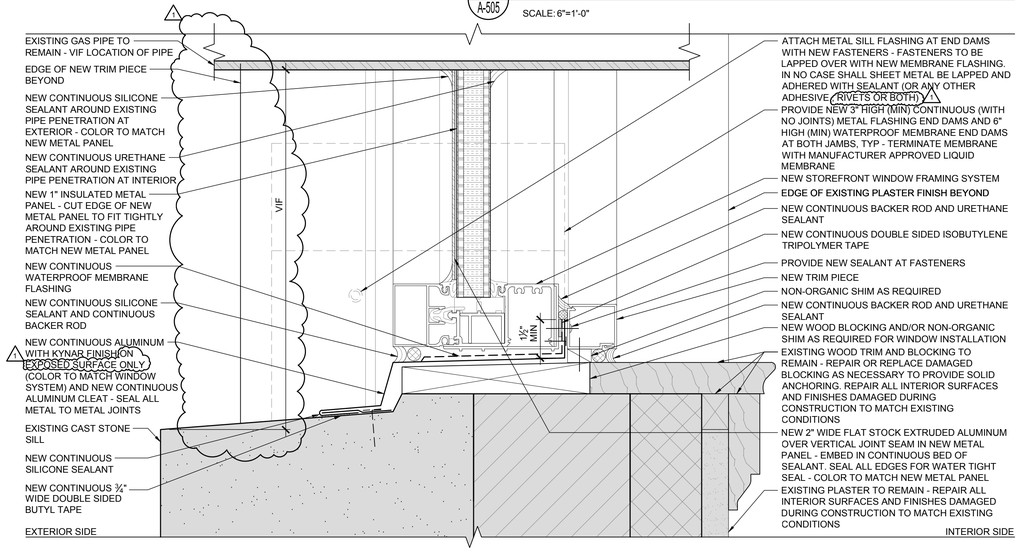

1 A-505 STOREFRONT FRAMED WINDOW SILL DETAIL

SCALE: 6"=1'-0"

WESSLING ARCHITECTS
AIA-CSI-BOCA
PRESIDENTS PLACE, 1250 HANCOCK STREET, SUITE 815N
QUINCY, MA 02169 TEL. 617-773-8150 FAX 617-773-4902
www.wesslingarchitects.com

CONSULTANTS:

PROJECT:

MONTCLAIR ELEMENTARY WINDOW REPLACEMENT

8 BELMONT STREET
QUINCY, MA

CLIENT:

THE CITY OF QUINCY

QUINCY, MA

NOT FOR CONSTRUCTION

PROFESSIONAL

PREPARED BY A LICENSED ARCHITECT

Any changes to this item can be a violation of the law unless altered by a licensed architect. Any alteration made to this item must be accompanied by a specific description of change or changes made; date change was made, as well as the seal of the licensed architect who made or oversaw the changes.

MARK	DATE	DESCRIPTION
1	04/27/12	ADDENDUM 1
	04/18/12	ISSUED FOR BID

ISSUE:

PROJECT NO.:	12060
DRAWN BY:	DN
CHECKED BY:	PM
DRAWING SCALE:	6" = 1'-0"

SHEET TITLE:

WINDOW DETAILS

SHEET:

A-505

DO NOT SCALE DRAWING

COPYRIGHT © STEPHEN J WESSLING ARCHITECTS INC. 2012

Drawing name: L:_SJW\2012\12060 MontClair Elementary School Windows\Autocad\Addendum 1\12060 A-501_A1.dwg
Apr 22, 2012 - 12:50pm
Xref J:_SJW\2012\12060 MontClair Elementary School Windows\Autocad\Blocks\12060_ARCH-D 24x36 Title Block 2012 - Window Replacement (2).dwg

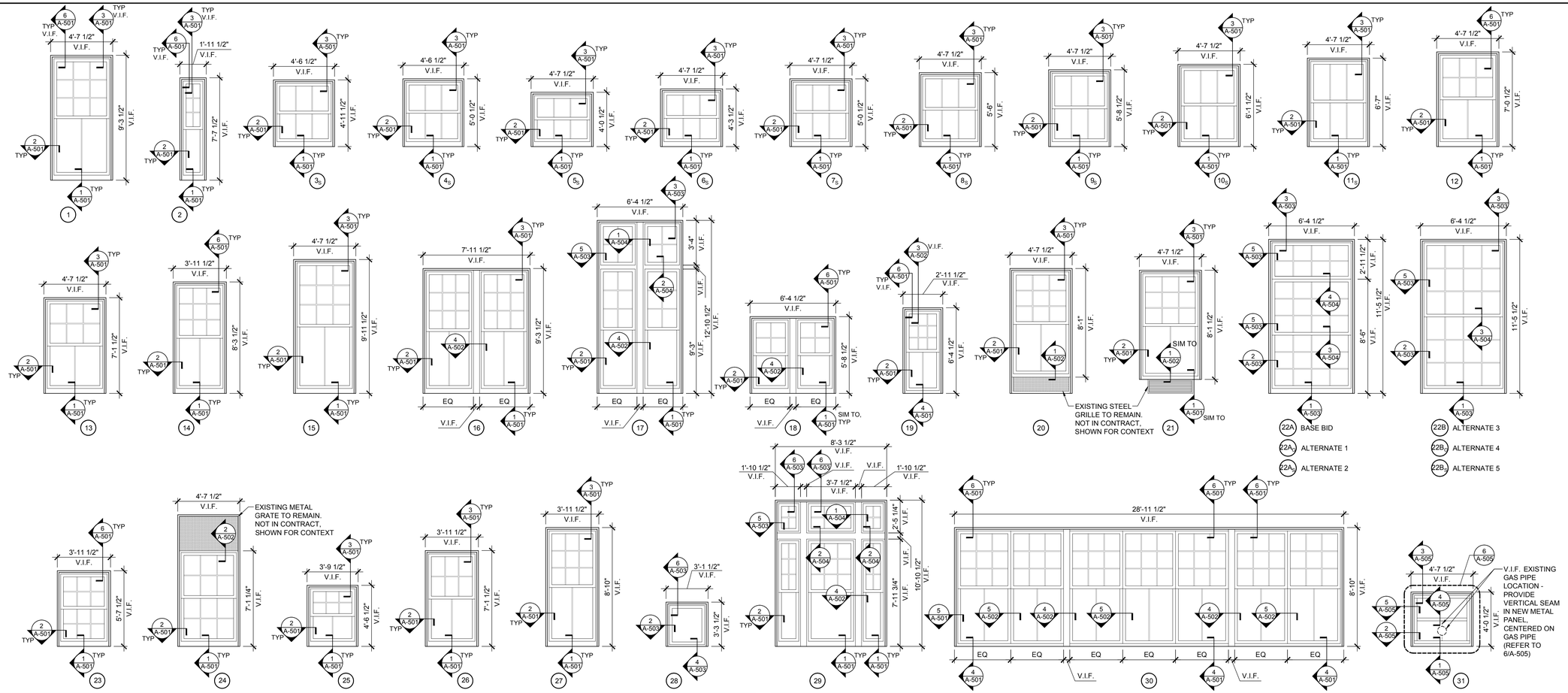

WINDOW SCHEDULE

TYPE	SIZE		DETAILS				MUNTIN DIVISION		GLAZING	NOTES
	WIDTH	HEIGHT	HEAD	JAMB	SILL	MULLION	UPPER SASH	LOWER SASH		
1	4'-7 1/2"	9'-3 1/2"	3/A-501 6/A-501	2/A-501	1/A-501	-	9	2	GL-1, GL-2, GL-3, GL-5	REFER TO NOTES 1, 2, 3, AND 6
2	1'-11 1/2"	7'-7 1/2"	3/A-501 6/A-501	2/A-501	1/A-501	-	6	-	GL-1, GL-3	REFER TO NOTES 1, 2, 3, AND 6
3_S	4'-6 1/2"	4'-11 1/2"	3/A-501	2/A-501	1/A-501	-	3	3	GL-4	REFER TO NOTES 1, 2, 3, 4, AND 6
4_S	4'-6 1/2"	5'-0 1/2"	3/A-501	2/A-501	1/A-501	-	3	3	GL-4	REFER TO NOTES 1, 2, 3, 4, AND 6
5_S	4'-7 1/2"	4'-0 1/2"	3/A-501	2/A-501	1/A-501	-	3	3	GL-4	REFER TO NOTES 1, 2, 3, 4, AND 6
6_S	4'-7 1/2"	4'-3 1/2"	3/A-501	2/A-501	1/A-501	-	3	3	GL-4	REFER TO NOTES 1, 2, 3, 4, AND 6
7_S	4'-7 1/2"	5'-0 1/2"	3/A-501	2/A-501	1/A-501	-	3	3	GL-4	REFER TO NOTES 1, 2, 3, 4, AND 6
8_S	4'-7 1/2"	5'-6"	3/A-501	2/A-501	1/A-501	-	3	3	GL-4	REFER TO NOTES 1, 2, 3, 4, AND 6
9_S	4'-7 1/2"	5'-8 1/2"	3/A-501	2/A-501	1/A-501	-	3	3	GL-4	REFER TO NOTES 1, 2, 3, 4, AND 6
10_S	4'-7 1/2"	6'-1 1/2"	3/A-501	2/A-501	1/A-501	-	3	3	GL-4	REFER TO NOTES 1, 2, 3, 4, AND 6
11_S	4'-7 1/2"	6'-7"	3/A-501	2/A-501	1/A-501	-	3	3	GL-4	REFER TO NOTES 1, 2, 3, 4, AND 6
12	4'-7 1/2"	7'-0 1/2"	6/A-501	2/A-501	1/A-501	-	6	2	GL-1	REFER TO NOTES 1, 2, 3, AND 6
13	4'-7 1/2"	7'-1 1/2"	3/A-501	2/A-501	1/A-501	-	6	2	GL-4	REFER TO NOTES 1, 2, 3, AND 6
14	3'-11 1/2"	8'-3 1/2"	6/A-501	2/A-501	1/A-501	-	9	2	GL-1, GL-3	REFER TO NOTES 1, 2, 3, 4, AND 6
15	4'-7 1/2"	9'-11 1/2"	3/A-501	2/A-501	1/A-501	-	9	2	GL-3	REFER TO NOTES 1, 2, 3, AND 6
16	7'-11 1/2"	9'-3 1/2"	3/A-501	2/A-501	1/A-501	4/A-502	9 (EA)	2 (EA)	GL-1	REFER TO NOTES 1, 2, 3, AND 6
17	6'-4 1/2"	9'-3"	-	2/A-501	1/A-501	4/A-502 2/A-504	6	-	GL-2	REFER TO NOTES 1, 2, 3, AND 6
17-TRANSOM	6'-4 1/2"	3'-4"	3/A-503	5/A-503	-	1/A-504 2/A-504	4		GL-1	REFER TO NOTES 1, 2, 3, AND 6
18	6'-4 1/2"	5'-8 1/2"	6/A-501	2/A-501	1/A-501	4/A-502	4 (EA)	-	GL-2	REFER TO NOTES 1, 2, 3, AND 6
19	2'-11 1/2"	6'-4 1/2"	3/A-502 6/A-501	2/A-501	4/A-501	-	9	2	GL-4	REFER TO NOTES 1, 2, 3, 6, AND 7

WINDOW SCHEDULE

TYPE	SIZE		DETAILS				MUNTIN DIVISION		GLAZING	NOTES
	WIDTH	HEIGHT	HEAD	JAMB	SILL	MULLION	UPPER SASH	LOWER SASH		
20	4'-7 1/2"	8'-1"	3/A-501	2/A-501	1/A-502	-	9	2	GL-3	REFER TO NOTES 1, 2, 3, AND 6
21	4'-7 1/2"	8'-1 1/2"	3/A-501	2/A-501	1/A-501 1/A-502	-	9	2	GL-3	REFER TO NOTES 1, 2, 3, AND 6
22A	6'-4 1/2"	8'-6"	-	2/A-503 5/A-503	1/A-503	3/A-504 4/A-504	12	12	GL-3	REFER TO NOTES 1, 2, 3, 5, 6, AND 8
22A - TRANSOM	6'-4 1/2"	2'-11 1/2"	3/A-503	5/A-503	-	4/A-504		8	GL-3	REFER TO NOTES 1, 2, 3, 5, 6, AND 8
22B	6'-4 1/2"	11'-5 1/2"	3/A-503	2/A-503 5/A-503	1/A-503	3/A-504	12	12	GL-3	REFER TO NOTES 1, 2, 3, 5, AND 8
23	3'-11 1/2"	5'-7 1/2"	6/A-501	2/A-501	1/A-501	-	6	6	GL-3	REFER TO NOTES 1, 2, 3, AND 6
24	4'-7 1/2"	7'-1 1/4"	2/A-502	2/A-501	1/A-501	-	6	6	GL-2	REFER TO NOTES 1, 2, 3, AND 6
25	3'-9 1/2"	4'-6 1/2"	3/A-501	2/A-501	1/A-501	-	6	2	GL-4	REFER TO NOTES 1, 2, 3, AND 6
26	3'-11 1/2"	7'-1 1/2"	3/A-501	2/A-501	1/A-501	-	6	2	GL-3	REFER TO NOTES 1, 2, 3, AND 6
27	3'-11 1/2"	8'-10"	3/A-501	2/A-501	1/A-501	-	9	2	GL-1, GL-5	REFER TO NOTES 1, 2, 3, AND 6
28	3'-1 1/2"	3'-3 1/2"	6/A-503	2/A-503	4/A-503	-	-		GL-2	REFER TO NOTES 1, 2, 3, AND 6
29-TRANSOM ENDS	1'-10 1/2"	2'-5 1/4"	6/A-503	5/A-503	-	1/A-504 2/A-504	4 (EA)		GL-1	REFER TO NOTES 1, 2, 3, AND 6
29-TRANSOM MIDDLE	3'-7 1/2"	2'-5 1/4"	6/A-503	-	-	1/A-504 2/A-504	6		GL-1	REFER TO NOTES 1, 2, 3, AND 6
29-SIDELIGHT	1'-10 1/2"	7'-11 3/4"	-	2/A-501	1/A-501	2/A-504 4/A-502	6 (EA)	-	GL-2	REFER TO NOTES 1, 2, 3, AND 6
29-MIDDLE WINDOW	3'-7 1/2"	7'-11 3/4"	-	-	1/A-501	2/A-504 4/A-502	9	-	GL-2	REFER TO NOTES 1, 2, 3, AND 6
30	28'-11 1/2"	8'-10"	6/A-501	5/A-501	4/A-501	4/A-502 5/A-502	9 (EA)	2 (EA)	GL-1, GL-3	REFER TO NOTES 1, 2, 3, AND 6
31	4'-7 1/2"	4'-0 1/2"	3/A-505	2/A-505 5/A-505	1/A-505	4/A-505	3	-	METAL PANEL	STOREFRONT FRAMING, REFER TO NOTE 3, PROVIDE METAL PANELS AT BOTH UPPER AND LOWER LIGHT

NOTES:
1. REFER TO ELEVATION SHEETS A-201, A-202, AND A-203 FOR GLAZING TYPE LOCATIONS.
2. WHERE MUNTINS ARE SHOWN, ALL INDIVIDUAL PANES ARE TO BE EQUALLY SPACED AND SIZED.
3. ALL DIMENSIONS TO BE VERIFIED IN THE FIELD (V.I.F.).
4. FOR SUBSCRIPT "S", PROVIDE A NEW ALUMINUM SCREEN (FULL HEIGHT). REFER TO ELEVATION FOR LOCATION OF SCREEN.
5. SUBSCRIPT "G" REFERS TO ALTERNATE OPTIONS 2 AND 5 FOR WINDOWS 22A AND 22B, TO HAVE ORIGINAL METAL GRATE INSTALLED OVER WINDOW.
6. ALL WINDOWS ARE SINGLE HUNG WINDOWS. ALL TRANSOM WINDOWS ARE FIXED.
7. PROVIDE METAL PANEL AT UPPER SASH. REFER TO ELEVATION SHEETS FOR LOCATIONS.
8. REFER TO WINDOW ELEVATIONS 22A AND 22B/A-601 FOR ALTERNATE OPTIONS.

WESSLING ARCHITECTS
AIA-CSI-BOCA
PRESIDENTS PLACE, 1250 HANCOCK STREET, SUITE 815N
QUINCY, MA 02169 TEL. 617-773-8150 FAX 617-773-4902
www.wesslingarchitects.com

CONSULTANTS:

PROJECT:

MONTCLAIR ELEMENTARY WINDOW REPLACEMENT

8 BELMONT STREET
QUINCY, MA

CLIENT:

THE CITY OF QUINCY

QUINCY, MA

NOT FOR CONSTRUCTION

PROFESSIONAL

PREPARED BY A LICENSED ARCHITECT
Any changes to this item can be a violation of the law unless altered by a licensed architect. Any alteration made to this item must be accompanied by a specific description of change or changes made; date change was made, as well as the seal of the licensed architect who made or oversaw the changes.

MARK	DATE	DESCRIPTION
1	04/27/12	ADDENDUM 1
	04/18/12	ISSUED FOR BID

ISSUE:

PROJECT NO.:	12060
DRAWN BY:	CJG
CHECKED BY:	PM
DRAWING SCALE:	AS NOTED

SHEET TITLE:

WINDOW TYPES AND SCHEDULE

SHEET:

A-601

DO NOT SCALE DRAWING

COPYRIGHT © STEPHEN J WESSLING ARCHITECTS INC. 2012

Display used in: J:\2012\12060 MontClair Elementary School Windows\Autocad\Addendum 1\12060 A-601_A1.dwg
Apr 27, 2012 - 12:52pm
Xref: J:_SJWin\2012\0000 MontClair Elementary School Windows\Autocad\Block\12060 ARCH D 24x36 Title Block 2012 - Window Replacement (2).dwg