BID DOCUMENTS

TOWN BROOK BASE FLOW RECAPTURE IMPROVEMENTS PROJECT QUINCY, MASSACHUSETTS

MAY 2013

City of Quincy
DPW

PREPARED FOR:
CITY OF QUINCY PUBLIC WORKS DEPARTMENT

COMMONWEALTH OF MASSACHUSETTS
KARLIS SKULTE
CIVIL
No. 47703
REGISTERED PROFESSIONAL ENGINEER
5/6/2013

DANIEL G. RAYMONDI
COMMISSIONER

KATHRYN HOBIN
CHIEF PROCUREMENT OFFICER

EBI Consulting
environmental | engineering | due diligence

21 B Street
Burlington, MA 01803
Tel: (781) 273-2500
Fax: (781) 273-3311
www.ebiconsulting.com

TABLE OF CONTENTS

DIVISION 00 – BIDDING AND CONTRACT REQUIREMENTS	**Section No.**
Invitation to Bid	001010
Instruction to Bidders	002100
Form of General Bid	004100
Bid Bond	004110
Representations and Certifications	004500
Certification of Bidder Regarding Equal Opportunity	
Right-To-Know Law Certification	
Non-Collusive Affidavit of Bidder	
Certification of Non-Segregated Facilities	
Affidavit Regarding Prior Labor Disputes	
CPA Certification	
Certification of Internal Accounting	
Certification of General and Sub-Bidders	004520
Agreement	005000
Performance Bond Form	006113.13
Payment Bond Form	006113.16
Certificate of Insurance	006216-1
Notice of Award	005100
Indemnity Agreement	005110
Contractor's Certification	005120
Notice to Proceed	005500
Certificate of Compliance with Tax Laws	006270
General Conditions	00700
Supplementary Conditions Part I – Amendments to the General Conditions	00800
Supplementary Conditions Part II – Statutory Requirements	00850
Determination of Wage Rates	
Permits	008900

DIVISION 01 – GENERAL REQUIREMENTS	
Summary of Work	011000
Special Provisions	011700
Measurement and Payment	012000
Submittals	013000
Control of Work	015000
Temporary Storm Drain Bypass	015142
Temporary Construction Facilities	015200
Traffic and Safety Controls	015500
Uniformed Officer for Traffic Control	015530
Environmental Protection	015700
Use and Control of Materials	016000
Project Closeout	017700

DIVISION 05 – METALS

Metal Fabrications 055000

DIVISION 31 – EARTHWORK

Site Clearing 311000
Demolition 311101
Earth Stripping and Stockpiling 311400
Excavation and Fill 312300
Subgrade Preparation 312313
Dewatering 312319
Erosion Control 312500

DIVISION 32 – EXTERIOR IMPROVEMENTS

Asphalt Paving 321216
Precast Concrete Curbs 321613.23
Stone Curbs 321613.43
Site Cast-in-Place Concrete 321640
Pavement Markings 321723
Planting 329000
Turfs and Grasses 329200

DIVISION 33 – UTILITIES

Utility Identification Trace Wires 330526.23
Storm Utility Drainage Piping 334100
Storm Drainage Ponds and Reservoirs 334726
Storm Utility Drainage Structures 334900
Traffic Control Equipment 344116

APPENDIX

City of Quincy Commission Order of Conditions DEP File No. 59-1261 Appendix A
MassDEP Water Quality Certification – Town Brook Realignment Transmittal #X239696 Appendix B

RELATIONSHIP TO OTHER CONTRACT DOCUMENTS

This Project Manual forms a part of the project entitled Town Brook Open Space Improvements, Quincy, Massachusetts - Project Manual - prepared by:

Karlis Skulte
EBI Consulting
21 B Street
Burlington, MA 01803

The work identified in this Project Manual and the associated drawings, listed on the Site Drawing Index that follows, although separately bound, forms a part of the Contract Documents referenced above. The work performed under the Project Manual shall be subject to the General Conditions, Supplemental Conditions of the Contract and Division 1 General Requirements of the above referenced project.

SITE DRAWING INDEX

Drawing No.	Title
C-1	Title Sheet
C-2	Legend & General Notes
C-3	Existing Overall Site Plan & Key Map
C-4.1	Proposed Improvements Crown Colony Stormwater Detention Basin
C-4.2	Proposed Improvements Centre Street (North)
C-4.3	Proposed Improvements Centre Street (South)
C-5.1	Details 1
C-5.2	Details 2
C-5.3	Details 3
C-5.4	Details 4
S-1	Drainage Pipe Plan, Sections & Notes
Reference Drawing No.	**Title**
1 through 4	Existing Conditions

INTENTIONALLY BLANK

CITY OF QUINCY, MASSACHUSETTS
Department of Public Works

Thomas P. Koch
Mayor

Daniel G. Raymondi
Commissioner

INVITATION TO BID

The Department of Public Works for the City of Quincy, Massachusetts is seeking sealed bids for **Town Brook Base Flow Recapture Project** until 11:00 a.m. local time **Thursday, May 23, 2013**, in the offices of the Purchasing Agent, 1305 Hancock St., Quincy, Massachusetts 02169, at which time and place all bids will be publicly opened and read aloud.

The project consists of modifications and improvements to the existing storm drainage system in the vicinity of Centre Street at Burgin Parkway, in Quincy, Massachusetts. The work generally includes the construction of storm drainage culverts, manholes, diversion structures, water quality units, minor re-grading of an existing storm water detention basin, as well as associated utility adjustments, as needed.

All work under this contract shall be completed within Sixty (60) calendar days.

Detailed specifications are available on-line at the City of Quincy's website, www.quincyma.gov and also available at the Office of the Purchasing Agent, Quincy City Hall, 1305 Hancock Street, Quincy, Massachusetts, 02169, between the hours of 8:30 AM and 4:30 PM for a non-refundable printing charge of $100.00. Specifications will be available May 8, 2013.

Each bid shall be accompanied by a bid security in the amount of five percent (5%) of the total value of the bid in the form of a bid bond or certified/treasurer's check.

The bidding and award of this contract shall be in full compliance with Massachusetts General Laws, Chapter 30, Section 39M, as last revised. All applicable Federal, State and City of Quincy regulations in relation to Minority Business Enterprise, Women's Business Enterprise, Minority Work Force, Equal Employment Opportunity and subject to the minimum wage rates set under the Massachusetts Prevailing Wage Law Chapter 149, §26 to 27H and/or any applicable federal rates. The City reserves the right to waive any informality in or to reject any or all bids when such an action is deemed in the best interests of the City.

Non-responsive and/or unbalanced bids may be rejected.

Thomas P. Koch
Mayor

Daniel G. Raymondi
Commissioner of Public Works

Advertise		**Req. No.**
The Quincy Sun	May 9, 2013	S052313
The Central Register	May 8, 2013	

1305 Hancock St., Quincy MA 02169
Telephone: (617) 376-1060 Fax: (617) 376-1074
Printed on Recycled Paper

INTENTIONALLY LEFT BLANK

INSTRUCTIONS TO BIDDERS

ARTICLE 1 PROJECT IDENTIFICATION

1.1 Owner: City of Quincy, Massachusetts

1.2 Awarding Authority: Kathryn R. Hobin
Purchasing Agent
1305 Hancock St., Quincy, MA 02169

1.3 Project Name: Town Brook Base Flow Recapture

1.4 Funding:
a. The City of Quincy
b. Commonwealth of Massachusetts

1.5 The attached Documents are required to be submitted with the Bids. Failure to comply with these requirements may render the Bid non-responsive and thus be disqualified.

ARTICLE 2 QUALIFICATIONS OF BIDDERS

2.1 Bidders may be investigated by the City to determine if they are qualified to perform the work. Bidders shall submit within five (5) calendar days of the City's or Engineer's request, written evidence of such information and data necessary to make this determination.

2.2 The investigation of a Bidder will seek to determine whether the organization is adequate in size, is authorized to do business in the project jurisdiction, and has had previous experience and whether available equipment and financial resources are adequate to assure the City that the work will be completed in accordance with the terms of the Agreement. The amount of other work to which the Bidder is already committed may also be considered.

2.3 The City reserves the right to reject any Bid if the evidence submitted by, or the investigation of such Bidder fails to satisfy the City that such Bidder is properly qualified to carry out the obligations and the work included in the Contract Documents.

ARTICLE 3 COPIES OF CONTRACT DOCUMENTS

3.1 Complete sets of Contract Documents shall be used in preparing Bids; neither the City nor the Engineer assumes any responsibility for errors or misinterpretations resulting from the use of incomplete sets of Contract Documents.

3.2 Sets of Bidding Documents may be obtained:

electronically at no cost by registering at:

http://www.quincyma.gov/Government/PPD/PurchasingBidPage.cfm
Bidders shall send a confirming email to "purchasing@quincyma.gov" to allow Owner to maintain a plan holders list. If Bidding Documents are downloaded and/or printed from Owner's website, it is Bidder's responsibility to check the website for any addenda before submitting a Bid. The Owner will not be responsible for any Bid that omits addenda acknowledgement.

and

in hardcopy from Issuing Office, beginning on May 8, 2013, 8:30 a.m. to 4:30 p.m. Mondays through Friday.

Non-refundable printing price for each set of Bidding Documents: $100 payable by certified check, treasurer's or cashier's check, or money order to the City of Quincy.

Bidders requesting delivery of hardcopy may provide a Federal Express or UPS account number for delivery.

3.3 The City and the Engineer in making copies of Contract Documents available do so only for the purpose of obtaining bids on the Work and do not confer a license or grant permission for any other use.

ARTICLE 4 EXAMINATION OF CONTRACT DOCUMENTS AND SITE

4.1 Before submitting a Bid, each Bidder must (a) examine the Contract Documents thoroughly, (b) visit the site to familiarize themselves with local conditions that may in any manner affect cost, progress or performance of the Work, (c) familiarize themselves with Federal, State and local laws, ordinances, rules and regulations that may in any manner affect cost, progress, or performance of the work; and (d) study and carefully correlate Bidder's observations with the requirements of the Contract Documents.

4.2 All information given in the Drawings and the other bid documents relating to sub-surface and other conditions, natural phenomena, existing utilities, pipelines, other structures, etc. is from the best sources available to the City. All such information is furnished only for the information and convenience of the Bidders and is not guaranteed.

4.3 Before submitting the Bid, each Bidder may, at his own expense, make such additional investigations and tests as the Bidder may deem necessary to determine the accuracy of their Bid for performance of the work in accordance with the time, price and other terms and conditions of the Contract Documents.

4.4 Upon request, Owner may provide Bidder access to the Site to conduct such examinations, investigations, explorations, tests, and studies as Bidder deems necessary for submission of a Bid. Bidder shall be responsible for obtaining permission and necessary permits and insurance for access to the Site. Bidder shall clean up and restore the Site to its former

condition upon completion of any such explorations, investigations, tests, and studies. Bidder shall comply with all applicable Laws and Regulations relative to excavation and utility locates.

4.5 The lands upon which the work is to be performed and rights-of-way for access thereto are identified on the Drawings.

4.6 The submission of a Bid will constitute an incontrovertible representation by the Bidder that he has complied with every requirement of this Article 4 and that the Contract Documents are sufficient in scope and detail to indicate and convey understanding of all terms and conditions for performance of the work.

ARTICLE 5 INTERPRETATIONS

5.1 All questions about the meaning or intent of the Contract Documents must be received in writing by the City of Quincy Purchasing Department, 1305 Hancock St., Quincy, MA 02169, attention Kathryn R. Hobin, Purchasing Agent, via fax 617-376-1074 or email at khobin@quincyma.gov with a copy to Kim Trillcott kimtrillcott@quincyma.gov.

5.2 The deadline for questions is **4:00 p.m. on May 15, 2013**. Written clarifications or interpretations will be issued through Addenda. No addenda, except via FAX transmission or email, will be issued any later than 72 hours before the bid opening date. Only questions answered by formal written Addenda will be binding. Oral and other clarifications or interpretations will be without legal effect. Addenda will be sent out to all parties recorded to have received the Contract Documents.

5.3 Each Bidder shall be responsible for determining all Addenda issued have been received and incorporated into their Bid.

5.4 **A BID WHICH INCLUDES, FOR ANY ITEM, A BID PRICE THAT IS ABNORMALLY HIGH OR LOW, MAY BE REJECTED AS AN UNBALANCED BID.**

5.5 The quantities in the Bid Form are being set forth as a basis for the comparison of bids only and the actual amount of work may not correspond therewith.

5.6 The City reserves the right to delete all or any portion of the work or add new work or to decrease or increase the scope of any item of the work to be done under this Contract either prior to executing the Contract or at any time during the life of the Contract. Exercise by the City of the above rights shall not constitute any grounds or basis of claims for damages or for a loss of anticipated profits.

Also, an increase or a decrease of quantity for any bid item (regardless of its magnitude) shall not be regarded as a grounds or basis for any increase or decrease in the Contract unit prices, nor in the time allowed for the completion of the work except as provided for in the Contract.

ARTICLE 6 PRE-BID CONFERENCE

6.1 A Pre-Bid Conference will not be held. Any questions or requests of interpretations will be addressed in accordance with Article 5.

ARTICLE 7 BID SECURITY

7.1 Each bid must be accompanied by a bid bond or certified check or a treasurer's/cashiers check issued by a bona fide bank or trust company, payable to the City of Quincy. The Bid Security shall be in the amount of five percent (5%) of the Total Bid Price. The Bid Security shall be sealed in a separate envelope form the Bid and then attached to the envelope containing the Bid. All Bid Securities except those of the three lowest responsible and eligible bidders will be returned within ten calendar days after the opening of bids. All Bid securities will be returned on the execution of the Agreement, or if no award is made, within sixty calendar days after the actual Bid Opening Date, unless the bid security is forfeited under the conditions stipulated herein.

7.2 In case a party to whom a Contract is awarded shall fail or neglect to execute the Agreement and furnish the satisfactory bonds within the time specified, the City may determine that the bidder has abandoned the Contract, and thereupon the Bid Forms and acceptance thereof shall be null and void, and the Bid Security accompanying the Bid form shall be forfeited to the City as liquidated damages for such failure or neglect and to indemnify the said City for any loss which may be sustained by failure of the Bidder to execute the Agreement and furnish the bonds aforesaid, provided that the amount forfeited to the City shall not exceed the difference between the Bid Price of said Bidder and that of the next lowest responsible and eligible Bidder and provided further that, in case of death, disability or other unforeseen circumstances affecting the Bidder, such Bid Security may be returned. After execution of the Agreement and acceptance of bonds by the City, the Bid Security accompanying the Bid Form of the Successful Bidder will be returned.

ARTICLE 8 PERFORMANCE, PAYMENT AND OTHER BONDS

8.1 Performance, Payment and other required bonds and project Insurance Certificates shall be provided in accordance with Article 5 of the General Conditions of the Contract.

8.2 All Bonds required, as Contract Security shall be furnished prior to the execution of the Agreement.

ARTICLE 9 BID FORMS

9.1 Each Bid shall be submitted on the Bid Form included in this Project Manual. All blank spaces for Bid prices must be filled in with unit or lump sum prices for each of the items for which the bid is requested.

9.2 Bid Forms shall be completed in ink or be typewritten. The Bid price of each item on the form shall be stated in words, and figures. Discrepancies between unit prices and their respective total amounts will be resolved in favor of the unit prices. Discrepancies between words and figures will be resolved in favor of words.

Discrepancies between the indicated sum of any column of figures and correct sum thereof shall be resolved in favor of the correct arithmetic sum, based on words.

9.3 Bids by corporations shall be executed in the corporation name, by the Chief Executive Officer (or other corporate officer). The bid must be accompanied by evidence of authority to sign the bid and the corporate seal shall be affixed and attested to by the secretary. The corporate address and state of incorporation shall be shown below the signature.

9.4 Bids by partnership shall be executed in the partnership name and signed by a partner, whose title shall appear under the signature. The official address of the partnership shall be shown below the signature.

9.5 All names shall be typed or printed below the signature.

9.6 The Bid shall confirm the receipt of all Addenda. Actual number of Addenda received shall be filled in on the Bid Form.

9.7 The address, telephone number and email address of the person to whom communications regarding the Bid are to be directed shall be shown.

9.8 Bids shall be submitted (original signatures) in a sealed envelope bearing on the outside the Bidder's name, address, Project Title, Bid opening date and time, for which the Bid is submitted. If forwarded by mail, the Bid shall be enclosed in a sealed envelope with the notation **"BID ENCLOSED"** on the face and address as above.

ARTICLE 10 RECEIPT OF BIDS

10.1 Sealed bids for the work under this Contract will be received at the time and place indicated in the Invitation to Bid.

10.2 The City may consider informal any Bid not prepared and submitted in accordance with the provisions hereof.

10.3 Bidders are cautioned that it is the responsibility of each individual Bidder to insure that the bid is in the possession of the responsible official or a designated alternate prior to the stated time and at the place of the Bid Opening. The City is not responsible for bids delayed by mail and/or other forms of delivery.

ARTICLE 11 MODIFICATIONS AND WITHDRAWAL OF BIDS

11.1 Bids may be modified only by an appropriate document duly executed and delivered to the place where Bids are to be submitted at any time prior to the opening of Bids.

11.2 Bids may be withdrawn prior to the scheduled Bid Opening time or the authorized postponement thereof.

11.3 Bids, once officially opened, cannot be withdrawn and shall remain open for a period of sixty (60) calendar days from the date of the opening. The City, at its sole discretion, may release any bid and return the Bid Security prior to that date.

ARTICLE 12 AWARD OF CONTRACT

12.1 The Contract will be awarded to the lowest responsible and eligible bidder (Successful Bidder). Such a Bidder shall possess the skill, ability, job-related prior work experience, and integrity necessary for the faithful performance of the work and the bid, apart form being complete and responsive, is the lowest in price of all the bids opened.

12.2 The City reserves the right to reject any and all Bids, to waive any and all informalities, if it is in the City's best interest to do so, and the right to disregard all nonconforming, non-responsive, unbalanced and conditional Bids.

12.3 The City also reserves the right to reject the Bid of any Bidder who is considered to be unqualified in accordance with Article 2, above.

12.4 If the Contract is to be awarded, the City will give the Successful Bidder a Notice of Award within sixty (60) calendar days after the actual Bid Opening Date. The Notice of Award will have to be formally acknowledged and accepted by the Bidder within the time period stipulated herein.

12.5 The acceptance of the above Notice of Award shall be accompanied by a complete list of sub-contractors (specialty, suppliers, and sub-consultants, etc.) selected by the Bidder to work on the project. The list shall contain information on the percentage of total work (material, labor, equipment and services) allocated to each sub-contractor.

ARTICLE 13 EXECUTION OF AGREEMENT

13.1 When the City gives a Notice of Award to the Successful Bidder, at least six (6)-unsigned copies of the Agreement and all other applicable Contract Documents will accompany it. Within ten (10) calendar days from the date of such notification, Contractor shall execute and return all copies of the Agreement and all other applicable Contract Documents to the City. Within ten-(10) calendar days thereafter, the City will deliver one fully signed copy along with the "Notice to Proceed" to the Contractor.

13.2 If for any reason the Notice to Proceed cannot be issued within such period, the time may be extended by mutual agreement between the City and the Contractor. If the Notice to Proceed

has not been issued within the ten (10) calendar days after signing of the Agreement, or within the time period mutually agreed upon, the Contractor may terminate the Agreement without further liability on the part of either party.

13.3 The Bidder's attention is especially directed to special requirements in relation to project construction work and completion schedule, specified in the Division 01 Sections of this Project Manual. Each Bidder is urged to study these requirements to insure compliance with the same before submitting the Bid.

ARTICLE 14 SAFETY AND HEALTH REGULATIONS

14.1 This Project is subject to all of the Safety and Health Regulations (CFR 29, Part 1926 and all subsequent amendments) as promulgated by the U.S. Department of Labor on June 24, 1974, and CFR 29, Part 1910, General Industry Safety and Health Regulations Identified as Applicable to Construction.

14.2 The Successful Bidder shall comply with the Department of Labor Safety and Health Regulations for Construction promulgated under the Occupational Safety and Health Act of 1970 (PL-91-596) and under Section 107 of the Contract Work Hours and Safety Standards Act (PL-91-54).

14.3 The Successful Bidder shall have a competent person or persons, as required under the Occupational Safety and Health Act on the site to inspect the Work and to supervise the conformance of the Work with the regulations of the Act.

14.4 This project is also subject to the Massachusetts Department of Labor and Industries Division of Industrial Safety "Rules and Regulations for the Prevention of Accidents in Construction Operations (Industrial Bulletin No. 12)".

ARTICLE 15 SALES TAX

15.1 The materials and supplies to be used in the Work shall be exempt from all applicable Federal, State and local sales taxes.

ARTICLE 16 UTILITY UNDERGROUND PLANT DAMAGE PREVENTION SYSTEM

16.1 All excavations within public or private ways are subject to the requirements of Massachusetts General Laws, Acts of 1983, Chapter 252, included in Part II of the Supplementary Conditions.

ARTICLE 17 WAGE RATES

17.1 All work done under this Contract shall be subject to compliance with the minimum wage rates as mandated by the Commonwealth of Massachusetts Department of Labor and Industries

and the U.S. Department of Labor Wage Rates issued in the most recent wage decisions applicable to the project area.

17.2 The Commonwealth of Massachusetts Minimum Wage Rates issued under the provisions of the Massachusetts General Laws, Chapter 149, Section 26 to 27H, as amended, shall apply to the projects when the use of Federal funds is not involved on a particular project.

17.3 The Schedule of Minimum Wage Rates is included in Section 008500 and shall be strictly enforced.

17.4 It is the responsibility of the Contractor, before submitting the Bid, to verify the minimum wage rates and to request, if necessary, any additional and/or the latest information on wage rates for all tradespeople to be employed under this contract.

ARTICLE 18 COMPETITIVE BIDDING

18.1 The Bidding and award of this contract shall be in full compliance with the Federal Procurement Act and with MGL Chapter 30, Section 39M, as last revised.

ARTICLE 19 GUARANTEES

19.1 In addition to other guarantees due the City, the Contractor guarantees that the Work and services to be performed under the Contract, and all workmanship, materials, and equipment furnished, used or installed shall be free from defects and flaws, and shall be in strict accordance with the Drawings, Specifications, and other Contract Documents. Also, the strength of all parts of all manufactured equipment shall be adequate and as specified and that the performance test requirements of the Contract shall be fulfilled. This guarantee shall be for a period of one year from and after the date of Substantial Completion and acceptance of the Work unless otherwise specified herein.

The Performance Bond shall remain in full force and effect throughout the Guarantee Period.

19.2 If at any time within the said period of guarantee, any part of the Work requires repairs, correction and/or replacement, the City may notify the Contractor in writing to make the required repairs, correction or replacement. If the Contractor neglects to commence making such repairs, corrections, or replacements to the satisfaction of the City within ten (10) days from the date of receipt of such notice, or having commenced said repairs, corrections or replacement, fails to prosecute such work with diligence, the City may employ other person(s) to make the same, and all direct and indirect costs of making said repairs, corrections or replacements, including compensation for additional professional services, shall be paid by the Contractor.

ARTICLE 20 LABOR DISPUTES

20.1 The Bidder shall submit a written statement as to whether it has been the subject of, or otherwise been involved in any labor dispute during the past five (5) years. If the bidder has been the subject of, or otherwise been involved in any labor dispute during this period, the Bidder must also provide a detailed description of each labor dispute, including the name and location of the project worked on, the nature of the dispute, the duration and dates during which the dispute took place and how the dispute was resolved. For these purposes, "labor disputes" shall include picketing or any other activity which disrupted or delayed the Work.

ARTICLE 21 RECORD KEEPING

21.1 The Contractor is reminded that the provisions of Chapter 30, Section 39R relative to record keeping apply to this Contract. A copy of c.30, s.39R is included in the Supplementary Conditions. A brief summary of the requirements is as follows:

a. The Contractor and all sub-contractors shall maintain books, records and accounts at least six (6) years after the final payment. They will be subject to inspection by the awarding authority, officers of the Inspector General, or the Department of Capital Asset Management.

b. Any changes in record keeping or recording transactions, which affect the awarding authority, shall be explained along with a letter from the Contractor's independent certified public accountant approving or otherwise commenting on the change.

c. The Contractor shall file with the awarding authority a statement of management as to whether the system of internal accounting controls has been established.

d. The Contractor shall file with the awarding authority a statement prepared and signed by an independent certified public account that an examination has been made of internal accounting controls.

ARTICLE 22 LAWS AND REGULATIONS

22.1 All applicable laws, ordinances and rules and regulations of all Public Agencies having jurisdiction over construction of the project shall apply to the Contract throughout.

22.2 This project is subject to all of the OSHA Safety and Health Regulations (see CFR Part 1926/1910 and all subsequent amendments), as promulgated by the United States Department of Labor on June 24, 1974 and MGL Chapter 454 CMR 10.00, et.seq.; The Prevention of Accidents and Illnesses in Construction Operations. Contractors shall become familiar with the requirements of these regulations.

22.3 Provisions regarding the requirements for Equal Employment Opportunity, Anti-discrimination, and Affirmative Action Programs are set forth in the Supplementary Conditions. Bidders shall certify compliance with the requirements set forth in the Supplementary Conditions regarding Equal Employment Opportunity, Anti discrimination, and Affirmative Action

Programs and employment preference required by Quincy Code of Ordinances, Section 12.28 and submission of information required in these Contract Documents.

Kathryn R. Hobin
Purchasing Agent

FORM OF GENERAL BID

PROPOSAL OF: _____

(hereinafter called "Bidder", organized and existing under the laws of the Commonwealth of Massachusetts, doing business as:

- a corporation
- a partnership
- an individual.

TO: The Director of Planning and Urban Redevelopment for the City of Quincy, Massachusetts (hereinafter called the "City" or "Owner")

In compliance with your Advertisements for Bids, Bidder hereby proposes to perform all work for the **Town Brook Open Space Improvement Project** within ten (10) calendar days following the effective date of the Contract Agreement and fully complete the project within sixty (60) calendar days thereafter. Work performed after this Contract Time Period (Completion) will be subject to liquidated damages. The Bidder further agrees to pay as liquidated damages: $1,200.00 for each day thereafter, charged against the Contractor, as provided for in Article 12 of the General Conditions.

Bidder agrees not to withdraw his bid for sixty (60) calendar days after the actual bid opening date and that if the City shall accept this bid, the Bidder will duly execute and acknowledge the Agreement and furnish duly executed and acknowledged, the required Contract Bonds, Insurance Certificates and other documents, <u>within ten (10) calendar days</u>, after the notification that the Agreement and other documents are ready for signature.

Bidder acknowledges receipt of Addenda No. ___ through No.___.

The attached price is to include and cover the furnishing of all materials (except as herein otherwise specified), all labor (requisite or proper), tools, equipment, apparatus and other means of construction, required in the performance of the works included herein, in the manner set forth and shown in the Specifications for the Work and in the form of Contract, and the **<u>completion</u>** thereof as specified herein. Bidder agrees to perform all the work described in the Contract Documents at the following unit price(s)/lump sum(s) for a total amount of:

_____DOLLARS
(in Words)

($ _____)
(in Figures)

All prices, except at the extended totals, shall be stated in both words and figures. In the event of a discrepancy between the price in words and the price in figures, the written word shall govern. In the event of a discrepancy between mathematical totals and the totals stated, the mathematical totals shall govern. All prices shall be typewritten or written by hand (printed) in black ink.

BID FORM

The Bidder agrees to perform all the Work described in the Contract Documents for the following unit prices or lump sum(s):

Item No.	Estimated Quantity	Brief Description of Items w/ Unit Bid Price in Words	Unit Bid Price in Figures	Amount in Figures
051200	**1**	**STRUCTURAL STEEL FRAMING**		
		_____ lump sum	$ _____	$ _____
055000	**1**	**STOP LOG**		
		_____ lump sum	$ _____	$ _____
311101-01	**1**	**REMOVE AND DISPOSE DRAINAGE PIPE**		
		_____ lump sum	$_____	$_____
311101-02	**1**	**REMOVE AND DISPOSE STORM DRAIN STRUCTURE**		
		_____ per each	$_____	$_____
312300-01(01)	**50**	**TEST PIT (MIN.)**		
		Fifty Dollars and Zero Cents per cubic yard	$ 50.00	$_____
312300-01(02)	**50**	**TEST PIT (ADDT'L)**		
		_____ per cubic yard	$_____	$_____
312300-02(01)	**20**	**UNCLASSIFIED EXCAVATION (MIN.)**		
		Sixty Dollars and Zero Cents per cubic yard	$ 60.00	$ 1,200.00

SUB-TOTAL PAGE 004100-2: $ _____

312300-02(02) 20 UNCLASSIFIED EXCAVATION (ADDT'L)

_____ $_____$_____
per cubic yard

312300-03(01) 75 EXCAVATION AND BACKFILL OF UNSUITABLE MATERIAL ABOVE NORMAL GRADE (MIN.)

Eight Dollars and Zero Cents $ 8.00 $ 600.00
per cubic yard

312300-03(02) 75 EXCAVATION AND BACKFILL OF UNSUITABLE MATERIAL ABOVE NORMAL GRADE (ADDT'L)

_____ $_____$_____
per cubic yard

312300-04(01) 20 EXCAVATION AND BACKFILL OF UNSUITABLE MATERIAL BELOW NORMAL GRADE

_____$_____$_____
per cubic yard

312300-05 20 ADDITIONAL EARTHWORK BELOW NORMAL GRADE

_____ $_____$_____
per cubic yard

321216-01 280 ASPHALT PAVING

_____ $_____ $_____
per ton

321216-02 1,040 MICROMILLING OF BITUMINOUS CONCRETE PAVEMENT

_____ $_____ $_____
per square yard

321216-03 60 BITUMINOUS CONCRETE SIDEWALK REMOVE AND REPLACE

_____ $_____ $_____
per square yard

SUB-TOTAL PAGE 004100-3: $ _____

321613.23 25 PRECAST CONCRETE CURB

_____ $_____ $_____
per linear foot

321613.43 160 REMOVE AND RESET GRANITE CURB

_____ $_____ $_____
per linear foot

321723 1 PAVEMENT MARKINGS

_____ $_____ $_____
lump sum

329600 1 TRANSPLANTING

_____ $_____ $_____
lump sum

334100-01 70 12-INCH REINFORCED CONCRETE PIPE

_____ $_____ $_____
per linear foot

334100-02 75 15-INCH REINFORCED CONCRETE PIPE

_____ $_____ $_____
per linear foot

334100-03 130 30-INCH REINFORCED CONCRETE PIPE

_____ $_____ $_____
per linear foot

334100-04 40 24-INCH X 18-INCH BOX CULVERT

_____ $_____ $_____
per linear foot

334726 1 CROWN COLONY STORMWATER BASIN IMPROVEMENTS

_____ $_____ $_____
lump sum

SUB-TOTAL PAGE 004100-4: $ _____

334900-01	**1**	**CATCH BASIN**		
		_____ per each	$_____	$_____
334900-02	**4**	**DRAINAGE MANHOLE**		
		_____ per each	$_____	$_____
334900-03	**1**	**DIVERSION STRUCTURE 1**		
		_____ per each	$_____	$_____
334900-04	**1**	**DIVERSION STRUCTURE 2**		
		_____ per each	$_____	$_____
334900-05	**2**	**WATER QUALITY UNIT**		
		_____ per each	$_____	$_____
334900-06	**1**	**DRAINAGE ACCESS MANHOLE**		
		_____ per each	$_____	$_____
344116	**1**	**TRAFFIC SIGNAL LOOPS**		
		_____ lump sum	$_____	$_____
999999.01	**640**	**UNIFORMED OFFICER FOR TRAFFIC CONTROL**		
		Forty-two Dollars and Zero Cents per hour	$ 42.00	$ 26,880.00
999999.02	**1**	**MISCELLANEOUS UTILITY RELOCATIONS**		
		Fifteen Thousand Dollars and Zero Cents CONTINGENCY	$ 15,000.00	$ 15,000.00

SUB-TOTAL PAGE 004100-5: $ _____

SUBTOTAL PAGE 004100-2 $_____

SUBTOTAL PAGE 004100-3 $_____

SUBTOTAL PAGE 004100-4 $_____

SUBTOTAL PAGE 004100-5 $_____

TOTAL BID AMOUNT $_____
(In Figures)

TOTAL BID AMOUNT: **$**_____
(In Figures)

_____

(Total Bid Amount Written In Words)

A. The undersigned agrees that, if he/she is selected as General Contractor, he/she will within ten (10) days, Saturdays, Sundays and legal holidays excluded, after presentation thereof by the Awarding Authority, execute a contract in accordance with the terms of this Bid and furnish a Performance Bond and also a Labor and Materials or Payment Bond, each of a surety company qualified to do business under the laws of the Commonwealth and satisfactory to the Awarding Authority and each in the sum of the Contract Price, the premiums for which are to be paid by the General Contractor and are included in the Contract Price.

B. The undersigned hereby certifies that he/she is able to furnish labor that can work in harmony with all other elements of labor employed or to be employed on the work and that he/she will comply fully with all laws and regulations applicable to awards made subject to M.G.L. Section 44 A.

C. The undersigned certifies under penalties of perjury that there have been no substantial changes in his financial position or business organization other than those changes noted within the application since the applicant's most recent prequalification statement and that the bid is in all respects bonafide, fair and made without collusion or fraud with any other person. "Person" shall mean any natural person, joint venture, partnership, corporation or other business or legal entity which sells materials, equipment or supplies used in or for, or engages in the performance of, the same or similar construction, reconstruction, installation, demolition, maintenance or repair work or any part thereof.

D. The undersigned further certifies under the penalties of perjury that this Bid is in all respects bona fide, fair and made without collusion or fraud with any other person. As used in this subsection, the word “person” shall mean any natural person, joint venture, partnership, corporation or other business or legal entity.

E. The undersigned further certifies under penalty of perjury that the said undersigned is not presently debarred from doing public construction work in the Commonwealth under the provision of Section Twenty-Nine F of Chapter Twenty-Nine, or any other applicable debarment provisions of any other Chapter of the General Laws or any rule or regulation promulgated thereunder.

F. A Labor and Material or Payment Bond in the amount of 100% of the total Contract Price must be

provided by the General Contractor. A Performance Bond in the amount of 100% of the total Contract Price must be provided by the General Contractor.

G. The time for holding bids, where Federal approval is not required is sixty (60) days, Saturdays, Sundays and legal holidays excluded, after opening of bids and where Federal approval is required, the time period for holding bids is sixty (60) days, Saturdays, Sundays and holidays excluded after Federal approval.

H. This project is subject to all requirements of M.G.L. Chapter 30, Section 39M and applicable requirements of MGL Chapter 149.

I. The time for substantial completion of this Contract is as set forth in the Invitation to Bid. Liquidated damages shall be assessed as set forth in the agreement. The Work will be considered complete and ready for final payment after warranty inspection is completed.

J. Interest of Officers and Employees of the City of Quincy or Members of the City Council or Other Public Officials: No officer, member or employee of the City of Quincy or its designees or agents, and no member of its governing body, and no other public official of the governing body of the locality or localities in which the project is situated or being carried out, who exercises any function or responsibilities in the review or approval or the undertaking or carrying out of this project, shall participate in any decisions relating to this Contract, which affects his personal interest or the interest of any corporation, partnership, or associations in which he is directly or indirectly interested or have any personal or pecuniary interest, direct or indirect, in this contract or proceeds thereof.

INTENTIONALLY LEFT BLANK

BID FORM

The Bidder hereby certifies that he is able to furnish labor that can work in harmony with all other elements of labor employed or to be employed on the work and that he will comply fully with all laws and regulations applicable to awards made in the Commonwealth of Massachusetts.

The Bidder certifies under the penalties of perjury that this bid is in all respects bona fide, fair and made without collusion or fraud with any other person. As used herein, the word "person" shall mean any natural person, joint venture, partnership, corporation, or other business or legal entity.

Interest of Officers and Employees of the City of Quincy or Members of the City Council or Other Public Officials: No officer, member or employee of the City of Quincy or its designees or agents, and no member of its governing body, and no other public official of the governing body of the locality or localities in which the project is situated or being carried out, who exercises any functions or responsibilities in the review or approval or the undertaking or carrying out of this project, shall participate in any decisions relating to this Contract, which affects his personal interest or the interest of any corporation, partnership, or association in which he is directly or indirectly interested or have any personal or pecuniary interest, direct or indirect, in this contract or the proceeds thereof.

The undersigned, as Bidder, declares that he has carefully examined the proposed form and has fully informed and satisfied himself as to the existing conditions, the character and requirements of the proposed work, the difficulties attendant upon its execution; and the accuracy of all estimated quantities stated in this bid and that he has carefully read and examined the form of contract, the standard specifications and plans therein referred to, and he proposes and agrees, if this proposal is accepted, that he will contract with the Party of the First Part to provide all necessary labor, equipment, tools, apparatus and other means of construction and to do all the work and furnish all the materials specified in the contract in the manner and time therein prescribed and according to the requirements of the City of Quincy as therein set forth and that he will take the payment therefore, the prices stated in the Bid.

The undersigned, as Bidder, declares that he understands that information relative to sub-surface and other conditions, natural phenomena, existing pipes and other structures (surface and/or sub-surface) has been furnished only for his information and convenience without any warranty or guarantee, expressed or implied, that the structures (surface and/or sub-surface) actually encountered will be the same as those shown on the drawings or in any of the other contract documents, and he agrees that he shall not use or be entitled to use any such information made available to him through the contract documents or otherwise, or obtained by him in his own examination or the site, as a basis or grounds for any claim against the City of the Engineer arising from or by reason or any variance which may exist between the aforesaid information made available to or acquired by him and the sub-surface and/or other conditions, natural phenomena, existing pipes and other structures (surface and/or sub-surface) encountered during construction, and that due allowance therefore has been made in this bid.

The undersigned, as Bidder, understands that the quantities of work tabulated in this bid or indicated

on the drawings or in the specifications or other contract documents are only approximate and are subject to increase or decrease, as deemed necessary by the Engineer.

The undersigned, as Bidder, agrees that for extra work, if any, performed in accordance with the terms and provisions of the annexed form of Agreement, he will accept compensation as stipulated therein as full payment for such extra work.

If this proposal shall be accepted and the Bidder shall fail to contract as aforesaid and to give a Bond in the sum to be determined as aforesaid with surety satisfactory to the City of Quincy **within ten (10) days** from the date of the mailing of the Notice of Award from the City of Quincy to him, according to the address herewith given, the City of Quincy may, at its option, determine that the bidder has abandoned the contract, and thereupon this proposal and acceptance thereof shall be null and void, and the certified check or bid submitted covering this proposal shall become the property of the City of Quincy, otherwise said certified check or bid bond shall be returned to the Bidder.

This bid must bear the written signature of the Bidder, or an authorized agent of the bidder. If the bidder is a corporation or a partnership, the bid must be signed by a duly authorized officer of such corporation or partnership, and the title of such an officer must be stated.

The Bidder offers the following information as evidence or qualifications to perform the work as bid in accordance with the requirements of the plans and specifications.

BID FORM

RELEVANT PREVIOUS EXPERIENCE

The Bidder shall list below the relevant prior work experience on similar projects, and give references that will enable the City to evaluate his qualifications to perform the work under this Contract. The length of the relevant experience must be at least 5 years on projects of comparable size and complexity. The evaluation shall be based on prior experience, work performance and level of key personnel skills, and business standing (add additional page if necessary).

I. PROJECTS

	Completion Date	Project Name	Contract Amount	Design Reference Engineer Name	Reference Phone No.
a.					
b.					
c.					
d.					
e.					
f.					

II. KEY PERSONNEL:

Key personnel to be employed on the job, in the event of contract award. Attach brief education and experience where applicable.

1. _____

2. _____

3. _____

4. _____

INTENTIONALLY LEFT BLANK

BID FORM

STATEMENT OF BIDDER'S QUALIFICATIONS

All questions must be answered and the date given must be clear and comprehensive. This statement must be notarized. If necessary, questions may be answered on separate attached sheet. The bidder may submit any additional information, if desired.

1. Name of Bidder:

2. Permanent main office address:

   a. Treasury Number (Employer's Identification No.):

3. When organized?

4. If a corporation, where incorporated?

5. How many years have you been engaged in the contracting business under your present firm or trade name?

   a. Names and home addresses of principal officers and their social security numbers: (attach separate sheet).

6. Contracts on hand: (Schedule these, showing gross amount of each contract and the approximate anticipated dates of completion. Name and address of client and name of person supervising for client.) (Attach separate sheet)

7. General character of work performed by your company?

8. Have you ever failed to complete any work awarded to you? If so, where and why?

9. Have you ever defaulted on a contract? If so, where and why?

10. List the more important contracts recently completed by you stating approximate cost of each, and the month and year completed. (Give names and addresses of client and name of person supervising for client). (See attached form.)

11. List your major equipment available for this contract. (Use separate sheet)

12. Experience in construction work similar in importance to this project. (See form)

13. Background and experience of the principle members of your organization, including the

officers.

14. Credit available: $_____.

15. Give bank reference, including bank name, address, telephone and contact name.

16. Will you, upon request, fill out a detailed financial statement and furnish any other information that may be required?

17. The undersigned hereby authorizes and requests any person, firm, or corporation to furnish any information requested by the City of Quincy in verification of the recitals comprising this Statement of Bidder's Qualifications.

Dated this _____ day of _____, 20___.

Name of Bidder: _____

By:_____

Title:_____

State of _____

County of _____

_____ being duly sworn, deposed and says that he is

_____ of _____
(office) (Name of Organization)

and that the answers to the foregoing questions and all statements contained therein are true and correct.

SUBSCRIBED AND SWORN TO, before me the _____ day of _____ , 20_____

_____
(Notary Public) Seal

My commission expires:_____

CITY OF QUINCY
Purchasing Department
1305 Hancock Street, Quincy, MA 02169

Phone: (617) 376-1060
Fax: (617) 376-1074

SIGNATURE AUTHORIZATION

At a duly authorized meeting of the Board of Directors of the

_____
(NAME OF CORPORATION)

held on _____, at which all the Directors were present or waived notice, it was
(DATE)

VOTED, that:

_____ _____
(NAME) (OFFICER)

of this company, be and he/she hereby is authorized to execute Contracts and Bonds in the name and behalf of said Company, and affix its Corporate Seal thereto, and such execution of any Contract or obligation in this Company's name on its behalf by such _____ under seal of the Company, shall be valid
(OFFICER)

and binding upon this Company. It was further voted that the City of Quincy may rely on such authorization of future Contracts until notified to the contrary.

A true copy,

ATTEST: _____
(CLERK'S SIGNATURE)

PLACE OF BUSINESS: _____

DATE OF THIS CONTRACT: _____

I hereby certify that I am the Clerk of the:

_____ that _____ is the
(COMPANY) (NAME)

duly elected _____ of said Company, and that the above VOTE has not been
(TITLE)

amended or rescinded and remains in full force and effect as of the date of this Contract.

_____ **CORPORATE SEAL**

INTENTIONALLY LEFT BLANK

CERTIFICATE OF ACKNOWLEDGMENT
OF CONTRACTOR FOR BID

State of

] Date: _____ 20

County of

On this _____ day of _____ , 20_____,

before me personally appeared _____

who being duly sworn, did depose and say as follows:

_____, that said firm consist of
(Company Name)

_____
(name of principals in firm and position)

_____

_____

that he executed the foregoing instrument on behalf of said firm for the uses and purposes stated herein. If a corporation, the seal affixed to the foregoing instrument is such corporate seal and it was so affixed by order of the Board of Directors of said corporation, and that by like order, he signed thereto his name and official designation.

_____
(Notary Public) (Seal)

My commission expires:_____

INTENTIONALLY LEFT BLANK

SIGNATURE PAGE

DATED: _____

BY: _____
(Signature and Title of Person Authorized to Sign Bid)

_____
(Name of General Bidder)

_____
(Business Address)

_____
(Social Security Number – Federal Tax ID No.)

Telephone Number: (_____) _____

Email: _____

(SEAL: IF BID IS BY A CORPORATION)

ATTEST: _____

The proposed surety company on the bond to be given as follows:

_____
(Contact Name)

_____
(Name of Surety)

_____
(Address of Home Office)

_____
(Massachusetts Address, if different)

_____
(Business Telephone)

INTENTIONALLY LEFT BLANK

This form may be substituted with standardized form issued by insurance/bonding agent.

BID BOND

KNOW ALL MEN BY THESE PRESENT, that we, the undersigned,

_____ as Principal and

_____ as Surety, are hereby held and firmly bound unto

_____ as OWNER in the penal sum of

for the payment of which, well and truly to be made, we hereby jointly and severally bind ourselves,

successors and assigns _____ .

Signed this _____ day of _____ , 20

The Condition of the above obligation is such that whereas the Principal has submitted to:

_____ a certain BID, attached hereto and hereby made a part hereof

to enter into a contract in writing for the:

_____

NOW, THEREFORE,

(A) If said BID shall be rejected, or

(B) If said BID shall be accepted and the Principal shall execute and deliver a contract int he Form of Contract attached hereto (properly completed in accordance with said BID) and shall furnish a BOND for his faithful performance of said contract, and for the payment of all persons performing labor, or furnishing materials in connection therewith, and shall in all other respects perform the agreement created by the acceptance of said BID, then this obligation shall be void, otherwise the same shall remain in force and effect; it being expressly understood and agreed that the liability of the Surety for any and all claims hereunder shall, in no event, exceed the penal amount of this obligation as herein stated.

The Surety, for value received, hereby stipulates and agrees that the obligations of said Surety and its BOND shall in no way be impaired or affected by any extension of the time within which the OWNER may accept such BID, and said Surety does hereby waive notice of any such extension.

This form may be substituted with standardized form issued by insurance/bonding agent.

IN WITNESS WHEREOF, the Principal and the Surety have hereunto set their hands and seals, and such of them as are corporations have caused their corporate seals to be hereto affixed and these present to be signed by their proper officers the day and year first set forth above.

_____ (L.S.)
Principal

_____
Surety

BY:_____

IMPORTANT: Surety companies executing BONDS must appear on the Treasury Department's most current list (Cir. 570, as amended) and be authorized to transact business in the state where the project is located.

CERTIFICATION OF BIDDER
REGARDING EQUAL EMPLOYMENT OPPORTUNITY

This certification is required pursuant to Executive Order 11246 (30 R.R. 123 1935). The implementing rules and regulations, provide that any bidder or prospective contractor, or any of their proposed subcontractors, shall state as an initial part of the bid or negotiations of the contract whether it has participated in any previous contract or subcontract subject to the equal opportunity cause: and, if so, whether it has filed all compliance reports due under applicable instructions.

Where the certification indicates that the bidder has not filed a compliance report due under applicable instructions, such bidder shall be required to submit a compliance report within seven (7) calendar days after bid opening. No contract shall be awarded unless such report is submitted.

CERTIFICATION BY BIDDER

NAMES AND ADDRESS OF BIDDER (Include Zip Code):

1. Bidder has participated in a previous contract or subcontract subject to the Equal Opportunity Clause.

   Yes No

2. Compliance reports were required to be filed in connection with such contract or subcontract.

   Yes No

3. Bidder has filed all compliance reports due under applicable instructions, including SF-100.

   Yes No

4. Have you ever been or are you being considered for sanction due to violation of the Executive of 11246, as amended?

   Yes No

Name and Title of Signatory (Please Type)

Signature:_____ Date:_____

RIGHT-TO-KNOW LAW

A bidder will not be eligible for award of this contract under this invitation for bids unless such bidder has submitted as part of its bid the following certification which will be deemed a part of the resulting contract.

CERTIFICATION

The Bidder hereby certifies that, if awarded this contract, he will fully comply with the Massachusetts Right-To-Know Law, c.470 of the Acts of 1983, (the Act). In addition, he shall:

1. obtain a Material Safety Data Sheet (MSDS), for all substances or mixtures of which appear on the Massachusetts Substance List that he or any of his subcontractors brings to or uses on the work site and will keep a copy of the MSDS on the work site of this contract;

2. label each container of a substance or mixture of substances on the Massachusetts Substance List, as required, in section 7 of the Act;

3. provide the same training and non-technical instruction that he is required to provide under section 15 of the Act to all Quincy personnel. Training shall include instructing on the nature and effects of any substance or mixture of substances listed on the Massachusetts Substance List which the Bidder or any of his subcontractors brings to or uses on the worksite.

4. provide to Quincy DPW employees on the work site the same protective equipment that the bidder or any of his subcontractors provides to his employees.

_____
Signature of Authorized Representative of Bidder

Bidder's Name: _____

Bidder's Address: _____

_____

NON-COLLUSION AFFIDAVIT

A bidder will not be eligible for award of this contract under this invitation for bids unless such bidder has submitted as part of its bid the following certification which will be deemed a part of the resulting contract.

State of _____

Date: _____ 20_____

County of _____

The undersigned being duly sworn, deposes and says that he is the:

_____

(sole owner, partner, president, treasurer, or other duly authorized official)

of _____

(name of company - bidder - as appears in submitted proposal)

for work in _____ on _____

(City/Town) (Bid Opening Date)

and certifies under penalties of perjury that this bid is in all respects bona fide, fair and made without collusion or fraud with any other person. As used in this paragraph the word "person" shall mean any natural person, joint venture, partnership, corporation or other business or legal entity.

_____

Signature/Title of Person Making Affidavit

Sworn to before me this:

_____ day of _____ 20_____

_____

(Notary Public)

My commission expires: _____ 20_____

CERTIFICATION
NON-SEGREGATED FACILITIES

The Bidder certifies that he does not maintain or provide for his employees any segregated facilities at any of his establishments, and that he does not permit his employees to perform their services at any location, under this control, where segregated facilities are maintained. The Bidder certifies further that he will not maintain or provide for his employees any segregated facilities at any of his establishments and that he will not permit his employees to perform their services at any location under his control where segregated facilities are maintained. The Bidder agrees that a breach of this certification will be a violation of the Equal Opportunity clause in any contract resulting from acceptance of this bid. As used in this certification, the term "segregated facilities" means any waiting rooms, work areas, restrooms, and washrooms, restaurants and other eating areas, timeclocks, locker rooms, and other storage or dressing areas, parking lots, drinking fountains, recreation or entertainment areas, transportation and housing facilities provided for employees which are segregated by explicit directive or are in fact segregated on the basis of race, color, religion or national origin, because of habit, local custom or otherwise. The Bidder agrees that (except where he has obtained identical certification from proposed subcontractors for specific time periods) he will obtain identical certifications from proposed subcontractors prior to the award of subcontracts exceeding $10,000.00 which are not exempt from the provisions of the Equal Opportunity clause, and that he will retain such certifications in his file.

Note: The penalty for making false statements in offers is prescribed in 18 U.S.C. ss.1001.

Date:_____, 20____

_____
(Name of Bidder)

Official Address (including Zip Code)

By:

_____

_____
(Title)

_____

AFFIDAVIT
REGARDING PRIOR LABOR DISPUTES

The Bidder must execute and complete the following statements as to whether it has been the subject of, or otherwise been involved in, any labor dispute during the past five (5) years. If the Bidder has been the subject of, or otherwise been involved in any labor dispute during this period, the bidder must also provide a detailed description of each labor dispute, including the name and location of the project worked on, the nature of the dispute was resolved. For these purposes, "labor disputes" shall include picketing or any other activity which disrupted or delayed the work.

I _____ , being first duly sworn, do hereby depose/state:
(Name)

1. I make each of the following statements with full authorization to bind

   _____ to each of the representations made below.
   (Name of Bidder)

2. _____ has/has not been involved in a labor dispute
   (Name of Bidder)

   as described above, within the past five (5) years.

3. (Complete only if bidder has been involved in dispute).

   The dispute(s) occurred on the following project(s). (Use separate sheet if necessary)

Name and Location of Project	Date Dispute Began	Date Concluded
a.		
b.		

   Attach separate sheet and give full description of the nature of each dispute and an explanation of how it was resolved. (Please give a full description below, for each such dispute).

Signed under the penalty of perjury this _____ day of _____ , 20____ .

BY: _____

on behalf of: _____
(Company name)

(To be typed onto letterhead of the Certified Public Accountant)

City of Quincy
City Solicitor's Office
1305 Hancock Street
Quincy, MA 02169

Attn: James S. Timmins
City Solicitor

RE: Town Brook Base Flow Recapture Project
Project Name

Dear Mr.Timmins:

Please be advised that I have reviewed the statement on internal accounting controls prepared by/for _____ (Name of Company), in connection with the above captioned project. This statement is required under Massachusetts General Laws, Chapter 30, Section 39R. In our opinion, representations of management are consistent with our evaluation of the system of internal accounting controls. In addition, we believe that they are reasonable with respect to transactions and assets in amounts which would be material when measured in relation to the firm's financial statements.

Yours sincerely,

_____
Certified Public Accountant

Note to awarded vendor: This form is to be completed **ONLY** when the contract exceeds $100,000. and is for the purchase of materials or for the construction, renovation, etc. of public works or public buildings.

CERTIFICATION

Internal Accounting

The Contractor certifies that it has internal accounting controls, as required by Chapter 30, Section 39R and that the Contractor will:

1. maintain accurate and detailed accounts for a six (6) year period after the final payment;

2. file regular statements of management concerning internal auditing controls;

3. file an annual audited financial statement; and

4. submit a statement from an independent certified public accountant that such CPA has examined management's internal auditing controls and expresses an opinion as to their consistency with management's statements in (2) above, and whether such statements are reasonable with respect to transactions and assets that are substantial in relation to designer's financial statements. General Laws, Chapter 7, Section 301 (e).

Signed under the pains and penalties of perjury:

_____

Name of Company

_____

Authorized Signature

Note to awarded vendor: This form is to be completed **ONLY** when the contract exceeds $100,000 and is for the purchase of materials or for the construction, renovation, etc. of public works or public buildings.

INTENTIONALLY BLANK

CERTIFICATION OF GENERAL BIDDERS ON PUBLIC CONSTRUCTION PROJECTS

I. CERTIFICATION REGARDING HEALTH AND SAFETY

The undersigned hereby certifies that he is able to furnish labor that can work in harmony with all other elements of labor employed or to be employed on the work; that all employees to be employed at the worksite will have successfully completed a course in construction safety and health approved by the United States Occupational Safety and Health Administration that is at least ten hours in duration at the time the employee begins work and who shall furnish documentation of successful completion of said course with the first certified payroll report for each employee; and that he will comply fully with all laws and regulations application to awards made subject to section 44A.

II. CERTIFICATION REGARDING NON-COLLUSION AND DEBARMENT

The undersigned further certifies under the penalties of perjury that this bid is in all respects bona fide, fair and made without collusion or fraud with any other person. As used in this subsection the word "person" shall mean any natural person, joint venture, partnership, corporation or other business or legal entity. The undersigned further certifies under penalty of perjury that the said undersigned is not presently debarred from doing public construction work in the Commonwealth under the provisions of section twenty-nine F of chapter twenty-nine, or any other applicable debarment provisions of any other chapter of the General Laws or any rule or regulation promulgated thereunder.

Date: _____

_____
Name of General Bidder

By _____
Signature

_____
Print name and title

_____
Business Address

_____
Street Address City and State

CERTIFICATION OF SUB- BIDDERS (IF ANY) ON PUBLIC CONSTRUCTION PROJECTS

I. CERTIFICATION REGARDING HEALTH AND SAFETY

The undersigned hereby certifies that he is able to furnish labor that can work in harmony with all other elements of labor employed or to be employed on the work; that all employees to be employed at the worksite will have successfully completed a course in construction safety and health approved by the United States Occupation Safety and Health Administration that is at least ten hours in duration at the time the employee begins work and who shall furnish documentation of successful completion of said course with the first certified payroll report for each employee; and that he will comply fully with all laws and regulations applicable to awards of subcontracts subject to section 44F.

II. CERTIFICATION REGARDING NON-COLLUSION AND DEBARMENT

The undersigned further certifies under penalties of perjury that this subbid is in all responses bona fide, fair and made without collusion or fraud with any other person. As used in this subsection the "person" shall mean any natural person, joint venture, partnership, corporation or other business or legal entity. The undersigned further certifies under penalty of perjury that the said undersigned is not presently debarred from doing public construction work in the Commonwealth under the provisions of section twenty-nine F of chapter twenty-nine, or any other applicable debarment provisions of any other chapter of the General Laws or any rule or regulation promulgated thereunder.

Date _____

_____
Name of Sub-bidder

By _____
Signature

_____
Print Name and Title

_____
Business Name

_____
Street Address, City and State

AGREEMENT

THIS AGREEMENT made as of the _____ day of _____ in the year _____ by and between the City of Quincy, Massachusetts, acting through its Department of Public Works, hereinafter called the "City" and: _____ with legal address and principle place of business at _____ _____ hereinafter called the "Contractor". The City and the Contractor, in consideration of the mutual covenants hereinafter set forth, agree as follows:

ARTICLE 1 WORK

1.1 Contractor shall perform the Work as specified or indicated in the Contract Documents. The Work is as described in Section 011000, Summary of Work.

ARTICLE 2 ENGINEER

2.1 The project design and construction documents have been prepared by EBI Consulting, Inc., 21 B Street, Burlington, MA 01803(Engineer).

2.2 EBI Consulting, Inc. in conjunction with the City of Quincy Engineer Department, 55 Sea Street, Quincy, Massachusetts will act as the Owner's representative, assume all duties and responsibilities, and have the rights and authority assigned to Engineer in the Contract Documents in connection with the completion of the Work in accordance with the Contract Documents.

2.3 The City may elect to implement a Resident Project Representative, to be determined, who will also have the rights and authority assigned to Engineer in the Contract Documents in connection with the completion of the Work in accordance with the Contract Documents.

ARTICLE 3 CONTRACT TIME

3.1 The total Contract Time to complete the project shall be 60 calendar days, commencing ten (10) calendar days following the effective date of this Agreement. No site work shall be allowed between Thanksgiving and March 15, without permission, in writing, from the City.

3.2 The Contractor agrees that the Work shall be prosecuted regularly, diligently, and uninterrupted and at such rate of progress as will insure full completion thereof within the Contract Time stated above. It is expressly understood and agreed, by and between the contractor and the City, that the Contract Time is reasonable for the completion of the Work, taking into consideration the average climatic range and usual business/commercial and industrial activities prevailing in this locality.

ARTICLE 4 CONTRACT PRICE

4.1 The City will pay the contractor for performance of the Work in accordance with the Contract Documents, in current funds at the itemized unit or lump sum prices of work items, a total agreed sum of $_____ (state the total amount in words):

_____

as submitted in the Contractor's Bid Form attached to the Agreement.

ARTICLE 5 APPLICATIONS FOR PAYMENT

5.1 Applications for payment shall be submitted by the Contractor and processed by the Engineer in accordance with the Conditions of the Contract included in the Contract Documents.

ARTICLE 6 PROGRESS AND FINAL PAYMENTS

6.1 The City will make progress payments on account of the Contract Price on the basis of the Contractor's Application for Payment, as recommended by the Engineer, monthly during construction as provided below. All progress payments will be on the basis of the progress of the Work measured by the schedule of values provided for in the Conditions of the Contract.

6.2 The City will make progress and final payments as provided for in the Conditions of the Contract and in accordance with the applicable Massachusetts General Laws.

ARTICLE 7 LIQUIDATED DAMAGES

7.1 The City and the Contractor recognize that time is of the essence for this Agreement and that the City will suffer financial loss if the Work is not completed within the Contract Time specified in Article 3 above, plus any extensions thereof allowed in accordance with Article 12 of the General Conditions. They also recognize the delays, expense and difficulties involved in providing, in a legal or arbitration proceeding, the actual loss suffered by the City if the Work is not completed on time. Accordingly, instead of requiring any such proof, the City and the Contractor agree that as liquidated damages or delay (but not as a penalty) the Contractor shall pay the City $ 1,200.00 per day for each calendar day of delay until the Work is complete.

7.2 Provided, that the Contractor shall not be charged with liquidated damages or any excess cost when the delay in completion of the Work is for reasons included in Article 12 of the General Conditions.

7.3 Provided further, that the Contractor shall furnish the City the required notification of such delays in accordance with the applicable Conditions of the Contract.

ARTICLE 8 ASSURANCE

8.1 The Contractor has familiarized himself with the nature and extent of the Contract Documents, Work, locality, and with all local conditions and Federal, State and local

laws, ordinances, rules and regulations that in any manner may affect cost, progress or performance of the Work.

8.2 The Contractor has studied carefully all reports of investigations and tests of sub-surface and latent physical conditions at the site or otherwise affecting cost, progress or performance of the Work which were relied upon by the Engineer in the preparation of the Drawings and Specifications and which have been identified in the Supplementary Conditions.

8.3 The Contractor has made or caused to be made examinations, investigations and tests and studies of such reports and related data in addition to those referred to in the above paragraph as he deems necessary for the performance of the work at the Contact Price within the Contact Time and in accordance with the other terms and conditions of the Contract Documents; and no additional examinations, investigations, tests, reports or similar data are or will be required by him for such purposes.

8.4 The Contractor has correlated the results of all such observations, examinations, tests, reports and data with the terms and conditions of the Contract Documents.

8.5 The Contractor has given the Engineer written notice of any conflict, error or discrepancy that he has discovered in the Contract Documents and the written resolution thereof by the Engineer is acceptable to the Contractor.

8.6 The Contractor agrees that the Contract Documents are sufficient in scope and detail to indicate and convey understanding of all terms and conditions for performance of the Work.

IN WITNESS WHEREOF, the parties hereto have executed, or caused to be executed, by their duly authorized officials, this Agreement in six (6) copies, each of which shall be deemed an original on the date first above written. The Party of the First Part agrees to pay to the Party of the Second Part, upon satisfactory completion and delivery of the aforementioned, the sum of:

Amount in Figures: $ _____

Amount in Words: _____

_____

WITNESS:

_____

OWNER: The City of Quincy

BY: _____
MAYOR

Approved as to form:

BY: _____
CITY SOLICITOR

BY:_____
COMMISSIONER OF PUBLIC WORKS

BY: _____
PURCHASING AGENT

CONTRACTOR:

P.O. # _____

Company Name: _____

Contract #: _____

BY: _____

Name: _____

The undersigned, in compliance with MGL, Chapter 44, Section 31C, certifies that an appropriation in the amount required for this contract is available.

Title: _____

Address: _____

_____

BY: _____
DIRECTOR OF MUNICIPAL FINANCE

Telephone: _____

NOTICE OF AWARD

TO:

PROJECT TITLE: _Town Brook Base Flow Recapture Project _____

The City has considered the Bid submitted by you for the above-described work in response to its Advertisements for Bids and Information for Bidders. You are hereby notified that your Bid in the amount **$ _____** has been accepted, provided you furnish the City with the required Certificates, Affidavits, Contractor's Performance and Payments Bonds and Certificate of Insurance within ten (10) days receipt of this notice to execute the Agreement. In case of failure to execute said Agreement and to furnish said bonds and documents as stipulated in the Bid Documents within ten (10) days from the date of receipt of this Notice, the City will be entitled to consider all your rights arising out of the City's acceptance of your Bid as abandoned and as a forfeiture of your bid bond. The City will also be entitled to such other rights as may be granted by law. You are required to return an acknowledged copy of the Notice of Award to the City.

Dated this the _____ day of_____20___.

BY:_____
Daniel G. Raymondi
Commissioner of Public Works

ACCEPTANCE OF NOTICE

Receipt of the above NOTICE OF AWARD is hereby acknowledged by:

_____
(Company Name)

Signature: _____ Date: _____

Print Name: _____ Title: _____

INTENTIONALLY BLANK

INDEMNITY AGREEMENT

In consideration of the award of Contract No._____

by the City of Quincy, hereinafter referred to as INDEMNITEE, to the CONTRACTOR/BIDDER:

_____

hereinafter referred to as INDEMNITOR, and for other good and valuable consideration, said INDEMNITOR agrees to hold INDEMNITEE, City of Quincy, and its various department and employees harmless from any and all liability, loss or damage that INDEMNITEE may suffer as the result of claims, demands, costs, including attorneys fees, or judgement or other actions against it by reason of any and all work done by or on behalf of the INDEMNITOR in connection with the above-referenced contract.

INDEMNITOR,

_____
By Duly Authorized Agent

Date:_____

INTENTIONALLY BLANK

CONTRACTOR'S CERTIFICATION

A Contractor will not be eligible for award of a contract unless he has submitted the following certification, which is deemed a part of the resulting contract.

_____ certifies that:

1. it intends to use the following listed construction trades in the work under the contract:

   _____

2. will comply with the minority manpower ratio and specific affirmative action steps contained herein; and

3. will obtain from each of its subcontractors and submit to the contracting administrating agency prior to the award of any subcontract under this contract the subcontractor certification required by these bid conditions.

_____
Contractor's Signature/Authorized Representative

B. SUBCONTRACTOR'S CERTIFICATION

Prior to the award of any subcontract, regardless of tier, the prospective subcontractor must execute and submit to the Prime Contractor the following certification, which will be deemed a part of the resulting subcontract.

_____ certifies that:

1. it tends to use the following listed construction trades in work under the subcontract:

   _____ ; and

2. will comply with the minority manpower ratio and specific affirmative action steps contained herein.

_____
Subcontractor's Signature

In order to ensure that said subcontractor's certification becomes a part of all subcontracts under the general contract, no subcontract shall be executed until an authorized representative of the state/municipal agency (or agencies) administering this project has determined, in writing, that said certification has been incorporated in such subcontract, regardless of tier. Any subcontract executed without such written approval may been deemed invalid.

INTENTIONALLY BLANK

NOTICE TO PROCEED

TO: _____ DATE:

_____ Project: Town Brook Base Flow Recapture

_____

You are hereby notified to commence WORK on or before _____

In accordance with contract documents the contract time is 60 calendar days. The date for completion of all work is therefore _____.

BY:_____

Name: Daniel G. Raymodi

Title: Commissioner of Public Works

ACCEPTANCE OF NOTICE

Receipt of the above NOTICE TO PROCEED is hereby acknowledged by:

_____

. (Company Name)

Signature: _____ Date:

Print Name: _____ Title:

INTENTIONALLY BLANK

Note: This form may be substituted with standard form issued by bonding agency.

PERFORMANCE BOND

KNOW ALL MEN BY THESE PRESENT: that

_____.
(Name of Contractor)

_____.
(Address of Contractor)

a _____, hereinafter called Principal, and
(corporation, partnership, individual)

_____.
(Name of Surety)

_____.
(Address of Surety)

hereinafter called Surety, are held and firmly bound unto _____.

_____.
(Name of Owner)

_____.
(Address of Owner)

hereinafter called OWNER, in the penal sum of: $ _____.

_____.
Dollars

in lawful money of the United States, for the payment of which sum will and truly to be made, we bind ourselves, successors, and assigns, jointly and severally, firmly by these present.

THE CONDITION OF THIS OBLIGATION is such that whereas, the Principal entered into a certain contract with the Owner, dated the ____ day of _____ 20__, a copy of which is hereto attached and made a part hereof for the construction of:

_____.

NOW, THEREFORE, if the Principal shall well, truly and faithfully perform its duties, all the undertakings, covenants, terms, conditions and agreements of said contract during the original term thereof, and any extensions thereof which may be granted by the City, with or without notice to the Surety and during the one year guarantee period, and if he shall satisfy all claims and demands incurred under such contract, and shall fully indemnify and save harmless the City from all costs and damages which it may suffer by reason of failure to do so, and shall reimburse and repay the City all outlay and expense which the City may incur in making good any default, then this obligation shall be void, otherwise to remain in full force and effect.

Note: This form may be substituted with standard form issued by bonding agency.

PROVIDED FURTHER, that said surety for value received hereby stipulates and agrees that no change, extension of time, alteration or addition to the terms of the Contract or to the WORK to be performed thereunder or the SPECIFICATIONS accompanying the same shall in any way affect its obligation on this BOND, and it does hereby waive notice of any such change, extension of time, alteration or addition to the terms of the Contract or to the WORK or to the SPECIFICATIONS.

PROVIDED FURTHER that no final settlement between the OWNER and the CONTRACTOR shall abridge the right of any beneficiary hereunder, whose claim may be unsatisfied.

IN WITNESS WHEREOF, this instrument is executed in __ counterparts, one of which shall be deemed an original, this the ___ day of _____ 20___.

ATTEST

_____ _____.
Principal's Secretary Principal

[SEAL] BY_____.

_____.
(Address)

_____ _____.
(Witness as to Principal)

_____.
(Address)

_____ _____.
(Surety)

ATTEST:

_____.
(Surety Secretary)

[SEAL]

_____ BY:_____.
(Witness to Surety) (Attorney-In-Fact)

_____ _____.
(Address) (Address)

_____ _____.

NOTE: Date of Bond must not be prior to date of Contract. If Contractor is Partnership, all partners should execute bond.

IMPORTANT: Surety companies executing bonds must appear on the Treasury Department's most current list (Circular 570 as amended) and be authorized to transact business in the State of projects' location.

Note: This form may be substituted with standard form issued by bonding agency.

PAYMENT BOND

KNOW ALL MEN BY THESE PRESENT: that

_____.
(Name of Contractor)

_____.
(Address of Contractor)

a _____, hereinafter called Principal, and
(corporation, partnership, individual)

_____.
(Name of Surety)

_____.
(Address of Surety)

hereinafter called Surety, are held and firmly bound unto _____.

_____.
(Name of Owner)

_____.
(Address of Owner)

hereinafter called OWNER, in the penal sum of: $ _____.

_____.
(Dollars)

in lawful money of the United States, for the payment of which sum will and truly to be made, we bind ourselves, successors, and assigns, jointly and severally, firmly by these present.

THE CONDITION OF THIS OBLIGATION is such that whereas, the Principal entered into a certain contract with the Owner, dated the ____ day of _____ 20___, a copy of which is hereto attached and made a part hereof for the construction of:

_____.

NOW, THEREFORE, if the Principal shall promptly make payment to all persons, firms, subcontractors, and corporations furnishing materials for or performing authorized extension or modification thereof, including all amounts due for materials, lubricants, oil, gasoline, coal and coke, repairs on machinery, equipment and tools, consumed or used in connection with the construction of such WORK, and all insurance premiums on said WORK, and for all labor, performed in such WORK whether by SUBCONTRACTOR or otherwise, then this obligation shall be void, otherwise to remain in full force and effect.

Note: This form may be substituted with standard form issued by bonding agency.

PROVIDED FURTHER, that said surety for value received hereby stipulates and agrees that no change, extension of time, alteration or addition to the terms of the Contract or to the WORK to be performed thereunder or the SPECIFICATIONS accompanying the same shall in any way affect its obligation on this BOND, and it does hereby waive notice of any such change, extension of time, alteration or addition to the terms of the Contract or to the WORK or to the SPECIFICATIONS.

PROVIDED FURTHER that no final settlement between the OWNER and the CONTRACTOR shall abridge the right of any beneficiary hereunder, whose claim may be unsatisfied.

IN WITNESS WHEREOF, this instrument is executed in __ counterparts, one of which shall be deemed an original, this the ___ day of _____ 20___.

ATTEST

_____ _____.
Principal's Secretary Principal

[SEAL] BY_____.

_____.
(Address)

_____ _____.
(Witness as to Principal)

_____.
(Address)

_____ _____.
(Surety)

ATTEST:

_____.
(Surety Secretary)

[SEAL]

_____ BY:_____.
(Witness to Surety) (Attorney-In-Fact)

_____ _____.
(Address) (Address)

_____ _____.

NOTE: Date of Bond must not be prior to date of Contract. If Contractor is Partnership, all partners should execute bond.

IMPORTANT: Surety companies executing bonds must appear on the Treasury Department's most current list (Circular 570 as amended) and be authorized to transact business in the State of projects' location.

CERTIFICATE OF INSURANCE

This is to certify that the _____ (Company) has issued the policies listed below, that these policies are written in accordance with the Company's standard policies and endorsements, except as indicated below or as noted in the attachments herewith, which policies and endorsements will be made available to ENGINEER and OWNER UPON request, that they provide coverage and limits of liability shown with respect to the insurance indicated that they are in force on this date, that all deductible amounts are indicated below, and that this Certificate is furnish in accordance with and for the purpose of satisfying the requirements of OWNER and ENGINEER in connection with the award and performance of a contract or agreement between_____

_____

_____(OWNER)and

1. Name of Insured_____.
2. Address of Insured _____.
3. Location and Description of Work _____.

_____.

Project Contract No.

					Coverage and Limits of Liability (at least as shown below	
					Bodily Injury Liability	Property Damage Liability
Policy Number	Effective Date	Expiration Date	Each Occurrence	Each Aggregate	Occurrence	Aggregate
A. Owner's Protective Liability has been issued at the expense of Above Insured to_____Owner.						
_____	_____	_____	$1,000,000.	$1,000,000.	$1,000,000.	$1,000,000.
B. Comprehensive General Liability						
_____	_____	_____	$1,000,000.	$1,000,000.	$1,000,000.	$1,000,000.

Including: 1. Operations Premises 2. Contractor's Protective 3.Contractual as Below 4.Products/Completed Operations 5. Personal Injury

Property Damage Ins.under policies A & B above includes Cover. for Explosion/Collapse/Underground Prop. Damage.

C. Auto Liability Including 1. Owner 2. Hired 3. Non-owned			Each Person $1,000,000.00	Each Accident $1,000,000.	Each Accident $1,000,000.00
D. Workmen's Compensation			Compensation Statutory State's Coverage B Limits $1,000,000. if applicable		
E. Builder's Risk Insurance - All Risk Completed Value form			As called for in Contract or Agreement		

CONTRACTUAL LIABILITY

CONTRACTOR shall at all times indemnify and save harmless OWNER, ENGINEER and their respective officers, agents and employees on account of any and all claims, damages, losses, litigation, expenses, counsel fees and compensation arising out of injuries (including death) sustained by or alleged to have been sustained by the officers, agents and employees of said OWNER or ENGINEER or of CONTRACTOR, his subcontractors, or material men, and from injuries (including death sustained by or alleged to have been sustained by the public, any or all persons on or near the Work, or by any other person or property, real or personal (including property of said OWNER or ENGINEER caused in whole or in part by the acts, omissions, or neglect of CONTRACTOR including but not limited to any neglect in safeguarding the work or through the use of unacceptable materials in contracting the Work by CONTRACTOR, any subcontractor, material man, or anyone directly or indirectly employed by them or any of them while engaged in the performance of the contract, including the entire elapsed time from the date ordered to start work or the actual start, whichever occurs first, until completion of the one year correction period, as certified by OWNER or ENGINEER.

Policies A, B, C & D shall remain in effect during the one year correction period.

Such insurancer as is herein certified applies to all operations of the insured in connection with, and necessary and incidental to, the work herein described at the locations stated.

It is hereby understood and agreed that the above policies will not be restricted, suspended, materially changed, nor canceled without 15 days advance notice by registered mail to OWNER and ENGINEER._____.

_____ _____.

Authorized Representative Signature Address

INTENTIONALLY BLANK

CITY OF QUINCY
Purchasing Department
1305 Hancock Street, Quincy, MA 02169

Phone: 376-1060
Fax: 376-1074

TAX COMPLIANCE CERTIFICATE
MASS. GENERAL LAWS, CH. 62c, s: 49A(b)

I hereby certify that I have complied with all laws of the Commonwealth of Massachusetts Relating to taxes.

Signed under the pains and penalties of perjury.

(1) Individual Contractor _____
Contractor's Name and Signature)

(2) Corporation, Association or Partnership _____
(Contractor's Name)

Federal Tax ID Number, or Social Security Number _____

By: _____
(Authorized Signature)

Note to Contractor: Please sign at (1) or (2), whichever applies.

1983 Enactment. St. 1983, c. 233, § 35, by § 101 made effective upon passage, was approved July 1, 1983. Emergency declaration by the Governor was filed on the same date.

Library References
Licenses ← 22. S.J.S. Licenses § 34, 38, 39.

§ 48. Liability of lessee for tax due from lessor

The lessee of real estate or tangible personal property of any corporation, company or association subject to taxation under chapter sixty-three shall also be liable for the payment of the tax due from the lessor under chapter sixty-three. Upon such payment, the lessee may, in the absence of an agreement to the contrary, retain it out of the rent of the property, or recover it in an action against the lessor.

Added by St. 1976, c. 415, §22.

1976 Enactment. This section was derived from c. 63, §74.

§ 49. Information for collection of taxes; injunction

Taxes due from a company, association or corporation may be collected by an information brought in the supreme judicial court by the attorney general at the relation of the commissioner. The court may issue an injunction upon such information, restraining the further prosecution of the business of the company, association or corporation until such taxes, with interest and costs thereon, have been paid and until the returns required by this chapter have been filed.

Added by St. 1976, c. 415, §22.

1976 Enactment. This section was derived from c. 63. § 745; c. 64D, § 5.

Cross References

Penalties and forfeitures imposed by chapter 63 or § 74 of this chapter, collection remedies under this section and §47 of this chapter, see c. 63, §80.

§ 49A. Certification of compliance with tax laws as prerequisite to obtaining license or governmental contract

(a) Any person applying to any department, board, commission, division, authority, district or other agency of the commonwealth or any subdivision of the commonwealth, including a city, town or district, for a right or license to conduct a profession, trade or business, or for the renewal of such right or license, shall certify upon such application, under penalties or perjury, that he has complied with all laws of the commonwealth relating to taxes. Such right or license shall not be issued or renewed unless such certification is made.

(b) No contract or other agreement for the purposes of providing goods, services or real estate space to any of the foregoing agencies shall be entered into, renewed or extended with any person unless such person certifies in writing, under penalties of perjury, that he had complied with all laws of the commonwealth relating to taxes.

(c) Any such agency, which has been notified by the commissioner pursuant to section forty-seven A that a person who holds a license or certificate of authority issued by such agency or who has agreed to furnish goods, services or real estate space to such agency has neglected or refused to file any returns or to pay any tax required under this chapter and that such person has not filed in good faith a pending application for abatement of such tax or a pending petition before the appellate tax board contesting such tax, shall refuse to reissue, renew or extend such license, certificate of authority, contract or agreement until the agency receives a certificate issued by the commissioner that the person is in good standing with respect to any and all returns due and taxes payable to the commissioner as of the date of issuance of said certificate, including all returns and taxes referenced in the initial notification.

Added by St. 1983, c. 233, §36. Amended by St. 1986, c. 557, § 72.

1983 Enactment. St. 1983, c. 233, §36, by §101 made effective upon passage, was approved July 1, 1983. Emergency declaration by the Governor was filed on the same date.

1985 Amendment. St. 1985, c. 593, §22, purported to amend par. (c) by substituting "forty-seven A" for "forty-seven" as appearing in line 14 of the 1984 GLM but apparently intended to substitute such amendment where appearing in line 15 of the 1984 GLM.

St. 1985, c. 593, was approved Dec. 18, 1985. Emergency declaration by the Governor was filed on the same date.

St.1986, c. 557, § 213, an emergency act, approved Dec. 8, 1986, repealed St. 1985, c. 593, § 22.

1986 Legislation

St. 1986, c. 557, §72, an emergency act, approved Dec. 8, 1986, in par. (c) substituted "forty-seven A" for "forty-seven" as apparently intended by the 1985 amendment.

Library References Licenses ← 22. C.J. S. Licenses §§ 34, 38, 39.

This document has important legal consequences; consultation with an attorney is encouraged with respect to its use or modification. This document should be adapted to the particular circumstances of the contemplated Project and the Controlling Law.

STANDARD GENERAL CONDITIONS OF THE CONSTRUCTION CONTRACT

Prepared by

ENGINEERS JOINT CONTRACT DOCUMENTS COMMITTEE

and

Issued and Published Jointly By

PROFESSIONAL ENGINEERS IN PRIVATE PRACTICE
a practice division of the
NATIONAL SOCIETY OF PROFESSIONAL ENGINEERS

AMERICAN COUNCIL OF ENGINEERING COMPANIES

AMERICAN SOCIETY OF CIVIL ENGINEERS

This document has been approved and endorsed by

The Associated General Contractors of America

Construction Specifications Institute

Copyright © 2002 National Society of Professional Engineers for EJCDC. All rights reserved.

Copyright ©2002

National Society of Professional Engineers
1420 King Street, Alexandria, VA 22314

American Council of Engineering Companies
1015 15th Street, N.W., Washington, DC 20005

American Society of Civil Engineers
1801 Alexander Bell Drive, Reston, VA 20191-4400

These General Conditions have been prepared for use with the Suggested Forms of Agreement Between Owner and Contractor Nos. C-520 or C-525 (2002 Editions). Their provisions are interrelated and a change in one may necessitate a change in the other. Comments concerning their usage are contained in the EJCDC Construction Documents, General and Instructions (No. C-001) (2002 Edition). For guidance in the preparation of Supplementary Conditions, see Guide to the Preparation of Supplementary Conditions (No. C-800) (2002 Edition).

Copyright © 2002 National Society of Professional Engineers for EJCDC. All rights reserved.

TABLE OF CONTENTS

Page

ARTICLE 1 - DEFINITIONS AND TERMINOLOGY 6
1.01 *Defined Terms* 6
1.02 *Terminology* 8
ARTICLE 2 - PRELIMINARY MATTERS 9
2.01 *Delivery of Bonds and Evidence of Insurance* 9
2.02 *Copies of Documents* 9
2.03 *Commencement of Contract Times; Notice to Proceed* 9
2.04 *Starting the Work* 9
2.05 *Before Starting Construction* 9
2.06 *Preconstruction Conference* 9
2.07 *Initial Acceptance of Schedules* 9
ARTICLE 3 - CONTRACT DOCUMENTS: INTENT, AMENDING, REUSE 10
3.01 *Intent* 10
3.02 *Reference Standards* 10
3.03 *Reporting and Resolving Discrepancies* 10
3.04 *Amending and Supplementing Contract Documents* 11
3.05 *Reuse of Documents* 11
3.06 *Electronic Data* 11
ARTICLE 4 - AVAILABILITY OF LANDS; SUBSURFACE AND PHYSICAL CONDITIONS; HAZARDOUS ENVIRONMENTAL CONDITIONS; REFERENCE POINTS 11
4.01 *Availability of Lands* 11
4.02 *Subsurface and Physical Conditions* 12
4.03 *Differing Subsurface or Physical Conditions* 12
4.04 *Underground Facilities* 13
4.05 *Reference Points* 13
4.06 *Hazardous Environmental Condition at Site* 13
ARTICLE 5 - BONDS AND INSURANCE 14
5.01 *Performance, Payment, and Other Bonds* 14
5.02 *Licensed Sureties and Insurers* 15
5.03 *Certificates of Insurance* 15
5.04 *Contractor's Liability Insurance* 15
5.05 *Owner's Liability Insurance* 16
5.06 *Property Insurance* 16
5.07 *Waiver of Rights* 17
5.08 *Receipt and Application of Insurance Proceeds* 17
5.09 *Acceptance of Bonds and Insurance; Option to Replace* 17
5.10 *Partial Utilization, Acknowledgment of Property Insurer* 18
ARTICLE 6 - CONTRACTOR'S RESPONSIBILITIES 18
6.01 *Supervision and Superintendence* 18
6.02 *Labor; Working Hours* 18
6.03 *Services, Materials, and Equipment* 18
6.04 *Progress Schedule* 18
6.05 *Substitutes and "Or-Equals"* 19
6.06 *Concerning Subcontractors, Suppliers, and Others* 20
6.07 *Patent Fees and Royalties* 21
6.08 *Permits* 21
6.09 *Laws and Regulations* 21
6.10 *Taxes* 22
6.11 *Use of Site and Other Areas* 22
6.12 *Record Documents* 22
6.13 *Safety and Protection* 22
6.14 *Safety Representative* 23
6.15 *Hazard Communication Programs* 23

Copyright © 2002 National Society of Professional Engineers for EJCDC. All rights reserved.

6.16 *Emergencies* 23
6.17 *Shop Drawings and Samples* 23
6.18 *Continuing the Work* 24
6.19 *Contractor's General Warranty and Guarantee* 24
6.20 *Indemnification* 24
6.21 *Delegation of Professional Design Services* 25
ARTICLE 7 - OTHER WORK AT THE SITE 25
7.01 *Related Work at Site* 25
7.02 *Coordination* 26
7.03 *Legal Relationships* 26
ARTICLE 8 - OWNER'S RESPONSIBILITIES 26
8.01 *Communications to Contractor* 26
8.02 *Replacement of Engineer* 26
8.03 *Furnish Data* 26
8.04 *Pay When Due* 26
8.05 *Lands and Easements; Reports and Tests* 26
8.06 *Insurance* 26
8.07 *Change Orders* 26
8.08 *Inspections, Tests, and Approvals* 26
8.09 *Limitations on Owner's Responsibilities* 27
8.10 *Undisclosed Hazardous Environmental Condition* 27
8.11 *Evidence of Financial Arrangements* 27
ARTICLE 9 - ENGINEER'S STATUS DURING CONSTRUCTION 27
9.01 *Owner's Representative* 27
9.02 *Visits to Site* 27
9.03 *Project Representative* 27
9.04 *Authorized Variations in Work* 27
9.05 *Rejecting Defective Work* 27
9.06 *Shop Drawings, Change Orders and Payments* 28
9.07 *Determinations for Unit Price Work* 28
9.08 *Decisions on Requirements of Contract Documents and Acceptability of Work* 28
9.09 *Limitations on Engineer's Authority and Responsibilities* 28
ARTICLE 10 - CHANGES IN THE WORK; CLAIMS 28
10.01 *Authorized Changes in the Work* 28
10.02 *Unauthorized Changes in the Work* 29
10.03 *Execution of Change Orders* 29
10.04 *Notification to Surety* 29
10.05 *Claims* 29
ARTICLE 11 - COST OF THE WORK; ALLOWANCES; UNIT PRICE WORK 30
11.01 *Cost of the Work* 30
11.02 *Allowances* 31
11.03 *Unit Price Work* 31
ARTICLE 12 - CHANGE OF CONTRACT PRICE; CHANGE OF CONTRACT TIMES 32
12.01 *Change of Contract Price* 32
12.02 *Change of Contract Times* 33
12.03 *Delays* 33
ARTICLE 13 - TESTS AND INSPECTIONS; CORRECTION, REMOVAL OR ACCEPTANCE OF DEFECTIVE WORK 33
13.01 *Notice of Defects* 33
13.02 *Access to Work* 33
13.03 *Tests and Inspections* 33
13.04 *Uncovering Work* 34
13.05 *Owner May Stop the Work* 34
13.06 *Correction or Removal of Defective Work* 34
13.07 *Correction Period* 34
13.08 *Acceptance of Defective Work* 35
13.09 *Owner May Correct Defective Work* 35
ARTICLE 14 - PAYMENTS TO CONTRACTOR AND COMPLETION 36
14.01 *Schedule of Values* 36
14.02 *Progress Payments* 36
14.03 *Contractor's Warranty of Title* 37
14.04 *Substantial Completion* 37

Copyright © 2002 National Society of Professional Engineers for EJCDC. All rights reserved.

14.05 *Partial Utilization* 38
14.06 *Final Inspection* 38
14.07 *Final Payment* 38
14.08 *Final Completion Delayed* 39
14.09 *Waiver of Claims* 39
ARTICLE 15 - SUSPENSION OF WORK AND TERMINATION 39
15.01 *Owner May Suspend Work* 39
15.02 *Owner May Terminate for Cause* 39
15.03 *Owner May Terminate For Convenience* 40
15.04 *Contractor May Stop Work or Terminate* 40
ARTICLE 16 - DISPUTE RESOLUTION 41
16.01 *Methods and Procedures* 41
ARTICLE 17 - MISCELLANEOUS 41
17.01 *Giving Notice* 41
17.02 *Computation of Times* 41
17.03 *Cumulative Remedies* 41
17.04 *Survival of Obligations* 41
17.05 *Controlling Law* 41
17.06 *Headings* 41

Copyright © 2002 National Society of Professional Engineers for EJCDC. All rights reserved.

GENERAL CONDITIONS

ARTICLE 1 - DEFINITIONS AND TERMINOLOGY

1.01 *Defined Terms*

A. Wherever used in the Bidding Requirements or Contract Documents and printed with initial capital letters, the terms listed below will have the meanings indicated which are applicable to both the singular and plural thereof. In addition to terms specifically defined, terms with initial capital letters in the Contract Documents include references to identified articles and paragraphs, and the titles of other documents or forms.

1. *Addenda*--Written or graphic instruments issued prior to the opening of Bids which clarify, correct, or change the Bidding Requirements or the proposed Contract Documents.

2. *Agreement*--The written instrument which is evidence of the agreement between Owner and Contractor covering the Work.

3. *Application for Payment*--The form acceptable to Engineer which is to be used by Contractor during the course of the Work in requesting progress or final payments and which is to be accompanied by such supporting documentation as is required by the Contract Documents.

4. *Asbestos*--Any material that contains more than one percent asbestos and is friable or is releasing asbestos fibers into the air above current action levels established by the United States Occupational Safety and Health Administration.

5. *Bid*--The offer or proposal of a Bidder submitted on the prescribed form setting forth the prices for the Work to be performed.

6. *Bidder*--The individual or entity who submits a Bid directly to Owner.

7. *Bidding Documents*--The Bidding Requirements and the proposed Contract Documents (including all Addenda).

8. *Bidding Requirements*--The Advertisement or Invitation to Bid, Instructions to Bidders, bid security of acceptable form, if any, and the Bid Form with any supplements.

9. *Change Order*--A document recommended by Engineer which is signed by Contractor and Owner and authorizes an addition, deletion, or revision in the Work or an adjustment in the Contract Price or the Contract Times, issued on or after the Effective Date of the Agreement.

10. *Claim*--A demand or assertion by Owner or Contractor seeking an adjustment of Contract Price or Contract Times, or both, or other relief with respect to the terms of the Contract. A demand for money or services by a third party is not a Claim.

11. *Contract*--The entire and integrated written agreement between the Owner and Contractor concerning the Work. The Contract supersedes prior negotiations, representations, or agreements, whether written or oral.

12. *Contract Documents*-- Those items so designated in the Agreement. Only printed or hard copies of the items listed in the Agreement are Contract Documents. Approved Shop Drawings, other Contractor's submittals, and the reports and drawings of subsurface and physical conditions are not Contract Documents.

13. *Contract Price*--The moneys payable by Owner to Contractor for completion of the Work in accordance with the Contract Documents as stated in the Agreement (subject to the provisions of Paragraph 11.03 in the case of Unit Price Work).

14. *Contract Times*--The number of days or the dates stated in the Agreement to: (i) achieve Milestones, if any, (ii) achieve Substantial Completion; and (iii) complete the Work so that it is ready for final payment as evidenced by Engineer's written recommendation of final payment.

15. *Contractor*--The individual or entity with whom Owner has entered into the Agreement.

16. *Cost of the Work*--See Paragraph 11.01.A for definition.

17. *Drawings*--That part of the Contract Documents prepared or approved by Engineer which graphically shows the scope, extent, and character of the Work to be performed by Contractor. Shop Drawings and other Contractor submittals are not Drawings as so defined.

18. *Effective Date of the Agreement*--The date indicated in the Agreement on which it becomes effective, but if no such date is indicated, it means the date on which the Agreement is signed and delivered by the last of the two parties to sign and deliver.

19. *Engineer*--The individual or entity named as such in the Agreement.

Copyright © 2002 National Society of Professional Engineers for EJCDC. All rights reserved.

20. *Field Order*--A written order issued by Engineer which requires minor changes in the Work but which does not involve a change in the Contract Price or the Contract Times.

21. *General Requirements*--Sections of Division 1 of the Specifications. The General Requirements pertain to all sections of the Specifications.

22. *Hazardous Environmental Condition*--The presence at the Site of Asbestos, PCBs, Petroleum, Hazardous Waste, or Radioactive Material in such quantities or circumstances that may present a substantial danger to persons or property exposed thereto in connection with the Work.

23. *Hazardous Waste*--The term Hazardous Waste shall have the meaning provided in Section 1004 of the Solid Waste Disposal Act (42 USC Section 6903) as amended from time to time.

24. *Laws and Regulations; Laws or Regulations*--Any and all applicable laws, rules, regulations, ordinances, codes, and orders of any and all governmental bodies, agencies, authorities, and courts having jurisdiction.

25. *Liens*--Charges, security interests, or encumbrances upon Project funds, real property, or personal property.

26. *Milestone*--A principal event specified in the Contract Documents relating to an intermediate completion date or time prior to Substantial Completion of all the Work.

27. *Notice of Award*--The written notice by Owner to the Successful Bidder stating that upon timely compliance by the Successful Bidder with the conditions precedent listed therein, Owner will sign and deliver the Agreement.

28. *Notice to Proceed*--A written notice given by Owner to Contractor fixing the date on which the Contract Times will commence to run and on which Contractor shall start to perform the Work under the Contract Documents.

29. *Owner*--The individual or entity with whom Contractor has entered into the Agreement and for whom the Work is to be performed.

30. *PCBs*--Polychlorinated biphenyls.

31. *Petroleum*--Petroleum, including crude oil or any fraction thereof which is liquid at standard conditions of temperature and pressure (60 degrees Fahrenheit and 14.7 pounds per square inch absolute), such as oil, petroleum, fuel oil, oil sludge, oil refuse, gasoline, kerosene, and oil mixed with other non-Hazardous Waste and crude oils.

32. *Progress Schedule*--A schedule, prepared and maintained by Contractor, describing the sequence and duration of the activities comprising the Contractor's plan to accomplish the Work within the Contract Times.

33. *Project*--The total construction of which the Work to be performed under the Contract Documents may be the whole, or a part.

34. *Project Manual*--The bound documentary information prepared for bidding and constructing the Work. A listing of the contents of the Project Manual, which may be bound in one or more volumes, is contained in the table(s) of contents.

35. *Radioactive Material*--Source, special nuclear, or byproduct material as defined by the Atomic Energy Act of 1954 (42 USC Section 2011 et seq.) as amended from time to time.

36. *Related Entity* -- An officer, director, partner, employee, agent, consultant, or subcontractor.

37. *Resident Project Representative*--The authorized representative of Engineer who may be assigned to the Site or any part thereof.

38. *Samples*--Physical examples of materials, equipment, or workmanship that are representative of some portion of the Work and which establish the standards by which such portion of the Work will be judged.

39. *Schedule of Submittals*--A schedule, prepared and maintained by Contractor, of required submittals and the time requirements to support scheduled performance of related construction activities.

40. *Schedule of Values*--A schedule, prepared and maintained by Contractor, allocating portions of the Contract Price to various portions of the Work and used as the basis for reviewing Contractor's Applications for Payment.

41. *Shop Drawings*--All drawings, diagrams, illustrations, schedules, and other data or information which are specifically prepared or assembled by or for Contractor and submitted by Contractor to illustrate some portion of the Work.

42. *Site*--Lands or areas indicated in the Contract Documents as being furnished by Owner upon which the Work is to be performed, including rights-of-way and easements for access thereto, and such other lands furnished by Owner which are designated for the use of Contractor.

43. *Specifications*--That part of the Contract Documents consisting of written requirements for materials, equipment, systems, standards and workmanship as applied to the Work, and certain

Copyright © 2002 National Society of Professional Engineers for EJCDC. All rights reserved.

administrative requirements and procedural matters applicable thereto.

44. *Subcontractor*--An individual or entity having a direct contract with Contractor or with any other Subcontractor for the performance of a part of the Work at the Site.

45. *Substantial Completion*--The time at which the Work (or a specified part thereof) has progressed to the point where, in the opinion of Engineer, the Work (or a specified part thereof) is sufficiently complete, in accordance with the Contract Documents, so that the Work (or a specified part thereof) can be utilized for the purposes for which it is intended. The terms "substantially complete" and "substantially completed" as applied to all or part of the Work refer to Substantial Completion thereof.

46. *Successful Bidder*--The Bidder submitting a responsive Bid to whom Owner makes an award.

47. *Supplementary Conditions*--That part of the Contract Documents which amends or supplements these General Conditions.

48. *Supplier*--A manufacturer, fabricator, supplier, distributor, materialman, or vendor having a direct contract with Contractor or with any Subcontractor to furnish materials or equipment to be incorporated in the Work by Contractor or any Subcontractor.

49. *Underground Facilities*--All underground pipelines, conduits, ducts, cables, wires, manholes, vaults, tanks, tunnels, or other such facilities or attachments, and any encasements containing such facilities, including those that convey electricity, gases, steam, liquid petroleum products, telephone or other communications, cable television, water, wastewater, storm water, other liquids or chemicals, or traffic or other control systems.

50. *Unit Price Work*--Work to be paid for on the basis of unit prices.

51. *Work*--The entire construction or the various separately identifiable parts thereof required to be provided under the Contract Documents. Work includes and is the result of performing or providing all labor, services, and documentation necessary to produce such construction, and furnishing, installing, and incorporating all materials and equipment into such construction, all as required by the Contract Documents.

52. *Work Change Directive*--A written statement to Contractor issued on or after the Effective Date of the Agreement and signed by Owner and recommended by Engineer ordering an addition, deletion, or revision in the Work, or responding to differing or unforeseen subsurface or physical conditions under which the Work is to be performed or to emergencies. A Work Change Directive will not change the Contract Price or the Contract Times but is evidence that the parties expect that the change ordered or documented by a Work Change Directive will be incorporated in a subsequently issued Change Order following negotiations by the parties as to its effect, if any, on the Contract Price or Contract Times.

1.02 *Terminology*

A. The following words or terms are not defined but, when used in the Bidding Requirements or Contract Documents, have the following meaning.

B. *Intent of Certain Terms or Adjectives*

1. The Contract Documents include the terms "as allowed," "as approved," "as ordered", "as directed" or terms of like effect or import to authorize an exercise of professional judgment by Engineer. In addition, the adjectives "reasonable," "suitable," "acceptable," "proper," "satisfactory," or adjectives of like effect or import are used to describe an action or determination of Engineer as to the Work. It is intended that such exercise of professional judgment, action or determination will be solely to evaluate, in general, the Work for compliance with the requirements of and information in the Contract Documents and conformance with the design concept of the completed Project as a functioning whole as shown or indicated in the Contract Documents (unless there is a specific statement indicating otherwise). The use of any such term or adjective is not intended to and shall not be effective to assign to Engineer any duty or authority to supervise or direct the performance of the Work or any duty or authority to undertake responsibility contrary to the provisions of Paragraph 9.09 or any other provision of the Contract Documents.

C. *Day*

1. The word "day" means a calendar day of 24 hours measured from midnight to the next midnight.

D. *Defective*

1. The word "defective," when modifying the word "Work," refers to Work that is unsatisfactory, faulty, or deficient in that it:

a. does not conform to the Contract Documents, or

b. does not meet the requirements of any applicable inspection, reference standard, test, or approval referred to in the Contract Documents, or

c. has been damaged prior to Engineer's - recommendation of final payment (unless responsibility for the protection thereof has been assumed by Owner at Substantial Completion in accordance with Paragraph 14.04 or 14.05).

Copyright © 2002 National Society of Professional Engineers for EJCDC. All rights reserved.

E. *Furnish, Install, Perform, Provide*

1. The word "furnish," when used in connection with services, materials, or equipment, shall mean to supply and deliver said services, materials, or equipment to the Site (or some other specified location) ready for use or installation and in usable or operable condition.

2. The word "install," when used in connection with services, materials, or equipment, shall mean to put into use or place in final position said services, materials, or equipment complete and ready for intended use.

3. The words "perform" or "provide," when used in connection with services, materials, or equipment, shall mean to furnish and install said services, materials, or equipment complete and ready for intended use.

4. When "furnish," "install," "perform," or "provide" is not used in connection with services, materials, or equipment in a context clearly requiring an obligation of Contractor, "provide" is implied.

F. Unless stated otherwise in the Contract Documents, words or phrases which have a well-known technical or construction industry or trade meaning are used in the Contract Documents in accordance with such recognized meaning.

ARTICLE 2 - PRELIMINARY MATTERS

2.01 *Delivery of Bonds and Evidence of Insurance*

A. When Contractor delivers the executed counterparts of the Agreement to Owner, Contractor shall also deliver to Owner such bonds as Contractor may be required to furnish.

B. *Evidence of Insurance:* Before any Work at the Site is started, Contractor and Owner shall each deliver to the other, with copies to each additional insured identified in the Supplementary Conditions, certificates of insurance (and other evidence of insurance which either of them or any additional insured may reasonably request) which Contractor and Owner respectively are required to purchase and maintain in accordance with Article 5.

2.02 *Copies of Documents*

A. Owner shall furnish to Contractor up to ten printed or hard copies of the Drawings and Project Manual. Additional copies will be furnished upon request at the cost of reproduction.

2.03 *Commencement of Contract Times; Notice to Proceed*

A. The Contract Times will commence to run on the thirtieth day after the Effective Date of the Agreement or, if a Notice to Proceed is given, on the day indicated in the Notice to Proceed. A Notice to Proceed may be given at any time within 30 days after the Effective Date of the Agreement. In no event will the Contract Times commence to run later than the sixtieth day after the day of Bid opening or the thirtieth day after the Effective Date of the Agreement, whichever date is earlier.

2.04 *Starting the Work*

A. Contractor shall start to perform the Work on the date when the Contract Times commence to run. No Work shall be done at the Site prior to the date on which the Contract Times commence to run.

2.05 *Before Starting Construction*

A. *Preliminary Schedules:* Within 10 days after the Effective Date of the Agreement (unless otherwise specified in the General Requirements), Contractor shall submit to Engineer for timely review**:**

1. a preliminary Progress Schedule; indicating the times (numbers of days or dates) for starting and completing the various stages of the Work, including any Milestones specified in the Contract Documents;

2. a preliminary Schedule of Submittals; and

3. a preliminary Schedule of Values for all of the Work which includes quantities and prices of items which when added together equal the Contract Price and subdivides the Work into component parts in sufficient detail to serve as the basis for progress payments during performance of the Work. Such prices will include an appropriate amount of overhead and profit applicable to each item of Work.

2.06 *Preconstruction Conference*

A. Before any Work at the Site is started, a conference attended by Owner, Contractor, Engineer, and others as appropriate will be held to establish a working understanding among the parties as to the Work and to discuss the schedules referred to in Paragraph 2.05.A, procedures for handling Shop Drawings and other submittals, processing Applications for Payment, and maintaining required records.

2.07 *Initial Acceptance of Schedules*

A. At least 10 days before submission of the first Application for Payment a conference attended by Contractor, Engineer, and others as appropriate will be held to review for acceptability to Engineer as provided below the schedules submitted in accordance with Paragraph 2.05.A. Contractor shall have an additional 10 days to make corrections and adjustments and to complete and resubmit the schedules. No progress payment shall be made to Contractor until acceptable schedules are submitted to Engineer.

Copyright © 2002 National Society of Professional Engineers for EJCDC. All rights reserved.

1. The Progress Schedule will be acceptable to Engineer if it provides an orderly progression of the Work to completion within the Contract Times. Such acceptance will not impose on Engineer responsibility for the Progress Schedule, for sequencing, scheduling, or progress of the Work nor interfere with or relieve Contractor from Contractor's full responsibility therefor.

2. Contractor's Schedule of Submittals will be acceptable to Engineer if it provides a workable arrangement for reviewing and processing the required submittals.

3. Contractor's Schedule of Values will be acceptable to Engineer as to form and substance if it provides a reasonable allocation of the Contract Price to component parts of the Work.

ARTICLE 3 - CONTRACT DOCUMENTS: INTENT, AMENDING, REUSE

3.01 *Intent*

A. The Contract Documents are complementary; what is required by one is as binding as if required by all.

B. It is the intent of the Contract Documents to describe a functionally complete Project (or part thereof) to be constructed in accordance with the Contract Documents. Any labor, documentation, services, materials, or equipment that may reasonably be inferred from the Contract Documents or from prevailing custom or trade usage as being required to produce the intended result will be provided whether or not specifically called for at no additional cost to Owner.

C. Clarifications and interpretations of the Contract Documents shall be issued by Engineer as provided in Article 9.

3.02 *Reference Standards*

A. Standards, Specifications, Codes, Laws, and Regulations

1. Reference to standards, specifications, manuals, or codes of any technical society, organization, or association, or to Laws or Regulations, whether such reference be specific or by implication, shall mean the standard, specification, manual, code, or Laws or Regulations in effect at the time of opening of Bids (or on the Effective Date of the Agreement if there were no Bids), except as may be otherwise specifically stated in the Contract Documents.

2. No provision of any such standard, specification, manual or code, or any instruction of a Supplier shall be effective to change the duties or responsibilities of Owner, Contractor, or Engineer, or any of their subcontractors, consultants, agents, or employees from those set forth in the Contract Documents. No such provision or instruction shall be effective to assign to Owner, or Engineer, or any of, their Related Entities, any duty or authority to supervise or direct the performance of the Work or any duty or authority to undertake responsibility inconsistent with the provisions of the Contract Documents.

3.03 *Reporting and Resolving Discrepancies*

A. Reporting Discrepancies

1. *Contractor's Review of Contract Documents Before Starting Work*: Before undertaking each part of the Work, Contractor shall carefully study and compare the Contract Documents and check and verify pertinent figures therein and all applicable field measurements. Contractor shall promptly report in writing to Engineer any conflict, error, ambiguity, or discrepancy which Contractor may discover and shall obtain a written interpretation or clarification from Engineer before proceeding with any Work affected thereby.

2. *Contractor's Review of Contract Documents During Performance of Work*: If, during the performance of the Work, Contractor discovers any conflict, error, ambiguity, or discrepancy within the Contract Documents or between the Contract Documents and any provision of any Law or Regulation applicable to the performance of the Work or of any standard, specification, manual or code, or of any instruction of any Supplier, Contractor shall promptly report it to Engineer in writing. Contractor shall not proceed with the Work affected thereby (except in an emergency as required by Paragraph 6.16.A) until an amendment or supplement to the Contract Documents has been issued by one of the methods indicated in Paragraph 3.04.

3. Contractor shall not be liable to Owner or Engineer for failure to report any conflict, error, ambiguity, or discrepancy in the Contract Documents unless Contractor knew or reasonably should have known thereof.

B. Resolving Discrepancies

1. Except as may be otherwise specifically stated in the Contract Documents, the provisions of the Contract Documents shall take precedence in resolving any conflict, error, ambiguity, or discrepancy between the provisions of the Contract Documents and:

a. the provisions of any standard, specification, manual, code, or instruction (whether or not specifically incorporated by reference in the Contract Documents); or

b. the provisions of any Laws or Regulations applicable to the performance of the Work

Copyright © 2002 National Society of Professional Engineers for EJCDC. All rights reserved.

(unless such an interpretation of the provisions of the Contract Documents would result in violation of such Law or Regulation).

3.04 *Amending and Supplementing Contract Documents*

A. The Contract Documents may be amended to provide for additions, deletions, and revisions in the Work or to modify the terms and conditions thereof by either a Change Order or a Work Change Directive.

B. The requirements of the Contract Documents may be supplemented, and minor variations and deviations in the Work may be authorized, by one or more of the following ways:

1. A Field Order;

2. Engineer's approval of a Shop Drawing or Sample; (Subject to the provisions of Paragraph 6.17.D.3); or

3. Engineer's written interpretation or clarification.

3.05 *Reuse of Documents*

A. Contractor and any Subcontractor or Supplier or other individual or entity performing or furnishing all of the Work under a direct or indirect contract with Contractor, shall not:

1. have or acquire any title to or ownership rights in any of the Drawings, Specifications, or other documents (or copies of any thereof) prepared by or bearing the seal of Engineer or Engineer's consultants, including electronic media editions; or

2. reuse any of such Drawings, Specifications, other documents, or copies thereof on extensions of the Project or any other project without written consent of Owner and Engineer and specific written verification or adaption by Engineer.

B. The prohibition of this Paragraph 3.05 will survive final payment, or termination of the Contract. Nothing herein shall preclude Contractor from retaining copies of the Contract Documents for record purposes.

3.06 *Electronic Data*

A. Copies of data furnished by Owner or Engineer to Contractor or Contractor to Owner or Engineer that may be relied upon are limited to the printed copies (also known as hard copies). Files in electronic media format of text, data, graphics, or other types are furnished only for the convenience of the receiving party. Any conclusion or information obtained or derived from such electronic files will be at the user's sole risk. If there is a discrepancy between the electronic files and the hard copies, the hard copies govern.

B. Because data stored in electronic media format can deteriorate or be modified inadvertently or otherwise without authorization of the data's creator, the party receiving electronic files agrees that it will perform acceptance tests or procedures within 60 days, after which the receiving party shall be deemed to have accepted the data thus transferred. Any errors detected within the 60-day acceptance period will be corrected by the transferring party..

C. When transferring documents in electronic media format, the transferring party makes no representations as to long term compatibility, usability, or readability of documents resulting from the use of software application packages, operating systems, or computer hardware differing from those used by the data's creator.

ARTICLE 4 - AVAILABILITY OF LANDS; SUBSURFACE AND PHYSICAL CONDITIONS; HAZARDOUS ENVIRONMENTAL CONDITIONS; REFERENCE POINTS

4.01 *Availability of Lands*

A. Owner shall furnish the Site. Owner shall notify Contractor of any encumbrances or restrictions not of general application but specifically related to use of the Site with which Contractor must comply in performing the Work. Owner will obtain in a timely manner and pay for easements for permanent structures or permanent changes in existing facilities. If Contractor and Owner are unable to agree on entitlement to or on the amount or extent, if any, of any adjustment in the Contract Price or Contract Times, or both, as a result of any delay in Owner's furnishing the Site or a part thereof, Contractor may make a Claim therefor as provided in Paragraph 10.05.

B. Upon reasonable written request, Owner shall furnish Contractor with a current statement of record legal title and legal description of the lands upon which the Work is to be performed and Owner's interest therein as necessary for giving notice of or filing a mechanic's or construction lien against such lands in accordance with applicable Laws and Regulations.

C. Contractor shall provide for all additional lands and access thereto that may be required for temporary construction facilities or storage of materials and equipment.

Copyright © 2002 National Society of Professional Engineers for EJCDC. All rights reserved.

4.02 *Subsurface and Physical Conditions*

A. *Reports and Drawings:* The Supplementary Conditions identify:

1. those reports of explorations and tests of subsurface conditions at or contiguous to the Site that Engineer has used in preparing the Contract Documents; and

2. those drawings of physical conditions in or relating to existing surface or subsurface structures at or contiguous to the Site (except Underground Facilities) that Engineer has used in preparing the Contract Documents.

B. *Limited Reliance by Contractor on Technical Data Authorized:* Contractor may rely upon the general accuracy of the "technical data" contained in such reports and drawings, but such reports and drawings are not Contract Documents. Such "technical data" is identified in the Supplementary Conditions. Except for such reliance on such "technical data," Contractor may not rely upon or make any claim against Owner or Engineer, or any of their Related Entities with respect to:

1. the completeness of such reports and drawings for Contractor's purposes, including, but not limited to, any aspects of the means, methods, techniques, sequences, and procedures of construction to be employed by Contractor, and safety precautions and programs incident thereto; or

2. other data, interpretations, opinions, and information contained in such reports or shown or indicated in such drawings; or

3. any Contractor interpretation of or conclusion drawn from any "technical data" or any such other data, interpretations, opinions, or information.

4.03 *Differing Subsurface or Physical Conditions*

A. *Notice:* If Contractor believes that any subsurface or physical condition at or contiguous to the Site that is uncovered or revealed either:

1. is of such a nature as to establish that any "technical data" on which Contractor is entitled to rely as provided in Paragraph 4.02 is materially inaccurate; or

2. is of such a nature as to require a change in the Contract Documents; or

3. differs materially from that shown or indicated in the Contract Documents; or

4. is of an unusual nature, and differs materially from conditions ordinarily encountered and generally recognized as inherent in work of the character provided for in the Contract Documents;

then Contractor shall, promptly after becoming aware thereof and before further disturbing the subsurface or physical conditions or performing any Work in connection therewith (except in an emergency as required by Paragraph 6.16.A), notify Owner and Engineer in writing about such condition. Contractor shall not further disturb such condition or perform any Work in connection therewith (except as aforesaid) until receipt of written order to do so.

B. *Engineer's Review*: After receipt of written notice as required by Paragraph 4.03.A, Engineer will promptly review the pertinent condition, determine the necessity of Owner's obtaining additional exploration or tests with respect thereto, and advise Owner in writing (with a copy to Contractor) of Engineer's findings and conclusions.

C. Possible Price and Times Adjustments

1. The Contract Price or the Contract Times, or both, will be equitably adjusted to the extent that the existence of such differing subsurface or physical condition causes an increase or decrease in Contractor's cost of, or time required for, performance of the Work; subject, however, to the following:

a. such condition must meet any one or more of the categories described in Paragraph 4.03.A; and

b. with respect to Work that is paid for on a Unit Price Basis, any adjustment in Contract Price will be subject to the provisions of Paragraphs 9.07 and 11.03.

2. Contractor shall not be entitled to any adjustment in the Contract Price or Contract Times if:

a. Contractor knew of the existence of such conditions at the time Contractor made a final commitment to Owner with respect to Contract Price and Contract Times by the submission of a Bid or becoming bound under a negotiated contract; or

b. the existence of such condition could reasonably have been discovered or revealed as a result of any examination, investigation, exploration, test, or study of the Site and contiguous areas required by the Bidding Requirements or Contract Documents to be conducted by or for Contractor prior to Contractor's making such final commitment; or

Copyright © 2002 National Society of Professional Engineers for EJCDC. All rights reserved.

c. Contractor failed to give the written notice as required by Paragraph 4.03.A.

3. If Owner and Contractor are unable to agree on entitlement to or on the amount or extent, if any, of any adjustment in the Contract Price or Contract Times, or both, a Claim may be made therefor as provided in Paragraph 10.05. However, Owner and Engineer, and any of their Related Entities shall not be liable to Contractor for any claims, costs, losses, or damages (including but not limited to all fees and charges of engineers, architects, attorneys, and other professionals and all court or arbitration or other dispute resolution costs) sustained by Contractor on or in connection with any other project or anticipated project.

4.04 *Underground Facilities*

A. *Shown or Indicated:* The information and data shown or indicated in the Contract Documents with respect to existing Underground Facilities at or contiguous to the Site is based on information and data furnished to Owner or Engineer by the owners of such Underground Facilities, including Owner, or by others. Unless it is otherwise expressly provided in the Supplementary Conditions:

1. Owner and Engineer shall not be responsible for the accuracy or completeness of any such information or data; and

2. the cost of all of the following will be included in the Contract Price, and Contractor shall have full responsibility for:

a. reviewing and checking all such information and data,

b. locating all Underground Facilities shown or indicated in the Contract Documents,

c. coordination of the Work with the owners of such Underground Facilities, including Owner, during construction, and

d. the safety and protection of all such Underground Facilities and repairing any damage thereto resulting from the Work.

B. *Not Shown or Indicated*

1. If an Underground Facility is uncovered or revealed at or contiguous to the Site which was not shown or indicated, or not shown or indicated with reasonable accuracy in the Contract Documents, Contractor shall, promptly after becoming aware thereof and before further disturbing conditions affected thereby or performing any Work in connection therewith (except in an emergency as required by Paragraph 6.16.A), identify the owner of such Underground Facility and give written notice to that owner and to Owner and Engineer. Engineer will promptly review the Underground Facility and determine the extent, if any, to which a change is required in the Contract Documents to reflect and document the consequences of the existence or location of the Underground Facility. During such time, Contractor shall be responsible for the safety and protection of such Underground Facility.

2. If Engineer concludes that a change in the Contract Documents is required, a Work Change Directive or a Change Order will be issued to reflect and document such consequences. An equitable adjustment shall be made in the Contract Price or Contract Times, or both, to the extent that they are attributable to the existence or location of any Underground Facility that was not shown or indicated or not shown or indicated with reasonable accuracy in the Contract Documents and that Contractor did not know of and could not reasonably have been expected to be aware of or to have anticipated. If Owner and Contractor are unable to agree on entitlement to or on the amount or extent, if any, of any such adjustment in Contract Price or Contract Times, Owner or Contractor may make a Claim therefor as provided in Paragraph 10.05.

4.05 *Reference Points*

A. Owner shall provide engineering surveys to establish reference points for construction which in Engineer's judgment are necessary to enable Contractor to proceed with the Work. Contractor shall be responsible for laying out the Work, shall protect and preserve the established reference points and property monuments, and shall make no changes or relocations without the prior written approval of Owner. Contractor shall report to Engineer whenever any reference point or property monument is lost or destroyed or requires relocation because of necessary changes in grades or locations, and shall be responsible for the accurate replacement or relocation of such reference points or property monuments by professionally qualified personnel.

4.06 *Hazardous Environmental Condition at Site*

A. *Reports and Drawings:* Reference is made to the Supplementary Conditions for the identification of those reports and drawings relating to a Hazardous Environmental Condition identified at the Site, if any, that have been utilized by the Engineer in the preparation of the Contract Documents.

B. *Limited Reliance by Contractor on Technical Data Authorized:* Contractor may rely upon the general accuracy of the "technical data" contained in such reports and drawings, but such reports and drawings are not Contract Documents. Such "technical data" is identified in the Supplementary Conditions. Except for such reliance on such "technical data," Contractor may not rely upon or make any claim against Owner or Engineer, or any of their Related Entities with respect to:

Copyright © 2002 National Society of Professional Engineers for EJCDC. All rights reserved.

1. the completeness of such reports and drawings for Contractor's purposes, including, but not limited to, any aspects of the means, methods, techniques, sequences and procedures of construction to be employed by Contractor and safety precautions and programs incident thereto; or

2. other data, interpretations, opinions and information contained in such reports or shown or indicated in such drawings; or

3. any Contractor interpretation of or conclusion drawn from any "technical data" or any such other data, interpretations, opinions or information.

C. Contractor shall not be responsible for any Hazardous Environmental Condition uncovered or revealed at the Site which was not shown or indicated in Drawings or Specifications or identified in the Contract Documents to be within the scope of the Work. Contractor shall be responsible for a Hazardous Environmental Condition created with any materials brought to the Site by Contractor, Subcontractors, Suppliers, or anyone else for whom Contractor is responsible.

D. If Contractor encounters a Hazardous Environmental Condition or if Contractor or anyone for whom Contractor is responsible creates a Hazardous Environmental Condition, Contractor shall immediately: (i) secure or otherwise isolate such condition; (ii) stop all Work in connection with such condition and in any area affected thereby (except in an emergency as required by Paragraph 6.16.A); and (iii) notify Owner and Engineer (and promptly thereafter confirm such notice in writing). Owner shall promptly consult with Engineer concerning the necessity for Owner to retain a qualified expert to evaluate such condition or take corrective action, if any.

E. Contractor shall not be required to resume Work in connection with such condition or in any affected area until after Owner has obtained any required permits related thereto and delivered to Contractor written notice: (i) specifying that such condition and any affected area is or has been rendered safe for the resumption of Work; or (ii) specifying any special conditions under which such Work may be resumed safely. If Owner and Contractor cannot agree as to entitlement to or on the amount or extent, if any, of any adjustment in Contract Price or Contract Times, or both, as a result of such Work stoppage or such special conditions under which Work is agreed to be resumed by Contractor, either party may make a Claim therefor as provided in Paragraph 10.05.

F. If after receipt of such written notice Contractor does not agree to resume such Work based on a reasonable belief it is unsafe, or does not agree to resume such Work under such special conditions, then Owner may order the portion of the Work that is in the area affected by such condition to be deleted from the Work. If Owner and Contractor cannot agree as to entitlement to or on the amount or extent, if any, of an adjustment in Contract Price or Contract Times as a result of deleting such portion of the Work, then either party may make a Claim therefor as provided in Paragraph 10.05. Owner may have such deleted portion of the Work performed by Owner's own forces or others in accordance with Article 7.

G. To the fullest extent permitted by Laws and Regulations, Owner shall indemnify and hold harmless Contractor, Subcontractors, and Engineer, and the officers, directors, partners, employees, agents, consultants, and subcontractors of each and any of them from and against all claims, costs, losses, and damages (including but not limited to all fees and charges of engineers, architects, attorneys, and other professionals and all court or arbitration or other dispute resolution costs) arising out of or relating to a Hazardous Environmental Condition, provided that such Hazardous Environmental Condition: (i) was not shown or indicated in the Drawings or Specifications or identified in the Contract Documents to be included within the scope of the Work, and (ii) was not created by Contractor or by anyone for whom Contractor is responsible. Nothing in this Paragraph 4.06. G shall obligate Owner to indemnify any individual or entity from and against the consequences of that individual's or entity's own negligence.

H. To the fullest extent permitted by Laws and Regulations, Contractor shall indemnify and hold harmless Owner and Engineer, and the officers, directors, partners, employees, agents, consultants, and subcontractors of each and any of them from and against all claims, costs, losses, and damages (including but not limited to all fees and charges of engineers, architects, attorneys, and other professionals and all court or arbitration or other dispute resolution costs) arising out of or relating to a Hazardous Environmental Condition created by Contractor or by anyone for whom Contractor is responsible. Nothing in this Paragraph 4.06.H shall obligate Contractor to indemnify any individual or entity from and against the consequences of that individual's or entity's own negligence.

I. The provisions of Paragraphs 4.02, 4.03, and 4.04 do not apply to a Hazardous Environmental Condition uncovered or revealed at the Site.

ARTICLE 5 - BONDS AND INSURANCE

5.01 *Performance, Payment, and Other Bonds*

A. Contractor shall furnish performance and payment bonds, each in an amount at least equal to the Contract Price as security for the faithful performance and payment of all of Contractor's obligations under the Contract Documents. These bonds shall remain in effect until one year after the date when final payment becomes due or until completion of the correction period specified

Copyright © 2002 National Society of Professional Engineers for EJCDC. All rights reserved.

in Paragraph 13.07, whichever is later, except as provided otherwise by Laws or Regulations or by the Contract Documents. Contractor shall also furnish such other bonds as are required by the Contract Documents.

B. All bonds shall be in the form prescribed by the Contract Documents except as provided otherwise by Laws or Regulations, and shall be executed by such sureties as are named in the current list of "Companies Holding Certificates of Authority as Acceptable Sureties on Federal Bonds and as Acceptable Reinsuring Companies" as published in Circular 570 (amended) by the Financial Management Service, Surety Bond Branch, U.S. Department of the Treasury. All bonds signed by an agent must be accompanied by a certified copy of the agent's authority to act.

C. If the surety on any bond furnished by Contractor is declared bankrupt or becomes insolvent or its right to do business is terminated in any state where any part of the Project is located or it ceases to meet the requirements of Paragraph 5.01.B, Contractor shall promptly notify Owner and Engineer and shall, within 20 days after the event giving rise to such notification, provide another bond and surety, both of which shall comply with the requirements of Paragraphs 5.01.B and 5.02.

5.02 *Licensed Sureties and Insurers*

A. All bonds and insurance required by the Contract Documents to be purchased and maintained by Owner or Contractor shall be obtained from surety or insurance companies that are duly licensed or authorized in the jurisdiction in which the Project is located to issue bonds or insurance policies for the limits and coverages so required. Such surety and insurance companies shall also meet such additional requirements and qualifications as may be provided in the Supplementary Conditions.

5.03 *Certificates of Insurance*

A. Contractor shall deliver to Owner, with copies to each additional insured identified in the Supplementary Conditions, certificates of insurance (and other evidence of insurance requested by Owner or any other additional insured) which Contractor is required to purchase and maintain.

B. Owner shall deliver to Contractor, with copies to each additional insured identified in the Supplementary Conditions, certificates of insurance (and other evidence of insurance requested by Contractor or any other additional insured) which Owner is required to purchase and maintain.

5.04 *Contractor's Liability Insurance*

A. Contractor shall purchase and maintain such liability and other insurance as is appropriate for the Work being performed and as will provide protection from claims set forth below which may arise out of or result from Contractor's performance of the Work and Contractor's other obligations under the Contract Documents, whether it is to be performed by Contractor, any Subcontractor or Supplier, or by anyone directly or indirectly employed by any of them to perform any of the Work, or by anyone for whose acts any of them may be liable:

1. claims under workers' compensation, disability benefits, and other similar employee benefit acts;

2. claims for damages because of bodily injury, occupational sickness or disease, or death of Contractor's employees;

3. claims for damages because of bodily injury, sickness or disease, or death of any person other than Contractor's employees;

4. claims for damages insured by reasonably available personal injury liability coverage which are sustained:

a. by any person as a result of an offense directly or indirectly related to the employment of such person by Contractor, or

b. by any other person for any other reason;

5. claims for damages, other than to the Work itself, because of injury to or destruction of tangible property wherever located, including loss of use resulting therefrom; and

6. claims for damages because of bodily injury or death of any person or property damage arising out of the ownership, maintenance or use of any motor vehicle.

B. The policies of insurance required by this Paragraph 5.04 shall:

1. with respect to insurance required by Paragraphs 5.04.A.3 through 5.04.A.6 inclusive, include as additional insured (subject to any customary exclusion regarding professional liability) Owner and Engineer, and any other individuals or entities identified in the Supplementary Conditions, all of whom shall be listed as additional insureds, and include coverage for the respective officers, directors, partners, employees, agents, consultants and subcontractors of each and any of all such additional insureds, and the insurance afforded to these additional insureds shall provide primary coverage for all claims covered thereby;

2. include at least the specific coverages and be written for not less than the limits of liability provided in the Supplementary Conditions or required by Laws or Regulations, whichever is greater;

Copyright © 2002 National Society of Professional Engineers for EJCDC. All rights reserved.

3. include completed operations insurance;

4. include contractual liability insurance covering Contractor's indemnity obligations under Paragraphs 6.11 and 6.20;

5. contain a provision or endorsement that the coverage afforded will not be canceled, materially changed or renewal refused until at least 30 days prior written notice has been given to Owner and Contractor and to each other additional insured identified in the Supplementary Conditions to whom a certificate of insurance has been issued (and the certificates of insurance furnished by the Contractor pursuant to Paragraph 5.03 will so provide);

6. remain in effect at least until final payment and at all times thereafter when Contractor may be correcting, removing, or replacing defective Work in accordance with Paragraph 13.07; and

7. with respect to completed operations insurance, and any insurance coverage written on a claims-made basis, remain in effect for at least two years after final payment.

a. Contractor shall furnish Owner and each other additional insured identified in the Supplementary Conditions, to whom a certificate of insurance has been issued, evidence satisfactory to Owner and any such additional insured of continuation of such insurance at final payment and one year thereafter.

5.05 *Owner's Liability Insurance*

A. In addition to the insurance required to be provided by Contractor under Paragraph 5.04, Owner, at Owner's option, may purchase and maintain at Owner's expense Owner's own liability insurance as will protect Owner against claims which may arise from operations under the Contract Documents.

5.06 *Property Insurance*

A. Unless otherwise provided in the Supplementary Conditions, Owner shall purchase and maintain property insurance upon the Work at the Site in the amount of the full replacement cost thereof (subject to such deductible amounts as may be provided in the Supplementary Conditions or required by Laws and Regulations). This insurance shall:

1. include the interests of Owner, Contractor, Subcontractors, and Engineer, and any other individuals or entities identified in the Supplementary Conditions, and the officers, directors, partners, employees, agents, consultants and subcontractors of each and any of them, each of whom is deemed to have an insurable interest and shall be listed as an insured or additional insured;

2. be written on a Builder's Risk "all-risk" or open peril or special causes of loss policy form that shall at least include insurance for physical loss or damage to the Work, temporary buildings, false work, and materials and equipment in transit, and shall insure against at least the following perils or causes of loss: fire, lightning, extended coverage, theft, vandalism and malicious mischief, earthquake, collapse, debris removal, demolition occasioned by enforcement of Laws and Regulations, water damage, (other than caused by flood) and such other perils or causes of loss as may be specifically required by the Supplementary Conditions;

3. include expenses incurred in the repair or replacement of any insured property (including but not limited to fees and charges of engineers and architects);

4. cover materials and equipment stored at the Site or at another location that was agreed to in writing by Owner prior to being incorporated in the Work, provided that such materials and equipment have been included in an Application for Payment recommended by Engineer;

5. allow for partial utilization of the Work by Owner;

6. include testing and startup; and

7. be maintained in effect until final payment is made unless otherwise agreed to in writing by Owner, Contractor, and Engineer with 30 days written notice to each other additional insured to whom a certificate of insurance has been issued.

B. Owner shall purchase and maintain such boiler and machinery insurance or additional property insurance as may be required by the Supplementary Conditions or Laws and Regulations which will include the interests of Owner, Contractor, Subcontractors, and Engineer, and any other individuals or entities identified in the Supplementary Conditions, and the officers, directors, partners, employees, agents, consultants and subcontractors of each and any of them, each of whom is deemed to have an insurable interest and shall be listed as an insured or additional insured.

C. All the policies of insurance (and the certificates or other evidence thereof) required to be purchased and maintained in accordance with Paragraph 5.06 will contain a provision or endorsement that the coverage afforded will not be canceled or materially changed or renewal refused until at least 30 days prior written notice has been given to Owner and Contractor and to each other additional insured to whom a certificate of insurance has been issued and will contain waiver provisions in accordance with Paragraph 5.07.

D. Owner shall not be responsible for purchasing and maintaining any property insurance specified in this Paragraph 5.06 to protect the interests of Contractor, Subcontractors, or others in the Work to the extent of any

Copyright © 2002 National Society of Professional Engineers for EJCDC. All rights reserved.

deductible amounts that are identified in the Supplementary Conditions. The risk of loss within such identified deductible amount will be borne by Contractor, Subcontractors, or others suffering any such loss, and if any of them wishes property insurance coverage within the limits of such amounts, each may purchase and maintain it at the purchaser's own expense.

E. If Contractor requests in writing that other special insurance be included in the property insurance policies provided under Paragraph 5.06, Owner shall, if possible, include such insurance, and the cost thereof will be charged to Contractor by appropriate Change Order. Prior to commencement of the Work at the Site, Owner shall in writing advise Contractor whether or not such other insurance has been procured by Owner.

5.07 *Waiver of Rights*

A. Owner and Contractor intend that all policies purchased in accordance with Paragraph 5.06 will protect Owner, Contractor, Subcontractors, and Engineer, and all other individuals or entities identified in the Supplementary Conditions to be listed as insureds or additional insureds (and the officers, directors, partners, employees, agents, consultants and subcontractors of each and any of them) in such policies and will provide primary coverage for all losses and damages caused by the perils or causes of loss covered thereby. All such policies shall contain provisions to the effect that in the event of payment of any loss or damage the insurers will have no rights of recovery against any of the insureds or additional insureds thereunder. Owner and Contractor waive all rights against each other and their respective officers, directors, partners, employees, agents, consultants and subcontractors of each and any of them for all losses and damages caused by, arising out of or resulting from any of the perils or causes of loss covered by such policies and any other property insurance applicable to the Work; and, in addition, waive all such rights against Subcontractors, and Engineer, and all other individuals or entities identified in the Supplementary Conditions to be listed as insured or additional insured (and the officers, directors, partners, employees, agents, consultants and subcontractors of each and any of them) under such policies for losses and damages so caused. None of the above waivers shall extend to the rights that any party making such waiver may have to the proceeds of insurance held by Owner as trustee or otherwise payable under any policy so issued.

B. Owner waives all rights against Contractor, Subcontractors, and Engineer, and the officers, directors, partners, employees, agents, consultants and subcontractors of each and any of them for:

1. loss due to business interruption, loss of use, or other consequential loss extending beyond direct physical loss or damage to Owner's property or the Work caused by, arising out of, or resulting from fire or other perils whether or not insured by Owner; and

2. loss or damage to the completed Project or part thereof caused by, arising out of, or resulting from fire or other insured peril or cause of loss covered by any property insurance maintained on the completed Project or part thereof by Owner during partial utilization pursuant to Paragraph 14.05, after Substantial Completion pursuant to Paragraph 14.04, or after final payment pursuant to Paragraph 14.07.

C. Any insurance policy maintained by Owner covering any loss, damage or consequential loss referred to in Paragraph 5.07.B shall contain provisions to the effect that in the event of payment of any such loss, damage, or consequential loss, the insurers will have no rights of recovery against Contractor, Subcontractors, or Engineer, and the officers, directors, partners, employees, agents, consultants and subcontractors of each and any of them.

5.08 *Receipt and Application of Insurance Proceeds*

A. Any insured loss under the policies of insurance required by Paragraph 5.06 will be adjusted with Owner and made payable to Owner as fiduciary for the insureds, as their interests may appear, subject to the requirements of any applicable mortgage clause and of Paragraph 5.08.B. Owner shall deposit in a separate account any money so received and shall distribute it in accordance with such agreement as the parties in interest may reach. If no other special agreement is reached, the damaged Work shall be repaired or replaced, the moneys so received applied on account thereof, and the Work and the cost thereof covered by an appropriate Change Order .

B. Owner as fiduciary shall have power to adjust and settle any loss with the insurers unless one of the parties in interest shall object in writing within 15 days after the occurrence of loss to Owner's exercise of this power. If such objection be made, Owner as fiduciary shall make settlement with the insurers in accordance with such agreement as the parties in interest may reach. If no such agreement among the parties in interest is reached, Owner as fiduciary shall adjust and settle the loss with the insurers and, if required in writing by any party in interest, Owner as fiduciary shall give bond for the proper performance of such duties.

5.09 *Acceptance of Bonds and Insurance; Option to Replace*

A. If either Owner or Contractor has any objection to the coverage afforded by or other provisions of the bonds or insurance required to be purchased and maintained by the other party in accordance with Article 5 on the basis of non-conformance with the Contract

Copyright © 2002 National Society of Professional Engineers for EJCDC. All rights reserved.

Documents, the objecting party shall so notify the other party in writing within 10 days after receipt of the certificates (or other evidence requested) required by Paragraph 2.01.B. Owner and Contractor shall each provide to the other such additional information in respect of insurance provided as the other may reasonably request. If either party does not purchase or maintain all of the bonds and insurance required of such party by the Contract Documents, such party shall notify the other party in writing of such failure to purchase prior to the start of the Work, or of such failure to maintain prior to any change in the required coverage. Without prejudice to any other right or remedy, the other party may elect to obtain equivalent bonds or insurance to protect such other party's interests at the expense of the party who was required to provide such coverage, and a Change Order shall be issued to adjust the Contract Price accordingly.

5.10 *Partial Utilization, Acknowledgment of Property Insurer*

A. If Owner finds it necessary to occupy or use a portion or portions of the Work prior to Substantial Completion of all the Work as provided in Paragraph 14.05, no such use or occupancy shall commence before the insurers providing the property insurance pursuant to Paragraph 5.06 have acknowledged notice thereof and in writing effected any changes in coverage necessitated thereby. The insurers providing the property insurance shall consent by endorsement on the policy or policies, but the property insurance shall not be canceled or permitted to lapse on account of any such partial use or occupancy.

ARTICLE 6 - CONTRACTOR'S RESPONSIBILITIES

6.01 *Supervision and Superintendence*

A. Contractor shall supervise, inspect, and direct the Work competently and efficiently, devoting such attention thereto and applying such skills and expertise as may be necessary to perform the Work in accordance with the Contract Documents. Contractor shall be solely responsible for the means, methods, techniques, sequences, and procedures of construction. Contractor shall not be responsible for the negligence of Owner or Engineer in the design or specification of a specific means, method, technique, sequence, or procedure of construction which is shown or indicated in and expressly required by the Contract Documents.

B. At all times during the progress of the Work, Contractor shall assign a competent resident superintendent who shall not be replaced without written notice to Owner and Engineer except under extraordinary circumstances. The superintendent will be Contractor's representative at the Site and shall have authority to act on behalf of Contractor. All communications given to or received from the superintendent shall be binding on Contractor.

6.02 *Labor; Working Hours*

A. Contractor shall provide competent, suitably qualified personnel to survey and lay out the Work and perform construction as required by the Contract Documents. Contractor shall at all times maintain good discipline and order at the Site.

B. Except as otherwise required for the safety or protection of persons or the Work or property at the Site or adjacent thereto, and except as otherwise stated in the Contract Documents, all Work at the Site shall be performed during regular working hours. Contractor will not permit the performance of Work on a Saturday, Sunday, or any legal holiday without Owner's written consent (which will not be unreasonably withheld) given after prior written notice to Engineer.

6.03 *Services, Materials, and Equipment*

A. Unless otherwise specified in the Contract Documents, Contractor shall provide and assume full responsibility for all services, materials, equipment, labor, transportation, construction equipment and machinery, tools, appliances, fuel, power, light, heat, telephone, water, sanitary facilities, temporary facilities, and all other facilities and incidentals necessary for the performance, testing, start-up, and completion of the Work.

B. All materials and equipment incorporated into the Work shall be as specified or, if not specified, shall be of good quality and new, except as otherwise provided in the Contract Documents. All special warranties and guarantees required by the Specifications shall expressly run to the benefit of Owner. If required by Engineer, Contractor shall furnish satisfactory evidence (including reports of required tests) as to the source, kind, and quality of materials and equipment.

C. All materials and equipment shall be stored, applied, installed, connected, erected, protected, used, cleaned, and conditioned in accordance with instructions of the applicable Supplier, except as otherwise may be provided in the Contract Documents.

6.04 *Progress Schedule*

A. Contractor shall adhere to the Progress Schedule established in accordance with Paragraph 2.07 as it may be adjusted from time to time as provided below.

Copyright © 2002 National Society of Professional Engineers for EJCDC. All rights reserved.

1. Contractor shall submit to Engineer for acceptance (to the extent indicated in Paragraph 2.07) proposed adjustments in the Progress Schedule that will not result in changing the Contract Times. Such adjustments will comply with any provisions of the General Requirements applicable thereto.

2. Proposed adjustments in the Progress Schedule that will change the Contract Times shall be submitted in accordance with the requirements of Article 12. Adjustments in Contract Times may only be made by a Change Order.

6.05 *Substitutes and "Or-Equals"*

A. Whenever an item of material or equipment is specified or described in the Contract Documents by using the name of a proprietary item or the name of a particular Supplier, the specification or description is intended to establish the type, function, appearance, and quality required. Unless the specification or description contains or is followed by words reading that no like, equivalent, or "or-equal" item or no substitution is permitted, other items of material or equipment or material or equipment of other Suppliers may be submitted to Engineer for review under the circumstances described below.

1. *"Or-Equal" Items:* If in Engineer's sole discretion an item of material or equipment proposed by Contractor is functionally equal to that named and sufficiently similar so that no change in related Work will be required, it may be considered by Engineer as an "or-equal" item, in which case review and approval of the proposed item may, in Engineer's sole discretion, be accomplished without compliance with some or all of the requirements for approval of proposed substitute items. For the purposes of this Paragraph 6.05.A.1, a proposed item of material or equipment will be considered functionally equal to an item so named if:

a. in the exercise of reasonable judgment Engineer determines that:

1) it is at least equal in materials of construction, quality, durability, appearance, strength, and design characteristics;

2) it will reliably perform at least equally well the function and achieve the results imposed by the design concept of the completed Project as a functioning whole,

3) it has a proven record of performance and availability of responsive service; and

b. Contractor certifies that, if approved and incorporated into the Work:

1) there will be no increase in cost to the Owner or increase in Contract Times, and

2) it will conform substantially to the detailed requirements of the item named in the Contract Documents.

2. Substitute Items

a. If in Engineer's sole discretion an item of material or equipment proposed by Contractor does not qualify as an "or-equal" item under Paragraph 6.05.A.1, it will be considered a proposed substitute item.

b. Contractor shall submit sufficient information as provided below to allow Engineer to determine that the item of material or equipment proposed is essentially equivalent to that named and an acceptable substitute therefor. Requests for review of proposed substitute items of material or equipment will not be accepted by Engineer from anyone other than Contractor.

c. The requirements for review by Engineer will be as set forth in Paragraph 6.05.A.2.d, as supplemented in the General Requirements and as Engineer may decide is appropriate under the circumstances.

d. Contractor shall make written application to Engineer for review of a proposed substitute item of material or equipment that Contractor seeks to furnish or use. The application:

1) shall certify that the proposed substitute item will:

a) perform adequately the functions and achieve the results called for by the general design,

b) be similar in substance to that specified, and

c) be suited to the same use as that specified;

2) will state:

a) the extent, if any, to which the use of the proposed substitute item will prejudice Contractor's achievement of Substantial Completion on time;

b) whether or not use of the proposed substitute item in the Work will require a change in any of the Contract Documents (or in the provisions of any other direct contract with Owner for other work on the Project) to adapt the design to the proposed substitute item; and

Copyright © 2002 National Society of Professional Engineers for EJCDC. All rights reserved.

c) whether or not incorporation or use of the proposed substitute item in connection with the Work is subject to payment of any license fee or royalty;

3) will identify:

a) all variations of the proposed substitute item from that specified , and

b) available engineering, sales, maintenance, repair, and replacement services;

4) and shall contain an itemized estimate of all costs or credits that will result directly or indirectly from use of such substitute item, including costs of redesign and claims of other contractors affected by any resulting change,

B. *Substitute Construction Methods or Procedures:* If a specific means, method, technique, sequence, or procedure of construction is expressly required by the Contract Documents, Contractor may furnish or utilize a substitute means, method, technique, sequence, or procedure of construction approved by Engineer. Contractor shall submit sufficient information to allow Engineer, in Engineer's sole discretion, to determine that the substitute proposed is equivalent to that expressly called for by the Contract Documents. The requirements for review by Engineer will be similar to those provided in Paragraph 6.05.A.2.

C. *Engineer's Evaluation:* Engineer will be allowed a reasonable time within which to evaluate each proposal or submittal made pursuant to Paragraphs 6.05.A and 6.05.B. Engineer may require Contractor to furnish additional data about the proposed substitute item. Engineer will be the sole judge of acceptability. No "or equal" or substitute will be ordered, installed or utilized until Engineer's review is complete, which will be evidenced by either a Change Order for a substitute or an approved Shop Drawing for an "or equal." Engineer will advise Contractor in writing of any negative determination.

D. *Special Guarantee:* Owner may require Contractor to furnish at Contractor's expense a special performance guarantee or other surety with respect to any substitute.

E. *Engineer's Cost Reimbursement*: Engineer will record Engineer's costs in evaluating a substitute proposed or submitted by Contractor pursuant to Paragraphs 6.05.A.2 and 6.05.B Whether or not Engineer approves a substitute item so proposed or submitted by Contractor, Contractor shall reimburse Owner for the charges of Engineer for evaluating each such proposed substitute. Contractor shall also reimburse Owner for the charges of Engineer for making changes in the Contract Documents (or in the provisions of any other direct contract with Owner) resulting from the acceptance of each proposed substitute.

F. *Contractor's Expense*: Contractor shall provide all data in support of any proposed substitute or "or-equal" at Contractor's expense.

6.06 *Concerning Subcontractors, Suppliers, and Others*

A. Contractor shall not employ any Subcontractor, Supplier, or other individual or entity (including those acceptable to Owner as indicated in Paragraph 6.06.B), whether initially or as a replacement, against whom Owner may have reasonable objection. Contractor shall not be required to employ any Subcontractor, Supplier, or other individual or entity to furnish or perform any of the Work against whom Contractor has reasonable objection.

B. If the Supplementary Conditions require the identity of certain Subcontractors, Suppliers, or other individuals or entities to be submitted to Owner in advance for acceptance by Owner by a specified date prior to the Effective Date of the Agreement, and if Contractor has submitted a list thereof in accordance with the Supplementary Conditions, Owner's acceptance (either in writing or by failing to make written objection thereto by the date indicated for acceptance or objection in the Bidding Documents or the Contract Documents) of any such Subcontractor, Supplier, or other individual or entity so identified may be revoked on the basis of reasonable objection after due investigation. Contractor shall submit an acceptable replacement for the rejected Subcontractor, Supplier, or other individual or entity, and the Contract Price will be adjusted by the difference in the cost occasioned by such replacement, and an appropriate Change Order will be issued . No acceptance by Owner of any such Subcontractor, Supplier, or other individual or entity, whether initially or as a replacement, shall constitute a waiver of any right of Owner or Engineer to reject defective Work.

C. Contractor shall be fully responsible to Owner and Engineer for all acts and omissions of the Subcontractors, Suppliers, and other individuals or entities performing or furnishing any of the Work just as Contractor is responsible for Contractor's own acts and omissions. Nothing in the Contract Documents:

1. shall create for the benefit of any such Subcontractor, Supplier, or other individual or entity any contractual relationship between Owner or Engineer and any such Subcontractor, Supplier or other individual or entity, nor

2. shall anything in the Contract Documents create any obligation on the part of Owner or Engineer to pay or to see to the payment of any moneys due any such Subcontractor, Supplier, or other individual

Copyright © 2002 National Society of Professional Engineers for EJCDC. All rights reserved.

or entity except as may otherwise be required by Laws and Regulations.

D. Contractor shall be solely responsible for scheduling and coordinating the Work of Subcontractors, Suppliers, and other individuals or entities performing or furnishing any of the Work under a direct or indirect contract with Contractor.

E. Contractor shall require all Subcontractors, Suppliers, and such other individuals or entities performing or furnishing any of the Work to communicate with Engineer through Contractor.

F. The divisions and sections of the Specifications and the identifications of any Drawings shall not control Contractor in dividing the Work among Subcontractors or Suppliers or delineating the Work to be performed by any specific trade.

G. All Work performed for Contractor by a Subcontractor or Supplier will be pursuant to an appropriate agreement between Contractor and the Subcontractor or Supplier which specifically binds the Subcontractor or Supplier to the applicable terms and conditions of the Contract Documents for the benefit of Owner and Engineer. Whenever any such agreement is with a Subcontractor or Supplier who is listed as an additional insured on the property insurance provided in Paragraph 5.06, the agreement between the Contractor and the Subcontractor or Supplier will contain provisions whereby the Subcontractor or Supplier waives all rights against Owner, Contractor, and Engineer,, and all other individuals or entities identified in the Supplementary Conditions to be listed as insureds or additional insureds (and the officers, directors, partners, employees, agents, consultants and subcontractors of each and any of them) for all losses and damages caused by, arising out of, relating to, or resulting from any of the perils or causes of loss covered by such policies and any other property insurance applicable to the Work. If the insurers on any such policies require separate waiver forms to be signed by any Subcontractor or Supplier, Contractor will obtain the same.

6.07 *Patent Fees and Royalties*

A. Contractor shall pay all license fees and royalties and assume all costs incident to the use in the performance of the Work or the incorporation in the Work of any invention, design, process, product, or device which is the subject of patent rights or copyrights held by others. If a particular invention, design, process, product, or device is specified in the Contract Documents for use in the performance of the Work and if to the actual knowledge of Owner or Engineer its use is subject to patent rights or copyrights calling for the payment of any license fee or royalty to others, the existence of such rights shall be disclosed by Owner in the Contract Documents.

B. To the fullest extent permitted by Laws and Regulations, Contractor shall indemnify and hold harmless Owner and Engineer, and the officers, directors, partners, employees, agents, consultants and subcontractors of each and any of them from and against all claims, costs, losses, and damages (including but not limited to all fees and charges of engineers, architects, attorneys, and other professionals and all court or arbitration or other dispute resolution costs) arising out of or relating to any infringement of patent rights or copyrights incident to the use in the performance of the Work or resulting from the incorporation in the Work of any invention, design, process, product, or device not specified in the Contract Documents.

6.08 *Permits*

A. Unless otherwise provided in the Supplementary Conditions, Contractor shall obtain and pay for all construction permits and licenses. Owner shall assist Contractor, when necessary, in obtaining such permits and licenses. Contractor shall pay all governmental charges and inspection fees necessary for the prosecution of the Work which are applicable at the time of opening of Bids, or, if there are no Bids, on the Effective Date of the Agreement. Owner shall pay all charges of utility owners for connections for providing permanent service to the Work.

6.09 *Laws and Regulations*

A. Contractor shall give all notices required by and shall comply with all Laws and Regulations applicable to the performance of the Work. Except where otherwise expressly required by applicable Laws and Regulations, neither Owner nor Engineer shall be responsible for monitoring Contractor's compliance with any Laws or Regulations.

B. If Contractor performs any Work knowing or having reason to know that it is contrary to Laws or Regulations, Contractor shall bear all claims, costs, losses, and damages (including but not limited to all fees and charges of engineers, architects, attorneys, and other professionals and all court or arbitration or other dispute resolution costs) arising out of or relating to such Work. However, it shall not be Contractor's primary responsibility to make certain that the Specifications and Drawings are in accordance with Laws and Regulations, but this shall not relieve Contractor of Contractor's obligations under Paragraph 3.03.

C. Changes in Laws or Regulations not known at the time of opening of Bids (or, on the Effective Date of the Agreement if there were no Bids) having an effect on the cost or time of performance of the Work shall be the subject of an adjustment in Contract Price or Contract Times. If Owner and Contractor are unable to agree on entitlement to or on the amount or extent, if any, of any such adjustment, a Claim may be made therefor as provided in Paragraph 10.05.

Copyright © 2002 National Society of Professional Engineers for EJCDC. All rights reserved.

6.10 *Taxes*

A. Contractor shall pay all sales, consumer, use, and other similar taxes required to be paid by Contractor in accordance with the Laws and Regulations of the place of the Project which are applicable during the performance of the Work.

6.11 *Use of Site and Other Areas*

A. Limitation on Use of Site and Other Areas

1. Contractor shall confine construction equipment, the storage of materials and equipment, and the operations of workers to the Site and other areas permitted by Laws and Regulations, and shall not unreasonably encumber the Site and other areas with construction equipment or other materials or equipment. Contractor shall assume full responsibility for any damage to any such land or area, or to the owner or occupant thereof, or of any adjacent land or areas resulting from the performance of the Work.

2. Should any claim be made by any such owner or occupant because of the performance of the Work, Contractor shall promptly settle with such other party by negotiation or otherwise resolve the claim by arbitration or other dispute resolution proceeding or at law.

3. To the fullest extent permitted by Laws and Regulations, Contractor shall indemnify and hold harmless Owner and Engineer, and the officers, directors, partners, employees, agents, consultants and subcontractors of each and any of them from and against all claims, costs, losses, and damages (including but not limited to all fees and charges of engineers, architects, attorneys, and other professionals and all court or arbitration or other dispute resolution costs) arising out of or relating to any claim or action, legal or equitable, brought by any such owner or occupant against Owner, Engineer, or any other party indemnified hereunder to the extent caused by or based upon Contractor's performance of the Work.

B. *Removal of Debris During Performance of the Work:* During the progress of the Work Contractor shall keep the Site and other areas free from accumulations of waste materials, rubbish, and other debris. Removal and disposal of such waste materials, rubbish, and other debris shall conform to applicable Laws and Regulations.

C. *Cleaning:* Prior to Substantial Completion of the Work Contractor shall clean the Site and the Work and make it ready for utilization by Owner. At the completion of the Work Contractor shall remove from the Site all tools, appliances, construction equipment and machinery, and surplus materials and shall restore to original condition all property not designated for alteration by the Contract Documents.

D. *Loading Structures:* Contractor shall not load nor permit any part of any structure to be loaded in any manner that will endanger the structure, nor shall Contractor subject any part of the Work or adjacent property to stresses or pressures that will endanger it.

6.12 *Record Documents*

A. Contractor shall maintain in a safe place at the Site one record copy of all Drawings, Specifications, Addenda, Change Orders, Work Change Directives, Field Orders, and written interpretations and clarifications in good order and annotated to show changes made during construction. These record documents together with all approved Samples and a counterpart of all approved Shop Drawings will be available to Engineer for reference. Upon completion of the Work, these record documents, Samples, and Shop Drawings will be delivered to Engineer for Owner.

6.13 *Safety and Protection*

A. Contractor shall be solely responsible for initiating, maintaining and supervising all safety precautions and programs in connection with the Work. Contractor shall take all necessary precautions for the safety of, and shall provide the necessary protection to prevent damage, injury or loss to:

1. all persons on the Site or who may be affected by the Work;

2. all the Work and materials and equipment to be incorporated therein, whether in storage on or off the Site; and

3. other property at the Site or adjacent thereto, including trees, shrubs, lawns, walks, pavements, roadways, structures, utilities, and Underground Facilities not designated for removal, relocation, or replacement in the course of construction.

B. Contractor shall comply with all applicable Laws and Regulations relating to the safety of persons or property, or to the protection of persons or property from damage, injury, or loss; and shall erect and maintain all necessary safeguards for such safety and protection. Contractor shall notify owners of adjacent property and of Underground Facilities and other utility owners when prosecution of the Work may affect them, and shall cooperate with them in the protection, removal, relocation, and replacement of their property.

C. All damage, injury, or loss to any property referred to in Paragraph 6.13.A.2 or 6.13.A.3 caused, directly or indirectly, in whole or in part, by Contractor, any Subcontractor, Supplier, or any other individual or entity directly or indirectly employed by any of them to perform any of the Work, or anyone for whose acts any of them may be liable, shall be remedied by Contractor (except damage or loss attributable to the fault of Draw-

Copyright © 2002 National Society of Professional Engineers for EJCDC. All rights reserved.

ings or Specifications or to the acts or omissions of Owner or Engineer or , or anyone employed by any of them, or anyone for whose acts any of them may be liable, and not attributable, directly or indirectly, in whole or in part, to the fault or negligence of Contractor or any Subcontractor, Supplier, or other individual or entity directly or indirectly employed by any of them).

D. Contractor's duties and responsibilities for safety and for protection of the Work shall continue until such time as all the Work is completed and Engineer has issued a notice to Owner and Contractor in accordance with Paragraph 14.07.B that the Work is acceptable (except as otherwise expressly provided in connection with Substantial Completion).

6.14 *Safety Representative*

A. Contractor shall designate a qualified and experienced safety representative at the Site whose duties and responsibilities shall be the prevention of accidents and the maintaining and supervising of safety precautions and programs.

6.15 *Hazard Communication Programs*

A. Contractor shall be responsible for coordinating any exchange of material safety data sheets or other hazard communication information required to be made available to or exchanged between or among employers at the Site in accordance with Laws or Regulations.

6.16 *Emergencies*

A. In emergencies affecting the safety or protection of persons or the Work or property at the Site or adjacent thereto, Contractor is obligated to act to prevent threatened damage, injury, or loss. Contractor shall give Engineer prompt written notice if Contractor believes that any significant changes in the Work or variations from the Contract Documents have been caused thereby or are required as a result thereof. If Engineer determines that a change in the Contract Documents is required because of the action taken by Contractor in response to such an emergency, a Work Change Directive or Change Order will be issued.

6.17 *Shop Drawings and Samples*

A. Contractor shall submit Shop Drawings and Samples to Engineer for review and approval in accordance with the acceptable Schedule of Submittals (as required by Paragraph 2.07). Each submittal will be identified as Engineer may require.

1. Shop Drawings

a. Submit number of copies specified in the General Requirements.

b. Data shown on the Shop Drawings will be complete with respect to quantities, dimensions, specified performance and design criteria, materials, and similar data to show Engineer the services, materials, and equipment Contractor proposes to provide and to enable Engineer to review the information for the limited purposes required by Paragraph 6.17.D.

2. *Samples:* Contractor shall also submit Samples to Engineer for review and approval in accordance with the acceptable schedule of Shop Drawings and Sample submittals.

a. Submit number of Samples specified in the Specifications.

b. Clearly identify each Sample as to material, Supplier, pertinent data such as catalog numbers, the use for which intended and other data as Engineer may require to enable Engineer to review the submittal for the limited purposes required by Paragraph 6.17.D.

B. Where a Shop Drawing or Sample is required by the Contract Documents or the Schedule of Submittals , any related Work performed prior to Engineer's review and approval of the pertinent submittal will be at the sole expense and responsibility of Contractor.

C. Submittal Procedures

1. Before submitting each Shop Drawing or Sample, Contractor shall have determined and verified:

a. all field measurements, quantities, dimensions, specified performance and design criteria, installation requirements, materials, catalog numbers, and similar information with respect thereto;

b. the suitability of all materials with respect to intended use, fabrication, shipping, handling, storage, assembly, and installation pertaining to the performance of the Work;

c. all information relative to Contractor's responsibilities for means, methods, techniques, sequences, and procedures of construction, and safety precautions and programs incident thereto; and

d. shall also have reviewed and coordinated each Shop Drawing or Sample with other Shop Drawings and Samples and with the requirements of the Work and the Contract Documents.

2. Each submittal shall bear a stamp or specific written certification that Contractor has satisfied Contractor's obligations under the Contract Documents

Copyright © 2002 National Society of Professional Engineers for EJCDC. All rights reserved.

with respect to Contractor's review and approval of that submittal.

3. With each submittal, Contractor shall give Engineer specific written notice of any variations, that the Shop Drawing or Sample may have from the requirements of the Contract Documents. This notice shall be both a written communication separate from the Shop Drawing's or Sample Submittal; and, in addition, by a specific notation made on each Shop Drawing or Sample submitted to Engineer for review and approval of each such variation.

D. *Engineer's Review*

1. Engineer will provide timely review of Shop Drawings and Samples in accordance with the Schedule of Submittals acceptable to Engineer. Engineer's review and approval will be only to determine if the items covered by the submittals will, after installation or incorporation in the Work, conform to the information given in the Contract Documents and be compatible with the design concept of the completed Project as a functioning whole as indicated by the Contract Documents.

2. Engineer's review and approval will not extend to means, methods, techniques, sequences, or procedures of construction (except where a particular means, method, technique, sequence, or procedure of construction is specifically and expressly called for by the Contract Documents) or to safety precautions or programs incident thereto. The review and approval of a separate item as such will not indicate approval of the assembly in which the item functions.

3. Engineer's review and approval shall not relieve Contractor from responsibility for any variation from the requirements of the Contract Documents unless Contractor has complied with the requirements of Paragraph 6.17.C.3 and Engineer has given written approval of each such variation by specific written notation thereof incorporated in or accompanying the Shop Drawing or Sample. Engineer's review and approval shall not relieve Contractor from responsibility for complying with the requirements of Paragraph 6.17.C.1.

E. *Resubmittal Procedures*

1. Contractor shall make corrections required by Engineer and shall return the required number of corrected copies of Shop Drawings and submit, as required, new Samples for review and approval. Contractor shall direct specific attention in writing to revisions other than the corrections called for by Engineer on previous submittals.

6.18 *Continuing the Work*

A. Contractor shall carry on the Work and adhere to the Progress Schedule during all disputes or disagreements with Owner. No Work shall be delayed or postponed pending resolution of any disputes or disagreements, except as permitted by Paragraph 15.04 or as Owner and Contractor may otherwise agree in writing.

6.19 *Contractor's General Warranty and Guarantee*

A. Contractor warrants and guarantees to Owner that all Work will be in accordance with the Contract Documents and will not be defective. Engineer and its Related Entities shall be entitled to rely on representation of Contractor's warranty and guarantee.

B. Contractor's warranty and guarantee hereunder excludes defects or damage caused by:

1. abuse, modification, or improper maintenance or operation by persons other than Contractor, Subcontractors, Suppliers, or any other individual or entity for whom Contractor is responsible; or

2. normal wear and tear under normal usage.

C. Contractor's obligation to perform and complete the Work in accordance with the Contract Documents shall be absolute. None of the following will constitute an acceptance of Work that is not in accordance with the Contract Documents or a release of Contractor's obligation to perform the Work in accordance with the Contract Documents:

1. observations by Engineer;

2. recommendation by Engineer or payment by Owner of any progress or final payment;

3. the issuance of a certificate of Substantial Completion by Engineer or any payment related thereto by Owner;

4. use or occupancy of the Work or any part thereof by Owner;

5. any review and approval of a Shop Drawing or Sample submittal or the issuance of a notice of acceptability by Engineer;

6. any inspection, test, or approval by others; or

7. any correction of defective Work by Owner.

6.20 *Indemnification*

A. To the fullest extent permitted by Laws and Regulations, Contractor shall indemnify and hold harmless Owner and Engineer, and the officers, directors, partners, employees, agents, consultants and subcontractors of each and any of them from and against all claims, costs, losses, and damages (including but not limited to all fees and charges of engineers, architects, attorneys, and other professionals and all court or

Copyright © 2002 National Society of Professional Engineers for EJCDC. All rights reserved.

arbitration or other dispute resolution costs) arising out of or relating to the performance of the Work, provided that any such claim, cost, loss, or damage is attributable to bodily injury, sickness, disease, or death, or to injury to or destruction of tangible property (other than the Work itself), including the loss of use resulting therefrom but only to the extent caused by any negligent act or omission of Contractor, any Subcontractor, any Supplier, or any individual or entity directly or indirectly employed by any of them to perform any of the Work or anyone for whose acts any of them may be liable .

B. In any and all claims against Owner or Engineer or any of their respective consultants, agents, officers, directors, partners, or employees by any employee (or the survivor or personal representative of such employee) of Contractor, any Subcontractor, any Supplier, or any individual or entity directly or indirectly employed by any of them to perform any of the Work, or anyone for whose acts any of them may be liable, the indemnification obligation under Paragraph 6.20.A shall not be limited in any way by any limitation on the amount or type of damages, compensation, or benefits payable by or for Contractor or any such Subcontractor, Supplier, or other individual or entity under workers' compensation acts, disability benefit acts, or other employee benefit acts.

C. The indemnification obligations of Contractor under Paragraph 6.20.A shall not extend to the liability of Engineer and Engineer's officers, directors, partners, employees, agents, consultants and subcontractors arising out of:

1. the preparation or approval of, or the failure to prepare or approve, maps, Drawings, opinions, reports, surveys, Change Orders, designs, or Specifications; or

2. giving directions or instructions, or failing to give them, if that is the primary cause of the injury or damage.

6.21 *Delegation of Professional Design Services*

A. Contractor will not be required to provide professional design services unless such services are specifically required by the Contract Documents for a portion of the Work or unless such services are required to carry out Contractor's responsibilities for construction means, methods, techniques, sequences and procedures. Contractor shall not be required to provide professional services in violation of applicable law.

B. If professional design services or certifications by a design professional related to systems, materials or equipment are specifically required of Contractor by the Contract Documents, Owner and Engineer will specify all performance and design criteria that such services must satisfy. Contractor shall cause such services or certifications to be provided by a properly licensed professional, whose signature and seal shall appear on all drawings, calculations, specifications, certifications, Shop Drawings and other submittals prepared by such professional. Shop Drawings and other submittals related to the Work designed or certified by such professional, if prepared by others, shall bear such professional's written approval when submitted to Engineer.

C. Owner and Engineer shall be entitled to rely upon the adequacy, accuracy and completeness of the services, certifications or approvals performed by such design professionals, provided Owner and Engineer have specified to Contractor all performance and design criteria that such services must satisfy.

D. Pursuant to this Paragraph 6.21, Engineer's review and approval of design calculations and design drawings will be only for the limited purpose of checking for conformance with performance and design criteria given and the design concept expressed in the Contract Documents. Engineer's review and approval of Shop Drawings and other submittals (except design calculations and design drawings) will be only for the purpose stated in Paragraph 6.17.D.1.

E. Contractor shall not be responsible for the adequacy of the performance or design criteria required by the Contract Documents.

ARTICLE 7 - OTHER WORK AT THE SITE

7.01 *Related Work at Site*

A. Owner may perform other work related to the Project at the Site with Owner's employees, or via other direct contracts therefor, or have other work performed by utility owners. If such other work is not noted in the Contract Documents, then:

1. written notice thereof will be given to Contractor prior to starting any such other work; and

2. if Owner and Contractor are unable to agree on entitlement to or on the amount or extent, if any, of any adjustment in the Contract Price or Contract Times that should be allowed as a result of such other work, a Claim may be made therefor as provided in Paragraph 10.05.

B. Contractor shall afford each other contractor who is a party to such a direct contract, each utility owner and Owner, if Owner is performing other work with Owner's employees, proper and safe access to the Site, a reasonable opportunity for the introduction and storage of materials and equipment and the execution of such other work, and shall properly coordinate the Work with theirs. Contractor shall do all cutting, fitting, and patching of the Work that may be required to properly connect or otherwise make its several parts come together and

Copyright © 2002 National Society of Professional Engineers for EJCDC. All rights reserved.

properly integrate with such other work. Contractor shall not endanger any work of others by cutting, excavating, or otherwise altering their work and will only cut or alter their work with the written consent of Engineer and the others whose work will be affected. The duties and responsibilities of Contractor under this Paragraph are for the benefit of such utility owners and other contractors to the extent that there are comparable provisions for the benefit of Contractor in said direct contracts between Owner and such utility owners and other contractors.

C. If the proper execution or results of any part of Contractor's Work depends upon work performed by others under this Article 7, Contractor shall inspect such other work and promptly report to Engineer in writing any delays, defects, or deficiencies in such other work that render it unavailable or unsuitable for the proper execution and results of Contractor's Work. Contractor's failure to so report will constitute an acceptance of such other work as fit and proper for integration with Contractor's Work except for latent defects and deficiencies in such other work.

7.02 *Coordination*

A. If Owner intends to contract with others for the performance of other work on the Project at the Site, the following will be set forth in Supplementary Conditions:

1. the individual or entity who will have authority and responsibility for coordination of the activities among the various contractors will be identified;

2. the specific matters to be covered by such authority and responsibility will be itemized; and

3. the extent of such authority and responsibilities will be provided.

B. Unless otherwise provided in the Supplementary Conditions, Owner shall have sole authority and responsibility for such coordination.

7.03 *Legal Relationships*

A. Paragraphs 7.01.A and 7.02 are not applicable for utilities not under the control of Owner.

B. Each other direct contract of Owner under Paragraph 7.01.A shall provide that the other contractor is liable to Owner and Contractor for the reasonable direct delay and disruption costs incurred by Contractor as a result of the other contractor's actions or inactions.

C. Contractor shall be liable to Owner and any other contractor for the reasonable direct delay and disruption costs incurred by such other contractor as a result of Contractor's action or inactions.

ARTICLE 8 - OWNER'S RESPONSIBILITIES

8.01 *Communications to Contractor*

A. Except as otherwise provided in these General Conditions, Owner shall issue all communications to Contractor through Engineer.

8.02 *Replacement of Engineer*

A. In case of termination of the employment of Engineer, Owner shall appoint an engineer to whom Contractor makes no reasonable objection, whose status under the Contract Documents shall be that of the former Engineer.

8.03 *Furnish Data*

A. Owner shall promptly furnish the data required of Owner under the Contract Documents.

8.04 *Pay When Due*

A. Owner shall make payments to Contractor when they are due as provided in Paragraphs 14.02.C and 14.07.C.

8.05 *Lands and Easements; Reports and Tests*

A. Owner's duties in respect of providing lands and easements and providing engineering surveys to establish reference points are set forth in Paragraphs 4.01 and 4.05. Paragraph 4.02 refers to Owner's identifying and making available to Contractor copies of reports of explorations and tests of subsurface conditions and drawings of physical conditions in or relating to existing surface or subsurface structures at or contiguous to the Site that have been utilized by Engineer in preparing the Contract Documents.

8.06 *Insurance*

A. Owner's responsibilities, if any, in respect to purchasing and maintaining liability and property insurance are set forth in Article 5.

8.07 *Change Orders*

A. Owner is obligated to execute Change Orders as indicated in Paragraph 10.03.

8.08 *Inspections, Tests, and Approvals*

A. Owner's responsibility in respect to certain inspections, tests, and approvals is set forth in Paragraph 13.03.B.

Copyright © 2002 National Society of Professional Engineers for EJCDC. All rights reserved.

8.09 *Limitations on Owner's Responsibilities*

A. The Owner shall not supervise, direct, or have control or authority over, nor be responsible for, Contractor's means, methods, techniques, sequences, or procedures of construction, or the safety precautions and programs incident thereto, or for any failure of Contractor to comply with Laws and Regulations applicable to the performance of the Work. Owner will not be responsible for Contractor's failure to perform the Work in accordance with the Contract Documents.

8.10 *Undisclosed Hazardous Environmental Condition*

A. Owner's responsibility in respect to an undisclosed Hazardous Environmental Condition is set forth in Paragraph 4.06.

8.11 *Evidence of Financial Arrangements*

A. If and to the extent Owner has agreed to furnish Contractor reasonable evidence that financial arrangements have been made to satisfy Owner's obligations under the Contract Documents, Owner's responsibility in respect thereof will be as set forth in the Supplementary Conditions.

ARTICLE 9 - ENGINEER'S STATUS DURING CONSTRUCTION

9.01 *Owner's Representative*

A. Engineer will be Owner's representative during the construction period. The duties and responsibilities and the limitations of authority of Engineer as Owner's representative during construction are set forth in the Contract Documents and will not be changed without written consent of Owner and Engineer.

9.02 *Visits to Site*

A. Engineer will make visits to the Site at intervals appropriate to the various stages of construction as Engineer deems necessary in order to observe as an experienced and qualified design professional the progress that has been made and the quality of the various aspects of Contractor's executed Work. Based on information obtained during such visits and observations, Engineer, for the benefit of Owner, will determine, in general, if the Work is proceeding in accordance with the Contract Documents. Engineer will not be required to make exhaustive or continuous inspections on the Site to check the quality or quantity of the Work. Engineer's efforts will be directed toward providing for Owner a greater degree of confidence that the completed Work will conform generally to the Contract Documents. On the basis of such visits and observations, Engineer will keep Owner informed of the progress of the Work and will endeavor to guard Owner against defective Work.

B. Engineer's visits and observations are subject to all the limitations on Engineer's authority and responsibility set forth in Paragraph 9.09. Particularly, but without limitation, during or as a result of Engineer's visits or observations of Contractor's Work Engineer will not supervise, direct, control, or have authority over or be responsible for Contractor's means, methods, techniques, sequences, or procedures of construction, or the safety precautions and programs incident thereto, or for any failure of Contractor to comply with Laws and Regulations applicable to the performance of the Work.

9.03 *Project Representative*

A. If Owner and Engineer agree, Engineer will furnish a Resident Project Representative to assist Engineer in providing more extensive observation of the Work. The authority and responsibilities of any such Resident Project Representative and assistants will be as provided in the Supplementary Conditions, and limitations on the responsibilities thereof will be as provided in Paragraph 9.09. If Owner designates another representative or agent to represent Owner at the Site who is not Engineer's consultant, agent or employee, the responsibilities and authority and limitations thereon of such other individual or entity will be as provided in the Supplementary Conditions.

9.04 *Authorized Variations in Work*

A. Engineer may authorize minor variations in the Work from the requirements of the Contract Documents which do not involve an adjustment in the Contract Price or the Contract Times and are compatible with the design concept of the completed Project as a functioning whole as indicated by the Contract Documents. These may be accomplished by a Field Order and will be binding on Owner and also on Contractor, who shall perform the Work involved promptly. If Owner or Contractor believes that a Field Order justifies an adjustment in the Contract Price or Contract Times, or both, and the parties are unable to agree on entitlement to or on the amount or extent, if any, of any such adjustment , a Claim may be made therefor as provided in Paragraph 10.05.

9.05 *Rejecting Defective Work*

A. Engineer will have authority to reject Work which Engineer believes to be defective, or that Engineer believes will not produce a completed Project that conforms to the Contract Documents or that will prejudice the integrity of the design concept of the completed Project as a functioning whole as indicated by the Contract Documents. Engineer will also have authority to require special inspection or testing of the Work as provided in Paragraph 13.04, whether or not the Work is fabricated, installed, or completed.

Copyright © 2002 National Society of Professional Engineers for EJCDC. All rights reserved.

9.06 *Shop Drawings, Change Orders and Payments*

A. In connection with Engineer's authority, and limitations thereof, as to Shop Drawings and Samples, see Paragraph 6.17.

B. In connection with Engineer's authority, and limitations thereof, as to design calculations and design drawings submitted in response to a delegation of professional design services, if any, see Paragraph 6.21.

C. In connection with Engineer's authority as to Change Orders, see Articles 10, 11, and 12.

D. In connection with Engineer's authority as to Applications for Payment, see Article 14.

9.07 *Determinations for Unit Price Work*

A. Engineer will determine the actual quantities and classifications of Unit Price Work performed by Contractor. Engineer will review with Contractor the Engineer's preliminary determinations on such matters before rendering a written decision thereon (by recommendation of an Application for Payment or otherwise). Engineer's written decision thereon will be final and binding (except as modified by Engineer to reflect changed factual conditions or more accurate data) upon Owner and Contractor, subject to the provisions of Paragraph 10.05.

9.08 *Decisions on Requirements of Contract Documents and Acceptability of Work*

A. Engineer will be the initial interpreter of the requirements of the Contract Documents and judge of the acceptability of the Work thereunder. All matters in question and other matters between Owner and Contractor arising prior to the date final payment is due relating to the acceptability of the Work, and the interpretation of the requirements of the Contract Documents pertaining to the performance of the Work, will be referred initially to Engineer in writing within 30 days of the event giving rise to the question

B. Engineer will, with reasonable promptness, render a written decision on the issue referred. If Owner or Contractor believe that any such decision entitles them to an adjustment in the Contract Price or Contract Times or both, a Claim may be made under Paragraph 10.05. The date of Engineer's decision shall be the date of the event giving rise to the issues referenced for the purposes of Paragraph 10.05.B.

C. Engineer's written decision on the issue referred will be final and binding on Owner and Contractor, subject to the provisions of Paragraph 10.05.

D. When functioning as interpreter and judge under this Paragraph 9.08, Engineer will not show partiality to Owner or Contractor and will not be liable in connection with any interpretation or decision rendered in good faith in such capacity.

9.09 *Limitations on Engineer's Authority and Responsibilities*

A. Neither Engineer's authority or responsibility under this Article 9 or under any other provision of the Contract Documents nor any decision made by Engineer in good faith either to exercise or not exercise such authority or responsibility or the undertaking, exercise, or performance of any authority or responsibility by Engineer shall create, impose, or give rise to any duty in contract, tort, or otherwise owed by Engineer to Contractor, any Subcontractor, any Supplier, any other individual or entity, or to any surety for or employee or agent of any of them.

B. Engineer will not supervise, direct, control, or have authority over or be responsible for Contractor's means, methods, techniques, sequences, or procedures of construction, or the safety precautions and programs incident thereto, or for any failure of Contractor to comply with Laws and Regulations applicable to the performance of the Work. Engineer will not be responsible for Contractor's failure to perform the Work in accordance with the Contract Documents.

C. Engineer will not be responsible for the acts or omissions of Contractor or of any Subcontractor, any Supplier, or of any other individual or entity performing any of the Work.

D. Engineer's review of the final Application for Payment and accompanying documentation and all maintenance and operating instructions, schedules, guarantees, bonds, certificates of inspection, tests and approvals, and other documentation required to be delivered by Paragraph 14.07.A will only be to determine generally that their content complies with the requirements of, and in the case of certificates of inspections, tests, and approvals that the results certified indicate compliance with the Contract Documents.

E. The limitations upon authority and responsibility set forth in this Paragraph 9.09 shall also apply to, the Resident Project Representative, if any, and assistants, if any.

ARTICLE 10 - CHANGES IN THE WORK; CLAIMS

10.01 *Authorized Changes in the Work*

A. Without invalidating the Contract and without notice to any surety, Owner may, at any time or from time to time, order additions, deletions, or revisions in the Work by a Change Order, or a Work Change Directive. Upon receipt of any such document, Contractor shall

Copyright © 2002 National Society of Professional Engineers for EJCDC. All rights reserved.

promptly proceed with the Work involved which will be performed under the applicable conditions of the Contract Documents (except as otherwise specifically provided).

B. If Owner and Contractor are unable to agree on entitlement to, or on the amount or extent, if any, of an adjustment in the Contract Price or Contract Times, or both, that should be allowed as a result of a Work Change Directive, a Claim may be made therefor as provided in Paragraph 10.05.

10.02 *Unauthorized Changes in the Work*

A.Contractor shall not be entitled to an increase in the Contract Price or an extension of the Contract Times with respect to any work performed that is not required by the Contract Documents as amended, modified, or supplemented as provided in Paragraph 3.04, except in the case of an emergency as provided in Paragraph 6.16 or in the case of uncovering Work as provided in Paragraph 13.04.B.

10.03 *Execution of Change Orders*

A. Owner and Contractor shall execute appropriate Change Orders recommended by Engineer covering:

1. changes in the Work which are: (i) ordered by Owner pursuant to Paragraph 10.01.A, (ii) required because of acceptance of defective Work under Paragraph 13.08.A or Owner's correction of defective Work under Paragraph 13.09, or (iii) agreed to by the parties;

2. changes in the Contract Price or Contract Times which are agreed to by the parties, including any undisputed sum or amount of time for Work actually performed in accordance with a Work Change Directive; and

3. changes in the Contract Price or Contract Times which embody the substance of any written decision rendered by Engineer pursuant to Paragraph 10.05; provided that, in lieu of executing any such Change Order, an appeal may be taken from any such decision in accordance with the provisions of the Contract Documents and applicable Laws and Regulations, but during any such appeal, Contractor shall carry on the Work and adhere to the Progress Schedule as provided in Paragraph 6.18.A.

10.04 *Notification to Surety*

A. If notice of any change affecting the general scope of the Work or the provisions of the Contract Documents (including, but not limited to, Contract Price or Contract Times) is required by the provisions of any bond to be given to a surety, the giving of any such notice will be Contractor's responsibility. The amount of each applicable bond will be adjusted to reflect the effect of any such change.

10.05 *Claims*

A. *Engineer's Decision Required*: All Claims, except those waived pursuant to Paragraph 14.09, shall be referred to the Engineer for decision. A decision by Engineer shall be required as a condition precedent to any exercise by Owner or Contractor of any rights or remedies either may otherwise have under the Contract Documents or by Laws and Regulations in respect of such Claims.

B. *Notice:* Written notice stating the general nature of each Claim, shall be delivered by the claimant to Engineer and the other party to the Contract promptly (but in no event later than 30 days) after the start of the event giving rise thereto. The responsibility to substantiate a Claim shall rest with the party making the Claim. Notice of the amount or extent of the Claim, with supporting data shall be delivered to the Engineer and the other party to the Contract within 60 days after the start of such event (unless Engineer allows additional time for claimant to submit additional or more accurate data in support of such Claim). A Claim for an adjustment in Contract Price shall be prepared in accordance with the provisions of Paragraph 12.01.B. A Claim for an adjustment in Contract Time shall be prepared in accordance with the provisions of Paragraph 12.02.B. Each Claim shall be accompanied by claimant's written statement that the adjustment claimed is the entire adjustment to which the claimant believes it is entitled as a result of said event. The opposing party shall submit any response to Engineer and the claimant within 30 days after receipt of the claimant's last submittal (unless Engineer allows additional time).

C. *Engineer's Action*: Engineer will review each Claim and, within 30 days after receipt of the last submittal of the claimant or the last submittal of the opposing party, if any, take one of the following actions in writing:

1. deny the Claim in whole or in part,

2. approve the Claim, or

3. notify the parties that the Engineer is unable to resolve the Claim if, in the Engineer's sole discretion, it would be inappropriate for the Engineer to do so. For purposes of further resolution of the Claim, such notice shall be deemed a denial.

D. In the event that Engineer does not take action on a Claim within said 30 days, the Claim shall be deemed denied.

E. Engineer's written action under Paragraph 10.05.C or denial pursuant to Paragraphs 10.05.C.3 or 10.05.D will be final and binding upon Owner and Contractor, unless Owner or Contractor invoke the dispute resolution procedure set forth in Article 16 within 30 days of such action or denial.

Copyright © 2002 National Society of Professional Engineers for EJCDC. All rights reserved.

F. No Claim for an adjustment in Contract Price or Contract Times will be valid if not submitted in accordance with this Paragraph 10.05.

ARTICLE 11 - COST OF THE WORK; ALLOWANCES; UNIT PRICE WORK

11.01 *Cost of the Work*

A. *Costs Included:* The term Cost of the Work means the sum of all costs, except those excluded in Paragraph 11.01.B, necessarily incurred and paid by Contractor in the proper performance of the Work. When the value of any Work covered by a Change Order or when a Claim for an adjustment in Contract Price is determined on the basis of Cost of the Work, the costs to be reimbursed to Contractor will be only those additional or incremental costs required because of the change in the Work or because of the event giving rise to the Claim. Except as otherwise may be agreed to in writing by Owner, such costs shall be in amounts no higher than those prevailing in the locality of the Project, shall include only the following items, and shall not include any of the costs itemized in Paragraph 11.01.B.

1. Payroll costs for employees in the direct employ of Contractor in the performance of the Work under schedules of job classifications agreed upon by Owner and Contractor. Such employees shall include, without limitation, superintendents, foremen, and other personnel employed full time at the Site. Payroll costs for employees not employed full time on the Work shall be apportioned on the basis of their time spent on the Work. Payroll costs shall include, but not be limited to, salaries and wages plus the cost of fringe benefits, which shall include social security contributions, unemployment, excise, and payroll taxes, workers' compensation, health and retirement benefits, bonuses, sick leave, vacation and holiday pay applicable thereto. The expenses of performing Work outside of regular working hours, on Saturday, Sunday, or legal holidays, shall be included in the above to the extent authorized by Owner.

2. Cost of all materials and equipment furnished and incorporated in the Work, including costs of transportation and storage thereof, and Suppliers' field services required in connection therewith. All cash discounts shall accrue to Contractor unless Owner deposits funds with Contractor with which to make payments, in which case the cash discounts shall accrue to Owner. All trade discounts, rebates and refunds and returns from sale of surplus materials and equipment shall accrue to Owner, and Contractor shall make provisions so that they may be obtained.

3. Payments made by Contractor to Subcontractors for Work performed by Subcontractors. If required by Owner, Contractor shall obtain competitive bids from subcontractors acceptable to Owner and Contractor and shall deliver such bids to Owner, who will then determine, with the advice of Engineer, which bids, if any, will be acceptable. If any subcontract provides that the Subcontractor is to be paid on the basis of Cost of the Work plus a fee, the Subcontractor's Cost of the Work and fee shall be determined in the same manner as Contractor's Cost of the Work and fee as provided in this Paragraph 11.01.

4. Costs of special consultants (including but not limited to Engineers, architects, testing laboratories, surveyors, attorneys, and accountants) employed for services specifically related to the Work.

5. Supplemental costs including the following:

a. The proportion of necessary transportation, travel, and subsistence expenses of Contractor's employees incurred in discharge of duties connected with the Work.

b. Cost, including transportation and maintenance, of all materials, supplies, equipment, machinery, appliances, office, and temporary facilities at the Site, and hand tools not owned by the workers, which are consumed in the performance of the Work, and cost, less market value, of such items used but not consumed which remain the property of Contractor.

c. Rentals of all construction equipment and machinery, and the parts thereof whether rented from Contractor or others in accordance with rental agreements approved by Owner with the advice of Engineer, and the costs of transportation, loading, unloading, assembly, dismantling, and removal thereof. All such costs shall be in accordance with the terms of said rental agreements. The rental of any such equipment, machinery, or parts shall cease when the use thereof is no longer necessary for the Work.

d. Sales, consumer, use, and other similar taxes related to the Work, and for which Contractor is liable, imposed by Laws and Regulations.

e. Deposits lost for causes other than negligence of Contractor, any Subcontractor, or anyone directly or indirectly employed by any of them or for whose acts any of them may be liable, and royalty payments and fees for permits and licenses.

f. Losses and damages (and related expenses) caused by damage to the Work, not compensated by insurance or otherwise, sustained by Contractor in connection with the performance of the Work (except losses and damages within the deductible amounts of property insurance established in accordance with Paragraph 5.06.D), provided such losses and damages have

Copyright © 2002 National Society of Professional Engineers for EJCDC. All rights reserved.

resulted from causes other than the negligence of Contractor, any Subcontractor, or anyone directly or indirectly employed by any of them or for whose acts any of them may be liable. Such losses shall include settlements made with the written consent and approval of Owner. No such losses, damages, and expenses shall be included in the Cost of the Work for the purpose of determining Contractor's fee.

g. The cost of utilities, fuel, and sanitary facilities at the Site.

h. Minor expenses such as telegrams, long distance telephone calls, telephone service at the Site, expresses, and similar petty cash items in connection with the Work.

i. The costs of premiums for all bonds and insurance Contractor is required by the Contract Documents to purchase and maintain.

B. *Costs Excluded:* The term Cost of the Work shall not include any of the following items:

1. Payroll costs and other compensation of Contractor's officers, executives, principals (of partnerships and sole proprietorships), general managers, safety managers, engineers, architects, estimators, attorneys, auditors, accountants, purchasing and contracting agents, expediters, timekeepers, clerks, and other personnel employed by Contractor, whether at the Site or in Contractor's principal or branch office for general administration of the Work and not specifically included in the agreed upon schedule of job classifications referred to in Paragraph 11.01.A.1 or specifically covered by Paragraph 11.01.A.4, all of which are to be considered administrative costs covered by the Contractor's fee.

2. Expenses of Contractor's principal and branch offices other than Contractor's office at the Site.

3. Any part of Contractor's capital expenses, including interest on Contractor's capital employed for the Work and charges against Contractor for delinquent payments.

4. Costs due to the negligence of Contractor, any Subcontractor, or anyone directly or indirectly employed by any of them or for whose acts any of them may be liable, including but not limited to, the correction of defective Work, disposal of materials or equipment wrongly supplied, and making good any damage to property.

5. Other overhead or general expense costs of any kind and the costs of any item not specifically and expressly included in Paragraphs 11.01.A and 11.01.B.

C. *Contractor's Fee:* When all the Work is performed on the basis of cost-plus, Contractor's fee shall be determined as set forth in the Agreement. When the value of any Work covered by a Change Order or when a Claim for an adjustment in Contract Price is determined on the basis of Cost of the Work, Contractor's fee shall be determined as set forth in Paragraph 12.01.C.

D. *Documentation:* Whenever the Cost of the Work for any purpose is to be determined pursuant to Paragraphs 11.01.A and 11.01.B, Contractor will establish and maintain records thereof in accordance with generally accepted accounting practices and submit in a form acceptable to Engineer an itemized cost breakdown together with supporting data.

11.02 *Allowances*

A. It is understood that Contractor has included in the Contract Price all allowances so named in the Contract Documents and shall cause the Work so covered to be performed for such sums and by such persons or entities as may be acceptable to Owner and Engineer.

B. *Cash Allowances*

1. Contractor agrees that:

a. the cash allowances include the cost to Contractor (less any applicable trade discounts) of materials and equipment required by the allowances to be delivered at the Site, and all applicable taxes; and

b. Contractor's costs for unloading and handling on the Site, labor, installation , overhead, profit, and other expenses contemplated for the cash allowances have been included in the Contract Price and not in the allowances, and no demand for additional payment on account of any of the foregoing will be valid.

C. Contingency Allowance

1. Contractor agrees that a contingency allowance, if any, is for the sole use of Owner to cover unanticipated costs.

D. Prior to final payment, an appropriate Change Order will be issued as recommended by Engineer to reflect actual amounts due Contractor on account of Work covered by allowances, and the Contract Price shall be correspondingly adjusted.

11.03 *Unit Price Work*

A. Where the Contract Documents provide that all or part of the Work is to be Unit Price Work, initially the Contract Price will be deemed to include for all Unit Price Work an amount equal to the sum of the unit price for each separately identified item of Unit Price Work times the estimated quantity of each item as indicated in the Agreement.

Copyright © 2002 National Society of Professional Engineers for EJCDC. All rights reserved.

B. The estimated quantities of items of Unit Price Work are not guaranteed and are solely for the purpose of comparison of Bids and determining an initial Contract Price. Determinations of the actual quantities and classifications of Unit Price Work performed by Contractor will be made by Engineer subject to the provisions of Paragraph 9.07.

C. Each unit price will be deemed to include an amount considered by Contractor to be adequate to cover Contractor's overhead and profit for each separately identified item.

D. Owner or Contractor may make a Claim for an adjustment in the Contract Price in accordance with Paragraph 10.05 if:

1. the quantity of any item of Unit Price Work performed by Contractor differs materially and significantly from the estimated quantity of such item indicated in the Agreement; and

2. there is no corresponding adjustment with respect any other item of Work; and

3. Contractor believes that Contractor is entitled to an increase in Contract Price as a result of having incurred additional expense or Owner believes that Owner is entitled to a decrease in Contract Price and the parties are unable to agree as to the amount of any such increase or decrease.

ARTICLE 12 - CHANGE OF CONTRACT PRICE; CHANGE OF CONTRACT TIMES

12.01 *Change of Contract Price*

A. The Contract Price may only be changed by a Change Order. Any Claim for an adjustment in the Contract Price shall be based on written notice submitted by the party making the Claim to the Engineer and the other party to the Contract in accordance with the provisions of Paragraph 10.05.

B. The value of any Work covered by a Change Order or of any Claim for an adjustment in the Contract Price will be determined as follows:

1. where the Work involved is covered by unit prices contained in the Contract Documents, by application of such unit prices to the quantities of the items involved (subject to the provisions of Paragraph 11.03); or

2. where the Work involved is not covered by unit prices contained in the Contract Documents, by a mutually agreed lump sum (which may include an allowance for overhead and profit not necessarily in accordance with Paragraph 12.01.C.2); or

3. where the Work involved is not covered by unit prices contained in the Contract Documents and agreement to a lump sum is not reached under Paragraph 12.01.B.2, on the basis of the Cost of the Work (determined as provided in Paragraph 11.01) plus a Contractor's fee for overhead and profit (determined as provided in Paragraph 12.01.C).

C. *Contractor's Fee:* The Contractor's fee for overhead and profit shall be determined as follows:

1. a mutually acceptable fixed fee; or

2. if a fixed fee is not agreed upon, then a fee based on the following percentages of the various portions of the Cost of the Work:

a. for costs incurred under Paragraphs 11.01.A.1 and 11.01.A.2, the Contractor's fee shall be 15 percent;

b. for costs incurred under Paragraph 11.01.A.3, the Contractor's fee shall be five percent;

c. where one or more tiers of subcontracts are on the basis of Cost of the Work plus a fee and no fixed fee is agreed upon, the intent of Paragraph 12.01.C.2.a is that the Subcontractor who actually performs the Work, at whatever tier, will be paid a fee of 15 percent of the costs incurred by such Subcontractor under Paragraphs 11.01.A.1 and 11.01.A.2 and that any higher tier Subcontractor and Contractor will each be paid a fee of five percent of the amount paid to the next lower tier Subcontractor;

d. no fee shall be payable on the basis of costs itemized under Paragraphs 11.01.A.4, 11.01.A.5, and 11.01.B;

e. the amount of credit to be allowed by Contractor to Owner for any change which results in a net decrease in cost will be the amount of the actual net decrease in cost plus a deduction in Contractor's fee by an amount equal to five percent of such net decrease; and

f. when both additions and credits are involved in any one change, the adjustment in Contractor's fee shall be computed on the basis of the net change in accordance with Paragraphs 12.01.C.2.a through 12.01.C.2.e, inclusive.

12.02 *Change of Contract Times*

A. The Contract Times may only be changed by a Change Order. Any Claim for an adjustment in the Contract Times shall be based on written notice submitted

Copyright © 2002 National Society of Professional Engineers for EJCDC. All rights reserved.

by the party making the Claim to the Engineer and the other party to the Contract in accordance with the provisions of Paragraph 10.05.

B. Any adjustment of the Contract Times covered by a Change Order or any Claim for an adjustment in the Contract Times will be determined in accordance with the provisions of this Article 12.

12.03 *Delays*

A. Where Contractor is prevented from completing any part of the Work within the Contract Times due to delay beyond the control of Contractor, the Contract Times will be extended in an amount equal to the time lost due to such delay if a Claim is made therefor as provided in Paragraph 12.02.A. Delays beyond the control of Contractor shall include, but not be limited to, acts or neglect by Owner, acts or neglect of utility owners or other contractors performing other work as contemplated by Article 7, fires, floods, epidemics, abnormal weather conditions, or acts of God.

B. If Owner, Engineer, or other contractors or utility owners performing other work for Owner as contemplated by Article 7, or anyone for whom Owner is responsible, delays, disrupts, or interferes with the performance or progress of the Work, then Contractor shall be entitled to an equitable adjustment in the Contract Price or the Contract Times , or both. Contractor's entitlement to an adjustment of the Contract Times is conditioned on such adjustment being essential to Contractor's ability to complete the Work within the Contract Times.

C If Contractor is delayed in the performance or progress of the Work by fire, flood, epidemic, abnormal weather conditions, acts of God, acts or failures to act of utility owners not under the control of Owner, or other causes not the fault of and beyond control of Owner and Contractor, then Contractor shall be entitled to an equitable adjustment in Contract Times, if such adjustment is essential to Contractor's ability to complete the Work within the Contract Times. Such an adjustment shall be Contractor's sole and exclusive remedy for the delays described in this Paragraph 12.03.C.

D. Owner, Engineer and the Related Entities of each of them shall not be liable to Contractor for any claims, costs, losses, or damages (including but not limited to all fees and charges of Engineers, architects, attorneys, and other professionals and all court or arbitration or other dispute resolution costs) sustained by Contractor on or in connection with any other project or anticipated project.

E. Contractor shall not be entitled to an adjustment in Contract Price or Contract Times for delays within the control of Contractor. Delays attributable to and within the control of a Subcontractor or Supplier shall be deemed to be delays within the control of Contractor.

ARTICLE 13 - TESTS AND INSPECTIONS; CORRECTION, REMOVAL OR ACCEPTANCE OF DEFECTIVE WORK

13.01 *Notice of Defects*

A. Prompt notice of all defective Work of which Owner or Engineer has actual knowledge will be given to Contractor. All defective Work may be rejected, corrected, or accepted as provided in this Article 13.

13.02 *Access to Work*

A. Owner, Engineer, their consultants and other representatives and personnel of Owner, independent testing laboratories, and governmental agencies with jurisdictional interests will have access to the Site and the Work at reasonable times for their observation, inspecting, and testing. Contractor shall provide them proper and safe conditions for such access and advise them of Contractor's Site safety procedures and programs so that they may comply therewith as applicable.

13.03 *Tests and Inspections*

A. Contractor shall give Engineer timely notice of readiness of the Work for all required inspections, tests, or approvals and shall cooperate with inspection and testing personnel to facilitate required inspections or tests.

B. Owner shall employ and pay for the services of an independent testing laboratory to perform all inspections, tests, or approvals required by the Contract Documents except:

1. for inspections, tests, or approvals covered by Paragraphs 13.03.C and 13.03.D below;

2. that costs incurred in connection with tests or inspections conducted pursuant to Paragraph 13.04.B shall be paid as provided in said Paragraph 13.04.C; and

3. as otherwise specifically provided in the Contract Documents.

C. If Laws or Regulations of any public body having jurisdiction require any Work (or part thereof) specifically to be inspected, tested, or approved by an employee or other representative of such public body, Contractor shall assume full responsibility for arranging and obtaining such inspections, tests, or approvals, pay all costs in connection therewith, and furnish Engineer the required certificates of inspection or approval.

D. Contractor shall be responsible for arranging and obtaining and shall pay all costs in connection with any inspections, tests, or approvals required for Owner's and Engineer's acceptance of materials or equipment to

Copyright © 2002 National Society of Professional Engineers for EJCDC. All rights reserved.

be incorporated in the Work; or acceptance of materials, mix designs, or equipment submitted for approval prior to Contractor's purchase thereof for incorporation in the Work. Such inspections, tests, or approvals shall be performed by organizations acceptable to Owner and Engineer.

E. If any Work (or the work of others) that is to be inspected, tested, or approved is covered by Contractor without written concurrence of Engineer, it must, if requested by Engineer, be uncovered for observation.

F. Uncovering Work as provided in Paragraph 13.03.E shall be at Contractor's expense unless Contractor has given Engineer timely notice of Contractor's intention to cover the same and Engineer has not acted with reasonable promptness in response to such notice.

13.04 *Uncovering Work*

A. If any Work is covered contrary to the written request of Engineer, it must, if requested by Engineer, be uncovered for Engineer's observation and replaced at Contractor's expense.

B. If Engineer considers it necessary or advisable that covered Work be observed by Engineer or inspected or tested by others, Contractor, at Engineer's request, shall uncover, expose, or otherwise make available for observation, inspection, or testing as Engineer may require, that portion of the Work in question, furnishing all necessary labor, material, and equipment.

C. If it is found that the uncovered Work is defective, Contractor shall pay all claims, costs, losses, and damages (including but not limited to all fees and charges of engineers, architects, attorneys, and other professionals and all court or arbitration or other dispute resolution costs) arising out of or relating to such uncovering, exposure, observation, inspection, and testing, and of satisfactory replacement or reconstruction (including but not limited to all costs of repair or replacement of work of others); and Owner shall be entitled to an appropriate decrease in the Contract Price. If the parties are unable to agree as to the amount thereof, Owner may make a Claim therefor as provided in Paragraph 10.05.

D. If, the uncovered Work is not found to be defective, Contractor shall be allowed an increase in the Contract Price or an extension of the Contract Times, or both, directly attributable to such uncovering, exposure, observation, inspection, testing, replacement, and reconstruction. If the parties are unable to agree as to the amount or extent thereof, Contractor may make a Claim therefor as provided in Paragraph 10.05.

13.05 *Owner May Stop the Work*

A. If the Work is defective, or Contractor fails to supply sufficient skilled workers or suitable materials or equipment, or fails to perform the Work in such a way that the completed Work will conform to the Contract Documents, Owner may order Contractor to stop the Work, or any portion thereof, until the cause for such order has been eliminated; however, this right of Owner to stop the Work shall not give rise to any duty on the part of Owner to exercise this right for the benefit of Contractor, any Subcontractor, any Supplier, any other individual or entity, or any surety for, or employee or agent of any of them.

13.06 *Correction or Removal of Defective Work*

A. Promptly after receipt of notice, Contractor shall correct all defective Work, whether or not fabricated, installed, or completed, or, if the Work has been rejected by Engineer, remove it from the Project and replace it with Work that is not defective. Contractor shall pay all claims, costs, losses, and damages (including but not limited to all fees and charges of engineers, architects, attorneys, and other professionals and all court or arbitration or other dispute resolution costs) arising out of or relating to such correction or removal (including but not limited to all costs of repair or replacement of work of others).

B. When correcting defective Work under the terms of this Paragraph 13.06 or Paragraph 13.07, Contractor shall take no action that would void or otherwise impair Owner's special warranty and guarantee, if any, on said Work.

13.07 *Correction Period*

A. If within one year after the date of Substantial Completion (or such longer period of time as may be prescribed by the terms of any applicable special guarantee required by the Contract Documents) or by any specific provision of the Contract Documents, any Work is found to be defective, or if the repair of any damages to the land or areas made available for Contractor's use by Owner or permitted by Laws and Regulations as contemplated in Paragraph 6.11.A is found to be defective, Contractor shall promptly, without cost to Owner and in accordance with Owner's written instructions:

1. repair such defective land or areas; or

2. correct such defective Work; or

3. if the defective Work has been rejected by Owner, remove it from the Project and replace it with Work that is not defective, and

4. satisfactorily correct or repair or remove and replace any damage to other Work, to the work of others or other land or areas resulting therefrom.

Copyright © 2002 National Society of Professional Engineers for EJCDC. All rights reserved.

B. If Contractor does not promptly comply with the terms of Owner's written instructions, or in an emergency where delay would cause serious risk of loss or damage, Owner may have the defective Work corrected or repaired or may have the rejected Work removed and replaced. All claims, costs, losses, and damages (including but not limited to all fees and charges of engineers, architects, attorneys, and other professionals and all court or arbitration or other dispute resolution costs) arising out of or relating to such correction or repair or such removal and replacement (including but not limited to all costs of repair or replacement of work of others) will be paid by Contractor.

C. In special circumstances where a particular item of equipment is placed in continuous service before Substantial Completion of all the Work, the correction period for that item may start to run from an earlier date if so provided in the Specifications .

D. Where defective Work (and damage to other Work resulting therefrom) has been corrected or removed and replaced under this Paragraph 13.07, the correction period hereunder with respect to such Work will be extended for an additional period of one year after such correction or removal and replacement has been satisfactorily completed.

E. Contractor's obligations under this Paragraph 13.07 are in addition to any other obligation or warranty. The provisions of this Paragraph 13.07 shall not be construed as a substitute for or a waiver of the provisions of any applicable statute of limitation or repose.

13.08 *Acceptance of Defective Work*

A. If, instead of requiring correction or removal and replacement of defective Work, Owner (and, prior to Engineer's recommendation of final payment, Engineer) prefers to accept it, Owner may do so. Contractor shall pay all claims, costs, losses, and damages (including but not limited to all fees and charges of engineers, architects, attorneys, and other professionals and all court or arbitration or other dispute resolution costs) attributable to Owner's evaluation of and determination to accept such defective Work (such costs to be approved by Engineer as to reasonableness) and the diminished value of the Work to the extent not otherwise paid by Contractor pursuant to this sentence. If any such acceptance occurs prior to Engineer's recommendation of final payment, a Change Order will be issued incorporating the necessary revisions in the Contract Documents with respect to the Work, and Owner shall be entitled to an appropriate decrease in the Contract Price, reflecting the diminished value of Work so accepted. If the parties are unable to agree as to the amount thereof, Owner may make a Claim therefor as provided in Paragraph 10.05. If the acceptance occurs after such recommendation, an appropriate amount will be paid by Contractor to Owner.

13.09 *Owner May Correct Defective Work*

A. If Contractor fails within a reasonable time after written notice from Engineer to correct defective Work or to remove and replace rejected Work as required by Engineer in accordance with Paragraph 13.06.A, or if Contractor fails to perform the Work in accordance with the Contract Documents, or if Contractor fails to comply with any other provision of the Contract Documents, Owner may, after seven days written notice to Contractor, correct or remedy any such deficiency.

B. In exercising the rights and remedies under this Paragraph 13.09, Owner shall proceed expeditiously. In connection with such corrective or remedial action, Owner may exclude Contractor from all or part of the Site, take possession of all or part of the Work and suspend Contractor's services related thereto, take possession of Contractor's tools, appliances, construction equipment and machinery at the Site, and incorporate in the Work all materials and equipment stored at the Site or for which Owner has paid Contractor but which are stored elsewhere. Contractor shall allow Owner, Owner's representatives, agents and employees, Owner's other contractors, and Engineer and Engineer's consultants access to the Site to enable Owner to exercise the rights and remedies under this Paragraph.

C. All claims, costs, losses, and damages (including but not limited to all fees and charges of engineers, architects, attorneys, and other professionals and all court or arbitration or other dispute resolution costs) incurred or sustained by Owner in exercising the rights and remedies under this Paragraph 13.09 will be charged against Contractor, and a Change Order will be issued incorporating the necessary revisions in the Contract Documents with respect to the Work; and Owner shall be entitled to an appropriate decrease in the Contract Price. If the parties are unable to agree as to the amount of the adjustment, Owner may make a Claim therefor as provided in Paragraph 10.05. Such claims, costs, losses and damages will include but not be limited to all costs of repair, or replacement of work of others destroyed or damaged by correction, removal, or replacement of Contractor's defective Work.

D. Contractor shall not be allowed an extension of the Contract Times because of any delay in the performance of the Work attributable to the exercise by Owner of Owner's rights and remedies under this Paragraph 13.09.

ARTICLE 14 - PAYMENTS TO CONTRACTOR AND COMPLETION

14.01 *Schedule of Values*

A. The Schedule of Values established as provided in Paragraph 2.07.A will serve as the basis for progress

Copyright © 2002 National Society of Professional Engineers for EJCDC. All rights reserved.

payments and will be incorporated into a form of Application for Payment acceptable to Engineer. Progress payments on account of Unit Price Work will be based on the number of units completed.

14.02 *Progress Payments*

A. Applications for Payments

1. At least 20 days before the date established in the Agreement for each progress payment (but not more often than once a month), Contractor shall submit to Engineer for review an Application for Payment filled out and signed by Contractor covering the Work completed as of the date of the Application and accompanied by such supporting documentation as is required by the Contract Documents. If payment is requested on the basis of materials and equipment not incorporated in the Work but delivered and suitably stored at the Site or at another location agreed to in writing, the Application for Payment shall also be accompanied by a bill of sale, invoice, or other documentation warranting that Owner has received the materials and equipment free and clear of all Liens and evidence that the materials and equipment are covered by appropriate property insurance or other arrangements to protect Owner's interest therein, all of which must be satisfactory to Owner.

2. Beginning with the second Application for Payment, each Application shall include an affidavit of Contractor stating that all previous progress payments received on account of the Work have been applied on account to discharge Contractor's legitimate obligations associated with prior Applications for Payment.

3. The amount of retainage with respect to progress payments will be as stipulated in the Agreement.

B. *Review of Applications*

1. Engineer will, within 10 days after receipt of each Application for Payment, either indicate in writing a recommendation of payment and present the Application to Owner or return the Application to Contractor indicating in writing Engineer's reasons for refusing to recommend payment. In the latter case, Contractor may make the necessary corrections and resubmit the Application.

2. Engineer's recommendation of any payment requested in an Application for Payment will constitute a representation by Engineer to Owner, based on Engineer's observations on the Site of the executed Work as an experienced and qualified design professional and on Engineer's review of the Application for Payment and the accompanying data and schedules, that to the best of Engineer's knowledge, information and belief:

a. the Work has progressed to the point indicated;

b. the quality of the Work is generally in accordance with the Contract Documents (subject to an evaluation of the Work as a functioning whole prior to or upon Substantial Completion, to the results of any subsequent tests called for in the Contract Documents, to a final determination of quantities and classifications for Unit Price Work under Paragraph 9.07, and to any other qualifications stated in the recommendation); and

c. the conditions precedent to Contractor's being entitled to such payment appear to have been fulfilled in so far as it is Engineer's responsibility to observe the Work.

3. By recommending any such payment Engineer will not thereby be deemed to have represented that:

a. inspections made to check the quality or the quantity of the Work as it has been performed have been exhaustive, extended to every aspect of the Work in progress, or involved detailed inspections of the Work beyond the responsibilities specifically assigned to Engineer in the Contract Documents; or

b. that there may not be other matters or issues between the parties that might entitle Contractor to be paid additionally by Owner or entitle Owner to withhold payment to Contractor.

4. Neither Engineer's review of Contractor's Work for the purposes of recommending payments nor Engineer's recommendation of any payment, including final payment, will impose responsibility on Engineer:

a. to supervise, direct, or control the Work, or

b. for the means, methods, techniques, sequences, or procedures of construction, or the safety precautions and programs incident thereto, or

c. for Contractor's failure to comply with Laws and Regulations applicable to Contractor's performance of the Work, or

d. to make any examination to ascertain how or for what purposes Contractor has used the moneys paid on account of the Contract Price, or

e. to determine that title to any of the Work, materials, or equipment has passed to Owner free and clear of any Liens.

5. Engineer may refuse to recommend the whole or any part of any payment if, in Engineer's opinion, it would be incorrect to make the representations to Owner stated in Paragraph 14.02.B.2. Engineer may also refuse to recommend any such payment or, because of subsequently discovered evidence or the results of subsequent

Copyright © 2002 National Society of Professional Engineers for EJCDC. All rights reserved.

inspections or tests, revise or revoke any such payment recommendation previously made, to such extent as may be necessary in Engineer's opinion to protect Owner from loss because:

a. the Work is defective, or completed Work has been damaged, requiring correction or replacement;

b. the Contract Price has been reduced by Change Orders;

c. Owner has been required to correct defective Work or complete Work in accordance with Paragraph 13.09; or

d. Engineer has actual knowledge of the occurrence of any of the events enumerated in Paragraph 15.02.A.

C. *Payment Becomes Due*

1. Ten days after presentation of the Application for Payment to Owner with Engineer's recommendation, the amount recommended will (subject to the provisions of Paragraph 14.02.D) become due, and when due will be paid by Owner to Contractor.

D. *Reduction in Payment*

1. Owner may refuse to make payment of the full amount recommended by Engineer because:

a. claims have been made against Owner on account of Contractor's performance or furnishing of the Work;

b. Liens have been filed in connection with the Work, except where Contractor has delivered a specific bond satisfactory to Owner to secure the satisfaction and discharge of such Liens;

c. there are other items entitling Owner to a set-off against the amount recommended; or

d. Owner has actual knowledge of the occurrence of any of the events enumerated in Paragraphs 14.02.B.5.a through 14.02.B.5.c or Paragraph 15.02.A.

2. If Owner refuses to make payment of the full amount recommended by Engineer, Owner will give Contractor immediate written notice (with a copy to Engineer) stating the reasons for such action and promptly pay Contractor any amount remaining after deduction of the amount so withheld. Owner shall promptly pay Contractor the amount so withheld, or any adjustment thereto agreed to by Owner and Contractor, when Contractor corrects to Owner's satisfaction the reasons for such action.

3. If it is subsequently determined that Owner's refusal of payment was not justified, the amount wrongfully withheld shall be treated as an amount due as determined by Paragraph 14.02.C.1.

14.03 *Contractor's Warranty of Title*

A. Contractor warrants and guarantees that title to all Work, materials, and equipment covered by any Application for Payment, whether incorporated in the Project or not, will pass to Owner no later than the time of payment free and clear of all Liens.

14.04 *Substantial Completion*

A. When Contractor considers the entire Work ready for its intended use Contractor shall notify Owner and Engineer in writing that the entire Work is substantially complete (except for items specifically listed by Contractor as incomplete) and request that Engineer issue a certificate of Substantial Completion.

B. Promptly after Contractor's notification, , Owner, Contractor, and Engineer shall make an inspection of the Work to determine the status of completion. If Engineer does not consider the Work substantially complete, Engineer will notify Contractor in writing giving the reasons therefor.

C. If Engineer considers the Work substantially complete, Engineer will deliver to Owner a tentative certificate of Substantial Completion which shall fix the date of Substantial Completion. There shall be attached to the certificate a tentative list of items to be completed or corrected before final payment. Owner shall have seven days after receipt of the tentative certificate during which to make written objection to Engineer as to any provisions of the certificate or attached list. If, after considering such objections, Engineer concludes that the Work is not substantially complete, Engineer will within 14 days after submission of the tentative certificate to Owner notify Contractor in writing, stating the reasons therefor. If, after consideration of Owner's objections, Engineer considers the Work substantially complete, Engineer will within said 14 days execute and deliver to Owner and Contractor a definitive certificate of Substantial Completion (with a revised tentative list of items to be completed or corrected) reflecting such changes from the tentative certificate as Engineer believes justified after consideration of any objections from Owner.

D. At the time of delivery of the tentative certificate of Substantial Completion, Engineer will deliver to Owner and Contractor a written recommendation as to division of responsibilities pending final payment between Owner and Contractor with respect to security, operation, safety, and protection of the Work, maintenance, heat, utilities, insurance, and warranties and guarantees. Unless Owner and Contractor agree otherwise in writing and so inform Engineer in writing prior to Engineer's issuing the definitive certificate of Substantial

Copyright © 2002 National Society of Professional Engineers for EJCDC. All rights reserved.

Completion, Engineer's aforesaid recommendation will be binding on Owner and Contractor until final payment.

E. Owner shall have the right to exclude Contractor from the Site after the date of Substantial Completion subject to allowing Contractor reasonable access to complete or correct items on the tentative list.

14.05 *Partial Utilization*

A. Prior to Substantial Completion of all the Work, Owner may use or occupy any substantially completed part of the Work which has specifically been identified in the Contract Documents, or which Owner, Engineer, and Contractor agree constitutes a separately functioning and usable part of the Work that can be used by Owner for its intended purpose without significant interference with Contractor's performance of the remainder of the Work, subject to the following conditions.

1. Owner at any time may request Contractor in writing to permit Owner to use or occupy any such part of the Work which Owner believes to be ready for its intended use and substantially complete. If and when Contractor agrees that such part of the Work is substantially complete, Contractor will certify to Owner and Engineer that such part of the Work is substantially complete and request Engineer to issue a certificate of Substantial Completion for that part of the Work.

2. Contractor at any time may notify Owner and Engineer in writing that Contractor considers any such part of the Work ready for its intended use and substantially complete and request Engineer to issue a certificate of Substantial Completion for that part of the Work.

3. Within a reasonable time after either such request, Owner, Contractor, and Engineer shall make an inspection of that part of the Work to determine its status of completion. If Engineer does not consider that part of the Work to be substantially complete, Engineer will notify Owner and Contractor in writing giving the reasons therefor. If Engineer considers that part of the Work to be substantially complete, the provisions of Paragraph 14.04 will apply with respect to certification of Substantial Completion of that part of the Work and the division of responsibility in respect thereof and access thereto.

4. No use or occupancy or separate operation of part of the Work may occur prior to compliance with the requirements of Paragraph 5.10 regarding property insurance.

14.06 *Final Inspection*

A. Upon written notice from Contractor that the entire Work or an agreed portion thereof is complete, Engineer will promptly make a final inspection with Owner and Contractor and will notify Contractor in writing of all particulars in which this inspection reveals that the Work is incomplete or defective. Contractor shall immediately take such measures as are necessary to complete such Work or remedy such deficiencies.

14.07 *Final Payment*

A. Application for Payment

1. After Contractor has, in the opinion of Engineer, satisfactorily completed all corrections identified during the final inspection and has delivered, in accordance with the Contract Documents, all maintenance and operating instructions, schedules, guarantees, bonds, certificates or other evidence of insurance certificates of inspection, marked-up record documents (as provided in Paragraph 6.12), and other documents, Contractor may make application for final payment following the procedure for progress payments.

2. The final Application for Payment shall be accompanied (except as previously delivered) by:

a. all documentation called for in the Contract Documents, including but not limited to the evidence of insurance required by Paragraph 5.04.B.7;

b. consent of the surety, if any, to final payment;

c. a list of all Claims against Owner that Contractor believes are unsettled; and

d. complete and legally effective releases or waivers (satisfactory to Owner) of all Lien rights arising out of or Liens filed in connection with the Work.

3. In lieu of the releases or waivers of Liens specified in Paragraph 14.07.A.2 and as approved by Owner, Contractor may furnish receipts or releases in full and an affidavit of Contractor that: (i) the releases and receipts include all labor, services, material, and equipment for which a Lien could be filed; and (ii) all payrolls, material and equipment bills, and other indebtedness connected with the Work for which Owner or Owner's property might in any way be responsible have been paid or otherwise satisfied. If any Subcontractor or Supplier fails to furnish such a release or receipt in full, Contractor may furnish a bond or other collateral satisfactory to Owner to indemnify Owner against any Lien.

B. *Engineer's Review of Application and Acceptance*

1. If, on the basis of Engineer's observation of the Work during construction and final inspection, and Engineer's review of the final Application for Payment and accompanying documentation as required by the Contract Documents, Engineer is satisfied that the Work has been completed and Contractor's other obligations

Copyright © 2002 National Society of Professional Engineers for EJCDC. All rights reserved.

under the Contract Documents have been fulfilled, Engineer will, within ten days after receipt of the final Application for Payment, indicate in writing Engineer's recommendation of payment and present the Application for Payment to Owner for payment. At the same time Engineer will also give written notice to Owner and Contractor that the Work is acceptable subject to the provisions of Paragraph 14.09. Otherwise, Engineer will return the Application for Payment to Contractor, indicating in writing the reasons for refusing to recommend final payment, in which case Contractor shall make the necessary corrections and resubmit the Application for Payment.

C. Payment Becomes Due

1. Thirty days after the presentation to Owner of the Application for Payment and accompanying documentation, the amount recommended by Engineer, less any sum Owner is entitled to set off against Engineer's recommendation, including but not limited to liquidated damages, will become due and , will be paid by Owner to Contractor.

14.08 *Final Completion Delayed*

A. If, through no fault of Contractor, final completion of the Work is significantly delayed, and if Engineer so confirms, Owner shall, upon receipt of Contractor's final Application for Payment (for Work fully completed and accepted) and recommendation of Engineer, and without terminating the Contract, make payment of the balance due for that portion of the Work fully completed and accepted. If the remaining balance to be held by Owner for Work not fully completed or corrected is less than the retainage stipulated in the Agreement, and if bonds have been furnished as required in Paragraph 5.01, the written consent of the surety to the payment of the balance due for that portion of the Work fully completed and accepted shall be submitted by Contractor to Engineer with the Application for such payment. Such payment shall be made under the terms and conditions governing final payment, except that it shall not constitute a waiver of Claims.

14.09 *Waiver of Claims*

A. The making and acceptance of final payment will constitute:

1. a waiver of all Claims by Owner against Contractor, except Claims arising from unsettled Liens, from defective Work appearing after final inspection pursuant to Paragraph 14.06, from failure to comply with the Contract Documents or the terms of any special guarantees specified therein, or from Contractor's continuing obligations under the Contract Documents; and

2. a waiver of all Claims by Contractor against Owner other than those previously made in accordance with the requirements herein and expressly acknowledged by Owner in writing as still unsettled.

ARTICLE 15 - SUSPENSION OF WORK AND TERMINATION

15.01 *Owner May Suspend Work*

A. At any time and without cause, Owner may suspend the Work or any portion thereof for a period of not more than 90 consecutive days by notice in writing to Contractor and Engineer which will fix the date on which Work will be resumed. Contractor shall resume the Work on the date so fixed. Contractor shall be granted an adjustment in the Contract Price or an extension of the Contract Times, or both, directly attributable to any such suspension if Contractor makes a Claim therefor as provided in Paragraph 10.05.

15.02 *Owner May Terminate for Cause*

A. The occurrence of any one or more of the following events will justify termination for cause:

1. Contractor's persistent failure to perform the Work in accordance with the Contract Documents (including, but not limited to, failure to supply sufficient skilled workers or suitable materials or equipment or failure to adhere to the Progress Schedule established under Paragraph 2.07 as adjusted from time to time pursuant to Paragraph 6.04);

2. Contractor's disregard of Laws or Regulations of any public body having jurisdiction;

3. Contractor's disregard of the authority of Engineer; or

4. Contractor's violation in any substantial way of any provisions of the Contract Documents.

B. If one or more of the events identified in Paragraph 15.02.A occur, Owner may, after giving Contractor (and surety) seven days written notice of its intent to terminate the services of Contractor:

1. exclude Contractor from the Site, and take possession of the Work and of all Contractor's tools, appliances, construction equipment, and machinery at the Site, and use the same to the full extent they could be used by Contractor (without liability to Contractor for trespass or conversion),

2. incorporate in the Work all materials and equipment stored at the Site or for which Owner has paid Contractor but which are stored elsewhere, and

Copyright © 2002 National Society of Professional Engineers for EJCDC. All rights reserved.

3. complete the Work as Owner may deem expedient.

C. If Owner proceeds as provided in Paragraph 15.02.B, Contractor shall not be entitled to receive any further payment until the Work is completed. If the unpaid balance of the Contract Price exceeds all claims, costs, losses, and damages (including but not limited to all fees and charges of engineers, architects, attorneys, and other professionals and all court or arbitration or other dispute resolution costs) sustained by Owner arising out of or relating to completing the Work, such excess will be paid to Contractor. If such claims, costs, losses, and damages exceed such unpaid balance, Contractor shall pay the difference to Owner. Such claims, costs, losses, and damages incurred by Owner will be reviewed by Engineer as to their reasonableness and, when so approved by Engineer, incorporated in a Change Order. When exercising any rights or remedies under this Paragraph Owner shall not be required to obtain the lowest price for the Work performed.

D. Notwithstanding Paragraphs 15.02.B and 15.02.C, Contractor's services will not be terminated if Contractor begins within seven days of receipt of notice of intent to terminate to correct its failure to perform and proceeds diligently to cure such failure within no more than 30 days of receipt of said notice.

E. Where Contractor's services have been so terminated by Owner, the termination will not affect any rights or remedies of Owner against Contractor then existing or which may thereafter accrue. Any retention or payment of moneys due Contractor by Owner will not release Contractor from liability.

F. If and to the extent that Contractor has provided a performance bond under the provisions of Paragraph 5.01.A, the termination procedures of that bond shall supersede the provisions of Paragraphs 15.02.B, and 15.02.C.

15.03 *Owner May Terminate For Convenience*

A. Upon seven days written notice to Contractor and Engineer, Owner may, without cause and without prejudice to any other right or remedy of Owner, terminate the Contract. In such case, Contractor shall be paid for (without duplication of any items):

1. completed and acceptable Work executed in accordance with the Contract Documents prior to the effective date of termination, including fair and reasonable sums for overhead and profit on such Work;

2. expenses sustained prior to the effective date of termination in performing services and furnishing labor, materials, or equipment as required by the Contract Documents in connection with uncompleted Work, plus fair and reasonable sums for overhead and profit on such expenses;

3. all claims, costs, losses, and damages (including but not limited to all fees and charges of engineers, architects, attorneys, and other professionals and all court or arbitration or other dispute resolution costs) incurred in settlement of terminated contracts with Subcontractors, Suppliers, and others; and

4. reasonable expenses directly attributable to termination.

B. Contractor shall not be paid on account of loss of anticipated profits or revenue or other economic loss arising out of or resulting from such termination.

15.04 *Contractor May Stop Work or Terminate*

A. If, through no act or fault of Contractor, (i) the Work is suspended for more than 90 consecutive days by Owner or under an order of court or other public authority, or (ii) Engineer fails to act on any Application for Payment within 30 days after it is submitted, or (iii) Owner fails for 30 days to pay Contractor any sum finally determined to be due, then Contractor may, upon seven days written notice to Owner and Engineer, and provided Owner or Engineer do not remedy such suspension or failure within that time, terminate the Contract and recover from Owner payment on the same terms as provided in Paragraph 15.03.

B. In lieu of terminating the Contract and without prejudice to any other right or remedy, if Engineer has failed to act on an Application for Payment within 30 days after it is submitted, or Owner has failed for 30 days to pay Contractor any sum finally determined to be due, Contractor may, seven days after written notice to Owner and Engineer, stop the Work until payment is made of all such amounts due Contractor, including interest thereon. The provisions of this Paragraph 15.04 are not intended to preclude Contractor from making a Claim under Paragraph 10.05 for an adjustment in Contract Price or Contract Times or otherwise for expenses or damage directly attributable to Contractor's stopping the Work as permitted by this Paragraph.

ARTICLE 16 - DISPUTE RESOLUTION

16.01 *Methods and Procedures*

A. Either Owner or Contractor may request mediation of any Claim submitted to Engineer for a decision under Paragraph 10.05 before such decision becomes final and binding. The mediation will be

Copyright © 2002 National Society of Professional Engineers for EJCDC. All rights reserved.

governed by the Construction Industry Mediation Rules of the American Arbitration Association in effect as of the Effective Date of the Agreement. The request for mediation shall be submitted in writing to the American Arbitration Association and the other party to the Contract. Timely submission of the request shall stay the effect of Paragraph 10.05.E.

B. Owner and Contractor shall participate in the mediation process in good faith. The process shall be concluded within 60 days of filing of the request. The date of termination of the mediation shall be determined by application of the mediation rules referenced above.

C. If the Claim is not resolved by mediation, Engineer's action under Paragraph 10.05.C or a denial pursuant to Paragraphs 10.05.C.3 or 10.05.D shall become final and binding 30 days after termination of the mediation unless, within that time period, Owner or Contractor:

1. elects in writing to invoke any dispute resolution process provided for in the Supplementary Conditions, or

2. agrees with the other party to submit the Claim to another dispute resolution process, or

3. gives written notice to the other party of their intent to submit the Claim to a court of competent jurisdiction.

ARTICLE 17 - MISCELLANEOUS

17.01 *Giving Notice*

A. Whenever any provision of the Contract Documents requires the giving of written notice, it will be deemed to have been validly given if:

1. delivered in person to the individual or to a member of the firm or to an officer of the corporation for whom it is intended, or

2. delivered at or sent by registered or certified mail, postage prepaid, to the last business address known to the giver of the notice.

17.02 *Computation of Times*

A. When any period of time is referred to in the Contract Documents by days, it will be computed to exclude the first and include the last day of such period. If the last day of any such period falls on a Saturday or Sunday or on a day made a legal holiday by the law of the applicable jurisdiction, such day will be omitted from the computation.

17.03 *Cumulative Remedies*

A. The duties and obligations imposed by these General Conditions and the rights and remedies available hereunder to the parties hereto are in addition to, and are not to be construed in any way as a limitation of, any rights and remedies available to any or all of them which are otherwise imposed or available by Laws or Regulations, by special warranty or guarantee, or by other provisions of the Contract Documents. The provisions of this Paragraph will be as effective as if repeated specifically in the Contract Documents in connection with each particular duty, obligation, right, and remedy to which they apply.

17.04 *Survival of Obligations*

A. All representations, indemnifications, warranties, and guarantees made in, required by, or given in accordance with the Contract Documents, as well as all continuing obligations indicated in the Contract Documents, will survive final payment, completion, and acceptance of the Work or termination or completion of the Contract or termination of the services of Contractor.

17.05 *Controlling Law*

A. This Contract is to be governed by the law of the state in which the Project is located.

17.06 *Headings*

A. Article and paragraph headings are inserted for convenience only and do not constitute parts of these General Conditions.

Copyright © 2002 National Society of Professional Engineers for EJCDC. All rights reserved.

SUPPLEMENTARY CONDITIONS

TABLE OF CONTENTS

PART I – AMENDMENTS TO THE GENERAL CONDITIONS

ARTICLE/SECTION NUMBER	TITLE
1	Definitions
2	Preliminary Matters
3	Contract Documents; Intent, Amending and Reuse
4	Availability of Lands; Physical Conditions Reference Points
5	Bonds and Insurance
6	Contractor's Responsibilities
8	Owner's Responsibilities
9	Engineer's Status During Construction
11	Change in Contract Price
12	Change in Contract Time
13	Warranty & Guarantee, Tests & Inspections, Correction, Removal or Acceptance of Defective Work
14	Payments to Contractor and Completion
15	Suspension of Work and Termination
16	Arbitration
17	Miscellaneous

PART II - STATUTORY REQUIREMENTS

1	Statutory Requirements in General
2	Deleted
3	Deleted
4	Safety & Health Regulations
5	Permits
6	Change Orders
7	Commonwealth of Mass. Laws Deemed Inserted.
8	Commonwealth of Mass./City of Quincy Equal Employment Opportunity Anti-Discrimination Requirements
9	City of Quincy Blasting Ordinance

SUPPLEMENTARY CONDITIONS – PART I

These Supplementary Conditions amend or supplement the Standard General Conditions of the Construction Contract, EJCDC® C-700 (2002 Edition), as indicated below. All provisions that are not so amended or supplemented remain in full force and effect.

The terms used in these Supplementary Conditions have the meanings stated in the General Conditions. Additional terms used in these Supplementary Conditions have the meanings stated below, which are applicable to both the singular and plural thereof.

The address system used in these Supplementary Conditions is the same as the address system used in the General Conditions, with the prefix "SC" added thereto.

ARTICLE 1 – DEFINITIONS AND TERMINOLOGY

SC 1.01(A)(17) Amend the second sentence of Paragraph 1.01(A)(17) to read as follows:

Shop Drawings and other Contractor submittals are not Drawings or Plans as so defined

SC 1.01(A)(44) Delete Paragraph 1.01 (A)(44) in its entirety and insert the following in its place:

An individual or entity, including filed sub-bidders, having a direct contract with Contractor or with any other Subcontractor for the performance of a part of the Work at the Site.

SC 1.01(A)(45) Add the following language to the end of the first sentence of Paragraph 1.01(A)(45):

,and either (i) the Work required by the Contract has been completed except for work having a contract price of less than one percent of the then-adjusted total Contract Sum, or (ii) substantially all of the Work has been completed and opened for public use except for minor incomplete or unsatisfactory work items that do not materially impair the usefulness of the Work required by the Contract.

SC-1.01. Add to the list of definitions in Paragraph 1.01.A by inserting the following as numbered items in their proper alphabetical positions:

Conditions of the Contract: The combined General Conditions and Supplementary Conditions

Plans: Shall have the identical definition as the term “Drawings” and may be used interchangeably in the Contract Documents.

Proposal: Shall have the identical definition as the term “Bid” and may be used interchangeably in the Contract Documents.

Site: The specific area adjacent to and including the area upon which the construction work is performed.

Lump Sum Work - Work to be paid for on the basis of a fixed fee for the materials, labor and all incidentals required to provide the bid item as defined in the specifications.

ARTICLE 2 – PRELIMINARY MATTERS

SC-2.01 Revise Paragraph 2.01A to read as follows:

Contractor shall deliver to the Owner, prior to execution of the Contract, such Bonds and Insurance as Contractor may be required to furnish.

SC-2.02 Revise Paragraph 2.02 to read as follows:

Owner shall furnish to Contractor up to five copies of the Contract Documents as are reasonably necessary for the execution of the Work. Additional copies will be furnished, upon request, at the cost of $100.00 per set.

SC-2.05 In the final line of Paragraph 2.05(A)(3), add the following after "Work:"

, which will be confirmed in writing by Contractor at the time of submission.

SC2.05(A)(3) Add a new paragraph immediately after paragraph 2.05(A)(3) of the General Conditions, which is to read as follows:

A(4). A complete listing of equipment and materials, and shall determine lead time between placing orders and delivery including normal allowances of time for processing and correcting Shop Drawings. The construction schedule shall reflect these delivery dates. All orders for long lead items shall be placed within thirty- (30) days after Effective Date of the Agreement if delivery is critical to scheduling. Failure to place orders promptly will result in full liability for liquidated damages if schedules are not met.

SC-2.05(C) Revise Paragraph 2.05(C) to read as follows:

C. Evidence of Insurance: Before any Work at the Site is started, Contractor shall deliver to the Owner, with copies of additional insured identified in the Supplementary Conditions, certificates of insurance (and other evidence of insurance which the Owner or any additional insured may reasonably request) which Contractor is required to purchase and maintain in accordance with Article 5.

SC-2.08 Insert new Paragraph 2.08 as follows:

2.08 Compliance with Laws. This Contract is subject to all Laws and Regulations of the United States of America, the Commonwealth of Massachusetts, the City of Quincy and other public authorities, and all amendments thereto, and where any requirements contained herein do not conform to nor are inconsistent with such Laws and Regulations to which the Contract is subject or by which it is governed, such Laws and Regulations shall have precedence over any matters set forth herein. Statutes, regulations, and portions and summaries thereof which are set forth or referred to in the Contract Documents shall be construed to include all amendments thereto effective as of the date of issuance of the Invitation to Bid for the Contract. The Owner makes no representation as to and assumes no responsibility for the correctness or completeness of such statutory matters referred to or set forth herein.

ARTICLE 3 - CONTRACT DOCUMENTS; INTENT, AMENDING,

SC-3.01 Add the following at the end of Paragraph 3.01(A):

The Contract Documents comprise the entire agreement between Owner and Contractor concerning the Work. The Contract Documents will be construed in accordance with the law of the Commonwealth of Massachusetts. If any term or provision of any of the Contract Documents, or the application thereof to any party or circumstance shall, to any extent, be determined to be invalid or unenforceable, the remaining provisions of the Contract Documents, or the application of such term or provision to parties or circumstances other

than those as to which it is held invalid or unenforceable, shall not be affected thereby, and each term and provision of each of the Contract Documents shall be valid and shall be enforced to the fullest extent permitted by law.

SC-3.03 Insert new Paragraph 3.03(B)(1)(c) after Paragraph 3.03(B)(1)(b) as follows:

c. In the event of conflicts, inconsistencies or discrepancies among the Contract Documents or within any of the Contract Documents, to the extent applicable, the better quality or greater quantity of work shall be provided without change in the Contract Price. In the event of such conflicts, inconsistencies or discrepancies which do not relate to the quality or quantity of work, the Contractor shall request instructions or interpretations from the Engineer as provided in the Contract Documents, and shall be governed by the Engineer's directions.

SC-3.04 Add the following sentence at the end of Paragraph 3.04(A):

Contract Price and Contract Times (or Milestones) may only be changed by a Change Order or a Written Amendment.

ARTICLE 4 - AVAILABILITY OF LANDS; SUBSURFACE AND PHYSICAL CONDITIONS; HAZARDOUS ENVIRONMENTAL CONDITIONS; REFERENCE POINTS

SC-4.01 Delete Paragraph 4.01(B) in its entirety.

SC-4.02 In the first sentence of Paragraph 4.02(A) replace the term "Supplementary Conditions" with "Contract Documents."

SC-4.03 Delete Paragraph 4.03(A) and substitute the following:

A. Statutory Provisions Governs. Changes in the Work arising out of differing subsurface or latent physical conditions shall be governed by Massachusetts General Laws, Chapter 30, §39N.

4.03(C)(1)(a) Delete Paragraph 4.03(C)(1)(a) in its entirety.

4.03(C)(2)(c) Delete Paragraph 4.03(C)(2)(c) and substitute the following:

c. Contractor failed to give timely written notice as required by MGL C. 30, §39N.

SC-4.04 Add the following sentence at the end of Paragraph 4.04(B)(2):

However, Owner, Engineer and Engineer's Consultants shall not be liable to Contractor for any claims, losses, or damages (including but not limited to all fees and changes of engineers, architects, attorneys, and other professionals and all court or arbitration or other dispute resolution costs) sustained by Contractor or in connection with any other project or anticipated projects.

SC-4.06 In the first sentence of Paragraph 4.06(A), replace the term "Supplementary Conditions" with "Contract Documents".

SC4.06(B) Delete the second sentence of Paragraph 4.06(B) in its entirety.

SC4.06(G) Delete Paragraph 4.06(G) in its entirety.

ARTICLE 5 - BONDS AND INSURANCE

SC-5.01(C) **In the sixth line of Paragraph 5.01(C), change "20 days" to "5 days".**

SC-5.02 **Delete the first sentence of Paragraph 5.02 and substitute the following:**

All Bonds and insurance required of the Contractor by the Contract Documents shall be obtained from surety or insurance companies qualified to do business under the laws of the Commonwealth of Massachusetts and acceptable to the Owner. The premiums for all Bonds are to be included in the Contract Price and paid by the Contractor. All Bonds shall be executed in the required number of counterparts and shall be submitted to the Owner for insertion into the Contract Documents prior to the execution of the Agreement. The security required by Section 29 of Chapter 149 of the General Laws shall be provided exclusively by the Bonds referred to in this Paragraph 5.02 and not by any money retained by the Owner under other provisions of the Contract Documents, such retention being solely for the benefit of the Owner.

SC-5.04 **In the second line of Paragraph 5.04(A) replace "is appropriate for the Work being performed" with "required by Paragraph 5.04(A)(7)".**

SC5.04(A)(7) **Insert new Paragraph 5.04(A)(7) as follows:**

7. claims arising out of operation of Laws or Regulations for damages because of bodily injury or death of any person or for damage to property;

5.04(B)(1) **Delete Paragraph 5.04(B)(1) in its entirety.**

SC-5.04(C) **Add the following new Paragraph 5.04(C) after Paragraph 5.04(B):**

C. The insurance coverages to be maintained by the Contractor under this Paragraph shall include the following:

1 Workers' compensation insurance with statutory limits in accordance with applicable state laws. (including employer's liability insurance with a minimum limit per accident or disease not less than $1,000,000). The attention of the Contractor and all Subcontractors is drawn to M.G.L., Chapter 149 §34A concerning insurance requirements.

2 Commercial general liability insurance, including so-called comprehensive broad form endorsement, with limits, alone or in combination with "umbrella" excess liability insurance, not less than $1,000,000 per occurrence and aggregate for personal or bodily injury and $1,000,000 per occurrence and aggregate for property damage. A combined single limit per occurrence of $3,000,000 is acceptable. The commercial general liability insurance shall include, but not necessarily be limited to, coverage for:

(a) Premises - operations and completed operations liability (this coverage to be maintained for no less than two (2) years after final acceptance of the Project by Owner).

(b) Independent contractors, covering operations of any and all Subcontractors.

(c) Blanket contractual liability covering all liabilities assumed under the Contract Documents, including without limitation the Contractor's obligations to the Owner and the Engineer and their agents and employees as provided in Paragraph 6.20 of the Conditions of the Contract.

(d) Coverage for explosion, collapse, undermining and damage to underground utilities and property.

(e) Personal and advertising injury liability ($1,000,000 limit).

(f) Broad form coverage for damage to property of the Owner, as well as third parties, while in the care, custody or control of the Contractor.

3 Comprehensive automobile liability insurance with limits of not less than $1,000,000 for any person and $1,000,000 for any one accident for bodily injury including death and $1,000,000 for property damage covering:

(a) All owned vehicles.

(b) Hired cars and trucks.

(c) All other non-owned vehicles.

(d) Loading and unloading of any motor vehicle.

The Owner, Engineer and Engineer's subconsultants, such other parties as may be designated by the Owner shall be named as additional insured's in the policies of insurance and so identified on insurance binders or certificates evidencing insurance. Contractor shall deliver such insurance binders or certificates evidencing insurance (and such other evidence of insurance requested by Owner or any other additional insured) to Owner, with copies to each additional insured. All such policies shall contain provisions or endorsements necessary to assure coverage of claims by one insured against another. All required insurance policies are to be endorsed to state that the Contractor's policies shall be primary to all other insurance available to the Owner and other specified additional insureds for liability arising out of or resulting from the Contractor's operations under the Contract, whether such operations are by Contractor, Subcontractor , anyone directly or indirectly employed by any of them, or anyone for whose acts any of them may be liable. The Owner is to be furnished originals or certified copies of the policy or policies including all endorsements required to provide stated coverage prior to execution of the Contract by the Contractor. The purchase of insurance to satisfy the above requirements, or the furnishing of insurance binders or certificates evidencing insurance, shall not be a satisfaction of Contractor's liability under this Contract or in any way modify Contractor's indemnification of the Owner.

S- 5.05 - 5.08 Delete Paragraphs 5.05 through 5.08 in their entirety and substitute the following Paragraph 5.05:

5.05 Property Insurance

Property insurance to the full insurable value of the Work will not be provided by the Owner in the form of 100% Builder's Risk, "all risk" or open peril or special causes of loss policy. Contractor shall obtain an installation floater in the full contract amount.

SC-5.09 Revise Paragraph 5.09 to read as follows:

A. If Owner has any objection to the coverage afforded by or other provisions of the Bonds or insurance required to be purchased and maintained by the Contractor in accordance with Article 5 on the basis of nonconformance with the Contract Documents, the objecting party shall so notify the other party in writing within 10 days after receipt of the certificates (or other evidence requested) required by paragraph 2.05.C. Contractor shall provide Owner such additional information in respect of insurance provided as the Owner may reasonably request. If the Contractor does not purchase or maintain all of the Bonds and insurance required of such party by the Contract Documents, the Contractor shall notify the Owner in writing of such failure to purchase prior to the start of the Work, or of such failure to

maintain prior to any change in the required coverage. Without prejudice to any other right or remedy, the Owner may elect to obtain equivalent Bonds or insurance to protect it's interests at the expense of the Contractor and a Change Order shall be issued to adjust the Contract Price accordingly.

ARTICLE 6 – CONTRACTOR'S RESPONSIBILITIES

SC-6.01(B) Revise Paragraph 6.01(B) to read as follows:

At all times during the progress of the Work, Contractor shall assign a competent resident superintendent thereto who shall not be replaced except under extraordinary circumstances and upon prior written notice to the Owner. The superintendent will be Contractor's representative at the Site and shall have authority to act on behalf of Contractor. All communications given to or received from the superintendent shall be binding on Contractor.

SC6.01(B) Add the following at the end of Paragraph 6.01(B):

The Contractor's superintendent shall be satisfactory to the Engineer and the Owner and shall be replaced by the Contractor upon reasonable request by the Engineer or the Owner. The Contractor's superintendent shall keep a daily log of the progress of the Work and make this accessible to the Owner at all times; a copy shall be submitted to the Owner for its records upon completion of the Work. The Contractor shall furnish to both the Owner and Engineer the names, addresses and telephone numbers of his job superintendent, the job superintendents of all subcontractors and at least two other authorized representatives indicating where they may be contacted at times other than normal working hours in case of emergency. The Contractor's superintendent shall remain in attendance at the site, and, except for illness or other reason excusable to the Owner, shall be present at all times when Work of any kind is being done, including Work done during overtime. If absent for illness or other reason excusable to Owner, a replacement shall be named for the period of absence, such replacement having full authority and responsibility of the full-time superintendent. Upon written request by the Owner, the Contractor shall replace its Superintendent with an individual satisfactory to the Owner.

SC-6.02 Add the following to the end of Paragraph 6.02(A):

Whenever the engineer notifies the Contractor in writing that, in his opinion, any worker on the job employed by the Contractor, or any of his Subcontractors is incompetent, unfaithful, or otherwise unsatisfactory, such workers shall be discharged from the Contract Work and shall not be employed on it except with the written consent of the Engineer.

SC6.02(B) In Paragraph 6.02(B),. delete the remainder of the first sentence after the phrase "during regular working hours," and add to following at the end thereof:

Regular working hours shall be considered to be 7:00 a.m. through 6:00 p.m., Monday through Friday. Any work performed after regular working hours, on Saturdays or Sundays, or on state and federal holidays, shall be allowed only with express written permission of Owner. Requests to work at these times must be made in writing and received by the Engineer at least three (3) days prior to date work is to begin. Not allowing work outside of regular working hours as defined herein shall not be a basis for claims against the Owner. The attention of the Contractor and all Subcontractors is drawn to M.G.L., Chapter 149 §30 and 34 concerning duration of workday.

SC6.02(B) Add the following new Paragraph 6.02(C) at the end of Paragraph 6.02(B):

C. The Contractor shall furnish labor that can work in harmony with all other elements of labor employed or to be employed in the Work. The requirements and provisions of all applicable Laws and Regulations concerning the employment of labor (including without limitation Massachusetts General Laws, Chapter 149, §§ 26-27 and §29), and minimum wage

rates established in accordance with law shall be a part of and are hereby incorporated by reference in these Conditions. Copies of the minimum wage rates are included in the Contract Documents. If it becomes necessary to employ any person in a trade or occupation not classified in the minimum wage rates included in the Contract Documents, the Contractor shall notify the Owner of his intention to employ persons in such unclassified trade or occupation in sufficient time for the Owner to obtain approved minimum wage rates for such trade or occupation. Such person shall be paid at not less than such rates as shall be determined by the Department of Labor and Industries or other proper officials in accordance with law, and such approved minimum wage rates shall be retroactive to the time of the initial employment of such person in such trade or occupation. The wage rates included in the Contract Documents are minimum rates only, and the Owner will not consider any claim for an increase in the Contract Price made by the Contractor because of payment by the Contractor of any wage rate in excess of the applicable rate contained in the Contract Documents or any increase in applicable rates. Such schedule of wage rates shall continue to be the minimum rates to be paid during the life of this Contract, and a legible copy of such schedule shall be kept posted in a conspicuous place at the site of the Work.

SC-6.03 Amend Paragraph 6.03(A) to read as follows:

Contractor shall furnish and assume full responsibility for all services, materials, equipment, labor, transportation, construction equipment and machinery, tools, appliances, fuel, power, light, heat, telephone, water, sanitary facilities, temporary facilities and all other facilities and incidentals necessary for the furnishing, performance, execution, testing, start-up and completion of the Work.

SC-6.05 Delete the first paragraph under Paragraph 6.05(A) in its entirety and substitute the following:

Reference in the Specifications or Drawings to any product, material, equipment, method or process by proprietary name, manufacturer, vendor, supplier, make or catalogue number shall be interpreted as establishing a standard of quality and function. An item will be considered an "or equal" item if (1) it is at least equal in quality, durability, appearance, strength and design to the item so named or described in the Specifications; (2) it will perform at least equally the function imposed by the general design for the Work; and (3) it conforms substantially, even with deviations, to the detailed requirements for the item named or described in the Specifications (See M.G.L. Chapter 30, Section 39M (b)). The Engineer shall be the sole judge of whether any proposed substitute product, material, equipment, process or method is an "or equal" item according to this standard, and the Engineer's decision shall be final and binding on the Contractor and any Subcontractor. After the Contract has been executed, the Owner and the Engineer will consider formal requests for the substitution of products in place of those specified only under the conditions set forth in the Specifications and these Conditions. Any additional cost, or any loss or damage arising from the substitution of any material or any method for those originally specified shall be borne by the Contractor, including, without limitation, the costs of modifying documents , additional fees of the Owner's consultants or engineers, and the costs of data provided by Contractor in support of any proposed "or equal" or substitute item, notwithstanding approval or acceptance of such substitution by the Owner or the Engineer, unless such substitution was made at the written request or direction of the Owner or the Engineer.

SC6.05(A)(1) Delete Paragraphs 6.05(A)(1) its entirety.

SC6.05(A)(2) In the fourth line of Paragraph 6.05(A)(2)(a), change "Paragraph 6.05(A)(1)" to "Paragraph 6.05(A)".

SC-6.06 Add the following at the end of Paragraph 6.06(A):

The Contractor shall submit within ten (10) days following receipt of Notice of Award, a list of all suppliers and Subcontractors, with a description of the equipment or work they will provide.

SC6.06(F) Delete Paragraph 6.06(F) in its entirety.

SC6.06(G) Delete the second and third sentences of Paragraph 6.06(G) in their entirety.

SC-6.07 Add the following at the end of Paragraph 6.07(A):

At the Owner's option, Contractor shall defend all such claims in connection with any alleged infringement of such rights.

SC-6.08 Amend Paragraph 6.08 to read as follows:

The Contractor shall be responsible for obtaining all required permits and approvals relating to the construction of the project except as noted otherwise in the Contract Documents.

SC-6.09 Amend Paragraph 6.09(B) to read as follows:

If Contractor observes that the Specifications or Drawings are at variance with any Laws or Regulations, Contractor shall give Engineer prompt written notice thereof, and any necessary changes will be authorized by one of the methods set forth in Paragraph 3.04. If Contractor performs any Work knowing or having reason to know that it is contrary to Laws or Regulations, Contractor shall bear all claims, costs, losses, and damages (including but not limited to all fees and charges of engineers, architects, attorneys, and other professionals and all court or arbitration or other dispute resolution costs) arising out of or relating to such Work.

SC-6.09(C) Delete Paragraph in its entirety

SC-6.10 Delete Paragraph 6.10 and substitute the following:

A Section 6(f) of Chapter 64H of the Massachusetts General Laws exempts from Massachusetts sales tax building materials and supplies to be used in the Project, and bidders shall not include in their bids any amount therefor. The words "building materials and supplies" shall include all materials and supplies consumed, employed or expended in the construction, reconstruction, alteration, remodeling or repair of any building, structure, public highway, bridge, or other such public work, as well as such materials and supplies physically incorporated therein. Said words shall also include rental charges for construction vehicles, equipment and machinery rented specifically for use on the Project site, or while being used exclusively for the transportation of materials for the Project. The number of the certificate granted by the Commissioner of Revenue for use in obtaining the exemption will be furnished to the Contractor upon request. The Contractor will not be paid for any sales taxes paid by the Contractor for which such exemption is or would have been applicable. The Contractor shall pay all sales, consumer, use and other similar taxes assessed upon the Work or portions thereof provided by the Contractor, or otherwise attributable to the Project, which are legally enacted at the time bids are received, whether or not yet effective, to which such exemption is not applicable.

SC-6.11 In Paragraph 6.11(A)(2), change "negotiation" to "agreement".

SC-6.12 Add new paragraph 6.12(B) as follows:

The attention of the Contractor and all Subcontractors is drawn to M.G.L., Chapter 30 §39R concerning retainment of records.

SC-6.13 Add the following at the end of Paragraph 6.13(B):

The Contractor shall have on the job and comply with the recommendations of the most recent edition of Industrial Bulletin No. 12, "Rules and Regulations for the Prevention of Accidents in Construction Operations" of the Commonwealth of Massachusetts Department of Labor and Industries, and the "Manual of Accident Prevention in Construction" of the Association of General Contractors. In the event the Contractor discovers any active utility line not disclosed in any plan or survey, he shall cease all Work in the immediate area which may affect such line, and shall promptly notify the Owner, the Engineer, and the affected utility company. The Contractor shall not restart Work without notice from and approval of the Engineer. The Owner places special emphasis on the protection of persons and existing structures, and there shall be no compromise as to the degree of protection required. The attention of the Contractor and all Subcontractors is drawn to M.G.L., Chapter 149§44F(1)(a) regarding weather protection of property.

SC-6.14 Add the following at the end of Paragraph 6.14:

This person shall be Contractor's superintendent unless otherwise designated in writing by Contractor to Owner.

SC-6.17 Add the following at the end of the first sentence of Paragraph 6.17(A):

, or for other appropriate action if so indicated in the Supplementary Conditions.

SC6.17(A)(1)(a) Replace the term "General Requirements" with "Section 013000 of the Contract Documents".

SC6.17(D)(3) Add to the end of the final sentence of Paragraph 6.17(D)(3) "or for errors or omissions in the Shop Drawings."

SC6.19(C)(7) Add a new Paragraph immediately following Paragraph 6.19 (C)(7) as follows:

8. Any acceptance by Owner or any failure to do so.

SC6.19(C)(8) Add a new Paragraph immediately following Paragraph 6.19(C)(8) as follows:

C. The Contractor guarantees that the work and services to be performed under the Contract, and all workmanship, materials and equipment performed, furnished, used or installed in the construction of the same shall be free from defects and flaws, and shall be performed and furnished in strict accordance with the Drawings, Specifications, and other Contract Documents, that the strength of all parts of all manufactured equipment shall be adequate and as specified and that the performance test requirements of the Contract shall be fulfilled. This guarantee shall be for a period of one year from and after the date of completion and acceptance of the work as issued by the Engineer. If part of the work is accepted in accordance with the Contract Documents, the guarantee for that part of the work shall be for a period of one year from the date fixed for such acceptance by the Engineer.

If at any time within the said period of guarantee any part of the work requires repairing, correction or replacement, the Owner may notify the Contractor in writing to make the required repairs, correction or replacements. If the Contractor neglects to commence making such repairs, corrections or replacements to the satisfaction of the Owner within ten (10) days from the date of receipt of such notice, or having commenced fails to prosecute such work to the Owner's satisfaction, the Owner may employ other persons to make said repairs, correction or replacements, including compensation for additional professional services, shall be paid by the Contractor.

SC-6.20 **Insert the following in the second line of Paragraph 6.20(A) after the word "indemnify":**

", defend with counsel designated by the insurer accepting liability for the claim or damage or, in lieu thereof, counsel acceptable to the Owner".

SC-6.20(A) **Add a new Paragraph immediately after paragraph 6.20(A) as follows:**

Without limiting the generality of the preceding paragraph, the Contractor hereby specifically agrees to indemnify, defend, and hold harmless the Owner from all such claims, losses or expenses which arise out of work-related injuries of employees of the Contractor or any of its Subcontractors or suppliers of any tier. It is the Owner intention that all financial risk of jobsite injuries be borne by the Contractor, and that the Owner have no financial responsibility, direct or indirect, for any such claims.

SC-6.20(C)(2) **Add the following at the end of Paragraph 6.20(C)(2)**

", provided however, that if the claim, cost, loss or damage referred to in this Paragraph 6.20 results from failure of the Engineer to discover a condition or object which is underground or otherwise not reasonably observable by the Engineer, and if said failure to discover either was or should have been apparent to the Contractor in that the said condition or object is omitted from the Engineer's maps, drawings, opinions, reports, surveys, change orders, designs or specifications, then the Contractor shall be liable for indemnification of the Engineer and Owner under Paragraph 6.20 for claims, costs, losses and damages resulting from said failure to discover unless Contractor shall have notified Engineer of the existence and location of such condition or object prior to the occurrence of such claims, costs, losses and damages and in sufficient time for Engineer to have made provisions therefor."

ARTICLE 7 - OTHER WORK

SC-7.02 **Add a new Paragraph immediately after Paragraph 7.02 as follows:**

Owner shall perform other work related to the Project at the site by his own forces or let other direct contracts to have said work performed concurrently with Work under this Contract.

ARTICLE 8 - OWNER'S RESPONSIBILITIES

SC-8.02 **Revise Paragraph 8.02(A) as follows:**

In case of termination of the employment of Engineer, Owner shall appoint a new engineer whose status under the Contract Documents shall be that of the former Engineer.

SC-8.06 **Delete Paragraph 8.06**.

ARTICLE 9 - ENGINEER'S STATUS DURING CONSTRUCTION

SC-9.03 In Paragraph 9.03(A) insert "and duties" after "responsibilities".

SC-9.03(A) Add two new Paragraphs immediately after Paragraph 9.03(A) as follows:

A. The Resident Project Representative (RPR) will be Engineer's employee or agent at the Site, will act as directed by and under the supervision of Engineer, and will confer with Engineer regarding RPR's actions. RPR's dealings in matters pertaining to the Work in general shall be with Engineer and Contractor. RPR's dealings with Subcontractors shall be through or with the full knowledge and approval of Contractor. The RPR shall:

1. Schedules: Review the progress schedule, schedule of Shop Drawing and Sample submittals, and schedule of values prepared by Contractor and consult with Engineer concerning acceptability.

2. Conferences and Meetings: Attend meetings with Contractor, such as preconstruction conferences, progress meetings, job conferences and other project-related meetings, and prepare and circulate copies of minutes thereof.

3. Liaison:

    a. Serve as Engineer's liaison with Contractor, working principally through Contractor's authorized representative, assist in providing information regarding the intent of the Contract Documents.

    b. Assist Engineer in serving as Owner's liaison with Contractor when Contractor's operations affect Owner's on-Site operations.

    c. Assist in obtaining from Owner additional details or information, when required for proper execution of the Work.

4. Interpretation of Contract Documents: Report to Engineer when clarifications and interpretations of the Contract Documents are needed and transmit to Contractor clarifications and interpretations as issued by Engineer.

5. Shop Drawings and Samples:

    a. Record date of receipt of Samples and approved Shop Drawings.

    b. Receive Samples which are furnished at the Site by Contractor, and notify Engineer of availability of Samples for examination.

6. Modifications:

    a. Consider and evaluate Contractor's suggestions for modifications in Drawings or Specifications and report such suggestions, together with RPR's recommendations, to Engineer.

    b. Transmit to Contractor in writing, decisions as issued by Engineer.

7. Review of Work and Rejection of Defective Work:

    a. Conduct on-Site observations of Contractor's work in progress to assist Engineer in determining if the Work is in general proceeding in accordance with the Contract Documents.

b. Report to Engineer whenever RPR believes that any part of Contractor's work in progress will not produce a completed Project that conforms generally to the Contract Documents or will imperil the integrity of the design concept of the completed Project as a functioning whole as indicated in the Contract Documents, or has been damaged, or does not meet the requirements of any inspection, test or approval required to be made; and advise Engineer of that part of work in progress that RPR believes should be corrected or rejected or should be uncovered for observation, or requires special testing, inspection or approval.

8. Inspections, Tests, and System Startups:

   a. Verify that tests, equipment, and systems start-ups and operating and maintenance training are conducted in the presence of appropriate Owner's personnel, and that Contractor maintains adequate records thereof.

   b. Observe, record, and report to Engineer appropriate details relative to the test procedures and systems start-ups.

9. Records:

   a. Record names, addresses, fax numbers, e-mail addresses, web site locations, and telephone numbers of all Contractors, Subcontractors, and major Suppliers of materials and equipment.

   b. Maintain records for use in preparing Project documentation.

10. Reports:

    a. Furnish to Engineer periodic reports as required of progress of the Work and of Contractor's compliance with the progress schedule and schedule of Shop Drawing and Sample submittals.

    b. Draft and recommend to Engineer proposed Change Orders, Work Change Directives, and Field Orders. Obtain backup material from Contractor.

    c. Immediately notify Engineer of the occurrence of any Site accidents, emergencies, acts of God endangering the Work, damage to property by fire or other causes, or the discovery of any Hazardous Environmental Condition or conditions that may impede the compliant operation of existing facilities on Site.

11. Payment Requests: Review Applications for Payment with Contractor for compliance with the established procedure for their submission and forward with recommendations to Engineer, noting particularly the relationship of the payment requested to the schedule of values, Work completed, and materials and equipment delivered at the Site but not incorporated in the Work.

12. Certificates, Operation and Maintenance Manuals: During the course of the Work, verify that materials and equipment certificates, operation and maintenance manuals and other data required by the Specifications to be assembled and furnished by Contractor are applicable to the items actually installed and in accordance with the Contract Documents, and have these documents delivered to Engineer for review and forwarding to Owner prior to payment for that part of the Work.

13. Completion:

a. Participate in a Substantial Completion inspection, assist in the determination of Substantial Completion and the preparation of lists of items to be completed or corrected.

b. Participate in a final inspection in the company of Engineer, Owner, and Contractor and prepare a final list of items to be completed and deficiencies to be remedied.

c. Observe whether all items on the final list have been completed or corrected and make recommendations to Engineer concerning acceptance and issuance of the Notice of Acceptability of the Work.

C. The RPR shall not:

1. Authorize any deviation from the Contract Documents or substitution of materials or equipment (including "or-equal" items).

2. Exceed limitations of Engineer's authority as set forth in the Contract Documents.

3. Undertake any of the responsibilities of Contractor, Subcontractors, Suppliers, or Contractor's superintendent.

4. Advise on, issue directions relative to, or assume control over any aspect of the means, methods, techniques, sequences or procedures of Contractor's work unless such advice or directions are specifically required by the Contract Documents.

5. Advise on, issue directions regarding, or assume control over safety practices, precautions, and programs in connection with the activities or operations of Owner or Contractor.

6. Participate in specialized field or laboratory tests or inspections conducted off-site by others except as specifically authorized by Engineer.

7. Accept Shop Drawing or Sample submittals from anyone other than Contractor.

8. Authorize Owner to occupy the Project in whole or in part or determine operational protocol that may affect the compliant operation of existing facilities.

SC-9.08 Add the following new Paragraph 9.08(E) as follows:

Pursuant to Massachusetts General Laws, Chapter 30, §39P, the Engineer will render decisions on interpretation of the Specifications, approval of equipment, material or any other approval, or progress of the Work promptly and, in any event, no later than thirty (30) days after the written submission for decision; but if such decision requires extended investigation and study, the Engineer shall, within thirty (30) days after the receipt of the submission, give the party making the submission written notice of the reasons why the decision cannot be made within the thirty-day period and the date by which the decision will be made. Either party to the Contract may make written submission to the Engineer for such decisions.

ARTICLE 10 - CHANGES IN THE WORK; CLAIMS

SC-10.02 Add the following new paragraph 10.02(B) as follows:

B. The attention of the Contractor and all Subcontractors is drawn to M.G.L., Chapter 30 §391 concerning deviations from plans and specifications.

SC-10.05 Revise Paragraph 10.05(B) as follows:

B. Notice: The Contractor shall deliver written notice stating the general nature of each Claim, dispute, or other matter to Engineer and the Owner to the Contract promptly (but in no event later than 14 days) after the start of the event giving rise thereto. Contractor's failure to comply with this notice requirement shall constitute a waiver of the Claim. Notice of the amount or extent of the Claim, dispute, or other matter with supporting data shall be delivered to the Engineer and the Owner to the Contract within 30 days after the start of such event (unless Engineer allows additional time for claimant to submit additional or more accurate data in support of such Claim, dispute, or other matter). A Claim for an adjustment in Contract Price shall be prepared in accordance with the provisions of paragraph 12.01.B. A Claim for an adjustment in Contract Time shall be prepared in accordance with the provisions of paragraph 12.02.B. Each Claim shall be accompanied by Contractor's written statement that the adjustment claimed is the entire adjustment to which the Contractor believes it is entitled as a result of said event.

ARTICLE 11 - COST OF THE WORK

SC-11.03 Delete Subparagraphs 11.0.3(D)(1), (2) and (3), and substitute the following:

11.0.3(D) When the accepted quantity of any item of Unit Price Work performed by the Contractor differs from the estimated quantity of such item in the Contractor's bid schedule, payment shall be made at the original Contract Unit Price for the accepted quantity of work done. No adjustment or allowance will be made for any increased expenses, loss of expected reimbursement or loss of anticipated profits suffered or claimed by the Contractor resulting either directly or indirectly from such increased or decreased quantities, or from unbalanced allocation among the Contract items of overhead expense on the part of the bidder and subsequent loss of expected reimbursements therefor, or from any other cause.

ARTICLE 12 - CHANGE OF CONTRACT PRICE; CHANGE OF CONTRACT TIMES

SC-12.01 **In Paragraph 12.01(C)(2)(a) change "15" to "10".**

SC-12.01(C)(2)(c) **In Paragraph 12.01(C)(2)(c) change "15" to "10"**

SC-12.01(C)(2)(e) **In Paragraph 12.01(C)(2)(e) change "five" to "ten".**

SC12.02-03 **Delete Paragraphs 12.02 through 12.03 and substitute the following:**

12.02 Change of Contract Times. If the Contractor is delayed in the commencement, prosecution or completion of the Work by any act or omission of the Owner or the Engineer, or an employee of either, or a separate contractor employed by the Owner (except when the contract with such separate contractor has been assigned to the Contractor or due to specific contractors and project activity identified in the Contract Documents are not allowed as described in the Contract Documents), or by changes in the Work duly ordered by the Owner, or by strikes, acts of war or terrorism, unusually severe weather not anticipatable and preventing any continuation of operations by the Contractor, unavoidable casualties, or such other unforeseeable causes as are beyond the control of the Contractor and are not caused in whole or in part by any fault or negligence of the Contractor (other than delays occasioned by financial difficulties of the Contractor), then, except as provided in Paragraph 12.04 in the case of certain delays caused by the Owner, the Contractor's sole remedy shall be that the Contract Time (or Milestone) shall be extended by Change Order for such reasonable period of time, if any, as the Engineer may determine is required due to the nature of the delay, all subject to the provisions of this Article 12, and the Contractor shall not be entitled to claim damages or any increase in the Contract Price on account of such delay. The procedures set forth in, and all other provisions contained in, this Article 12 are in addition to the provisions of the Contract Documents relating to procedures for Change Orders.

12.03 Notice. The Contractor shall notify the Engineer as soon as possible of any cause that may delay the Work. The Contractor shall give written notice to the Engineer within ten (10) days after the time that he knows or should know of any cause which will result (or has resulted) in delay for which he claims or intends to claim an extension of the Contract Time (or Milestone) (including those causes which the Owner or the Engineer is responsible for or has knowledge of). Any such written notice shall (1) state that an extension is claimed; (2) identify the cause of delay; and (3) describe as fully as practicable at the time the nature and expected duration of the delay and its effect on the various portions of the Work. The submission of such written notice within the time period provided above shall be a condition precedent to any extension of the Contract Time (or Milestone). Failure to submit such written notice shall constitute a waiver of such extension of the Contract Time (or milestone).

12.04 Statutory Provisions. The following clauses (a) and (b) of this Paragraph 12.3 are included herein pursuant to requirements of Massachusetts General Laws, Chapter 30, §39O. In the event that suspension, delay, interruption or failure to act of the Owner increases the cost of performance to any Subcontractor, the Subcontractor shall have the same rights against the Contractor for payment for an increase in the cost of his performance as provisions (a) and (b) give the Contractor against the Owner, but nothing in provisions (a) and (b) shall in any way change, modify or alter any other rights which the Contractor or the Subcontractor may have against each other.

(a) The Owner may order the Contractor in writing to suspend, delay, or interrupt all or any part of the Work for such period of time as it may determine to be appropriate for the convenience of the Owner; provided, however, that if there is a suspension, delay or interruption for fifteen days or more or due to a failure of the Owner to act within the

time specified in this Contract, the Owner shall make an adjustment in the Contract Price for any increase in the cost of performance of this Contract but shall not include any profit to the Contractor on such increase; and provided further, that the Owner shall not make any adjustment in the Contract Price under this provision for any suspension, delay, interruption or failure to act to the extent that such is due to any cause for which this Contract provides for an equitable adjustment of the Contract Price under any other contract provisions.

(b) The Contractor must submit the amount of a claim under provision (a) to the Owner in writing as soon as practicable after the end of the suspension, delay, interruption or failure to act and, in any event, not later than the date of final payment under this Contract and, except for costs due to a suspension order, the Owner shall not approve any costs in the claim incurred more than twenty (20) days before the Contractor notified the Owner in writing of the act or failure to act involved in the claim.

ARTICLE 13 - TESTS AND INSPECTIONS; CORRECTION, ETC.

SC-13.01 Delete Paragraph 13.01 and substitute the following:

13.01 Defective Work. Contractor warrants and guarantees to Owner and Engineer that all Work will be in accordance with the Contract Documents and will not be defective. Prompt notice of all defective work of which Owner or Engineer has actual knowledge shall be given to Contractor. All defective work may be rejected, corrected or accepted as provided in this Article 13. The Contractor shall obtain and preserve for the benefit of the Owner manufacturer's warranties on materials incorporated into the Work, and the Contractor shall prepare and execute a written guarantee and warranty applicable to all phases of the Work in accordance with the provisions of this Paragraph 13.01 and all other applicable provisions of the Contract Documents pertaining to warranties and guarantees, and shall also secure and pass through to the Owner written guarantees and warranties prepared in a similar manner from each Subcontractor engaged in the performance of the Work and, prior to Substantial Completion, shall deliver two (2) sets of all such guarantees and warranties to the Engineer for review. All materials, equipment and supplies requiring replacement during any guarantee period specified in the Contract Documents shall be subject to a supplementary guarantee and warranty extending the guarantee period to cover all such items for the full guarantee period specified, beginning as of the date of acceptance of each such replacement item or element of work. The warranty and guarantee provisions of this Paragraph 13.01 shall be in addition to and not in limitation of any other warranties, guarantees or remedies allowed by law or the Contract Documents.

SC-13.02 Add the following after Paragraph 13.02:

13.02(B) Inspection by State and Federal Officials. Representatives of the State and Federal Government shall have access to the Work wherever it is in preparation or progress. The Contractor shall provide facilities for access and inspection.

SC-13.03(A) Add the following at the end of Paragraph 13.03(A):

Contractor shall furnish written information to Engineer stating the original sources of supply of all materials procured or manufactured away from the actual site of the Work. In order to ensure a proper time sequence for required inspection and approval, this information shall be

furnished at least two (2) weeks (or as otherwise directed by Engineer) in advance of the incorporation in the Work of any such materials.

SC-13.03(B)(4) Add as new Subparagraph 13.03(B)(4) the following:

4. and; the costs of tests, inspections and approvals related to remedial operations performed to correct defective Work shall be borne by Contractor.

SC-13.03(C) Insert at the end of Paragraph 13.03(C) the following:

All inspections, tests or approvals other than those required by Laws and Regulations of any public body having jurisdiction shall be performed by organizations acceptable to Owner, Contractor and Engineer.

SC-13.03(E) In the first line of Paragraph 13.03(E), change "or" to "including".
SC-13.03(F) Revise Paragraph 13.03(F) to read as follows:

F. Uncovering Work as provided in paragraph 13.03E shall be at Contractor's expense.

SC-13.03(G) Insert new Paragraph 13.03(G) as follows:

G. Neither observations by Engineer nor inspections, tests or approvals by others shall relieve Contractor from Contractor's obligations to perform the work in accordance with the Contract Documents.

SC-13.07(B) At the end of Paragraph 13.07(B) add the following:

Or may be deducted from amounts otherwise due the Contractor.

At the end of Paragraph 13.07(D) add the following:

Or may be deducted from amounts otherwise due the Contractor, and the terms of this Paragraph 13.07 will continue to apply.

SC-13.09(A) Revise paragraph 13.09(A) to read as follows:

A. If Contractor fails after written notice from Engineer or Owner to correct defective Work or to remove and replace rejected Work as required by Engineer in accordance with paragraph 13.06.A, or if Contractor fails to perform the Work in accordance with the Contract Documents, or if Contractor fails to comply with any other provision of the Contract Documents, Owner may, immediately, correct and remedy any such deficiency.

ARTICLE 14 - PAYMENTS TO CONTRACTOR AND COMPLETION

SC-14.02(A)(1) Insert the following at the end of the first sentence of Paragraph 14.02(A)(1):

", or by the Owner or the Engineer, including, without limitation, evidence of payment by Contractor for all materials and equipment included in such Application for Payment."

SC-14.02(A)(4) Add the following new Paragraph 14.02(A)(4) after Paragraph 14.02(A)(3):

Payments will be made in accordance with Massachusetts General Laws, Chapter 30, §39K. The attention of the Contractor and all Subcontractors is drawn to M.G.L., Chapter 30 §39F(a)-(i) concerning Contractor's payment to Subcontractors and Owner's obligations in regard to Subcontractors' payment. The attention of the Contractor and

all Subcontractors is drawn to Massachusetts General Laws, Chapter 266, §§67A, 67B and 67C, and Chapter 93, §9B, concerning penalties for false or fraudulent claims, representations and records.

SC-14.02(B)(1) Add the following to the end of Paragraph 14.02(B)(1):

The Contractor's sole remedy for the Engineer's delay in approving a progress payment or the Owner's delay in paying the Contractor shall be the payment of interest as provided in Massachusetts General Laws, Chapter 30, §§39F.

SC14.02(B)(4)(e)Add the following to the end of Paragraph 14.02(B)(4)(e):

Except to the extent otherwise provided in the Contract Documents.

SC-14.02(C)(1) Delete Paragraph 14.02(C)(1) and replace with the following:

Fifteen (15) days after presentation of the Application for Payment to Owner with Engineer's recommendation, the amount recommended will (subject to the provisions of Paragraph 14.02(D)) become due, and when due will be paid by Owner to Contractor.

SC-14.02(D)(1)(b)In the fourth line of Paragraph 14.02(D)(1)(b), add the following:

and provides an indemnity satisfactory to Owner for all claims, costs, losses and damages arising out of the Liens,

SC-14.02(D)(3) Delete Paragraph 14.02(D)(3) in its entirety.

SC-14.05 Add Paragraph 14.05(A)(5) as follows:

3. Owner may at any time request Contractor in writing to permit Owner to take over operation of any such part of the Work although it is not substantially complete. A copy of such request will be sent to Engineer and, within a reasonable time thereafter, Owner, Contractor and Engineer shall make an inspection of that part of the Work to determine its status of completion and will prepare a list of the items remaining to be completed or corrected thereon before final payment. If Contractor does not object in writing to Owner and Engineer that such part of the Work is not ready for separate operation by Owner, Engineer will finalize the list of items to be completed or corrected and will deliver such list to Owner and Contractor together with a written recommendation as to the division of responsibilities pending final payment between Owner and Contractor with respect to security, operation, safety, maintenance, utilities, insurance, warranties and guarantees for that part of the Work which will become binding upon Owner and Contractor at the time when Owner takes over such operation (unless they shall have otherwise agreed in writing and so informed Engineer). During such operation and prior to Substantial Completion of such part of the Work, Owner shall allow Contractor reasonable access to complete or correct items on said list and to complete other related Work.

SC-14.07 In the tenth line of Paragraph 14.07(A)(1), insert the following after "documents,":

and Engineer has indicated that the Work is acceptable (subject to the provisions of Paragraph 14.09),

Revise Paragraph 14.07(C) to read as follows:

1. Payment under this paragraph shall be made in the time specified by MGL C. 30, § 39K.

SC-14.10 Add Paragraph 14.10 as follows:

14.10 Contractor's Continuing Obligation. Contractor's obligation to perform and complete the Work in accordance with the Contract Documents shall be absolute. Neither: (i)

recommendation of any progress of final payment by Engineer, (ii) the issuance of a certificate of Substantial Completion, (iii) any payment by Owner to Contractor under the Contract Documents, (iv) any use or occupancy of the Work or any part thereof by Owner, (v) any act of acceptance by Owner or any failure to do so, (vi) any review and approval of a Shop Drawing or sample submission, (vii) the issuance of a notice of acceptability by Engineer pursuant to Paragraph 14.07, nor (viii) any correction of defective Work by Owner will constitute an acceptance of Work not in accordance with the Contract Documents, or a release of Contractor's obligation to perform the Work in accordance with the Contract Documents (except as provided in Paragraph 14.09).

ARTICLE 15 - SUSPENSION OF WORK AND TERMINATION

SC-15.01 Delete Paragraph 15.01(A) in its entirety and substitute the following:

Owner may, at any time and without cause order the Contractor in writing to suspend, delay, or interrupt all or any part of the work for such period of time as it may determine to be appropriate for the convenience of the Owner; provided, however, that if there is a suspension, delay or interruption for fifteen days or more or due to a failure of the Owner to act within the time specified in this Contract, the Owner shall make an adjustment in the contract price for any increase in the cost of performance of this Contract but shall not include any profit to the general contractor on such increase; and provided further, that the Owner shall not make any adjustment in the contract price under this provision for any suspension, delay, interruption or failure to act to the extent that such is due to any cause for which this Contract provides for an equitable adjustment of the contract price under any other Contract provision.

SC-15.02 In Paragraph 15.02(A)(1) line one, delete the word "persistent".

SC-15.02(A)(4) Insert the following after Subparagraph 15.02(A)(4) as Subparagraphs 15.02(A)(5) through 15.02(A)(9):

5. if Contractor commences a voluntary case under any chapter of the Bankruptcy Code (Title 11, United States Code), as now or hereafter in effect, or if Contractor takes any equivalent or similar action by filing a petition or otherwise under any other federal or state law in effect at such time relating to the bankruptcy or insolvency; or

6. if a petition is filed against Contractor under any chapter of the Bankruptcy Code as now or hereafter in effect at the time of filing, or if a petition is filed seeking any such equivalent or similar relief against Contractor under any other federal or state law in effect at the time relating to bankruptcy or insolvency; or

7. if Contractor makes a general assignment for the benefit of creditors; or

8. if a trustee, receiver, custodian or agent of Contractor is appointed under applicable law or under contract, whose appointment or authority to take charge of property of Contractor is for the purpose of enforcing a Lien against such property or for the purpose of general administration of such property for the benefit of Contractor's creditors; or

9. if Contractor admits in writing an inability to pay its debts generally as they become due.

SC-15.03(A) In the third line of Paragraph 15.03(A), insert "abandon the Work and" after "elect to".

SC-15.03(A)(3) In the second line of Paragraph 15.03(A)(3), insert the word "reasonable" after the work "all".

SC-15.04 Delete Paragraph 15.04 in its entirety.

ARTICLE 16 - DISPUTE RESOLUTION

SC-16.01 Delete Paragraph 16.01 in its entirety and replace with the following:

16.01 All claims, disputes or other matters in controversy between the Contractor and the Owner relating to the execution and progress of the Work or the interpretation of the Contract Documents, which cannot be resolved by agreement between them, shall be referred to the Engineer in writing, with a copy to the other party, for determination. The Engineer shall afford both parties a reasonable opportunity to present evidence in support of their respective positions. The Engineer shall render his decision in writing to each of the parties within a reasonable time.

16.02 No such claim, dispute or other matter shall constitute grounds for the Contractor to delay progress of the Work, and the Contractor shall carry on the Work and maintain its progress during consideration of any such claim, dispute or other matter by the Engineer. The decision of the Engineer with respect to any and all such claims, disputes or other matters in questions shall be final and conclusive, subject to the provisions of Paragraph 16.03 below.

16.03 The decision of the Engineer on any such claim, dispute or other matter in question shall be final and binding upon the Owner and the Contractor unless the Owner or the Contractor gives written notice to the other and to the Engineer of its objection to such decision within ten (10) days after receipt by such aggrieved party of the Engineer's decision.

16.04 In the event that either party is aggrieved by the decision of the Engineer, the dispute resolution procedures set forth below shall be followed:

A. The Owner and Contractor intend to endeavor to resolve claims, disputes and other matters in question between them by negotiation and mediation which, unless the parties mutually agree otherwise, shall be in accordance with the Construction Industry Mediation Rules of the American Arbitration Association currently in effect. Request for mediation shall be filed in writing with the other party to this Contract and with the American Arbitration Association. Under no circumstances shall the Contractor have the right to stop the performance of the Work pending the resolution of a dispute between the parties.

B. The parties shall share the mediator's fee and any filing fees equally. The mediation shall be held in Boston, Massachusetts, unless another location is mutually agreed upon. Agreements reached in mediation shall be enforceable as settlement agreements in any Court having jurisdiction thereof.

C. If negotiation or mediation fail to bring about resolution, then, at the Owner's sole discretion, any claim, dispute or other matter in question arising out of or related to this Contract shall be subject to arbitration.

D. If the Owner in its sole discretion elects to arbitrate, such arbitration shall be in accordance with the Construction Industry Arbitration Rules of the American Arbitration Association currently in effect. The demand for arbitration shall be filed in writing with the other party to this Contract and with the American Arbitration Association.

E. A demand for arbitration shall be made within reasonable time after the claim, dispute or other matter in question has arisen. In no event shall the demand for arbitration be made after the date when institution of legal or equitable proceedings based on such claim, dispute or other matter in question would be barred by the applicable statute of limitations.

F. The award rendered by the arbitrator or arbitrators shall be final, and judgment may be entered upon it in accordance with the applicable law in any court having jurisdiction thereof.

G. Arbitration, under this Contract, shall be consolidated with the arbitration proceedings between other parties if such arbitration proceedings arise out of the same transaction or relate to the same subject matter. Consolidation shall be by order of the arbitrator(s) in any pending case, or if the arbitrator(s) fail to make an order, a party may apply to a court of competent jurisdiction for such order. Any arbitration proceeding shall take place in Boston, Massachusetts.

H. The Contractor will require each of its subcontractors to have a similar arbitration clause in their respective subcontract. The foregoing agreement to arbitrate and other agreements to arbitrate with an additional person or entity shall be specifically enforceable in accordance with applicable law in any court having jurisdiction thereof.

I. If the Owner in its sole discretion declines to arbitrate, such claims, disputes and other matters shall be decided by a court of the Commonwealth of Massachusetts having jurisdiction thereof. This Contract shall be governed by the laws of the Commonwealth of Massachusetts.

J. Notwithstanding any provision contained in this Article or elsewhere in the Contract Documents, the Owner reserves the following rights in connection with claims and disputes between the Owner and the Contractor:

1. The right to institute legal action against the Contractor in any Court of competent jurisdiction in lieu of demanding arbitration pursuant to this Article, in which case the dispute or disputes which are the subject of such action shall be decided by such court, and not by arbitration.

2. The right to obtain from any Court of competent jurisdiction a stay of any arbitration instituted by the Contractor, provided that the application for such stay is made before the appointment of the neutral arbitrator in such arbitration, in which case the dispute or disputes which are the subject of such arbitration shall be decided by such court, and not by arbitration.

3. The right to require the Contractor to join as a party in any arbitration between the Owner and the Engineer relating to the Project, in which case the Contractor agrees to be bound by the decision of the arbitrator or arbitrators in such arbitration.

THE COMMONWEALTH OF MASSACHUSETTS
EXECUTIVE OFFICE OF LABOR AND WORKFORCE DEVELOPMENT
DEPARTMENT OF LABOR STANDARDS

Prevailing Wage Rates

As determined by the Director under the provisions of the Massachusetts General Laws, Chapter 149, Sections 26 to 27H

DEVAL L. PATRICK
Governor

TIMOTHY P. MURRAY
Lt. Governor

JOANNE F. GOLDSTEIN
Secretary

HEATHER E. ROWE
Director

Awarding Authority: City of Quincy

Contract Number:

City/Town: QUINCY

Description of Work: Modifications and improvements to the existing storm drainage system in the vicinity of Centre Street at Burgin Parkway.

Job Location: Revere Road

Information about Prevailing Wage Schedules for Awarding Authorities and Contractors

- This wage schedule applies only to the specific project referenced at the top of this page and uniquely identified by the "Wage Request Number" on all pages of this schedule.
- Awarding authorities must request an updated wage schedule from the Department of Labor Standards ("DLS") if it has not opened bids or selected a contractor within 90 days of the date of issuance of the wage schedule.
- The wage schedule shall be incorporated in any advertisement or call for bids for the project as required by M.G.L. c. 149, § 27. Once a contractor has been selected by the awarding authority, the wage schedule shall be made a part of the contract for that project. The wage schedule must be posted in a conspicuous place at the work site during the life of the project in accordance with M.G.L. c. 149, § 27. The wages listed on the wage schedule must be paid to employees performing construction work on the project regardless of whether they are employed by the prime contractor, a filed sub-bidder, or any sub-contractor.
- All apprentices must be registered with the Massachusetts Division of Apprenticeship Training (DAT) in order to be paid at the lower apprentice rates. All apprentices must keep his/her apprentice identification card on his/her person during all work hours. If a worker is not registered with DAT, he/she must be paid the "total rate" listed on the wage schedule regardless of experience or skills.
- The wage rates will remain in effect for the duration of the project, except in the case of multi-year public construction projects. For construction projects lasting longer than one year, awarding authorities must request an updated wage schedule. Awarding authorities are required to request these updates no later than two weeks before the anniversary of the date the contract was executed by the awarding authority and the general contractor. Contractors are required to obtain the wage schedules from awarding authorities, and to pay no less than these rates to covered workers. The annual update requirement is not applicable to 27F "rental of equipment" contracts.
- Every contractor or subcontractor which performs construction work on the project is required to submit weekly payroll reports directly to the awarding authority and keep them on file for three years. Each weekly payroll report must contain: the employee's name, address, occupational classification, hours worked, and wages paid. Do not submit weekly payroll reports to DLS. A sample of a payroll reporting form may be obtained at http://www.mass.gov/dols/pw.
- Contractors with questions about the wage rates or classifications included on the wage schedule have an affirmative obligation to inquire with DLS at (617) 626-6953.
- Employees not receiving the prevailing wage rate set forth on the wage schedule may report the violation to the Fair Labor Division of the office of the Attorney General at (617) 727-3465.
- Failure of a contractor or subcontractor to pay the prevailing wage rates listed on the wage schedule to all employees who perform construction work on the project is a violation of the law and subjects the contractor or subcontractor to civil and criminal penalties.

Issue Date: 04/30/2013 **Wage Request Number:** 20130430-056

Classification	Effective Date	Base Wage	Health	Pension	Supplemental Unemployment	Total Rate
Construction						
(2 AXLE) DRIVER - EQUIPMENT *TEAMSTERS JOINT COUNCIL NO. 10 ZONE A*	12/01/2012	$31.55	$8.91	$8.00	$0.00	$48.46
(3 AXLE) DRIVER - EQUIPMENT *TEAMSTERS JOINT COUNCIL NO. 10 ZONE A*	12/01/2012	$31.62	$8.91	$8.00	$0.00	$48.53
(4 & 5 AXLE) DRIVER - EQUIPMENT *TEAMSTERS JOINT COUNCIL NO. 10 ZONE A*	12/01/2012	$31.74	$8.91	$8.00	$0.00	$48.65
ADS/SUBMERSIBLE PILOT *PILE DRIVER LOCAL 56 (ZONE 1)*	08/01/2012	$82.32	$9.80	$17.67	$0.00	$109.79
	08/01/2013	$85.47	$9.80	$17.67	$0.00	$112.94
	08/01/2014	$88.62	$9.80	$17.67	$0.00	$116.09
	08/01/2015	$91.77	$9.80	$17.67	$0.00	$119.24
AIR TRACK OPERATOR *LABORERS - ZONE 1*	12/01/2012	$33.05	$7.10	$12.45	$0.00	$52.60
	06/01/2013	$33.80	$7.10	$12.45	$0.00	$53.35
	12/01/2013	$34.55	$7.10	$12.45	$0.00	$54.10
	06/01/2014	$35.30	$7.10	$12.45	$0.00	$54.85
	12/01/2014	$36.05	$7.10	$12.45	$0.00	$55.60
	06/01/2015	$36.80	$7.10	$12.45	$0.00	$56.35
	12/01/2015	$37.55	$7.10	$12.45	$0.00	$57.10
	06/01/2016	$38.30	$7.10	$12.45	$0.00	$57.85
	12/01/2016	$39.30	$7.10	$12.45	$0.00	$58.85
For apprentice rates see "Apprentice- LABORER"						
ASBESTOS REMOVER - PIPE / MECH. EQUIPT. *HEAT & FROST INSULATORS LOCAL 6 (BOSTON)*	12/01/2012	$29.08	$10.40	$5.95	$0.00	$45.43
	06/01/2013	$29.88	$10.40	$5.95	$0.00	$46.23
	12/01/2013	$30.68	$10.40	$5.95	$0.00	$47.03
	06/01/2014	$31.58	$10.40	$5.95	$0.00	$47.93
	12/01/2014	$32.48	$10.40	$5.95	$0.00	$48.83
	06/01/2015	$33.43	$10.40	$5.95	$0.00	$49.78
	12/01/2015	$34.38	$10.40	$5.95	$0.00	$50.73
ASPHALT RAKER *LABORERS - ZONE 1*	12/01/2012	$32.55	$7.10	$12.45	$0.00	$52.10
	06/01/2013	$33.30	$7.10	$12.45	$0.00	$52.85
	12/01/2013	$34.05	$7.10	$12.45	$0.00	$53.60
	06/01/2014	$34.80	$7.10	$12.45	$0.00	$54.35
	12/01/2014	$35.55	$7.10	$12.45	$0.00	$55.10
	06/01/2015	$36.30	$7.10	$12.45	$0.00	$55.85
	12/01/2015	$37.05	$7.10	$12.45	$0.00	$56.60
	06/01/2016	$37.80	$7.10	$12.45	$0.00	$57.35
	12/01/2016	$38.80	$7.10	$12.45	$0.00	$58.35
For apprentice rates see "Apprentice- LABORER"						
ASPHALT/CONCRETE/CRUSHER PLANT-ON SITE *OPERATING ENGINEERS LOCAL 4*	12/01/2012	$40.09	$10.00	$13.02	$0.00	$63.11
	06/01/2013	$40.87	$10.00	$13.02	$0.00	$63.89
	12/01/2013	$41.65	$10.00	$13.02	$0.00	$64.67
For apprentice rates see "Apprentice- OPERATING ENGINEERS"						

Classification	Effective Date	Base Wage	Health	Pension	Supplemental Unemployment	Total Rate
BACKHOE/FRONT-END LOADER *OPERATING ENGINEERS LOCAL 4*	12/01/2012	$40.09	$10.00	$13.02	$0.00	$63.11
	06/01/2013	$40.87	$10.00	$13.02	$0.00	$63.89
	12/01/2013	$41.65	$10.00	$13.02	$0.00	$64.67
For apprentice rates see "Apprentice- OPERATING ENGINEERS"						
BARCO-TYPE JUMPING TAMPER *LABORERS - ZONE 1*	12/01/2012	$32.55	$7.10	$12.45	$0.00	$52.10
	06/01/2013	$33.30	$7.10	$12.45	$0.00	$52.85
	12/01/2013	$34.05	$7.10	$12.45	$0.00	$53.60
	06/01/2014	$34.80	$7.10	$12.45	$0.00	$54.35
	12/01/2014	$35.55	$7.10	$12.45	$0.00	$55.10
	06/01/2015	$36.30	$7.10	$12.45	$0.00	$55.85
	12/01/2015	$37.05	$7.10	$12.45	$0.00	$56.60
	06/01/2016	$37.80	$7.10	$12.45	$0.00	$57.35
	12/01/2016	$38.80	$7.10	$12.45	$0.00	$58.35
For apprentice rates see "Apprentice- LABORER"						
BLOCK PAVER, RAMMER / CURB SETTER *LABORERS - ZONE 1*	12/01/2012	$33.05	$7.10	$12.45	$0.00	$52.60
	06/01/2013	$33.80	$7.10	$12.45	$0.00	$53.35
	12/01/2013	$34.55	$7.10	$12.45	$0.00	$54.10
	06/01/2014	$35.30	$7.10	$12.45	$0.00	$54.85
	12/01/2014	$36.05	$7.10	$12.45	$0.00	$55.60
	06/01/2015	$36.80	$7.10	$12.45	$0.00	$56.35
	12/01/2015	$37.55	$7.10	$12.45	$0.00	$57.10
	06/01/2016	$38.30	$7.10	$12.45	$0.00	$57.85
	12/01/2016	$39.30	$7.10	$12.45	$0.00	$58.85
For apprentice rates see "Apprentice- LABORER"						
BOILER MAKER *BOILERMAKERS LOCAL 29*	01/01/2010	$37.70	$6.97	$11.18	$0.00	$55.85

Apprentice - *BOILERMAKER - Local 29*

Effective Date - 01/01/2010

Step	percent	Apprentice Base Wage	Health	Pension	Supplemental Unemployment	Total Rate
1	65	$24.51	$6.97	$11.18	$0.00	$42.66
2	65	$24.51	$6.97	$11.18	$0.00	$42.66
3	70	$26.39	$6.97	$11.18	$0.00	$44.54
4	75	$28.28	$6.97	$11.18	$0.00	$46.43
5	80	$30.16	$6.97	$11.18	$0.00	$48.31
6	85	$32.05	$6.97	$11.18	$0.00	$50.20
7	90	$33.93	$6.97	$11.18	$0.00	$52.08
8	95	$35.82	$6.97	$11.18	$0.00	$53.97

Notes:

Apprentice to Journeyworker Ratio:1:5

Classification	Effective Date	Base Wage	Health	Pension	Supplemental Unemployment	Total Rate
BRICK/STONE/ARTIFICIAL MASONRY (INCL. MASONRY WATERPROOFING) *BRICKLAYERS LOCAL 3 (QUINCY)*	02/01/2013	$47.41	$10.18	$17.83	$0.00	$75.42
	08/01/2013	$48.31	$10.18	$17.90	$0.00	$76.39
	02/01/2014	$48.87	$10.18	$17.90	$0.00	$76.95
	08/01/2014	$49.77	$10.18	$17.97	$0.00	$77.92
	02/01/2015	$50.33	$10.18	$17.97	$0.00	$78.48
	08/01/2015	$51.23	$10.18	$18.04	$0.00	$79.45
	02/01/2016	$51.80	$10.18	$18.04	$0.00	$80.02
	08/01/2016	$52.70	$10.18	$18.12	$0.00	$81.00
	02/01/2017	$53.27	$10.18	$18.12	$0.00	$81.57

Apprentice - *BRICK/PLASTER/CEMENT MASON - Local 3 Quincy*

Effective Date - 02/01/2013

Step	percent	Apprentice Base Wage	Health	Pension	Supplemental Unemployment	Total Rate
1	50	$23.71	$10.18	$17.83	$0.00	$51.72
2	60	$28.45	$10.18	$17.83	$0.00	$56.46
3	70	$33.19	$10.18	$17.83	$0.00	$61.20
4	80	$37.93	$10.18	$17.83	$0.00	$65.94
5	90	$42.67	$10.18	$17.83	$0.00	$70.68

Effective Date - 08/01/2013

Step	percent	Apprentice Base Wage	Health	Pension	Supplemental Unemployment	Total Rate
1	50	$24.16	$10.18	$17.90	$0.00	$52.24
2	60	$28.99	$10.18	$17.90	$0.00	$57.07
3	70	$33.82	$10.18	$17.90	$0.00	$61.90
4	80	$38.65	$10.18	$17.90	$0.00	$66.73
5	90	$43.48	$10.18	$17.90	$0.00	$71.56

Notes:

Apprentice to Journeyworker Ratio:1:5

BULLDOZER/GRADER/SCRAPER *OPERATING ENGINEERS LOCAL 4*	12/01/2012	$39.72	$10.00	$13.02	$0.00	$62.74
	06/01/2013	$40.49	$10.00	$13.02	$0.00	$63.51
	12/01/2013	$41.27	$10.00	$13.02	$0.00	$64.29

For apprentice rates see "Apprentice- OPERATING ENGINEERS"

CAISSON & UNDERPINNING BOTTOM MAN *LABORERS - FOUNDATION AND MARINE*	12/01/2012	$33.45	$7.10	$12.60	$0.00	$53.15
	06/01/2013	$34.20	$7.10	$12.60	$0.00	$53.90
	12/01/2013	$34.95	$7.10	$12.60	$0.00	$54.65
	06/01/2014	$35.70	$7.10	$12.60	$0.00	$55.40
	12/01/2014	$36.45	$7.10	$12.60	$0.00	$56.15
	06/01/2015	$37.20	$7.10	$12.60	$0.00	$56.90
	12/01/2015	$37.95	$7.10	$12.60	$0.00	$57.65
	06/01/2016	$38.70	$7.10	$12.60	$0.00	$58.40
	12/01/2016	$39.70	$7.10	$12.60	$0.00	$59.40

For apprentice rates see "Apprentice- LABORER"

Classification	Effective Date	Base Wage	Health	Pension	Supplemental Unemployment	Total Rate
CAISSON & UNDERPINNING LABORER *LABORERS - FOUNDATION AND MARINE*	12/01/2012	$32.30	$7.10	$12.60	$0.00	$52.00
	06/01/2013	$33.05	$7.10	$12.60	$0.00	$52.75
	12/01/2013	$33.80	$7.10	$12.60	$0.00	$53.50
	06/01/2014	$34.55	$7.10	$12.60	$0.00	$54.25
	12/01/2014	$35.30	$7.10	$12.60	$0.00	$55.00
	06/01/2015	$36.05	$7.10	$12.60	$0.00	$55.75
	12/01/2015	$36.80	$7.10	$12.60	$0.00	$56.50
	06/01/2016	$37.55	$7.10	$12.60	$0.00	$57.25
	12/01/2016	$38.55	$7.10	$12.60	$0.00	$58.25
For apprentice rates see "Apprentice- LABORER"						
CAISSON & UNDERPINNING TOP MAN *LABORERS - FOUNDATION AND MARINE*	12/01/2012	$32.30	$7.10	$12.60	$0.00	$52.00
	06/01/2013	$33.05	$7.10	$12.60	$0.00	$52.75
	12/01/2013	$33.80	$7.10	$12.60	$0.00	$53.50
	06/01/2014	$34.55	$7.10	$12.60	$0.00	$54.25
	12/01/2014	$35.30	$7.10	$12.60	$0.00	$55.00
	06/01/2015	$36.05	$7.10	$12.60	$0.00	$55.75
	12/01/2015	$36.80	$7.10	$12.60	$0.00	$56.50
	06/01/2016	$37.55	$7.10	$12.60	$0.00	$57.25
	12/01/2016	$38.55	$7.10	$12.60	$0.00	$58.25
For apprentice rates see "Apprentice- LABORER"						
CARBIDE CORE DRILL OPERATOR *LABORERS - ZONE 1*	12/01/2012	$32.55	$7.10	$12.45	$0.00	$52.10
	06/01/2013	$33.30	$7.10	$12.45	$0.00	$52.85
	12/01/2013	$34.05	$7.10	$12.45	$0.00	$53.60
	06/01/2014	$34.80	$7.10	$12.45	$0.00	$54.35
	12/01/2014	$35.55	$7.10	$12.45	$0.00	$55.10
	06/01/2015	$36.30	$7.10	$12.45	$0.00	$55.85
	12/01/2015	$37.05	$7.10	$12.45	$0.00	$56.60
	06/01/2016	$37.80	$7.10	$12.45	$0.00	$57.35
	12/01/2016	$38.80	$7.10	$12.45	$0.00	$58.35
For apprentice rates see "Apprentice- LABORER"						
CARPENTER *CARPENTERS -ZONE 2 (Eastern Massachusetts)*	03/01/2013	$33.92	$9.80	$15.61	$0.00	$59.33
	09/01/2013	$34.53	$9.80	$15.61	$0.00	$59.94
	03/01/2014	$35.13	$9.80	$15.61	$0.00	$60.54
	09/01/2014	$35.90	$9.80	$15.61	$0.00	$61.31
	03/01/2015	$36.67	$9.80	$15.61	$0.00	$62.08

Classification	Effective Date	Base Wage	Health	Pension	Supplemental Unemployment	Total Rate

Apprentice - *CARPENTER - Zone 2 Eastern MA*

Effective Date - 03/01/2013

Step	percent	Apprentice Base Wage	Health	Pension	Supplemental Unemployment	Total Rate
1	50	$16.96	$9.80	$1.57	$0.00	$28.33
2	60	$20.35	$9.80	$1.57	$0.00	$31.72
3	70	$23.74	$9.80	$10.90	$0.00	$44.44
4	75	$25.44	$9.80	$10.90	$0.00	$46.14
5	80	$27.14	$9.80	$12.47	$0.00	$49.41
6	80	$27.14	$9.80	$12.47	$0.00	$49.41
7	90	$30.53	$9.80	$14.04	$0.00	$54.37
8	90	$30.53	$9.80	$14.04	$0.00	$54.37

Effective Date - 09/01/2013

Step	percent	Apprentice Base Wage	Health	Pension	Supplemental Unemployment	Total Rate
1	50	$17.27	$9.80	$1.57	$0.00	$28.64
2	60	$20.72	$9.80	$1.57	$0.00	$32.09
3	70	$24.17	$9.80	$10.90	$0.00	$44.87
4	75	$25.90	$9.80	$10.90	$0.00	$46.60
5	80	$27.62	$9.80	$12.47	$0.00	$49.89
6	80	$27.62	$9.80	$12.47	$0.00	$49.89
7	90	$31.08	$9.80	$14.04	$0.00	$54.92
8	90	$31.08	$9.80	$14.04	$0.00	$54.92

Notes:

Apprentice to Journeyworker Ratio:1:5

CEMENT MASONRY/PLASTERING *BRICKLAYERS LOCAL 3 (QUINCY)*	02/01/2013	$42.55	$10.65	$18.61	$1.30	$73.11
	08/01/2013	$43.32	$10.65	$18.61	$1.30	$73.88
	02/01/2014	$43.75	$10.65	$18.61	$1.30	$74.31
	08/01/2014	$44.50	$10.65	$18.61	$1.30	$75.06
	02/01/2015	$44.93	$10.65	$18.61	$1.30	$75.49
	08/01/2015	$45.68	$10.65	$18.61	$1.30	$76.24
	02/01/2016	$46.13	$10.65	$18.61	$1.30	$76.69
	08/01/2016	$46.88	$10.65	$18.61	$1.30	$77.44
	02/01/2017	$47.33	$10.65	$18.61	$1.30	$77.89

Classification	Effective Date	Base Wage	Health	Pension	Supplemental Unemployment	Total Rate

Apprentice - *CEMENT MASONRY/PLASTERING - Eastern Mass (Quincy)*

Effective Date - 02/01/2013

Step	percent	Apprentice Base Wage	Health	Pension	Supplemental Unemployment	Total Rate
1	50	$21.28	$10.65	$12.11	$1.30	$45.34
2	60	$25.53	$10.65	$13.61	$1.30	$51.09
3	65	$27.66	$10.65	$14.61	$1.30	$54.22
4	70	$29.79	$10.65	$15.61	$1.30	$57.35
5	75	$31.91	$10.65	$16.61	$1.30	$60.47
6	80	$34.04	$10.65	$17.61	$1.30	$63.60
7	90	$38.30	$10.65	$18.61	$1.30	$68.86

Effective Date - 08/01/2013

Step	percent	Apprentice Base Wage	Health	Pension	Supplemental Unemployment	Total Rate
1	50	$21.66	$10.65	$12.11	$1.30	$45.72
2	60	$25.99	$10.65	$13.61	$1.30	$51.55
3	65	$28.16	$10.65	$14.61	$1.30	$54.72
4	70	$30.32	$10.65	$15.61	$1.30	$57.88
5	75	$32.49	$10.65	$16.61	$1.30	$61.05
6	80	$34.66	$10.65	$17.61	$1.30	$64.22
7	90	$38.99	$10.65	$18.61	$1.30	$69.55

Notes:

Steps are 6000 hours

Apprentice to Journeyworker Ratio:1:3

CHAIN SAW OPERATOR *LABORERS - ZONE 1*	12/01/2012	$32.55	$7.10	$12.45	$0.00	$52.10
	06/01/2013	$33.30	$7.10	$12.45	$0.00	$52.85
	12/01/2013	$34.05	$7.10	$12.45	$0.00	$53.60
	06/01/2014	$34.80	$7.10	$12.45	$0.00	$54.35
	12/01/2014	$35.55	$7.10	$12.45	$0.00	$55.10
	06/01/2015	$36.30	$7.10	$12.45	$0.00	$55.85
	12/01/2015	$37.05	$7.10	$12.45	$0.00	$56.60
	06/01/2016	$37.80	$7.10	$12.45	$0.00	$57.35
	12/01/2016	$38.80	$7.10	$12.45	$0.00	$58.35
For apprentice rates see "Apprentice- LABORER"						
CLAM SHELLS/SLURRY BUCKETS/HEADING MACHINES *OPERATING ENGINEERS LOCAL 4*	12/01/2012	$41.09	$10.00	$13.02	$0.00	$64.11
	06/01/2013	$41.87	$10.00	$13.02	$0.00	$64.89
	12/01/2013	$42.65	$10.00	$13.02	$0.00	$65.67
For apprentice rates see "Apprentice- OPERATING ENGINEERS"						
COMPRESSOR OPERATOR *OPERATING ENGINEERS LOCAL 4*	12/01/2012	$28.17	$10.00	$13.02	$0.00	$51.19
	06/01/2013	$28.72	$10.00	$13.02	$0.00	$51.74
	12/01/2013	$29.27	$10.00	$13.02	$0.00	$52.29
For apprentice rates see "Apprentice- OPERATING ENGINEERS"						
DELEADER (BRIDGE) *PAINTERS LOCAL 35 - ZONE 2*	01/01/2013	$45.01	$7.80	$15.60	$0.00	$68.41

Classification	Effective Date	Base Wage	Health	Pension	Supplemental Unemployment	Total Rate

Apprentice - *PAINTER Local 35 - BRIDGES/TANKS*

Effective Date - 01/01/2013

Step	percent	Apprentice Base Wage	Health	Pension	Supplemental Unemployment	Total Rate
1	50	$22.51	$7.80	$0.00	$0.00	$30.31
2	55	$24.76	$7.80	$3.52	$0.00	$36.08
3	60	$27.01	$7.80	$3.84	$0.00	$38.65
4	65	$29.26	$7.80	$4.16	$0.00	$41.22
5	70	$31.51	$7.80	$13.68	$0.00	$52.99
6	75	$33.76	$7.80	$14.00	$0.00	$55.56
7	80	$36.01	$7.80	$14.32	$0.00	$58.13
8	90	$40.51	$7.80	$14.96	$0.00	$63.27

Notes:

Steps are 750 hrs.

Apprentice to Journeyworker Ratio:1:1

DEMO: ADZEMAN *LABORERS - ZONE 1*	12/01/2011	$31.80	$7.10	$12.45	$0.00	$51.35
For apprentice rates see "Apprentice- LABORER"						
DEMO: BACKHOE/LOADER/HAMMER OPERATOR *LABORERS - ZONE 1*	12/01/2011	$32.80	$7.10	$12.45	$0.00	$52.35
For apprentice rates see "Apprentice- LABORER"						
DEMO: BURNERS *LABORERS - ZONE 1*	12/01/2011	$32.55	$7.10	$12.45	$0.00	$52.10
For apprentice rates see "Apprentice- LABORER"						
DEMO: CONCRETE CUTTER/SAWYER *LABORERS - ZONE 1*	12/01/2011	$32.80	$7.10	$12.45	$0.00	$52.35
For apprentice rates see "Apprentice- LABORER"						
DEMO: JACKHAMMER OPERATOR *LABORERS - ZONE 1*	12/01/2011	$32.55	$7.10	$12.45	$0.00	$52.10
For apprentice rates see "Apprentice- LABORER"						
DEMO: WRECKING LABORER *LABORERS - ZONE 1*	12/01/2011	$31.80	$7.10	$12.45	$0.00	$51.35
For apprentice rates see "Apprentice- LABORER"						
DIRECTIONAL DRILL MACHINE OPERATOR *OPERATING ENGINEERS LOCAL 4*	12/01/2012	$39.72	$10.00	$13.02	$0.00	$62.74
	06/01/2013	$40.49	$10.00	$13.02	$0.00	$63.51
	12/01/2013	$41.27	$10.00	$13.02	$0.00	$64.29
For apprentice rates see "Apprentice- OPERATING ENGINEERS"						
DIVER *PILE DRIVER LOCAL 56 (ZONE 1)*	08/01/2012	$54.88	$9.80	$17.67	$0.00	$82.35
	08/01/2013	$56.98	$9.80	$17.67	$0.00	$84.45
	08/01/2014	$59.08	$9.80	$17.67	$0.00	$86.55
	08/01/2015	$61.18	$9.80	$17.67	$0.00	$88.65
DIVER TENDER *PILE DRIVER LOCAL 56 (ZONE 1)*	08/01/2012	$54.88	$9.80	$17.67	$0.00	$82.35
	08/01/2013	$56.98	$9.80	$17.67	$0.00	$84.45
	08/01/2014	$59.08	$9.80	$17.67	$0.00	$86.55
	08/01/2015	$61.18	$9.80	$17.67	$0.00	$88.65

Classification	Effective Date	Base Wage	Health	Pension	Supplemental Unemployment	Total Rate
DIVER TENDER (EFFLUENT) *PILE DRIVER LOCAL 56 (ZONE 1)*	08/01/2012	$58.80	$9.80	$17.67	$0.00	$86.27
	08/01/2013	$61.05	$9.80	$17.67	$0.00	$88.52
	08/01/2014	$63.30	$9.80	$17.67	$0.00	$90.77
	08/01/2015	$65.55	$9.80	$17.67	$0.00	$93.02
DIVER/SLURRY (EFFLUENT) *PILE DRIVER LOCAL 56 (ZONE 1)*	08/01/2012	$82.32	$9.80	$17.67	$0.00	$109.79
	08/01/2013	$85.47	$9.80	$17.67	$0.00	$112.94
	08/01/2014	$88.62	$9.80	$17.67	$0.00	$116.09
	08/01/2015	$91.77	$9.80	$17.67	$0.00	$119.24
DRAWBRIDGE OPERATOR (Construction) *ELECTRICIANS LOCAL 103*	03/01/2013	$43.52	$13.00	$14.16	$0.00	$70.68
	09/01/2013	$44.20	$13.00	$14.18	$0.00	$71.38
	03/01/2014	$44.92	$13.00	$14.20	$0.00	$72.12
	09/01/2014	$45.60	$13.00	$14.22	$0.00	$72.82
	03/01/2015	$46.32	$13.00	$14.24	$0.00	$73.56
	09/01/2015	$47.27	$13.00	$14.27	$0.00	$74.54
	03/01/2016	$48.23	$13.00	$14.30	$0.00	$75.53
For apprentice rates see "Apprentice- ELECTRICIAN"						
ELECTRICIAN *ELECTRICIANS LOCAL 103*	03/01/2013	$43.52	$13.00	$14.16	$0.00	$70.68
	09/01/2013	$44.20	$13.00	$14.18	$0.00	$71.38
	03/01/2014	$44.92	$13.00	$14.20	$0.00	$72.12
	09/01/2014	$45.60	$13.00	$14.22	$0.00	$72.82
	03/01/2015	$46.32	$13.00	$14.24	$0.00	$73.56
	09/01/2015	$47.27	$13.00	$14.27	$0.00	$74.54
	03/01/2016	$48.23	$13.00	$14.30	$0.00	$75.53

Classification	Effective Date	Base Wage	Health	Pension	Supplemental Unemployment	Total Rate

Apprentice - *ELECTRICIAN - Local 103*

Effective Date - 03/01/2013

Step	percent	Apprentice Base Wage	Health	Pension	Supplemental Unemployment	Total Rate
1	40	$17.41	$13.00	$0.52	$0.00	$30.93
2	40	$17.41	$13.00	$0.52	$0.00	$30.93
3	45	$19.58	$13.00	$10.53	$0.00	$43.11
4	45	$19.58	$13.00	$10.53	$0.00	$43.11
5	50	$21.76	$13.00	$10.85	$0.00	$45.61
6	55	$23.94	$13.00	$11.19	$0.00	$48.13
7	60	$26.11	$13.00	$11.51	$0.00	$50.62
8	65	$28.29	$13.00	$11.85	$0.00	$53.14
9	70	$30.46	$13.00	$12.17	$0.00	$55.63
10	75	$32.64	$13.00	$12.51	$0.00	$58.15

Effective Date - 09/01/2013

Step	percent	Apprentice Base Wage	Health	Pension	Supplemental Unemployment	Total Rate
1	40	$17.68	$13.00	$0.53	$0.00	$31.21
2	40	$17.68	$13.00	$0.53	$0.00	$31.21
3	45	$19.89	$13.00	$10.54	$0.00	$43.43
4	45	$19.89	$13.00	$10.54	$0.00	$43.43
5	50	$22.10	$13.00	$10.86	$0.00	$45.96
6	55	$24.31	$13.00	$11.20	$0.00	$48.51
7	60	$26.52	$13.00	$11.53	$0.00	$51.05
8	65	$28.73	$13.00	$11.86	$0.00	$53.59
9	70	$30.94	$13.00	$12.19	$0.00	$56.13
10	75	$33.15	$13.00	$12.53	$0.00	$58.68

Notes: :

App Prior 1/1/03; 30/35/40/45/50/55/65/70/75/80

Apprentice to Journeyworker Ratio:2:3***

ELEVATOR CONSTRUCTOR *ELEVATOR CONSTRUCTORS LOCAL 4*	01/01/2012	$52.45	$8.78	$6.96	$0.00	$68.19

Classification	Effective Date	Base Wage	Health	Pension	Supplemental Unemployment	Total Rate

Apprentice - *ELEVATOR CONSTRUCTOR - Local 4*

Effective Date - 01/01/2012

Step	percent	Apprentice Base Wage	Health	Pension	Supplemental Unemployment	Total Rate
1	50	$26.23	$8.78	$0.00	$0.00	$35.01
2	55	$28.85	$8.78	$6.96	$0.00	$44.59
3	65	$34.09	$8.78	$6.96	$0.00	$49.83
4	70	$36.72	$8.78	$6.96	$0.00	$52.46
5	80	$41.96	$8.78	$6.96	$0.00	$57.70

Notes:

Steps 1-2 are 6 mos.; Steps 3-5 are 1 year

Apprentice to Journeyworker Ratio:1:1

ELEVATOR CONSTRUCTOR HELPER *ELEVATOR CONSTRUCTORS LOCAL 4*	01/01/2012	$38.59	$8.78	$6.96	$0.00	$54.33
FENCE & GUARD RAIL ERECTOR *LABORERS - ZONE 1*	12/01/2012	$32.55	$7.10	$12.45	$0.00	$52.10
	06/01/2013	$33.30	$7.10	$12.45	$0.00	$52.85
	12/01/2013	$34.05	$7.10	$12.45	$0.00	$53.60
	06/01/2014	$34.80	$7.10	$12.45	$0.00	$54.35
	12/01/2014	$35.55	$7.10	$12.45	$0.00	$55.10
	06/01/2015	$36.30	$7.10	$12.45	$0.00	$55.85
	12/01/2015	$37.05	$7.10	$12.45	$0.00	$56.60
	06/01/2016	$37.80	$7.10	$12.45	$0.00	$57.35
	12/01/2016	$38.80	$7.10	$12.45	$0.00	$58.35
For apprentice rates see "Apprentice- LABORER"						
FIELD ENG.INST.PERSON-BLDG,SITE,HVY/HWY *OPERATING ENGINEERS LOCAL 4*	11/01/2012	$38.26	$10.00	$12.65	$0.00	$60.91
	05/01/2013	$38.50	$10.00	$13.02	$0.00	$61.52
	11/01/2013	$39.26	$10.00	$13.02	$0.00	$62.28
	05/01/2014	$40.03	$10.00	$13.02	$0.00	$63.05
For apprentice rates see "Apprentice- OPERATING ENGINEERS"						
FIELD ENG.PARTY CHIEF-BLDG,SITE,HVY/HWY *OPERATING ENGINEERS LOCAL 4*	11/01/2012	$39.66	$10.00	$12.65	$0.00	$62.31
	05/01/2013	$39.91	$10.00	$13.02	$0.00	$62.93
	11/01/2013	$40.68	$10.00	$13.02	$0.00	$63.70
	05/01/2014	$41.45	$10.00	$13.02	$0.00	$64.47
For apprentice rates see "Apprentice- OPERATING ENGINEERS"						
FIELD ENG.ROD PERSON-BLDG,SITE,HVY/HWY *OPERATING ENGINEERS LOCAL 4*	11/01/2012	$21.18	$10.00	$12.65	$0.00	$43.83
	05/01/2013	$21.17	$10.00	$13.02	$0.00	$44.19
	11/01/2013	$21.63	$10.00	$13.02	$0.00	$44.65
	05/01/2014	$22.08	$10.00	$13.02	$0.00	$45.10
For apprentice rates see "Apprentice- OPERATING ENGINEERS"						

Classification	Effective Date	Base Wage	Health	Pension	Supplemental Unemployment	Total Rate
FIRE ALARM INSTALLER *ELECTRICIANS LOCAL 103*	03/01/2013	$43.52	$13.00	$14.16	$0.00	$70.68
	09/01/2013	$44.20	$13.00	$14.18	$0.00	$71.38
	03/01/2014	$44.92	$13.00	$14.20	$0.00	$72.12
	09/01/2014	$45.60	$13.00	$14.22	$0.00	$72.82
	03/01/2015	$46.32	$13.00	$14.24	$0.00	$73.56
	09/01/2015	$47.27	$13.00	$14.27	$0.00	$74.54
	03/01/2016	$48.23	$13.00	$14.30	$0.00	$75.53
For apprentice rates see "Apprentice- ELECTRICIAN"						
FIRE ALARM REPAIR / MAINTENANCE / COMMISSIONING *ELECTRICIANS LOCAL 103*	03/01/2013	$32.64	$13.00	$12.51	$0.00	$58.15
	09/01/2013	$33.15	$13.00	$12.52	$0.00	$58.67
	03/01/2014	$33.69	$13.00	$12.54	$0.00	$59.23
	09/01/2014	$34.20	$13.00	$12.56	$0.00	$59.76
	03/01/2015	$34.74	$13.00	$12.57	$0.00	$60.31
	09/01/2015	$35.45	$13.00	$12.59	$0.00	$61.04
	03/01/2016	$36.17	$13.00	$12.62	$0.00	$61.79
For apprentice rates see "Apprentice- TELECOMMUNICATIONS TECHNICIAN"						
FIREMAN (ASST. ENGINEER) *OPERATING ENGINEERS LOCAL 4*	12/01/2012	$33.61	$10.00	$13.02	$0.00	$56.63
	06/01/2013	$34.26	$10.00	$13.02	$0.00	$57.28
	12/01/2013	$34.92	$10.00	$13.02	$0.00	$57.94
For apprentice rates see "Apprentice- OPERATING ENGINEERS"						
FLAGGER & SIGNALER *LABORERS - ZONE 1*	12/01/2012	$20.50	$7.10	$12.45	$0.00	$40.05
	06/01/2013	$20.50	$7.10	$12.45	$0.00	$40.05
	12/01/2013	$20.50	$7.10	$12.45	$0.00	$40.05
	06/01/2014	$20.50	$7.10	$12.45	$0.00	$40.05
	12/01/2014	$20.50	$7.10	$12.45	$0.00	$40.05
	06/01/2015	$20.50	$7.10	$12.45	$0.00	$40.05
	12/01/2015	$20.50	$7.10	$12.45	$0.00	$40.05
	06/01/2016	$20.50	$7.10	$12.45	$0.00	$40.05
	12/01/2016	$20.50	$7.10	$12.45	$0.00	$40.05
For apprentice rates see "Apprentice- LABORER"						
FLOORCOVERER *FLOORCOVERERS LOCAL 2168 ZONE I*	03/01/2013	$38.61	$9.80	$16.71	$0.00	$65.12
	09/01/2013	$38.61	$9.80	$16.71	$0.00	$65.12
	03/01/2014	$38.61	$9.80	$16.71	$0.00	$65.12

Classification	Effective Date	Base Wage	Health	Pension	Supplemental Unemployment	Total Rate

Apprentice - *FLOORCOVERER - Local 2168 Zone I*

Effective Date - 03/01/2013

Step	percent	Apprentice Base Wage	Health	Pension	Supplemental Unemployment	Total Rate
1	50	$19.31	$9.80	$1.79	$0.00	$30.90
2	55	$21.24	$9.80	$1.79	$0.00	$32.83
3	60	$23.17	$9.80	$11.34	$0.00	$44.31
4	65	$25.10	$9.80	$11.34	$0.00	$46.24
5	70	$27.03	$9.80	$13.13	$0.00	$49.96
6	75	$28.96	$9.80	$13.13	$0.00	$51.89
7	80	$30.89	$9.80	$14.92	$0.00	$55.61
8	85	$32.82	$9.80	$14.92	$0.00	$57.54

Effective Date - 09/01/2013

Step	percent	Apprentice Base Wage	Health	Pension	Supplemental Unemployment	Total Rate
1	50	$19.31	$9.80	$1.79	$0.00	$30.90
2	55	$21.24	$9.80	$1.79	$0.00	$32.83
3	60	$23.17	$9.80	$11.34	$0.00	$44.31
4	65	$25.10	$9.80	$11.34	$0.00	$46.24
5	70	$27.03	$9.80	$13.13	$0.00	$49.96
6	75	$28.96	$9.80	$13.13	$0.00	$51.89
7	80	$30.89	$9.80	$14.92	$0.00	$55.61
8	85	$32.82	$9.80	$14.92	$0.00	$57.54

Notes:

Steps are 750 hrs.

Apprentice to Journeyworker Ratio:1:1

FORK LIFT/CHERRY PICKER *OPERATING ENGINEERS LOCAL 4*	12/01/2012	$40.09	$10.00	$13.02	$0.00	$63.11
	06/01/2013	$40.87	$10.00	$13.02	$0.00	$63.89
	12/01/2013	$41.65	$10.00	$13.02	$0.00	$64.67
For apprentice rates see "Apprentice- OPERATING ENGINEERS"						
GENERATOR/LIGHTING PLANT/HEATERS *OPERATING ENGINEERS LOCAL 4*	12/01/2012	$28.17	$10.00	$13.02	$0.00	$51.19
	06/01/2013	$28.72	$10.00	$13.02	$0.00	$51.74
	12/01/2013	$29.27	$10.00	$13.02	$0.00	$52.29
For apprentice rates see "Apprentice- OPERATING ENGINEERS"						
GLAZIER (GLASS PLANK/AIR BARRIER/INTERIOR SYSTEMS) *GLAZIERS LOCAL 35 (ZONE 2)*	01/01/2013	$35.51	$7.80	$14.60	$0.00	$57.91

Classification	Effective Date	Base Wage	Health	Pension	Supplemental Unemployment	Total Rate

Apprentice - *GLAZIER - Local 35 Zone 2*

Effective Date - 01/01/2013

Step	percent	Apprentice Base Wage	Health	Pension	Supplemental Unemployment	Total Rate
1	50	$17.76	$7.80	$0.00	$0.00	$25.56
2	55	$19.53	$7.80	$3.25	$0.00	$30.58
3	60	$21.31	$7.80	$3.54	$0.00	$32.65
4	65	$23.08	$7.80	$3.84	$0.00	$34.72
5	70	$24.86	$7.80	$12.83	$0.00	$45.49
6	75	$26.63	$7.80	$13.13	$0.00	$47.56
7	80	$28.41	$7.80	$13.42	$0.00	$49.63
8	90	$31.96	$7.80	$14.01	$0.00	$53.77

Notes:

Steps are 750 hrs.

Apprentice to Journeyworker Ratio:1:1

HOISTING ENGINEER/CRANES/GRADALLS *OPERATING ENGINEERS LOCAL 4*	12/01/2012	$40.09	$10.00	$13.02	$0.00	$63.11
	06/01/2013	$40.87	$10.00	$13.02	$0.00	$63.89
	12/01/2013	$41.65	$10.00	$13.02	$0.00	$64.67

Classification	Effective Date	Base Wage	Health	Pension	Supplemental Unemployment	Total Rate

Apprentice - *OPERATING ENGINEERS - Local 4*

Effective Date - 12/01/2012

Step	percent	Apprentice Base Wage	Health	Pension	Supplemental Unemployment	Total Rate
1	55	$22.05	$10.00	$0.00	$0.00	$32.05
2	60	$24.05	$10.00	$13.02	$0.00	$47.07
3	65	$26.06	$10.00	$13.02	$0.00	$49.08
4	70	$28.06	$10.00	$13.02	$0.00	$51.08
5	75	$30.07	$10.00	$13.02	$0.00	$53.09
6	80	$32.07	$10.00	$13.02	$0.00	$55.09
7	85	$34.08	$10.00	$13.02	$0.00	$57.10
8	90	$36.08	$10.00	$13.02	$0.00	$59.10

Effective Date - 06/01/2013

Step	percent	Apprentice Base Wage	Health	Pension	Supplemental Unemployment	Total Rate
1	55	$22.48	$10.00	$0.00	$0.00	$32.48
2	60	$24.52	$10.00	$13.02	$0.00	$47.54
3	65	$26.57	$10.00	$13.02	$0.00	$49.59
4	70	$28.61	$10.00	$13.02	$0.00	$51.63
5	75	$30.65	$10.00	$13.02	$0.00	$53.67
6	80	$32.70	$10.00	$13.02	$0.00	$55.72
7	85	$34.74	$10.00	$13.02	$0.00	$57.76
8	90	$36.78	$10.00	$13.02	$0.00	$59.80

Notes:

Apprentice to Journeyworker Ratio:1:6

HVAC (DUCTWORK) *SHEETMETAL WORKERS LOCAL 17 - A*	02/01/2013	$42.32	$9.82	$18.24	$2.11	$72.49
For apprentice rates see "Apprentice- SHEET METAL WORKER"						
HVAC (ELECTRICAL CONTROLS) *ELECTRICIANS LOCAL 103*	03/01/2013	$43.52	$13.00	$14.16	$0.00	$70.68
	09/01/2013	$44.20	$13.00	$14.18	$0.00	$71.38
	03/01/2014	$44.92	$13.00	$14.20	$0.00	$72.12
	09/01/2014	$45.60	$13.00	$14.22	$0.00	$72.82
	03/01/2015	$46.32	$13.00	$14.24	$0.00	$73.56
	09/01/2015	$47.27	$13.00	$14.27	$0.00	$74.54
	03/01/2016	$48.23	$13.00	$14.30	$0.00	$75.53
For apprentice rates see "Apprentice- ELECTRICIAN"						
HVAC (TESTING AND BALANCING - AIR) *SHEETMETAL WORKERS LOCAL 17 - A*	02/01/2013	$42.32	$9.82	$18.24	$2.11	$72.49
For apprentice rates see "Apprentice- SHEET METAL WORKER"						
HVAC (TESTING AND BALANCING -WATER) *PIPEFITTERS LOCAL 537*	03/01/2013	$49.34	$8.75	$14.39	$0.00	$72.48
For apprentice rates see "Apprentice- PIPEFITTER" or "PLUMBER/PIPEFITTER"						
HVAC MECHANIC *PIPEFITTERS LOCAL 537*	03/01/2013	$49.34	$8.75	$14.39	$0.00	$72.48

Classification	Effective Date	Base Wage	Health	Pension	Supplemental Unemployment	Total Rate
For apprentice rates see "Apprentice- PIPEFITTER" or "PLUMBER/PIPEFITTER"						
HYDRAULIC DRILLS *LABORERS - ZONE 1*	12/01/2012	$33.05	$7.10	$12.45	$0.00	$52.60
	06/01/2013	$33.80	$7.10	$12.45	$0.00	$53.35
	12/01/2013	$34.55	$7.10	$12.45	$0.00	$54.10
	06/01/2014	$35.30	$7.10	$12.45	$0.00	$54.85
	12/01/2014	$36.05	$7.10	$12.45	$0.00	$55.60
	06/01/2015	$36.80	$7.10	$12.45	$0.00	$56.35
	12/01/2015	$37.55	$7.10	$12.45	$0.00	$57.10
	06/01/2016	$38.30	$7.10	$12.45	$0.00	$57.85
	12/01/2016	$39.30	$7.10	$12.45	$0.00	$58.85
For apprentice rates see "Apprentice- LABORER"						
INSULATOR (PIPES & TANKS) *HEAT & FROST INSULATORS LOCAL 6 (BOSTON)*	09/01/2012	$41.46	$10.65	$11.50	$0.00	$63.61
	09/01/2013	$43.06	$10.65	$11.50	$0.00	$65.21
	09/01/2014	$45.06	$10.65	$11.50	$0.00	$67.21

Apprentice - *ASBESTOS INSULATOR (Pipes & Tanks) - Local 6 Boston*

Effective Date - 09/01/2012

Step	percent	Apprentice Base Wage	Health	Pension	Supplemental Unemployment	Total Rate
1	50	$20.73	$10.65	$8.60	$0.00	$39.98
2	60	$24.88	$10.65	$9.18	$0.00	$44.71
3	70	$29.02	$10.65	$9.76	$0.00	$49.43
4	80	$33.17	$10.65	$10.34	$0.00	$54.16

Effective Date - 09/01/2013

Step	percent	Apprentice Base Wage	Health	Pension	Supplemental Unemployment	Total Rate
1	50	$21.53	$10.65	$8.60	$0.00	$40.78
2	60	$25.84	$10.65	$9.18	$0.00	$45.67
3	70	$30.14	$10.65	$9.76	$0.00	$50.55
4	80	$34.45	$10.65	$10.34	$0.00	$55.44

Notes:

Steps are 1 year

Apprentice to Journeyworker Ratio:1:4

IRONWORKER/WELDER *IRONWORKERS LOCAL 7 (BOSTON AREA)*	03/16/2013	$40.23	$7.70	$18.35	$0.00	$66.28

Classification	Effective Date	Base Wage	Health	Pension	Supplemental Unemployment	Total Rate

Apprentice - *IRONWORKER - Local 7 Boston*

Effective Date - 03/16/2013

Step	percent	Apprentice Base Wage	Health	Pension	Supplemental Unemployment	Total Rate
1	60	$24.14	$7.70	$18.35	$0.00	$50.19
2	70	$28.16	$7.70	$18.35	$0.00	$54.21
3	75	$30.17	$7.70	$18.35	$0.00	$56.22
4	80	$32.18	$7.70	$18.35	$0.00	$58.23
5	85	$34.20	$7.70	$18.35	$0.00	$60.25
6	90	$36.21	$7.70	$18.35	$0.00	$62.26

Notes:

** Structural 1:6; Ornamental 1:4

Apprentice to Journeyworker Ratio:**

JACKHAMMER & PAVING BREAKER OPERATOR *LABORERS - ZONE 1*	12/01/2012	$32.55	$7.10	$12.45	$0.00	$52.10
	06/01/2013	$33.30	$7.10	$12.45	$0.00	$52.85
	12/01/2013	$34.05	$7.10	$12.45	$0.00	$53.60
	06/01/2014	$34.80	$7.10	$12.45	$0.00	$54.35
	12/01/2014	$35.55	$7.10	$12.45	$0.00	$55.10
	06/01/2015	$36.30	$7.10	$12.45	$0.00	$55.85
	12/01/2015	$37.05	$7.10	$12.45	$0.00	$56.60
	06/01/2016	$37.80	$7.10	$12.45	$0.00	$57.35
	12/01/2016	$38.80	$7.10	$12.45	$0.00	$58.35
For apprentice rates see "Apprentice- LABORER"						
LABORER *LABORERS - ZONE 1*	12/01/2012	$32.30	$7.10	$12.45	$0.00	$51.85
	06/01/2013	$33.05	$7.10	$12.45	$0.00	$52.60
	12/01/2013	$33.80	$7.10	$12.45	$0.00	$53.35
	06/01/2014	$34.55	$7.10	$12.45	$0.00	$54.10
	12/01/2014	$35.30	$7.10	$12.45	$0.00	$54.85
	06/01/2015	$36.05	$7.10	$12.45	$0.00	$55.60
	12/01/2015	$36.80	$7.10	$12.45	$0.00	$56.35
	06/01/2016	$37.55	$7.10	$12.45	$0.00	$57.10
	12/01/2016	$38.55	$7.10	$12.45	$0.00	$58.10

Classification	Effective Date	Base Wage	Health	Pension	Supplemental Unemployment	Total Rate

Apprentice - *LABORER - Zone 1*

Effective Date - 12/01/2012

Step	percent	Apprentice Base Wage	Health	Pension	Supplemental Unemployment	Total Rate
1	60	$19.38	$7.10	$12.45	$0.00	$38.93
2	70	$22.61	$7.10	$12.45	$0.00	$42.16
3	80	$25.84	$7.10	$12.45	$0.00	$45.39
4	90	$29.07	$7.10	$12.45	$0.00	$48.62

Effective Date - 06/01/2013

Step	percent	Apprentice Base Wage	Health	Pension	Supplemental Unemployment	Total Rate
1	60	$19.83	$7.10	$12.45	$0.00	$39.38
2	70	$23.14	$7.10	$12.45	$0.00	$42.69
3	80	$26.44	$7.10	$12.45	$0.00	$45.99
4	90	$29.75	$7.10	$12.45	$0.00	$49.30

Notes:

Apprentice to Journeyworker Ratio:1:5

LABORER: CARPENTER TENDER *LABORERS - ZONE 1*	12/01/2012	$32.30	$7.10	$12.45	$0.00	$51.85
	06/01/2013	$33.05	$7.10	$12.45	$0.00	$52.60
	12/01/2013	$33.80	$7.10	$12.45	$0.00	$53.35
	06/01/2014	$34.55	$7.10	$12.45	$0.00	$54.10
	12/01/2014	$35.30	$7.10	$12.45	$0.00	$54.85
	06/01/2015	$36.05	$7.10	$12.45	$0.00	$55.60
	12/01/2015	$36.80	$7.10	$12.45	$0.00	$56.35
	06/01/2016	$37.55	$7.10	$12.45	$0.00	$57.10
	12/01/2016	$38.55	$7.10	$12.45	$0.00	$58.10
For apprentice rates see "Apprentice- LABORER"						
LABORER: CEMENT FINISHER TENDER *LABORERS - ZONE 1*	12/01/2012	$32.30	$7.10	$12.45	$0.00	$51.85
	06/01/2013	$33.05	$7.10	$12.45	$0.00	$52.60
	12/01/2013	$33.80	$7.10	$12.45	$0.00	$53.35
	06/01/2014	$34.55	$7.10	$12.45	$0.00	$54.10
	12/01/2014	$35.30	$7.10	$12.45	$0.00	$54.85
	06/01/2015	$36.05	$7.10	$12.45	$0.00	$55.60
	12/01/2015	$36.80	$7.10	$12.45	$0.00	$56.35
	06/01/2016	$37.55	$7.10	$12.45	$0.00	$57.10
	12/01/2016	$38.55	$7.10	$12.45	$0.00	$58.10
For apprentice rates see "Apprentice- LABORER"						
LABORER: HAZARDOUS WASTE/ASBESTOS REMOVER *LABORERS - ZONE 1*	12/01/2011	$31.80	$7.10	$12.45	$0.00	$51.35
For apprentice rates see "Apprentice- LABORER"						

Classification	Effective Date	Base Wage	Health	Pension	Supplemental Unemployment	Total Rate
LABORER: MASON TENDER *LABORERS - ZONE 1*	12/01/2012	$32.55	$7.10	$12.45	$0.00	$52.10
	06/01/2013	$33.30	$7.10	$12.45	$0.00	$52.85
	12/01/2013	$34.05	$7.10	$12.45	$0.00	$53.60
	06/01/2014	$34.80	$7.10	$12.45	$0.00	$54.35
	12/01/2014	$35.55	$7.10	$12.45	$0.00	$55.10
	06/01/2015	$36.30	$7.10	$12.45	$0.00	$55.85
	12/01/2015	$37.05	$7.10	$12.45	$0.00	$56.60
	06/01/2016	$37.80	$7.10	$12.45	$0.00	$57.35
	12/01/2016	$38.80	$7.10	$12.45	$0.00	$58.35
For apprentice rates see "Apprentice- LABORER"						
LABORER: MULTI-TRADE TENDER *LABORERS - ZONE 1*	12/01/2012	$32.30	$7.10	$12.45	$0.00	$51.85
	06/01/2013	$33.05	$7.10	$12.45	$0.00	$52.60
	12/01/2013	$33.80	$7.10	$12.45	$0.00	$53.35
	06/01/2014	$34.55	$7.10	$12.45	$0.00	$54.10
	12/01/2014	$35.30	$7.10	$12.45	$0.00	$54.85
	06/01/2015	$36.05	$7.10	$12.45	$0.00	$55.60
	12/01/2015	$36.80	$7.10	$12.45	$0.00	$56.35
	06/01/2016	$37.55	$7.10	$12.45	$0.00	$57.10
	12/01/2016	$38.55	$7.10	$12.45	$0.00	$58.10
For apprentice rates see "Apprentice- LABORER"						
LABORER: TREE REMOVER *LABORERS - ZONE 1*	12/01/2012	$32.30	$7.10	$12.45	$0.00	$51.85
	06/01/2013	$33.05	$7.10	$12.45	$0.00	$52.60
	12/01/2013	$33.80	$7.10	$12.45	$0.00	$53.35
	06/01/2014	$34.55	$7.10	$12.45	$0.00	$54.10
	12/01/2014	$35.30	$7.10	$12.45	$0.00	$54.85
	06/01/2015	$36.05	$7.10	$12.45	$0.00	$55.60
	12/01/2015	$36.80	$7.10	$12.45	$0.00	$56.35
	06/01/2016	$37.55	$7.10	$12.45	$0.00	$57.10
	12/01/2016	$38.55	$7.10	$12.45	$0.00	$58.10
This classification applies to the wholesale removal of standing trees including all associated trimming of branches and limbs, and applies to the removal of branches at locations not on or around utility lines. For apprentice rates see "Apprentice- LABORER"						
LASER BEAM OPERATOR *LABORERS - ZONE 1*	12/01/2012	$32.55	$7.10	$12.45	$0.00	$52.10
	06/01/2013	$33.30	$7.10	$12.45	$0.00	$52.85
	12/01/2013	$34.05	$7.10	$12.45	$0.00	$53.60
	06/01/2014	$34.80	$7.10	$12.45	$0.00	$54.35
	12/01/2014	$35.55	$7.10	$12.45	$0.00	$55.10
	06/01/2015	$36.30	$7.10	$12.45	$0.00	$55.85
	12/01/2015	$37.05	$7.10	$12.45	$0.00	$56.60
	06/01/2016	$37.80	$7.10	$12.45	$0.00	$57.35
	12/01/2016	$38.80	$7.10	$12.45	$0.00	$58.35
For apprentice rates see "Apprentice- LABORER"						

Classification	Effective Date	Base Wage	Health	Pension	Supplemental Unemployment	Total Rate
MARBLE & TILE FINISHERS *BRICKLAYERS LOCAL 3 - MARBLE & TILE*	02/01/2013	$36.20	$10.18	$16.51	$0.00	$62.89
	08/01/2013	$36.91	$10.18	$16.58	$0.00	$63.67
	02/01/2014	$37.36	$10.18	$16.58	$0.00	$64.12
	08/01/2014	$38.07	$10.18	$16.65	$0.00	$64.90
	02/01/2015	$38.52	$10.18	$16.65	$0.00	$65.35
	08/01/2015	$39.23	$10.18	$16.72	$0.00	$66.13
	02/01/2016	$39.68	$10.18	$16.72	$0.00	$66.58
	08/01/2016	$40.38	$10.18	$16.80	$0.00	$67.36
	02/01/2017	$40.84	$10.18	$16.80	$0.00	$67.82

Apprentice - *MARBLE & TILE FINISHER - Local 3 Marble & Tile*

Effective Date - 02/01/2013

Step	percent	Apprentice Base Wage	Health	Pension	Supplemental Unemployment	Total Rate
1	50	$18.10	$10.18	$16.51	$0.00	$44.79
2	60	$21.72	$10.18	$16.51	$0.00	$48.41
3	70	$25.34	$10.18	$16.51	$0.00	$52.03
4	80	$28.96	$10.18	$16.51	$0.00	$55.65
5	90	$32.58	$10.18	$16.51	$0.00	$59.27

Effective Date - 08/01/2013

Step	percent	Apprentice Base Wage	Health	Pension	Supplemental Unemployment	Total Rate
1	50	$18.46	$10.18	$16.58	$0.00	$45.22
2	60	$22.15	$10.18	$16.58	$0.00	$48.91
3	70	$25.84	$10.18	$16.58	$0.00	$52.60
4	80	$29.53	$10.18	$16.58	$0.00	$56.29
5	90	$33.22	$10.18	$16.58	$0.00	$59.98

Notes:

Apprentice to Journeyworker Ratio:1:3

MARBLE MASONS,TILELAYERS & TERRAZZO MECH *BRICKLAYERS LOCAL 3 - MARBLE & TILE*	02/01/2013	$47.45	$10.18	$17.83	$0.00	$75.46
	08/01/2013	$48.35	$10.18	$17.90	$0.00	$76.43
	02/01/2014	$48.91	$10.18	$17.90	$0.00	$76.99
	08/01/2014	$49.81	$10.18	$17.97	$0.00	$77.96
	02/01/2015	$50.37	$10.18	$17.97	$0.00	$78.52
	08/01/2015	$51.27	$10.18	$18.04	$0.00	$79.49
	02/01/2016	$51.84	$10.18	$18.04	$0.00	$80.06
	08/01/2016	$52.74	$10.18	$18.12	$0.00	$81.04
	02/01/2017	$53.31	$10.18	$18.12	$0.00	$81.61

Classification	Effective Date	Base Wage	Health	Pension	Supplemental Unemployment	Total Rate

Apprentice - *MARBLE-TILE-TERRAZZO MECHANIC - Local 3 Marble & Tile*

Effective Date - 02/01/2013

Step	percent	Apprentice Base Wage	Health	Pension	Supplemental Unemployment	Total Rate
1	50	$23.73	$10.18	$17.83	$0.00	$51.74
2	60	$28.47	$10.18	$17.83	$0.00	$56.48
3	70	$33.22	$10.18	$17.83	$0.00	$61.23
4	80	$37.96	$10.18	$17.83	$0.00	$65.97
5	90	$42.71	$10.18	$17.83	$0.00	$70.72

Effective Date - 08/01/2013

Step	percent	Apprentice Base Wage	Health	Pension	Supplemental Unemployment	Total Rate
1	50	$24.18	$10.18	$17.90	$0.00	$52.26
2	60	$29.01	$10.18	$17.90	$0.00	$57.09
3	70	$33.85	$10.18	$17.90	$0.00	$61.93
4	80	$38.68	$10.18	$17.90	$0.00	$66.76
5	90	$43.52	$10.18	$17.90	$0.00	$71.60

Notes:

Apprentice to Journeyworker Ratio:1:5

MECH. SWEEPER OPERATOR (ON CONST. SITES) *OPERATING ENGINEERS LOCAL 4*	12/01/2012	$39.72	$10.00	$13.02	$0.00	$62.74
	06/01/2013	$40.49	$10.00	$13.02	$0.00	$63.51
	12/01/2013	$41.27	$10.00	$13.02	$0.00	$64.29
For apprentice rates see "Apprentice- OPERATING ENGINEERS"						
MECHANICS MAINTENANCE *OPERATING ENGINEERS LOCAL 4*	12/01/2012	$39.72	$10.00	$13.02	$0.00	$62.74
	06/01/2013	$40.49	$10.00	$13.02	$0.00	$63.51
	12/01/2013	$41.27	$10.00	$13.02	$0.00	$64.29
For apprentice rates see "Apprentice- OPERATING ENGINEERS"						
MILLWRIGHT (Zone 1) *MILLWRIGHTS LOCAL 1121 - Zone 1*	04/01/2011	$33.57	$8.67	$15.61	$0.00	$57.85

Classification	Effective Date	Base Wage	Health	Pension	Supplemental Unemployment	Total Rate

Apprentice - *MILLWRIGHT - Local 1121 Zone 1*

Effective Date - 04/01/2011

Step	percent	Apprentice Base Wage	Health	Pension	Supplemental Unemployment	Total Rate
1	50	$16.79	$8.67	$11.64	$0.00	$37.10
2	55	$18.46	$8.67	$11.64	$0.00	$38.77
3	60	$20.14	$8.67	$13.23	$0.00	$42.04
4	65	$21.82	$8.67	$13.23	$0.00	$43.72
5	70	$23.50	$8.67	$14.02	$0.00	$46.19
6	75	$25.18	$8.67	$14.02	$0.00	$47.87
7	80	$26.86	$8.67	$14.82	$0.00	$50.35
8	85	$28.53	$8.67	$14.82	$0.00	$52.02

Notes:

Apprentice to Journeyworker Ratio:1:5

MORTAR MIXER *LABORERS - ZONE 1*	12/01/2012	$32.55	$7.10	$12.45	$0.00	$52.10
	06/01/2013	$33.30	$7.10	$12.45	$0.00	$52.85
	12/01/2013	$34.05	$7.10	$12.45	$0.00	$53.60
	06/01/2014	$34.80	$7.10	$12.45	$0.00	$54.35
	12/01/2014	$35.55	$7.10	$12.45	$0.00	$55.10
	06/01/2015	$36.30	$7.10	$12.45	$0.00	$55.85
	12/01/2015	$37.05	$7.10	$12.45	$0.00	$56.60
	06/01/2016	$37.80	$7.10	$12.45	$0.00	$57.35
	12/01/2016	$38.80	$7.10	$12.45	$0.00	$58.35
For apprentice rates see "Apprentice- LABORER"						
OILER (OTHER THAN TRUCK CRANES,GRADALLS) *OPERATING ENGINEERS LOCAL 4*	12/01/2012	$21.28	$10.00	$13.02	$0.00	$44.30
	06/01/2013	$21.70	$10.00	$13.02	$0.00	$44.72
	12/01/2013	$22.12	$10.00	$13.02	$0.00	$45.14
For apprentice rates see "Apprentice- OPERATING ENGINEERS"						
OILER (TRUCK CRANES, GRADALLS) *OPERATING ENGINEERS LOCAL 4*	12/01/2012	$24.62	$10.00	$13.02	$0.00	$47.64
	06/01/2013	$25.10	$10.00	$13.02	$0.00	$48.12
	12/01/2013	$25.59	$10.00	$13.02	$0.00	$48.61
For apprentice rates see "Apprentice- OPERATING ENGINEERS"						
OTHER POWER DRIVEN EQUIPMENT - CLASS II *OPERATING ENGINEERS LOCAL 4*	12/01/2012	$39.72	$10.00	$13.02	$0.00	$62.74
	06/01/2013	$40.49	$10.00	$13.02	$0.00	$63.51
	12/01/2013	$41.27	$10.00	$13.02	$0.00	$64.29
For apprentice rates see "Apprentice- OPERATING ENGINEERS"						
PAINTER (BRIDGES/TANKS) *PAINTERS LOCAL 35 - ZONE 2*	01/01/2013	$45.01	$7.80	$15.60	$0.00	$68.41

Classification	Effective Date	Base Wage	Health	Pension	Supplemental Unemployment	Total Rate

Apprentice - *PAINTER Local 35 - BRIDGES/TANKS*

Effective Date - 01/01/2013

Step	percent	Apprentice Base Wage	Health	Pension	Supplemental Unemployment	Total Rate
1	50	$22.51	$7.80	$0.00	$0.00	$30.31
2	55	$24.76	$7.80	$3.52	$0.00	$36.08
3	60	$27.01	$7.80	$3.84	$0.00	$38.65
4	65	$29.26	$7.80	$4.16	$0.00	$41.22
5	70	$31.51	$7.80	$13.68	$0.00	$52.99
6	75	$33.76	$7.80	$14.00	$0.00	$55.56
7	80	$36.01	$7.80	$14.32	$0.00	$58.13
8	90	$40.51	$7.80	$14.96	$0.00	$63.27

Notes:

Steps are 750 hrs.

Apprentice to Journeyworker Ratio:1:1

PAINTER (SPRAY OR SANDBLAST, NEW) *	01/01/2013	$35.91	$7.80	$15.60	$0.00	$59.31

* If 30% or more of surfaces to be painted are new construction, NEW paint rate shall be used.*PAINTERS LOCAL 35 - ZONE 2*

Apprentice - *PAINTER Local 35 Zone 2 - Spray/Sandblast - New*

Effective Date - 01/01/2013

Step	percent	Apprentice Base Wage	Health	Pension	Supplemental Unemployment	Total Rate
1	50	$17.96	$7.80	$0.00	$0.00	$25.76
2	55	$19.75	$7.80	$3.52	$0.00	$31.07
3	60	$21.55	$7.80	$3.84	$0.00	$33.19
4	65	$23.34	$7.80	$4.16	$0.00	$35.30
5	70	$25.14	$7.80	$13.68	$0.00	$46.62
6	75	$26.93	$7.80	$14.00	$0.00	$48.73
7	80	$28.73	$7.80	$14.32	$0.00	$50.85
8	90	$32.32	$7.80	$14.96	$0.00	$55.08

Notes:

Apprentice to Journeyworker Ratio:1:1

PAINTER (SPRAY OR SANDBLAST, REPAINT)	01/01/2013	$33.97	$7.80	$15.60	$0.00	$57.37

PAINTERS LOCAL 35 - ZONE 2

Classification	Effective Date	Base Wage	Health	Pension	Supplemental Unemployment	Total Rate

Apprentice - *PAINTER Local 35 Zone 2 - Spray/Sandblast - Repaint*

Effective Date - 01/01/2013

Step	percent	Apprentice Base Wage	Health	Pension	Supplemental Unemployment	Total Rate
1	50	$16.99	$7.80	$0.00	$0.00	$24.79
2	55	$18.68	$7.80	$3.52	$0.00	$30.00
3	60	$20.38	$7.80	$3.84	$0.00	$32.02
4	65	$22.08	$7.80	$4.16	$0.00	$34.04
5	70	$23.78	$7.80	$13.68	$0.00	$45.26
6	75	$25.48	$7.80	$14.00	$0.00	$47.28
7	80	$27.18	$7.80	$14.32	$0.00	$49.30
8	90	$30.57	$7.80	$14.96	$0.00	$53.33

Notes:

Apprentice to Journeyworker Ratio:1:1

PAINTER (TRAFFIC MARKINGS) *LABORERS - ZONE 1*	12/01/2012	$32.30	$7.10	$12.45	$0.00	$51.85
	06/01/2013	$33.05	$7.10	$12.45	$0.00	$52.60
	12/01/2013	$33.80	$7.10	$12.45	$0.00	$53.35
	06/01/2014	$34.55	$7.10	$12.45	$0.00	$54.10
	12/01/2014	$35.30	$7.10	$12.45	$0.00	$54.85
	06/01/2015	$36.05	$7.10	$12.45	$0.00	$55.60
	12/01/2015	$36.80	$7.10	$12.45	$0.00	$56.35
	06/01/2016	$37.55	$7.10	$12.45	$0.00	$57.10
	12/01/2016	$38.55	$7.10	$12.45	$0.00	$58.10
For Apprentice rates see "Apprentice- LABORER"						
PAINTER / TAPER (BRUSH, NEW) * * If 30% or more of surfaces to be painted are new construction, NEW paint rate shall be used.*PAINTERS LOCAL 35 - ZONE 2*	01/01/2013	$34.51	$7.80	$15.60	$0.00	$57.91

Classification	Effective Date	Base Wage	Health	Pension	Supplemental Unemployment	Total Rate

Apprentice - *PAINTER - Local 35 Zone 2 - BRUSH NEW*

Effective Date - 01/01/2013

Step	percent	Apprentice Base Wage	Health	Pension	Supplemental Unemployment	Total Rate
1	50	$17.26	$7.80	$0.00	$0.00	$25.06
2	55	$18.98	$7.80	$3.52	$0.00	$30.30
3	60	$20.71	$7.80	$3.84	$0.00	$32.35
4	65	$22.43	$7.80	$4.16	$0.00	$34.39
5	70	$24.16	$7.80	$13.68	$0.00	$45.64
6	75	$25.88	$7.80	$14.00	$0.00	$47.68
7	80	$27.61	$7.80	$14.32	$0.00	$49.73
8	90	$31.06	$7.80	$14.96	$0.00	$53.82

Notes:
Steps are 750 hrs.

Apprentice to Journeyworker Ratio:1:1

PAINTER / TAPER (BRUSH, REPAINT) *PAINTERS LOCAL 35 - ZONE 2*	01/01/2013	$32.57	$7.80	$15.60	$0.00	$55.97

Apprentice - *PAINTER Local 35 Zone 2 - BRUSH REPAINT*

Effective Date - 01/01/2013

Step	percent	Apprentice Base Wage	Health	Pension	Supplemental Unemployment	Total Rate
1	50	$16.29	$7.80	$0.00	$0.00	$24.09
2	55	$17.91	$7.80	$3.52	$0.00	$29.23
3	60	$19.54	$7.80	$3.84	$0.00	$31.18
4	65	$21.17	$7.80	$4.16	$0.00	$33.13
5	70	$22.80	$7.80	$13.68	$0.00	$44.28
6	75	$24.43	$7.80	$14.00	$0.00	$46.23
7	80	$26.06	$7.80	$14.32	$0.00	$48.18
8	90	$29.31	$7.80	$14.96	$0.00	$52.07

Notes:
Steps are 750 hrs.

Apprentice to Journeyworker Ratio:1:1

PANEL & PICKUP TRUCKS DRIVER *TEAMSTERS JOINT COUNCIL NO. 10 ZONE A*	12/01/2012	$31.38	$8.91	$8.00	$0.00	$48.29
PIER AND DOCK CONSTRUCTOR (UNDERPINNING AND DECK) *PILE DRIVER LOCAL 56 (ZONE 1)*	08/01/2012	$39.20	$9.80	$17.67	$0.00	$66.67
	08/01/2013	$40.70	$9.80	$17.67	$0.00	$68.17
	08/01/2014	$42.20	$9.80	$17.67	$0.00	$69.67
	08/01/2015	$43.70	$9.80	$17.67	$0.00	$71.17

Classification	Effective Date	Base Wage	Health	Pension	Supplemental Unemployment	Total Rate
PILE DRIVER *PILE DRIVER LOCAL 56 (ZONE 1)*	08/01/2012	$39.20	$9.80	$17.67	$0.00	$66.67
	08/01/2013	$40.70	$9.80	$17.67	$0.00	$68.17
	08/01/2014	$42.20	$9.80	$17.67	$0.00	$69.67
	08/01/2015	$43.70	$9.80	$17.67	$0.00	$71.17

Apprentice - *PILE DRIVER - Local 56 Zone 1*

Effective Date - 08/01/2012

Step	percent	Apprentice Base Wage	Health	Pension	Supplemental Unemployment	Total Rate
1	50	$19.60	$9.80	$17.67	$0.00	$47.07
2	60	$23.52	$9.80	$17.67	$0.00	$50.99
3	70	$27.44	$9.80	$17.67	$0.00	$54.91
4	75	$29.40	$9.80	$17.67	$0.00	$56.87
5	80	$31.36	$9.80	$17.67	$0.00	$58.83
6	80	$31.36	$9.80	$17.67	$0.00	$58.83
7	90	$35.28	$9.80	$17.67	$0.00	$62.75
8	90	$35.28	$9.80	$17.67	$0.00	$62.75

Effective Date - 08/01/2013

Step	percent	Apprentice Base Wage	Health	Pension	Supplemental Unemployment	Total Rate
1	50	$20.35	$9.80	$17.67	$0.00	$47.82
2	60	$24.42	$9.80	$17.67	$0.00	$51.89
3	70	$28.49	$9.80	$17.67	$0.00	$55.96
4	75	$30.53	$9.80	$17.67	$0.00	$58.00
5	80	$32.56	$9.80	$17.67	$0.00	$60.03
6	80	$32.56	$9.80	$17.67	$0.00	$60.03
7	90	$36.63	$9.80	$17.67	$0.00	$64.10
8	90	$36.63	$9.80	$17.67	$0.00	$64.10

Notes:

Apprentice to Journeyworker Ratio:1:3

PIPEFITTER & STEAMFITTER *PIPEFITTERS LOCAL 537*	03/01/2013	$49.34	$8.75	$14.39	$0.00	$72.48

Classification	Effective Date	Base Wage	Health	Pension	Supplemental Unemployment	Total Rate

Apprentice - *PIPEFITTER - Local 537*

Effective Date - 03/01/2013

Step	percent	Apprentice Base Wage	Health	Pension	Supplemental Unemployment	Total Rate
1	40	$19.74	$8.75	$6.50	$0.00	$34.99
2	45	$22.20	$8.75	$14.39	$0.00	$45.34
3	60	$29.60	$8.75	$14.39	$0.00	$52.74
4	70	$34.54	$8.75	$14.39	$0.00	$57.68
5	80	$39.47	$8.75	$14.39	$0.00	$62.61

Notes:

** 1:3; 3:15; 1:10 thereafter / Steps are 1 yr.
Refrig/AC Mechanic **1:1;1:2;2:4;3:6;4:8;5:10;6:12;7:14;8:17;9:20;10:23(Max)

Apprentice to Journeyworker Ratio:**

PIPELAYER *LABORERS - ZONE 1*	12/01/2012	$32.55	$7.10	$12.45	$0.00	$52.10
	06/01/2013	$33.30	$7.10	$12.45	$0.00	$52.85
	12/01/2013	$34.05	$7.10	$12.45	$0.00	$53.60
	06/01/2014	$34.80	$7.10	$12.45	$0.00	$54.35
	12/01/2014	$35.55	$7.10	$12.45	$0.00	$55.10
	06/01/2015	$36.30	$7.10	$12.45	$0.00	$55.85
	12/01/2015	$37.05	$7.10	$12.45	$0.00	$56.60
	06/01/2016	$37.80	$7.10	$12.45	$0.00	$57.35
	12/01/2016	$38.80	$7.10	$12.45	$0.00	$58.35

For apprentice rates see "Apprentice- LABORER"

PLUMBERS & GASFITTERS *PLUMBERS & GASFITTERS LOCAL 12*	03/01/2013	$49.31	$9.32	$13.29	$0.00	$71.92

Apprentice - *PLUMBER/GASFITTER - Local 12*

Effective Date - 03/01/2013

Step	percent	Apprentice Base Wage	Health	Pension	Supplemental Unemployment	Total Rate
1	35	$17.26	$9.32	$4.97	$0.00	$31.55
2	40	$19.72	$9.32	$5.61	$0.00	$34.65
3	55	$27.12	$9.32	$7.53	$0.00	$43.97
4	65	$32.05	$9.32	$8.81	$0.00	$50.18
5	75	$36.98	$9.32	$10.09	$0.00	$56.39

Notes:

** 1:2; 2:6; 3:10; 4:14; 5:19/Steps are 1 yr
Step4 with lic$53.29 Step5 with lic$59.49

Apprentice to Journeyworker Ratio:**

PNEUMATIC CONTROLS (TEMP.) *PIPEFITTERS LOCAL 537*	03/01/2013	$49.34	$8.75	$14.39	$0.00	$72.48

For apprentice rates see "Apprentice- PIPEFITTER" or "PLUMBER/PIPEFITTER"

Classification	Effective Date	Base Wage	Health	Pension	Supplemental Unemployment	Total Rate
PNEUMATIC DRILL/TOOL OPERATOR *LABORERS - ZONE 1*	12/01/2012	$32.55	$7.10	$12.45	$0.00	$52.10
	06/01/2013	$33.30	$7.10	$12.45	$0.00	$52.85
	12/01/2013	$34.05	$7.10	$12.45	$0.00	$53.60
	06/01/2014	$34.80	$7.10	$12.45	$0.00	$54.35
	12/01/2014	$35.55	$7.10	$12.45	$0.00	$55.10
	06/01/2015	$36.30	$7.10	$12.45	$0.00	$55.85
	12/01/2015	$37.05	$7.10	$12.45	$0.00	$56.60
	06/01/2016	$37.80	$7.10	$12.45	$0.00	$57.35
	12/01/2016	$38.80	$7.10	$12.45	$0.00	$58.35
For apprentice rates see "Apprentice- LABORER"						
POWDERMAN & BLASTER *LABORERS - ZONE 1*	12/01/2012	$33.30	$7.10	$12.45	$0.00	$52.85
	06/01/2013	$34.05	$7.10	$12.45	$0.00	$53.60
	12/01/2013	$34.80	$7.10	$12.45	$0.00	$54.35
	06/01/2014	$35.55	$7.10	$12.45	$0.00	$55.10
	12/01/2014	$36.30	$7.10	$12.45	$0.00	$55.85
	06/01/2015	$37.05	$7.10	$12.45	$0.00	$56.60
	12/01/2015	$37.80	$7.10	$12.45	$0.00	$57.35
	06/01/2016	$38.55	$7.10	$12.45	$0.00	$58.10
	12/01/2016	$39.55	$7.10	$12.45	$0.00	$59.10
For apprentice rates see "Apprentice- LABORER"						
POWER SHOVEL/DERRICK/TRENCHING MACHINE *OPERATING ENGINEERS LOCAL 4*	12/01/2012	$40.09	$10.00	$13.02	$0.00	$63.11
	06/01/2013	$40.87	$10.00	$13.02	$0.00	$63.89
	12/01/2013	$41.65	$10.00	$13.02	$0.00	$64.67
For apprentice rates see "Apprentice- OPERATING ENGINEERS"						
PUMP OPERATOR (CONCRETE) *OPERATING ENGINEERS LOCAL 4*	12/01/2012	$40.09	$10.00	$13.02	$0.00	$63.11
	06/01/2013	$40.87	$10.00	$13.02	$0.00	$63.89
	12/01/2013	$41.65	$10.00	$13.02	$0.00	$64.67
For apprentice rates see "Apprentice- OPERATING ENGINEERS"						
PUMP OPERATOR (DEWATERING, OTHER) *OPERATING ENGINEERS LOCAL 4*	12/01/2012	$28.17	$10.00	$13.02	$0.00	$51.19
	06/01/2013	$28.72	$10.00	$13.02	$0.00	$51.74
	12/01/2013	$29.27	$10.00	$13.02	$0.00	$52.29
For apprentice rates see "Apprentice- OPERATING ENGINEERS"						
READY-MIX CONCRETE DRIVER *TEAMSTERS LOCAL 25b*	05/01/2011	$28.03	$7.75	$5.91	$0.00	$41.69
RECLAIMERS *OPERATING ENGINEERS LOCAL 4*	12/01/2012	$39.72	$10.00	$13.02	$0.00	$62.74
	06/01/2013	$40.49	$10.00	$13.02	$0.00	$63.51
	12/01/2013	$41.27	$10.00	$13.02	$0.00	$64.29
For apprentice rates see "Apprentice- OPERATING ENGINEERS"						
RESIDENTIAL WOOD FRAME (All Other Work) *CARPENTERS -ZONE 2 (Residential Wood)*	04/01/2011	$24.24	$8.67	$15.51	$0.00	$48.42
RESIDENTIAL WOOD FRAME CARPENTER ** ** The Residential Wood Frame Carpenter classification applies only to the construction of new, wood frame residences that do not exceed four stories including the basement.*CARPENTERS -ZONE 2 (Residential Wood)*	05/01/2011	$24.24	$6.34	$6.23	$0.00	$36.81

As of 9/1/09 Carpentry work on wood-frame residential WEATHERIZATION projects shall be paid the RESIDENTIAL WOOD FRAME CARPENTER rate.

Classification	Effective Date	Base Wage	Health	Pension	Supplemental Unemployment	Total Rate
RIDE-ON MOTORIZED BUGGY OPERATOR *LABORERS - ZONE 1*	12/01/2012	$32.55	$7.10	$12.45	$0.00	$52.10
	06/01/2013	$33.30	$7.10	$12.45	$0.00	$52.85
	12/01/2013	$34.05	$7.10	$12.45	$0.00	$53.60
	06/01/2014	$34.80	$7.10	$12.45	$0.00	$54.35
	12/01/2014	$35.55	$7.10	$12.45	$0.00	$55.10
	06/01/2015	$36.30	$7.10	$12.45	$0.00	$55.85
	12/01/2015	$37.05	$7.10	$12.45	$0.00	$56.60
	06/01/2016	$37.80	$7.10	$12.45	$0.00	$57.35
	12/01/2016	$38.80	$7.10	$12.45	$0.00	$58.35
For apprentice rates see "Apprentice- LABORER"						
ROLLER/SPREADER/MULCHING MACHINE *OPERATING ENGINEERS LOCAL 4*	12/01/2012	$39.72	$10.00	$13.02	$0.00	$62.74
	06/01/2013	$40.49	$10.00	$13.02	$0.00	$63.51
	12/01/2013	$41.27	$10.00	$13.02	$0.00	$64.29
For apprentice rates see "Apprentice- OPERATING ENGINEERS"						
ROOFER (Inc.Roofer Waterproofng &Roofer Damproofg) *ROOFERS LOCAL 33*	02/01/2013	$37.41	$10.50	$10.70	$0.00	$58.61

Apprentice - *ROOFER - Local 33*

Effective Date - 02/01/2013

Step	percent	Apprentice Base Wage	Health	Pension	Supplemental Unemployment	Total Rate
1	50	$18.71	$10.50	$3.38	$0.00	$32.59
2	60	$22.45	$10.50	$10.70	$0.00	$43.65
3	65	$24.32	$10.50	$10.70	$0.00	$45.52
4	75	$28.06	$10.50	$10.70	$0.00	$49.26
5	85	$31.80	$10.50	$10.70	$0.00	$53.00

Notes: ** 1:5, 2:6-10, the 1:10; Reroofing: 1:4, then 1:1
Step 1 is 2000 hrs.; Steps 2-5 are 1000 hrs.

Apprentice to Journeyworker Ratio:**

ROOFER SLATE / TILE / PRECAST CONCRETE *ROOFERS LOCAL 33*	02/01/2013	$37.66	$10.50	$10.70	$0.00	$58.86
For apprentice rates see "Apprentice- ROOFER"						
SHEETMETAL WORKER *SHEETMETAL WORKERS LOCAL 17 - A*	02/01/2013	$42.32	$9.82	$18.24	$2.11	$72.49

Classification	Effective Date	Base Wage	Health	Pension	Supplemental Unemployment	Total Rate

Apprentice - *SHEET METAL WORKER - Local 17-A*

Effective Date - 02/01/2013

Step	percent	Apprentice Base Wage	Health	Pension	Supplemental Unemployment	Total Rate
1	40	$16.93	$9.82	$4.00	$0.00	$30.75
2	40	$16.93	$9.82	$4.00	$0.00	$30.75
3	45	$19.04	$9.82	$8.00	$1.11	$37.97
4	45	$19.04	$9.82	$8.00	$1.11	$37.97
5	50	$21.16	$9.82	$8.75	$1.19	$40.92
6	50	$21.16	$9.82	$9.00	$1.20	$41.18
7	60	$25.39	$9.82	$10.24	$1.36	$46.81
8	65	$27.51	$9.82	$10.99	$1.45	$49.77
9	75	$31.74	$9.82	$12.49	$1.62	$55.67
10	85	$35.97	$9.82	$13.49	$1.78	$61.06

Notes:

Steps are 6 mos.

Apprentice to Journeyworker Ratio:1:4

SIGN ERECTOR *PAINTERS LOCAL 35 - ZONE 2*	06/01/2012	$25.37	$6.82	$6.85	$0.00	$39.04
	06/01/2013	$25.81	$7.07	$7.05	$0.00	$39.93

Classification	Effective Date	Base Wage	Health	Pension	Supplemental Unemployment	Total Rate

Apprentice - *SIGN ERECTOR - Local 35 Zone 2*

Effective Date - 06/01/2012

Step	percent	Apprentice Base Wage	Health	Pension	Supplemental Unemployment	Total Rate
1	50	$12.69	$6.82	$0.00	$0.00	$19.51
2	55	$13.95	$6.82	$2.35	$0.00	$23.12
3	60	$15.22	$6.82	$2.35	$0.00	$24.39
4	65	$16.49	$6.82	$2.35	$0.00	$25.66
5	70	$17.76	$6.82	$6.85	$0.00	$31.43
6	75	$19.03	$6.82	$6.85	$0.00	$32.70
7	80	$20.30	$6.82	$6.85	$0.00	$33.97
8	85	$21.56	$6.82	$6.85	$0.00	$35.23
9	90	$22.83	$6.82	$6.85	$0.00	$36.50

Effective Date - 06/01/2013

Step	percent	Apprentice Base Wage	Health	Pension	Supplemental Unemployment	Total Rate
1	50	$12.91	$7.07	$0.00	$0.00	$19.98
2	55	$14.20	$7.07	$2.45	$0.00	$23.72
3	60	$15.49	$7.07	$2.45	$0.00	$25.01
4	65	$16.78	$7.07	$2.45	$0.00	$26.30
5	70	$18.07	$7.07	$7.05	$0.00	$32.19
6	75	$19.36	$7.07	$7.05	$0.00	$33.48
7	80	$20.65	$7.07	$7.05	$0.00	$34.77
8	85	$21.94	$7.07	$7.05	$0.00	$36.06
9	90	$23.23	$7.07	$7.05	$0.00	$37.35

Notes:

Steps are 4 mos.

Apprentice to Journeyworker Ratio:1:1

SPECIALIZED EARTH MOVING EQUIP < 35 TONS *TEAMSTERS JOINT COUNCIL NO. 10 ZONE A*	12/01/2012	$31.84	$8.91	$8.00	$0.00	$48.75
SPECIALIZED EARTH MOVING EQUIP > 35 TONS *TEAMSTERS JOINT COUNCIL NO. 10 ZONE A*	12/01/2012	$32.13	$8.91	$8.00	$0.00	$49.04
SPRINKLER FITTER *SPRINKLER FITTERS LOCAL 550 - (Section A)*	03/01/2013	$52.58	$8.42	$12.60	$0.00	$73.60

Classification	Effective Date	Base Wage	Health	Pension	Supplemental Unemployment	Total Rate

Apprentice - *SPRINKLER FITTER - Local 550*

Effective Date - 03/01/2013

Step	percent	Apprentice Base Wage	Health	Pension	Supplemental Unemployment	Total Rate
1	35	$18.40	$8.42	$8.00	$0.00	$34.82
2	40	$21.03	$8.42	$8.00	$0.00	$37.45
3	45	$23.66	$8.42	$8.00	$0.00	$40.08
4	50	$26.29	$8.42	$8.00	$0.00	$42.71
5	55	$28.92	$8.42	$8.00	$0.00	$45.34
6	60	$31.55	$8.42	$8.00	$0.00	$47.97
7	65	$34.18	$8.42	$8.00	$0.00	$50.60
8	70	$36.81	$8.42	$8.00	$0.00	$53.23
9	75	$39.44	$8.42	$8.00	$0.00	$55.86
10	80	$42.06	$8.42	$8.00	$0.00	$58.48

Notes:

Steps are 850 hours

Apprentice to Journeyworker Ratio:1:1

STEAM BOILER OPERATOR *OPERATING ENGINEERS LOCAL 4*	12/01/2012	$39.72	$10.00	$13.02	$0.00	$62.74
	06/01/2013	$40.49	$10.00	$13.02	$0.00	$63.51
	12/01/2013	$41.27	$10.00	$13.02	$0.00	$64.29
For apprentice rates see "Apprentice- OPERATING ENGINEERS"						
TAMPERS, SELF-PROPELLED OR TRACTOR DRAWN *OPERATING ENGINEERS LOCAL 4*	12/01/2012	$39.72	$10.00	$13.02	$0.00	$62.74
	06/01/2013	$40.49	$10.00	$13.02	$0.00	$63.51
	12/01/2013	$41.27	$10.00	$13.02	$0.00	$64.29
For apprentice rates see "Apprentice- OPERATING ENGINEERS"						
TELECOMMUNICATION TECHNICIAN *ELECTRICIANS LOCAL 103*	03/01/2013	$32.64	$13.00	$12.51	$0.00	$58.15
	09/01/2013	$33.15	$13.00	$12.52	$0.00	$58.67
	03/01/2014	$33.69	$13.00	$12.54	$0.00	$59.23
	09/01/2014	$34.20	$13.00	$12.56	$0.00	$59.76
	03/01/2015	$34.74	$13.00	$12.57	$0.00	$60.31
	09/01/2015	$35.45	$13.00	$12.59	$0.00	$61.04
	03/01/2016	$36.17	$13.00	$12.62	$0.00	$61.79

Classification	Effective Date	Base Wage	Health	Pension	Supplemental Unemployment	Total Rate

Apprentice - *TELECOMMUNICATION TECHNICIAN - Local 103*

Effective Date - 03/01/2013

Step	percent	Apprentice Base Wage	Health	Pension	Supplemental Unemployment	Total Rate
1	40	$13.06	$13.00	$0.39	$0.00	$26.45
2	40	$13.06	$13.00	$0.39	$0.00	$26.45
3	45	$14.69	$13.00	$10.77	$0.00	$38.46
4	45	$14.69	$13.00	$10.77	$0.00	$38.46
5	50	$16.32	$13.00	$11.02	$0.00	$40.34
6	55	$17.95	$13.00	$11.27	$0.00	$42.22
7	60	$19.58	$13.00	$11.52	$0.00	$44.10
8	65	$21.22	$13.00	$11.77	$0.00	$45.99
9	70	$22.85	$13.00	$12.02	$0.00	$47.87
10	75	$24.48	$13.00	$12.26	$0.00	$49.74

Effective Date - 09/01/2013

Step	percent	Apprentice Base Wage	Health	Pension	Supplemental Unemployment	Total Rate
1	40	$13.26	$13.00	$0.40	$0.00	$26.66
2	40	$13.26	$13.00	$0.40	$0.00	$26.66
3	45	$14.92	$13.00	$9.79	$0.00	$37.71
4	45	$14.92	$13.00	$9.79	$0.00	$37.71
5	50	$16.58	$13.00	$10.04	$0.00	$39.62
6	55	$18.23	$13.00	$10.29	$0.00	$41.52
7	60	$19.89	$13.00	$10.54	$0.00	$43.43
8	65	$21.55	$13.00	$10.79	$0.00	$45.34
9	70	$23.21	$13.00	$11.04	$0.00	$47.25
10	75	$24.86	$13.00	$11.29	$0.00	$49.15

Notes:

Apprentice to Journeyworker Ratio:1:1

TERRAZZO FINISHERS *BRICKLAYERS LOCAL 3 - MARBLE & TILE*	02/01/2013	$46.35	$10.18	$17.83	$0.00	$74.36
	08/01/2013	$47.25	$10.18	$17.90	$0.00	$75.33
	02/01/2014	$47.81	$10.18	$17.90	$0.00	$75.89
	08/01/2014	$48.71	$10.18	$17.97	$0.00	$76.86
	02/01/2015	$49.27	$10.18	$17.97	$0.00	$77.42
	08/01/2015	$50.17	$10.18	$18.04	$0.00	$78.39
	02/01/2016	$50.74	$10.18	$18.04	$0.00	$78.96
	08/01/2016	$51.64	$10.18	$18.12	$0.00	$79.94
	02/01/2017	$52.21	$10.18	$18.12	$0.00	$80.51

Classification	Effective Date	Base Wage	Health	Pension	Supplemental Unemployment	Total Rate

Apprentice - *TERRAZZO FINISHER - Local 3 Marble & Tile*

Effective Date - 02/01/2013

Step	percent	Apprentice Base Wage	Health	Pension	Supplemental Unemployment	Total Rate
1	50	$23.18	$10.18	$17.83	$0.00	$51.19
2	60	$27.81	$10.18	$17.83	$0.00	$55.82
3	70	$32.45	$10.18	$17.83	$0.00	$60.46
4	80	$37.08	$10.18	$17.83	$0.00	$65.09
5	90	$41.72	$10.18	$17.83	$0.00	$69.73

Effective Date - 08/01/2013

Step	percent	Apprentice Base Wage	Health	Pension	Supplemental Unemployment	Total Rate
1	50	$23.63	$10.18	$17.90	$0.00	$51.71
2	60	$28.35	$10.18	$17.90	$0.00	$56.43
3	70	$33.08	$10.18	$17.90	$0.00	$61.16
4	80	$37.80	$10.18	$17.90	$0.00	$65.88
5	90	$42.53	$10.18	$17.90	$0.00	$70.61

Notes:

Apprentice to Journeyworker Ratio:1:3

TEST BORING DRILLER *LABORERS - FOUNDATION AND MARINE*	12/01/2012	$33.70	$7.10	$12.60	$0.00	$53.40
	06/01/2013	$34.45	$7.10	$12.60	$0.00	$54.15
	12/01/2013	$35.20	$7.10	$12.60	$0.00	$54.90
	06/01/2014	$35.95	$7.10	$12.60	$0.00	$55.65
	12/01/2014	$36.70	$7.10	$12.60	$0.00	$56.40
	06/01/2015	$37.45	$7.10	$12.60	$0.00	$57.15
	12/01/2015	$38.20	$7.10	$12.60	$0.00	$57.90
	06/01/2016	$38.95	$7.10	$12.60	$0.00	$58.65
	12/01/2016	$39.95	$7.10	$12.60	$0.00	$59.65

For apprentice rates see "Apprentice- LABORER"

TEST BORING DRILLER HELPER *LABORERS - FOUNDATION AND MARINE*	12/01/2012	$32.42	$7.10	$12.60	$0.00	$52.12
	06/01/2013	$33.17	$7.10	$12.60	$0.00	$52.87
	12/01/2013	$33.92	$7.10	$12.60	$0.00	$53.62
	06/01/2014	$34.67	$7.10	$12.60	$0.00	$54.37
	12/01/2014	$35.42	$7.10	$12.60	$0.00	$55.12
	06/01/2015	$36.17	$7.10	$12.60	$0.00	$55.87
	12/01/2015	$36.92	$7.10	$12.60	$0.00	$56.62
	06/01/2016	$37.67	$7.10	$12.60	$0.00	$57.37
	12/01/2016	$38.67	$7.10	$12.60	$0.00	$58.37

For apprentice rates see "Apprentice- LABORER"

Classification	Effective Date	Base Wage	Health	Pension	Supplemental Unemployment	Total Rate
TEST BORING LABORER *LABORERS - FOUNDATION AND MARINE*	12/01/2012	$32.30	$7.10	$12.60	$0.00	$52.00
	06/01/2013	$33.05	$7.10	$12.60	$0.00	$52.75
	12/01/2013	$33.80	$7.10	$12.60	$0.00	$53.50
	06/01/2014	$34.55	$7.10	$12.60	$0.00	$54.25
	12/01/2014	$35.30	$7.10	$12.60	$0.00	$55.00
	06/01/2015	$36.05	$7.10	$12.60	$0.00	$55.75
	12/01/2015	$36.80	$7.10	$12.60	$0.00	$56.50
	06/01/2016	$37.55	$7.10	$12.60	$0.00	$57.25
	12/01/2016	$38.55	$7.10	$12.60	$0.00	$58.25
For apprentice rates see "Apprentice- LABORER"						
TRACTORS/PORTABLE STEAM GENERATORS *OPERATING ENGINEERS LOCAL 4*	12/01/2012	$39.72	$10.00	$13.02	$0.00	$62.74
	06/01/2013	$40.49	$10.00	$13.02	$0.00	$63.51
	12/01/2013	$41.27	$10.00	$13.02	$0.00	$64.29
For apprentice rates see "Apprentice- OPERATING ENGINEERS"						
TRAILERS FOR EARTH MOVING EQUIPMENT *TEAMSTERS JOINT COUNCIL NO. 10 ZONE A*	12/01/2012	$32.42	$9.07	$8.00	$0.00	$49.49
TUNNEL WORK - COMPRESSED AIR *LABORERS (COMPRESSED AIR)*	12/01/2012	$44.58	$7.10	$13.00	$0.00	$64.68
	06/01/2013	$45.33	$7.10	$13.00	$0.00	$65.43
	12/01/2013	$46.08	$7.10	$13.00	$0.00	$66.18
	06/01/2014	$46.83	$7.10	$13.00	$0.00	$66.93
	12/01/2014	$47.58	$7.10	$13.00	$0.00	$67.68
	06/01/2015	$48.33	$7.10	$13.00	$0.00	$68.43
	12/01/2015	$49.08	$7.10	$13.00	$0.00	$69.18
	06/01/2016	$49.83	$7.10	$13.00	$0.00	$69.93
	12/01/2016	$50.83	$7.10	$13.00	$0.00	$70.93
For apprentice rates see "Apprentice- LABORER"						
TUNNEL WORK - COMPRESSED AIR (HAZ. WASTE) *LABORERS (COMPRESSED AIR)*	12/01/2012	$46.58	$7.10	$13.00	$0.00	$66.68
	06/01/2013	$47.33	$7.10	$13.00	$0.00	$67.43
	12/01/2013	$48.08	$7.10	$13.00	$0.00	$68.18
	06/01/2014	$48.83	$7.10	$13.00	$0.00	$68.93
	12/01/2014	$49.58	$7.10	$13.00	$0.00	$69.68
	06/01/2015	$50.33	$7.10	$13.00	$0.00	$70.43
	12/01/2015	$51.08	$7.10	$13.00	$0.00	$71.18
	06/01/2016	$51.83	$7.10	$13.00	$0.00	$71.93
	12/01/2016	$52.83	$7.10	$13.00	$0.00	$72.93
For apprentice rates see "Apprentice- LABORER"						
TUNNEL WORK - FREE AIR *LABORERS (FREE AIR TUNNEL)*	12/01/2012	$36.65	$7.10	$13.00	$0.00	$56.75
	06/01/2013	$37.40	$7.10	$13.00	$0.00	$57.50
	12/01/2013	$38.15	$7.10	$13.00	$0.00	$58.25
	06/01/2014	$38.90	$7.10	$13.00	$0.00	$59.00
	12/01/2014	$39.65	$7.10	$13.00	$0.00	$59.75
	06/01/2015	$40.40	$7.10	$13.00	$0.00	$60.50
	12/01/2015	$41.15	$7.10	$13.00	$0.00	$61.25
	06/01/2016	$41.90	$7.10	$13.00	$0.00	$62.00
	12/01/2016	$42.90	$7.10	$13.00	$0.00	$63.00
For apprentice rates see "Apprentice- LABORER"						

Classification	Effective Date	Base Wage	Health	Pension	Supplemental Unemployment	Total Rate
TUNNEL WORK - FREE AIR (HAZ. WASTE) *LABORERS (FREE AIR TUNNEL)*	12/01/2012	$38.65	$7.10	$13.00	$0.00	$58.75
	06/01/2013	$39.40	$7.10	$13.00	$0.00	$59.50
	12/01/2013	$40.15	$7.10	$13.00	$0.00	$60.25
	06/01/2014	$40.90	$7.10	$13.00	$0.00	$61.00
	12/01/2014	$41.65	$7.10	$13.00	$0.00	$61.75
	06/01/2015	$42.40	$7.10	$13.00	$0.00	$62.50
	12/01/2015	$43.15	$7.10	$13.00	$0.00	$63.25
	06/01/2016	$43.90	$7.10	$13.00	$0.00	$64.00
	12/01/2016	$44.90	$7.10	$13.00	$0.00	$65.00
For apprentice rates see "Apprentice- LABORER"						
VAC-HAUL *TEAMSTERS JOINT COUNCIL NO. 10 ZONE A*	12/01/2012	$31.84	$8.91	$8.00	$0.00	$48.75
WAGON DRILL OPERATOR *LABORERS - ZONE 1*	12/01/2012	$32.55	$7.10	$12.45	$0.00	$52.10
	06/01/2013	$33.30	$7.10	$12.45	$0.00	$52.85
	12/01/2013	$34.05	$7.10	$12.45	$0.00	$53.60
	06/01/2014	$34.80	$7.10	$12.45	$0.00	$54.35
	12/01/2014	$35.55	$7.10	$12.45	$0.00	$55.10
	06/01/2015	$36.30	$7.10	$12.45	$0.00	$55.85
	12/01/2015	$37.05	$7.10	$12.45	$0.00	$56.60
	06/01/2016	$37.80	$7.10	$12.45	$0.00	$57.35
	12/01/2016	$38.80	$7.10	$12.45	$0.00	$58.35
For apprentice rates see "Apprentice- LABORER"						
WASTE WATER PUMP OPERATOR *OPERATING ENGINEERS LOCAL 4*	12/01/2012	$40.09	$10.00	$13.02	$0.00	$63.11
	06/01/2013	$40.87	$10.00	$13.02	$0.00	$63.89
	12/01/2013	$41.65	$10.00	$13.02	$0.00	$64.67
For apprentice rates see "Apprentice- OPERATING ENGINEERS"						
WATER METER INSTALLER *PLUMBERS & GASFITTERS LOCAL 12*	03/01/2013	$49.31	$9.32	$13.29	$0.00	$71.92
For apprentice rates see "Apprentice- PLUMBER/PIPEFITTER" or "PLUMBER/GASFITTER"						

Additional Apprentice Information:

Minimum wage rates for apprentices employed on public works projects are listed above as a percentage of the pre-determined hourly wage rate established by the Commissioner under the provisions of the M.G.L. c. 149, ss. 26-27D. Apprentice ratios are established by the Division of Apprenticeship Training pursuant to M.G.L. c. 23, ss. 11E-11L.

All apprentices must be registered with the Division of Apprenticeship Training in accordance with M.G.L. c. 23, ss. 11E-11L.

All steps are six months (1000 hours) unless otherwise specified.

* Ratios are expressed in allowable number of apprentices to journeymen or fraction thereof.
** Multiple ratios are listed in the comment field.
*** APP to JM; 1:1, 2:2, 2:3, 3:4, 4:4, 4:5, 4:6, 5:7, 6:7, 6:8, 6:9, 7:10, 8:10, 8:11, 8:12, 9:13, 10:13, 10:14, etc.
**** APP to JM; 1:1, 1:2, 2:3, 2:4, 3:5, 4:6, 4:7, 5:8, 6:9, 6:10, 7:11, 8:12, 8:13, 9:14, 10:15, 10:16, etc.

Section 00890 - Permits

1.01 GENERAL REQUIREMENTS

A The Owner has obtained or will obtain and pay for the permits listed below in Section B, which are required for this project. The Contractor shall assist in obtaining certain permits, as indicated. The Contractor shall obtain, and pay for all other permits required, as defined under the Permits subsection of Section 00700 General Conditions.

B The Contractor shall familiarize itself with the Conditions associated with the Permits listed below, and shall strictly adhere to any conditions listed therein.

1. (**PENDING**)
   Massachusetts Department of Transportation Highway Access Permit.

2. (**PENDING**)
   USACE Section 404 Category 2 Permit, BRP WW10, Major Project Certification – Town Brook Base Flow Recapture Project (Submitted April 17, 2013)

3. (**ISSUED**)
   Final Order of Conditions – Notice of Intent – Town Brook Enhancement Project (May 30, 2012) MassDEP file # 059-1261

4. (**ISSUED**)
   401 Water Quality Certification, BRP WW10, Major Project Certification – Town Brook Enhancement Project (August 31, 2012) MassDEP file # 059-1261

5. (**ISSUED**)
   USACE Section 404 Category 2 Permit, BRP WW10, Major Project Certification – Town Brook Enhancement Project (August 31, 2012) MassDEP file # 059-1261

C As required by the Final Order of Conditions and 401 Water Quality Certification for the Town Brook Enhancement Project, there shall be no construction that results in a discharge of waters to the Town Brook smelt run between March 1st and May 31st, unless otherwise allowed by the Massachusetts Division of Marine Fisheries.

D The Contractor shall perform the work in accordance with the Contract Documents, including any permits/orders and any applicable municipal requirements.

E Permits from the City of Quincy Inspectional Services Department and Engineering Department must be obtained by the Contractor for the work.

END OF SECTION

INTENTIONALLY BLANK

SECTION 011000 SUMMARY OF WORK

1.01 DESCRIPTION

A The project consists of modifications and improvements to the existing storm drainage system in the vicinity of Centre Street at Burgin Parkway, in Quincy, Massachusetts. The work generally includes the construction of storm drainage culverts, manholes, diversion structures, water quality units, re-grading of an existing stormwater detention basin, incidental utility adjustments and as further described in these Contract Documents and as shown on the Project Drawings.

1.02 LOCATION OF WORK

A All work under this contract is located in the City of Quincy, Massachusetts. Work is proposed in Centre Street north of Burgin Parkway within public Right-of-Way, and also within Centre Street south of Burgin Parkway in public Right-of-Way and within easements to the City of Quincy for stormwater and sewer use. Work is proposed adjacent to Crown Colony Drive within the Crown Colony Stormwater Detention Basin and at the outlet of the 72-inch culvert for Town Brook, which are both located on private property.

B Improvements shown on private property may be implemented upon written Consent from the property owner, or as otherwise may be authorized in accordance with the laws of the Commonwealth. The City of Quincy will be responsible for coordination with private property owners to facilitate necessary authorizations to perform the work as described in these Contract Documents and as shown on the Project Drawings.

1.03 SCHEDULE AND OTHER SITE SPECIFIC REQUIREMENTS

A The project construction milestone dates, maintenance of safe streets and sidewalks for vehicular/pedestrian traffic through the project area, safe and unobstructed access to businesses and abutters, public safety measures and site clean-up on a daily basis shall be strictly enforced. No waiver of any one of these requirements shall be allowed. The contractors are urged to study these requirements before submitting bids. Unfamiliarity with the above requirements shall not be accepted as an excuse for lack of performance and/or basis for claims.

B No site work shall be allowed between Thanksgiving Day and March 31 without written permission from the City. During all periods of no construction activity and prior to the project completion, the Contractor shall be fully responsible for maintaining roads/sidewalks, utilities and other public amenities for convenience, safety and safe access to businesses and abutters at all times.

C Work shall be performed in a manned to avoid impact to the surface traffic and site features as well as the traffic and pedestrian operation of Centre Street at the intersection of Burgin Parkway, and Crown Colony Drive at Congress Street.

D No work impacting Town Brook with potential impacts to smelt spawning areas shall occur during the active fish run season, March 1st through June 30th. Construction activities impacting Town Brook shall occur only during low-flow conditions outside the specified date range.

E In addition to being subject to the terms and conditions of the Contract Documents, and the schedule described therein, the work included as shown on the Plans and described in these Contract Documents shall be completed **no later than August 15th, 2013, or 60 Calendar Days from the Notice to Proceed** given by the City, whichever is sooner.

The City and the Contractor recognize that time is of the essence for this Agreement and that the City will suffer financial loss if the Work is not completed within the Contract Time specified in Article 3 of the Agreement, plus any extensions thereof allowed in accordance with Article 12 of the General Conditions. They also recognize the delays, expense and difficulties involved in providing, in a legal or arbitration proceeding, the actual loss suffered by the City if the Work is not completed on time. Accordingly, in accordance with Article 7 of the Agreement, instead of requiring any such proof, the City and the Contractor agree that as liquidated damages for delay (but not as a penalty) the Contractor shall pay the City one thousand two hundred dollars ($ 1,200.00) per day for each calendar day beyond the completion date that work included as shown on the Plans and described in these Contract Documents remains uncompleted.

Provided, that the Contractor shall not be charged with liquidated damages or any excess cost when the delay in completion of the Work is for reasons included in Article 12 of the General Conditions.

Provided further, that the Contractor shall furnish the City the required notification of such delays in accordance with the applicable Conditions of the Contract.

F The Contractor shall assume worst case weather conditions for purposes of determining a bid, and no additional compensation will be allowed for demobilization or mobilization associated with delays due to inclement weather.

G All of the necessary Permits and Owner authorizations must be obtained prior to performing the work described herein.

1.04 WORK TO BE DONE

A The work shall be done in accordance with these Contract Documents and Project Drawings, Construction Standards, the latest edition of American Standard for Nursery Stock, Massachusetts Highway Department Standard Specifications for Highways and Bridges (as applicable) and other approved standards of the Department, the Manual on Uniform Traffic Control Devices, Standard Drawings for Signs and Supports, all as last amended, other standards as referenced in these specifications.

B The work under this Contract consists of furnishing all necessary labor, materials, and equipment and services required for the construction of the Town Brook Base Flow Recapture Project. The work includes, but is not limited to, the construction and installation of storm drainage culverts, manholes, diversion structures, water quality units, milling and pavement overlay, removal and resetting of curbs, re-grading of an existing stormwater detention basin, incidental utility adjustments, various site appurtenances, adjustments and incidental items necessary to complete the work shown on the plans and described in these Contract Documents and as shown on the Project Drawings.

C The work identified in this Scope of Work and the associated drawings, listed on the Site Drawing Index, although separately bound, forms a part of the Contract Documents. The work performed under the Scope of Work shall be subject to the General Conditions, Supplemental Conditions of the Contract and Division 1 General Requirements of the above referenced project.

1.05 COORDINATION

A The Contractor shall coordinate all work with the City of Quincy Planning and Community Development Department, Quincy DPW, Quincy Traffic Department, Quincy Police Department for traffic control and the local school crossing guards. All work shall also be coordinated with the City's resident engineer.

1.06 ABBREVIATIONS AND REFERENCES

A The following abbreviations and references may be used in these specifications.

1. Standard Specifications: Commonwealth of Massachusetts, Department of Transportation, Highway Division, Standard Specifications for Highways and Bridges.

2. Construction Standards: Commonwealth of Massachusetts Department of Public Works Construction Standards.

3. Signs & Supports: Commonwealth of Massachusetts Department of Public Works Standard Drawings for Signs and Supports.

4. MUTCD: Commonwealth of Massachusetts Manual on Uniform Traffic Control Devices.

5. AASHTO: The American Association of State Highway Transportation Officials.

6. ACI: American Concrete Institute.

7. ANSI: American National Standard Institute.

8. ASCE: American Society of Civil Engineers.

9. ASTM: American Society of Testing Methods.

10. AWS: American Welding Society.

11. Fed. Specs: Federal Specifications.

B Where reference is made to a specification by one of the above-referenced or other associations, it is understood that the latest revisions thereof shall apply.

C In case of conflict, these Specifications shall take precedence over the Standards and Specifications noted above.

END OF SECTION

SECTION 011700 SPECIAL PROVISIONS

1.01 GENERAL OBLIGATIONS OF THE CONTRACTOR

A. The Contractor shall submit to the City, within ten (10) days after the execution of the Contract, written proof that the specified materials and equipment required for this project have been ordered and shall be delivered to the site on a specified date.

B. No increase in unit bid prices will be allowed, should the Contractor be delayed in commencing project construction due to the unavailability of specified materials or equipment.

1.02 LIQUIDATED DAMAGES

A. In case the Contractor fails to complete the work satisfactorily on or before the stipulated completion date, the Contractor agrees that the City will deduct from payments due the Contractor each month an amount equal to $1,200.00 for each calendar day in which the Work, as described herein, is not completed after the stipulated time. If payments due the Contractor, and in case such damages exceed the amount of all monies due or to become due the Contractor, the Contractor or its Surety shall pay the balance to the City.

1.03 CHANGE IN THE AMOUNT OF WORK

A. The City reserves the right to delete all or a portion of the Work or to increase or decrease the scope of any item of work to be done under this contract either prior to executing the Contract or at any item during the life of the Contract. Exercise by the City of the above rights shall not constitute any grounds or basis for claims for damages or for loss of anticipated profits.

B. Also, an increase or a decrease of quantity for any bid item, regardless of its magnitude, shall not be regarded as a grounds for an increase or decrease in the contract unit prices, nor on the time allowed for the completion of the Work except as provided for in the Contract.

C. Where a change in design is required by improper construction or is requested by the Contract, the Contractor shall reimburse the City for the costs of such redesign or for the review of the Contractors proposed redesign.

1.04 SEQUENCE OF CONSTRUCTION

A. All work on Saturdays, Sundays and legal holidays and beyond the agreed work hours shall require approval by the Engineer prior to the start of the Work. Work on Saturdays, Sundays and/or legal holidays may be authorized or required by the City or if it is needed to correct an emergency or a dangerous condition.

B. The Contractor shall not be allowed uncontrolled use of public rights of way and amenities. All construction activities within the project area shall be confined to specific sections agreed beforehand in meetings with the Engineer and/or other entities such as area business associations, community

groups or other interested agencies. The Engineer has the right to reschedule the work in a different area as warranted in the best interests of the City, local residents and the general public.

1.05 SITE INVESTIGATIONS

A. The Contractor shall satisfy itself as to the conditions existing within the project area, the type of equipment required to perform the work, the character, quality and quantity of the surface and sub-surface materials to be encountered insofar as this information is reasonably ascertainable from an inspection of the site, as well as from information presented by the drawings, specifications, and other record information.

B. The information presented in the specifications and on the drawings pertaining to the surface and sub-soil conditions, topography or other matters is given to assist the Contractor in properly evaluating the amount, complexity, and character of the work required hereunder. The City assumes no responsibility for the accuracy thereof. Such data is represented as being the best information available.

C. It is understood and agreed that the Contractor, by careful examination, has satisfied itself as to the nature and location of the work, has examined the information (surface and sub-surface) as may be available, understands the character of equipment and facilities needed prior to and during the prosecution of the work, and the general and local conditions that affect the work under this Contract.

D. The City assumes no responsibility for any conclusions or interpretations made by the Contractor on the basis of the information made available by the City. No extra compensation shall be authorized for extra work caused due to the Contractors unfamiliarity with the site and/or the drawings, specifications or the conditions peculiar to the site.

1.06 EXISTING UTILITY LOCATIONS - CONTRACTOR'S RESPONSIBILITY

A. The location of existing underground services and utilities shown on the drawings is based on available records. It is not warranted that all existing utilities and services are shown, or that shown locations are correct. The Contractor shall be responsible for having the utility companies locate their respective utilities on the ground prior to excavating.

B. To satisfy the requirements of Massachusetts law, Chapter 82, Section 40, the Contractor shall, at least 72 hours, exclusive of Saturdays, Sundays and holidays, prior to excavation in the proximity of telephone, gas, cable television and electric utilities, notify the utilities concerned by calling "DIG SAFE" at telephone number 1-888-344-7233 and National Grid Gas Department at (781) 466-6090.

C. The Contractor shall coordinate all work involving utilities and shall satisfy himself as to the existing conditions of the areas in which he is to perform his work. He shall conduct and arrange his work so as not to impede or interfere with the work of other contractors working in the same or adjacent areas.

D. Contractor shall dig exploratory test pits to determine actual locations and configurations of existing underground utilities at key locations prior to construction as directed by the Engineer in accordance with Section 012000 MEASUREMENT AND PAYMENT and the Standard Specifications.

1.07 CONFORMANCE WITH PLANS, SPECIFICATIONS, LINES & GRADES

A. The Contractor shall employ a competent engineer, registered within the state as a Professional Engineer or Land Surveyor. The Contractor shall be responsible for setting all control/base lines, grades, elevations, referenced marks, batter boards, etc. needed by the Contractor during construction. The Contractor shall set or reset, if necessary, at its own expense, such batter boards, additional grade stakes, pins, forms, materials, and labor as may be required.

B. The Contractor shall furnish to the Engineer such assistance as may be needed for checking lines and grades and making other measurements in connection with the Work and/or payments for such work.

C. The Contractor shall be responsible to make all field measurements and check all dimensions necessary for the proper fit and construction of the work called for in the drawings and specifications.

D. For the purposes of observing work that affects their respective properties and/or interests, the City staff and other public agencies shall be permitted access to the work at all times, but all official orders and directives to the Contractor shall be issued by the Engineer.

1.08 PERMITS

A. The Contractor shall obtain all necessary agency permits, not included herein, but required for the execution of certain phases of the project. The Contractor shall fill out all forms and furnish all drawings required to obtain such permits. A copy of the approved permit shall be submitted to the Engineer. All fees associated with these permits shall be considered included in the scope of work.

B. The Contractor shall be responsible for following any issued Orders of Condition applicable to the project as listed in Section 008900 PERMITS.

1.09 PROJECT COMPLETION

A. In order to minimize the disruption of normal activities in the area, all construction within the project limits must be completed in all respects by the completion date stipulated in the Contract. No time extension shall be allowed beyond the completion date specified herein or agreed to subsequently in the pre-construction or other contract meetings. The provisions of this paragraph also apply to all milestone dates for various activities and items of work within the overall project completion schedule.

B. The Contractor must note that failure to complete the work within the period specified may result in a loss to the City, and in this case, the City shall enforce all applicable provisions in the Contract to recover such loss and safeguard its interests.

C. Permitting the Contractor to continue with the work after the time stipulated for its completion has expired, or after the time to which such completion may have been extended has expired, or the making of any payment of the Contractor after such time, shall in no way operate as a waiver on part of the City of any of its rights under this Contract.

1.010 CONTRACTORS RECORDS

A. The Contractor shall comply with Massachusetts General Law, Chapter 30, Section 39R, as explained below:

B. The Contractor shall retain its project records for at least six (6) years after final payment. During this period, the City, the Office of the Inspector General, and the Office of the Attorney General, Division of Labor and Workforce Development shall have the right to inspect these records. The Contractor shall notify the awarding authority of any changes in its bookkeeping and related matters along with a letter from a Certified Public Accountants (CPA). Prior to the execution of the Contract, the Contractor shall file a statement of management and internal accounting controls, which shall be maintained on file together with an annual audited financial statement.

1.011 MANUFACTURER EXPERIENCE

A. For all equipment supplied under this Contract, a manufacturer must have a minimum of five (5) years experience with the product. Equipment not meeting the specified experience/performance history can be considered only if the material supplier/manufacturer is willing to provide an express warranty covering all labor, parts and/or a complete assembly replacement for a period of five (5) years. This warranty shall cover repairs/replacement of defective parts or complete assemblies due to defective workmanship, failure, malfunction and/or substandard performance.

It is the Contractors responsibility to make the manufacturer and/or the vendor award of these regulations.

1.012 MANUFACTURER'S QUALIFICATIONS

A. In addition to requirements for providing services of the Manufacturer's Representative, the manufacturer shall provide trained supervisors to assist in installation of equipment supplied and related appurtenances, to provide initial start-up and to instruct the City personnel in the operation and maintenance of the equipment.

B. Field acceptance tests shall be performed as specified in each section of these specifications.

C. All equipment supplied shall be a manufacturer's standard product with a proven satisfactory operations history and presently in commercial production. All equipment specified with a particular category shall be furnished by a single supplier and shall be products of manufacturers regularly engage in the production of such equipment.

D. Any reference to a specific manufacturer or model number is for the purpose of establishing a quality and performance parameters only and is not to be considered proprietary. Any source or device that has the quality and performance criteria as specified may be acceptable.

E. All equipment, parts, assemblies, and/or appurtenances shall conform to specifications and/or performance requirements in relation to workmanship, materials, installation and equipment.

F. All equipment must meet all local, state, underwriter's laboratories, local utility company standards, and other applicable codes, whether or not called for on the drawings or in these specifications.

G. Wherever the materials to be used are not shown or specified, the use of unspecified materials shall be based on their continuous and successful use and satisfactory performance at the proposed location and similar operating conditions.

H. All materials used within the entire pumping installation shall be compatible (no dissimilar metals), corrosion and abrasion resistant and long lasting for seawater installations, subject to continuous wetting and drying.

1.013 EQUIPMENT WARRANTIES

A. The Contractor shall be responsible for obtaining the manufacturers warranty certifying that the equipment as supplied meets the specifications is of quality construction and is free from defects in material and workmanship.

B. The equipment, apparatus and parts furnished shall be warranted for a period of 5 years, excepting only those items that are normally consumed in service, such as oil, grease, packing, gaskets, O-rings, etc. The equipment manufacturer shall be solely responsible for the warranty of all system components.

C. Components failing to perform as specified, or as represented by the manufacturer, or are proven defective in service during the warranty period, shall be replaced or repaired by the manufacturer at no cost to the City.

D. All equipment delivered to the job is subject to Engineers inspection. Any changes necessary because equipment delivered to this job is not in accordance with approved drawings, shall be removed from the site at the Contractors expense.

1.014 GUARANTEE FOR PLANT MATERIALS

A. Plants shall be guaranteed for a period of one year after written notification of acceptance and shall be alive and in satisfactory growth at the end of the guarantee period.

B. At the end of the guarantee period, a final inspection will be held to determine whether any additional plant material replacements are required. Each plant shall show at least 75% healthy growth and shall have the natural character of its species as determined by the Owner's Representative. Plants found

unacceptable shall be removed promptly from the site and be replaced during the normal planting season, until the plants live through one year.

C. Replacement plants shall have a one year guarantee from time of planting.

1.015 SUBMITTALS AND OPERATIONS/MAINTENANCE MANUALS

A. Whether specifically called for or not, the Contractor shall submit Operation/Maintenance Manuals and technical submittals/shop drawings for all significant items/pieces of equipment to the Engineer, as stipulated under Section 013300 SUBMITTALS.

1.016 PIPE SEPARATION REQUIREMENTS

A. Water main relocation is not required if a water main has a minimum horizontal separation from a new sewer of at least 10-ft. or is above a new sewer with a vertical clearance greater than or equal to 18-inch. Where the vertical clearance is less than 18-inches and an existing water main crosses over or through the proposed new sewer, the water main shall be relocated as shown in the Contract Drawing details. If the sewer crosses over the water main, regardless of the vertical separation, sewer or water pipe shall be concrete encased for a distance of 10 ft. either side of the respective centerline. The use of restrained joints on ductile iron water pipe will be acceptable in lieu of concrete encasement.

1.017 LAWS AND REGULATIONS

A. It is imperative that the Contractor is aware of and enforces all applicable federal, state, local and municipal laws, ordinances and regulations in relation to its employees, the materials used in the work, or the product/equipment performance.

B. If any discrepancy or inconsistency is discovered in the plans, drawings, specifications, or contract documents for the work in relation to any such laws, ordinances, regulations, orders or decrees, the Contractor shall immediately notify Engineer of the conflict and seek its expeditious resolution. The Contractor shall, however, comply with all laws, ordinances, regulations, orders and decrees at all times. The Contractor shall also protect and indemnify the City and its officers, agents, and servants against any claim or liability arising from or based on the violation of any such laws, ordinances, regulations, orders, or decrees, whether by itself or its subcontractors or employees.

C. Each and every provision of law referred to in this section shall be read and enforced as though it were included herein, and if through mistake or otherwise, any such provision is not inserted or if not correctly inserted, then upon the application of either party, the Contract shall forthwith be physically amended to make such insertion.

D. The provision of Chapter 30, Section 39M of the Massachusetts General Laws, as last revised, shall be understood to be a part of this contract.

E. The Contractor shall comply with the requirements of Massachusetts General Law Chapter 353 and the Acts of 1983 as related to Excavations in Public Ways.

F. The Contractor shall enforce all the required safety measures as per AASHTO Guide on Occupational Safety on Highway Construction Projects, sub-part N.1926.550, relating to construction equipment clearances at overhead electric lines.

G. Equipment utilized by the Contractor shall conform to the General Services Administration Construction Noise Specifications as effective on January 1, 1975, for stationary equipment. Equipment must not exceed 75 decibels (A) when measured at a distance of 50 feet from the noise source. The Contractor shall have construction sound enclosures or utilize other noise reduction techniques if the equipment does not meet the noise level requirements. No separate payment shall be made for this item.

H. The Contractor is subject to the requirements of the Clean Air Act, as amended, 42 U.S.C. 1857 et.seg; the Federal Water Pollution Control Act, as amended, 33 U.S.C. 1251 et.seg; and the regulations of the Environmental Protection Agency with respect thereto, as CFR Part 15, as amended from time to time.

I. The Contractor agrees that any facility to be utilized in the performance of any non-exempt contract or sub-contract shall not be listed on the List of Violating Facilities issued by the Environmental Protection Agency (EPA) pursuant to 40CFR 15.20.

J. The Contractor agrees to comply with all the requirements of Section 114 of the Clean Air Act, as amended (42 U.S.C. 1857c8) and Section 308 of the Federal Water Pollution Control Act, as amended (33 U.S.C. 1318), relating to inspection, monitoring, entry, reports and information, as well as all regulations and guidelines issued thereunder.

K. In accordance with applicable laws, the Contractor shall furnish labor that can work in harmony with all other elements of labor employed or to be employed on the work and that he/she will comply fully with all laws and regulations applicable to awards made subject to M.G.L., Chapter 149, Section 44A. Without limiting the generality of the foregoing,

L. Labor Harmony shall include the provision of labor that will not cause, cause to be threatened or give rise to either directly or indirectly, any work disruption, slow-downs or stoppages by employees of other Contractors, while performing any work or activities incidental thereto.

M. The Contractor must comply with all requirements of Massachusetts Prevailing Wage Laws, M.G.L. c149, ∋∋26 and 27; and the Equal Employment Opportunity and Anti-Discrimination Policies (EOEA) of the Commonwealth of Massachusetts 301. CMR 50.00.

1.018 CITY OF QUINCY ORDINANCES AND POLICIES

A. The City of Quincy Blasting Ordinance, wherever applicable, shall be enforced on all projects located within the City limits. (Reference City Council Order No. 236 of 1988)

END OF SECTION

INTENTIONALLY BLANK

SECTION 012000 MEASUREMENT AND PAYMENT

PART 1 DESCRIPTION

1.01 GENERAL

A The following subsections describe the measurement of and payment for the work to be done under the items listed in Section 004100, FORM OF GENERAL BID.

B All work performed as described in these contract documents shall be paid for under one or more of the items listed in Section 004100, FORM OF GENERAL BID. All other activities required in connection with performance of the work, including all work required under Division 1, GENERAL REQUIREMENTS, whether described in the contract documents or mandated by applicable codes, permits and laws, will not be separately paid for unless specifically provided for in the FORM OF GENERAL BID, but will be considered incidental to performance of the overall project.

C This section supplements, as applicable, the measurements and payment provisions for each of the pay items under the technical sections.

D Measurement and payment for each unit or lump sum price stated in the Section 004100, FORM OF GENERAL BID shall constitute full compensation as herein specified for each item of work completed in accordance with the drawings and specifications. The value of each item listed in Section 004100, FORM OF GENERAL BID shall constitute full compensation for complete compliance with the requirements of that item, including all labor, equipment, materials, tools, incidental work and construction methods.

E The payment items listed herein and in Section 004100, FORM OF GENERAL BID are intended to provide full payment for the work shown on the drawings and specified herein. Any work called for or implied in the documents but not listed as a payment item shall be considered incidental to the overall project.

F Unless otherwise noted, any item requiring excavation shall include all earthwork required for each respective item and shall include compensation for disposal of surplus excavated material, and installation of all necessary sheeting and bracing, and shall be considered part of the item as listed in Section 004100, FORM OF GENERAL BID.

G Unless otherwise noted, each item specified or shown on the drawings shall be furnished and installed in accordance with the technical section whether a specific applicable payment item exists or not.

H In all items involving excavation, the price shall be based on doing the entire excavation in earth. Where rock is excavated, the price therefor shall be in addition to the cost of excavating the earth, and no deduction shall be made in the amount for earth excavation.

I All excavation, backfilling, compaction of excavated and borrow materials, sheeting, dewatering, bedding, furnishing, laying, jointing, testing pipe, tracer tape (if required), sidewalk replacement, curbing replacement, loaming and seeding, and cleaning up required for the installation of all pipes,

conduits and miscellaneous structures (sewer, water and drain lines, catch basins, manholes, handholes, conduit, ducts, test pits, planting pits, signage and fence posts, fire alarm, hydrants and valves, service connections, etc.) shall be considered included in the contract unit prices/lump sums stated in Section 0041000, FORM OF GENERAL BID.

J Allowances for the items covered under Section 015530 UNIFORMED OFFICER FOR TRAFFIC CONTROL are estimated for Bidding purposes based on the scope of this Project. Payment for uniformed traffic police officers will be paid for on the basis of the actual hours worked and as described in Section 015530 UNIFORMED OFFICER FOR TRAFFIC CONTROL. The invoiced amounts paid by the Contractor may NOT include standard administrative charges levied by the Police Department.

K Unless otherwise indicated, the work required for Support of Excavations shall not be separately measured for payment, but shall be considered incidental to the project. No payment shall be made under this item for trench boxes, sheeting or steel plates used at the Contractor's option in the course of the work.

L The following activities, whether or not explicitly stated elsewhere in these documents, shall be understood to be included under the relevant Pay Items in Section 004100, FORM OF GENERAL BID to which the activity is directly or indirectly incidental to or necessary for a satisfactory completion of the item, unless otherwise noted in the Technical Specifications:

1. The Contractor shall acquaint itself with all work associated with each Pay Item and no claims will be allowed based on unfamiliarity with the detailed scope of work, complexity of operations or other site-specific conditions.

2. Each lump sum or unit price stated in the Bid Form shall constitute full compensation for the item and shall include all work required for or incidental to or mandated by the applicable codes, permits, regulations and laws to complete the work items satisfactorily in accordance with the drawings, specifications and/or the current industry standards of performance and workmanship. Such activities, whether or not expressly stated in the contract documents, shall not be paid for separately unless specified otherwise.

3. All public/private agency permits not included herein but necessary to carry out the work under this contract shall be obtained by the Contractor at its own expense.

4. All excavations and backfilling required to remove unsuitable materials below grade shown on the drawings shall be considered included in the lump sum or unit price.

5. All existing improvements (loamed and grassed areas, bushes, landscapes, roadways or other surfaces), facilities/amenities damaged due to the Contractor's operations shall be restored at the Contractor's expense regardless of whether the damage is accidental, deliberate and/or due to construction work.

6. Testing requirements for all materials, equipment and new work (quality and workmanship) under this contract shall be as specified herein, or as per the applicable codes, standards and

regulations, as related to each item. All such testing, when ordered by the Engineer, shall be at the Contractor's expense.

7. The services of manufacturer's representatives and supervisory personnel required to insure correct equipment/instrument/appurtenance installation, testing and operations including training of the City Personnel and preparation of Operations/Maintenance Manuals shall not be paid for separately. All costs associated with these activities shall be considered included in the lump sum or unit price.

8. All work associated with the cleanup of site and new construction/ maintenance of roads and utility services during construction shall be at the Contractors expense.

9. All waste and unsuitable materials resulting from any item of work within the contract scope or from any other action related to the Contractors operations shall be disposed of by the Contractor at no cost to the City.

10. All useable materials, when declared surplus by the Engineer, shall either be disposed of off-site or transported and stockpiled at the DPW Yard or in another suitable area as directed by the Engineer at no additional cost to the City.

1.02 BASIS OF MEASUREMENT

A Before the contract award, the Contractor shall submit (for lump sum contract items only) to the Engineer, in triplicate, an itemized cost breakdown on all (significant contracts) work items. The quantity and cost breakdown for each item shall be reviewed and approved by the Engineer. When approved, the itemized breakdown shall become the basis for determining the progress payments and for negotiating change orders, if necessary.

B Measurement for work under this contract shall be done either in units as specified for each pay item in Section 004100, FORM OF GENERAL BID on the basis of percentage of the total works. The measurements/percentages shall be calculated by the Contractor and verified and agreed to by the Engineer.

C Said verification may be through mathematical calculations, payment vouchers, delivery receipts, field notes and/or actual inspection reports. The Contractor shall supply this information, as required, to determine the quantities/percentages for payment.

D All extra work shall be authorized in writing before the work is performed. All such work shall be paid for on the basis of the contract lump sum price breakdown/the contract unit prices as set forth in the Bid Form and described herein.

E No allowance shall be made for shrinkage, swelling, or voids for borrow materials, such as ordinary borrow, gravel, crushed stone, coarse aggregates, loam and other similar materials. For purposes of conversion, the average unit weight for such materials shall be at 130 lbs. /cu.ft. The average unit weight for rock materials (i.e. stones, stone chips, boulders and rocks) shall be at 170 lbs./cu.ft.

1.03 BASIS OF PAYMENT

A Payments shall be made for the actual work performed, in place and accepted by the Engineer. The payment shall be in accordance with the unit prices or lump sums as stated in the Bid Form. Payment for lump sum items shall be on the basis of a percentage of pay items completed, which shall be determined on the basis of the itemized cost breakdown agreed to above. No allowance or payment shall be made for any materials or equipment delivered and stored on site or for any materials, equipment or item of work, including labor and services, which are not incorporated in the work, unless specifically agreed to an approved by the Engineer.

1.04 PARTIAL PAYMENTS

A Upon presentation by the Contractor of certified copies of paid invoices, the Contractor may include in his Application for Payment to the City, advance payments for acceptable reinforcing steel, structural steel, stone, piles, culvert pipe or other non-perishable materials purchased expressly for the work and delivered on the work or in approved storage place at the site, but which materials are not considered as erected or complete in place under the items of the Contract, and for which partial payment would not be made until such materials and items were erected or complete in place.

B If it is impossible due to lack of area on the site or other valid reason, the Contractor may request in writing, permission from the Engineer to store materials off the site and still have the materials pad as material on hand and the engineer may approve payment. This request will state the reason for the request, location of proposed storage site, methods that will be employed to insure that material is properly protected and the materials will be used on the particular project and any other information as may be deemed necessary in order to evaluate the request. No advance payment for material stored off site will be made until written approval of the Engineer has been obtained. The amount to be included in the Application for Payment will be determined by the Engineer up to a maximum of 100% of the value of the materials as shown by the certified copies of the paid invoices. Payments will not be approved when the invoice value of such material as determined by the Engineer, amounts to less than $1,000.

1.05 INCREASED OR DECREASED CONTRACT QUANTITIES

A The City reserves the right to increase or decrease the quantity of any particular Item of Work.

B Where the quantity of a Unit Price pay item in this Contract is an estimated quantity and where the actual quantity of such pay item varies more than twenty-five (25%) percent above or below the estimated quantity stated in this Contract, an equitable adjustment in the Contract Price for that pay item shall be negotiated upon demand of either party. The equitable adjustment shall be strictly based upon any increase or decrease due solely to the variation above one hundred twenty-five (125%) percent or below seventy-five (75%) percent of the estimated quantity. In this regard, no allowances will be made for loss of anticipated profits suffered or claimed by the Contractor resulting directly or indirectly from such increased or decreased quantities or from unbalanced allocation among the contract items from any other cause.

1.06 APPLICATION FOR PAYMENT

A After the percentages of the total work to be invoiced have been verified and accepted by the Engineer, the application for payment shall be submitted in writing to the Engineer for final review and processing. Except for special permission, all applications for payment shall be on a "once a month" basis.

B The Engineer shall have ten (10) working days to review the application for correctness of quantities figures, completeness of supporting documentation and recommending the application for payment or returning application to the Contractor for additional information, revisions, and/or substantiation of amounts/quantities being invoiced.

C It must be clearly understood that once a payment application is recommended for payment, it may take from 30-60 days (depending on the source of project funds) before the Contractor receives the actual payment. The Contractor shall not be eligible for any interest payments on amounts due during these periods.

D Each payment application must be accompanied by the following documentation. No application for payment shall be processed unless it is prepared in accordance with the City format, is complete in all respects and is properly signed by the Contractor and the Resident Engineer.

1. Monthly progress report highlighting the major activities, problems (if any) and percentage of project complete to date and the forecast completion date.

2. Documentation supporting the quantities being invoiced (calculations, material/delivery slips, etc.)

3. Itemized statement on cost/quantity overruns, along with justification and proof of Engineer's authorization.

4. Certified payrolls for period being invoiced.

5. Statements and reports on the status of minority work force, Quincy residents employed, and MBE/WBE participation and performance (as applicable).

1.07 RETAINAGE

A The City shall withhold, as retainage, an amount equal to five percent (5%) of each progress/partial payment amount. The total amount retained or its percentage in relation to the total contract amount may not be reduced to assure quality of work, timely project completion and to cover any project deficiencies (materials, equipment and workmanship), restoration/replacement of improvements, facilities and amenities damaged due to Contractors operations.

B The percentage and/or amount of monies retained cannot be reduced or released until the following conditions are met:

1. The project is complete in all respects and all contractual obligations under Division 01, Section 013000: SUBMITTALS. A certification to this affect shall be required from both the Contractor and the Engineer before either the retainage amounts are returned or the contract closeout.

2. Before the final payment, all deliverables due the City must be received and acknowledged as satisfactory by the Engineer.

3. The project performance and payment bonds currently in force and shall remain in full effect from the date of project completion, as defined above, to the end of the Warranty Period, as specified or as applicable.

1.08 REIMBURSEMENT FOR CITY SERVICES

A Unless a specific work or an operation is requested or authorized to be performed by the City, beyond the agreed project construction work hours (normal), the Contractor will be required to reimburse the City for the cost of services rendered by a Resident Engineer or other City Engineering/Maintenance personnel beyond the normal project work hours.

B The City personnel operate on a five day work schedule, excluding Saturdays, Sundays and Legal Holidays. The telephone number for Engineering/Construction personnel is (617) 376-1950. The telephone number for the Maintenance personnel is (617) 376-1925.

C The Contractor shall be required to reimburse the City for the services of traffic police where it is beyond agreed hours, necessitated for the convenience of the Contractor, or because the Contractor is behind schedule and is on make-up schedule, or site management/control by the Contractor is causing hardship and safety concerns for an orderly conduct of business activities and public safety.

PART 2 PRODUCTS

2.01 ITEM 051200 – STRUCTURAL STEEL FRAMING

A MEASUREMENT – Work completed to date

B PAYMENT – Lump sum price

C SCHEDULE OF PAYMENT – Percentage Completed

D BASIS – Includes all labor, services, materials and equipment associated with furnishing, handling and installation of hot-dipped galvanized structural steel lintel beams; parts and accessories including but not limited to bolts and spacers; temporary shoring, assembly and installation in the existing stone wall; and other required Work.

2.02 ITEM 055000 – STOP LOG

A MEASUREMENT – Work completed to date

B PAYMENT – Lump sum price

C SCHEDULE OF PAYMENT – Percentage Completed

D BASIS – Includes all labor, services, materials and equipment associated with furnishing, handling, installing and testing of an aluminum stop log; parts and accessories including but not limited to appurtenant seals, guides, frames, lifting lugs, bolts, accessories and a lifting device; assembly and connection to concrete structure; and other required Work.

2.03 ITEM 311101-01 – REMOVE AND DISPOSE DRAINAGE PIPE

A MEASUREMENT – Work completed to date

B PAYMENT – Lump sum price

C SCHEDULE OF PAYMENT – Percentage Completed

D BASIS – Includes all labor, services, materials and equipment to remove and dispose existing drainage pipe regardless of depth; mortar sealing of pipe and structure; excavation, sawcutting, shoring and bracing; dewatering; backfill and compaction; gravel roadway base; backfill compaction and material testing; reconnection to existing pipe (including plugging abandoned penetrations); removal and off-site disposal; removal and off-site disposal or abandonment of old drain manholes and catch basins; removal and off-site disposal of bituminous concrete pavement, concrete and excess soils; erosion controls necessary to protect adjacent property and utilities; and other required work.

2.04 ITEM 311101-02 – REMOVE AND DISPOSE STORM DRAIN STRUCTURE

A MEASUREMENT – Actual drain manhole or catch basin removed and disposed

B PAYMENT – Unit price per each

C SCHEDULE OF PAYMENT – Percentage Completed

D BASIS – Includes all labor, services, materials and equipment to remove and dispose existing catch basins and drain manholes regardless of depth; excavation, sawcutting, shoring and bracing; dewatering; backfill and compaction; gravel roadway base; backfill compaction and material testing; reconnection to existing pipe (including plugging abandoned penetrations); removal and off-site disposal; removal and off-site disposal or abandonment of old drain pipes; removal and off-site disposal of bituminous concrete pavement, concrete and excess soils; erosion controls necessary to protect adjacent property and utilities; and other required Work.

2.05 ITEM 312300-01 – TEST PITS

A MEASUREMENT - Test pits as shown or as ordered by the Engineer and not incidental to construction shall be measured per cubic yard excavated and backfilled.

B PAYMENT – Unit price per cubic yard. The unit price established by the Engineer under Part (1) of the Bid Item Number is the minimum unit price to be used for test pit excavation and backfill. The unit price to be inserted by the Contractor in his bid under Part (2) of the Bid Item Number is intended to reflect the Contractor's additional costs for performing test pit excavation and backfill, should he decide that the minimum unit price in Part (1) of the Bid Item Number is insufficient compensation.

C SCHEDULE OF PAYMENT – Percentage Completed

D BASIS – Includes all labor, services, materials and equipment to excavate a test pit regardless of depth, and restore surface conditions; survey of structures and utilities encountered; excavation, sawcutting, shoring and bracing; dewatering; backfill and compaction; gravel roadway base; backfill compaction; erosion controls necessary to protect adjacent property and utilities; and other required Work.

2.06 EARTHWORK:

A Unless designated otherwise, earthwork shall not be separately measured for payment, but shall be considered incidental to construction of the project.

2.07 ITEM 312300-02 - UNCLASSIFIED EXCAVATION

A MEASUREMENT - The removal of unclassified excavation includes the satisfactory removal and disposal of all materials (except contaminated materials) encountered regardless of the nature of the materials and shall be understood to include, but not be limited to, blastrock, bedrock, earth, hardpan, fill, foundations, pavements, curbs, piping, railroad track and ties, cobblestones, footings, bricks, concrete, abandoned drainage and utility structures, and debris, and shall be measured by the cubic yard, within the payment limits as defined in the trench detail or as defined below.

1. Only boulders and concrete structures greater than one cubic yard and existing bituminous concrete pavement thicker than 8-inches, not including rail, brick, cobblestones, concrete masonry cement, or any item associated with railroad tracks, shall be included for measurement and payment.

2. Where rock is encountered, it shall be uncovered but not excavated until the Engineer has made measurements, unless, in the opinion of the Engineer, satisfactory measurements can be made in some other manner. The bidder shall include in the bid for items involving excavation, the cost of doing the entire excavation as earth. The price for the Item "Unclassified Excavation" is intended to cover the difference between the cost of unclassified excavation and the cost of earth excavation.

3. The cost of pre-blast surveys, vibration air blast monitoring, blasting records and post-blast inspection shall be considered incidental to the cost of rock excavation and disposal and will not be separately paid.

4. When two or more pipes are installed parallel to one another and the trench payment limits overlap, rock excavation in the overlap section will only be paid once.

B PAYMENT – Unit price per cubic yard. The unit price established by the Engineer under Part (1) of the Bid Item Number is the minimum unit price to be used for unclassified excavation. The unit price to be inserted by the Contractor in his bid under Part (2) of the Bid Item Number is intended to reflect the Contractor's additional costs for performing unclassified excavation and disposal, should he decide that the minimum unit price in Part (1) of the Bid Item Number is insufficient compensation.

C SCHEDULE OF PAYMENT – Percentage Completed

D BASIS – Includes unclassified excavation material removal, excavation, and disposal, furnishing and installing gravel borrow in its place, saw cutting, providing all required documentation of proper disposal of railroad ties and all other work required to remove unclassified excavation. Also includes drilling, blasting, excavation and disposal of rock shall be considered unclassified excavation and shall be included as a part of the contract price, with no separate payment items for its excavation and handling

2.08 ITEM 312300-03 - EXCAVATION AND BACKFILL OF UNSUITABLE MATERIAL ABOVE NORMAL GRADE:

A MEASUREMENT - If, in the opinion of the Engineer, the material at or above normal grade is unsuitable for use as backfill, it shall be removed and disposed of to such depths and widths within the limits of payment as ordered by the Engineer. Normal grade is defined as the elevation of the trench bottom, as shown on the drawings.

The quantity of earth excavation and backfill of unsuitable material above normal grade to be included for payment shall be the number of cubic yards of unsuitable material ordered to be removed and measured by the Engineer within the trench payment limit shown on the contract drawings, excluding quantities paid under other items.

Topsoil, paving materials, frozen material or ledge excavation above the normal grade of the trench excavation will not be considered for payment.

B PAYMENT – Unit price per cubic yard. Payment shall be made at the contract unit price of the items "Excavation and Backfill of Unsuitable Material Above Normal Grade (min)" and "Excavation and Backfill of Unsuitable Material Above Normal Grade (add'l)." The unit price established by the Engineer under Part (1) of the Bid Item Number is the minimum unit price to be used for excavation and backfill of unsuitable material above normal grade. The unit price to be inserted by the Contractor in his bid under Part (2) of the Bid Item Number is intended to reflect the Contractor's additional costs for performing the excavation and backfill of unsuitable material above normal grade, should he decide that the minimum unit price in Part (1) of the Bid Item Number is insufficient compensation.

C SCHEDULE OF PAYMENT – Percentage Completed

D BASIS – Includes all labor, services, materials and equipment to for excavation of unsuitable material above normal grade and disposal of unsuitable material, excluding materials noted above, and

furnishing, installing and compacting approved backfill materials as specified in the Contract Documents. The Contractor will not be reimbursed for excavation of unsuitable material above normal grade, which has not been ordered by the Engineer.

2.09 ITEM 312300-04 EXCAVATION AND BACKFILL OF UNSUITABLE MATERIAL BELOW NORMAL GRADE:

A If, in the opinion of the Engineer, the material at or below normal grade is unsuitable for use as foundation, it shall be removed and disposed of to such depths and within the limits of payment. Normal grade is defined as the elevation of the proposed pipeline trench bottom, as indicated on the drawings.

B MEASUREMENT – The quantity of earth excavation and backfill below normal grade to be included for payment shall be the number of cubic yards of unsuitable material ordered to be removed and measured by the Engineer within the trench payment limit as indicated on the contract drawings.

C PAYMENT – Unit price per Cubic Yard

D SCHEDULE OF PAYMENT – Percentage Completed

E BASIS – Includes labor, services, material, equipment and tools associated with excavation of unsuitable material below normal grade, disposal of unsuitable material, and furnishing, installing and compacting approved backfill materials as specified in Section 312300 of the Contract Documents. The Contractor will not be reimbursed for excavation of unsuitable material below grade, which has not been ordered by Engineer. The Contractor shall backfill and compact any such over-excavated areas in accordance with the specifications, at no additional cost to the Owner.

2.010 ITEM 312300-05 ADDITIONAL EARTHWORK BELOW NORMAL GRADE:

A MEASUREMENT – Additional earthwork necessary to lower the pipeline below the grade indicated on the drawings, if ordered by the Engineer, shall be measured per cubic yard.

B PAYMENT – Unit price per Cubic Yard

C SCHEDULE OF PAYMENT – Percentage Completed

D BASIS – Includes labor, services, material, equipment and tools associated with earth excavation and backfill with excavated material. Payment for the removal, disposal, and replacement of unsuitable material shall be in accordance with 2.09 above and all other required Work.

2.011 ITEM 321216-01 – ASPHALT PAVING

A MEASUREMENT – Per Ton delivered & placed based on plant slips

B PAYMENT – Unit price per Ton

C SCHEDULE OF PAYMENT – Percentage Completed

D BASIS – Includes labor, services, material, equipment and tools associated with furnishing and installing the asphalt regardless of placement method, subgrade grading and compaction; match pre-construction conditions, feather grade to meet surrounding elevation, and ensure smooth transition, compaction and material testing, and all other required Work. Hot Mix Asphalt for miscellaneous use will not be measured separately for payment but measured under this item.

Raising and adjusting castings shall not be separately measured for payment but shall be considered incidental to the project.

Pavement disturbed by the Contractor's operations outside payment limit as defined in the water trench detail shall not be paid under these items, but shall be repaired to its original condition by the Contractor at no cost to the Owner.

2.012 ITEM 321216-02 – MICROMILLING OF BITUMINOUS CONCRETE PAVEMENT

A MEASUREMENT – Per square yard of pavement removed and disposed

B PAYMENT – Unit price per square yard

C SCHEDULE OF PAYMENT – Percentage Completed

D BASIS – Includes labor, services, material, equipment and tools associated with milling, hauling, stockpiling and disposing milled material; and ensure smooth transition, and all other required Work. No additional payments will be made for multiple passes with the milling machine to remove the existing HMA surface to the grade specified. No separate payments will be made for: performing handwork removal of existing pavement and providing protection around catch basin inlets, manholes, utility valve boxes and any similar structures; repairing surface defects as a result of the Contractor's negligence; providing protection to underground utilities from the vibration of the milling operation; sawcutting micromilled limits; installing and removing any temporary transition; removing and disposing of millings; furnishing a sweeper and sweeping after milling.

2.013 ITEM 321216-03 – BITUMINOUS CONCRETE SIDEWALK REMOVE AND REPLACE

A MEASUREMENT – Per square yard of pavement removed and replaced

B PAYMENT – Unit price per square yard

C SCHEDULE OF PAYMENT – Percentage Completed

D BASIS – Includes labor, services, material and equipment associated with removing and off-site disposal of existing asphalt, replacement and compaction of sidewalk subgrade; gravel base, compaction and material testing, new asphalt sidewalk as necessary to match preconstruction conditions, feather sidewalk grade to meet surrounding sidewalk elevation, and ensure smooth transition, and all other required Work.

2.014 ITEM 321613.23 – PRECAST CONCRETE CURB

A MEASUREMENT – Linear foot of curbing installed

B PAYMENT – Unit price per linear foot

C SCHEDULE OF PAYMENT – Percentage Completed

D BASIS – Includes labor, services, material and equipment associated with provision and installation of precast concrete curbs including excavation, backfilling, saw cutting; surface preparation; cutting, jointing, tooling, curing and finishing of curb pieces, curb setting, placement of dense graded crushed stone, concrete bedding and pavement materials and other required Work.

2.015 ITEM 321613.43 – REMOVE AND RESET GRANITE CURB

A MEASUREMENT – Linear foot of curbing removed and replaced

B PAYMENT – Unit price per linear foot

C SCHEDULE OF PAYMENT – Percentage Completed

D BASIS – Includes all labor, services, material and equipment associated with removing existing granite curbs, storing in a secure location during excavation, saw cutting of the existing pavement where indicated or directed, the removal of the existing pavement, excavation, removal and resetting, all handling, cutting ends square, trimming exposed and hidden faces, cleaning all sections to be reset, gravel borrow, including grading and compacting and/or placement of concrete base, pavement materials between the reset curb and the existing or proposed pavement, replacement and compaction of sidewalk subgrade, resetting of original curbing to match pre-construction conditions, and all other required Work.

2.016 ITEM 321723 – PAVEMENT MARKINGS

A MEASUREMENT – Work completed to date

B PAYMENT – Lump sum

C SCHEDULE OF PAYMENT – Percentage Completed

D BASIS – Includes all labor, services, material and equipment associated with documenting and surveying existing pavement markings within the limit of work, removing of existing markings; surface preparation; furnishing and installing pavement markings in surveyed locations; and all other required Work.

2.017 ITEM 329600 – TRANSPLANTING

A MEASUREMENT – Work completed to date

B PAYMENT – Lump sum

C SCHEDULE OF PAYMENT – Percentage Completed

D BASIS – Includes labor, services, material, tools and equipment necessary to expose by excavation (mechanical and or by hand), remove the tree or shrubs and root systems, transported to protective storage; staking, fertilizing and backfill soil mix; maintenance and cleanup; cared for as directed and reinstallation directed by a Massachusetts licensed arborist.

2.018 ITEM 334100-01 – 12-INCH REINFORCED CONCRETE PIPE
ITEM 334100-02 – 15-INCH REINFORCED CONCRETE PIPE
ITEM 334100-03 – 30-INCH REINFORCED CONCRETE PIPE
ITEM 334100-04 – 24-INCH BY 18-INCH CONCRETE BOX CULVERT

A MEASUREMENT – Along the horizontal projection of the centerline of the pipe; measured from inside face of manhole

B PAYMENT – Unit price per linear foot

C SCHEDULE OF PAYMENT – Completion of Work and successfully pass testing – 100%

D BASIS – Includes labor, services, material and equipment associated with furnishing and installing the drain pipe; pipe connections; utility trace wire; temporary storm drain bypass; mortar sealing of pipe and structure; excavation; shoring and bracing; dewatering; bedding; stabilization fabric; backfill and compaction; gravel roadway base; backfill compaction and material testing; re-connection to existing pipe (including coring of new penetrations and plugging abandoned penetrations), provision & reconfiguration of brick invert of new & existing manholes, removal and off-Site disposal of old drain pipe; capping and abandonment of old drain pipe; removal and off-Site disposal of bituminous concrete pavement, concrete and excess soils; and other required Work.

2.019 ITEM 334726 – CROWN COLONY STORMWATER BASIN IMPROVEMENTS

A MEASUREMENT – Work completed to date

B PAYMENT – Lump sum

C SCHEDULE OF PAYMENT – Percentage Completed

D BASIS – Includes labor, services, material, tools and equipment necessary to clearing, grubbing, disposal of trash, debris and vegetation, grading, excavation & compaction; dewatering; backfill and compaction; furnishing and installing low permeability core fill material; seed; cut existing trees and expose by excavation, remove and/or cut, as required, the tree stumps and root systems to prepare

the site for construction, including removal and disposal of tree stumps, roots, organic matter and the other unsuitable materials resulting from the operation; seed spraying, limestone, fertilizers, fine grading, rolling the seeded areas, watering, clearing the weed and all else incidental thereto and necessary for healthy grass areas without any bare spots or areas; placement/spreading and rolling/tamping of the materials, excavation and preparation of areas and locations for installation of plant materials; erosion controls necessary to protect adjacent property and utilities; flushing, control of water, cleaning and legal off-site disposal of all sediment removed from existing storm drain pipes; temporary storm drain bypass; within the limits of Work associated with the stormwater basin improvements, and all other Work incidental to the satisfactory completion of the Work.

2.020 ITEM 334900-01 – CATCH BASIN

A MEASUREMENT – Actual catch basin furnished and installed

B PAYMENT – Unit price per each

C SCHEDULE OF PAYMENT – Percentage Completed

D BASIS – Includes labor, services, material and equipment associated with furnishing and installing the catch basin with frame and grate regardless of depth including; including brick & mortar to raise catch basin grate to grade, concrete collars; anti-floatation slab; pipe connections; joint sealant; excavation; shoring and bracing; bedding; stabilization fabric; dewatering; backfill and compaction; gravel roadway base; backfill compaction and material testing; removal and off-site disposal of bituminous concrete pavement and excess soils and other required Work.

2.021 ITEM 334900-02 – DRAINAGE MANHOLE

A MEASUREMENT – Actual drain manhole furnished and installed

B PAYMENT – Unit price per each

C SCHEDULE OF PAYMENT – Percentage Completed

D BASIS – Includes labor, services, material and equipment associated with furnishing and installing the manholes with frame and cover regardless of depth, including brick & mortar to raise catch basin grate to grade, concrete collars including; anti-floatation slab; pipe connections; joint sealant; excavation; shoring and bracing; bedding; stabilization fabric; dewatering; backfill and compaction; gravel roadway base; backfill compaction and material testing; removal and off-site disposal of bituminous concrete pavement and excess soils, and other required Work.

2.022 ITEM 334900-03 – DIVERSION STRUCTURE 1

A MEASUREMENT – Actual diversion manhole furnished and installed

B PAYMENT – Unit price per each

C SCHEDULE OF PAYMENT – Percentage Completed

D BASIS – Includes labor, services, material and equipment associated with furnishing and installing the diversion structures with frame and cover regardless of depth, including precast box culvert connection between precast structures brick & mortar to raise catch basin grate to grade; temporary storm drain bypass; concrete collars including; anti-floatation slab; pipe connections; joint sealant; excavation; shoring and bracing; bedding; stabilization fabric; dewatering; backfill and compaction; gravel roadway base; backfill compaction and material testing; removal and off-site disposal of bituminous concrete pavement and excess soils, and other required Work.

2.023 ITEM 334900-04 – DIVERSION STRUCTURE 2

A MEASUREMENT – Actual diversion manhole furnished and installed

B PAYMENT – Unit price per each

C SCHEDULE OF PAYMENT – Percentage Completed

D BASIS – Includes labor, services, material and equipment associated with furnishing and installing the diversion structures with frame and cover regardless of depth, including brick & mortar to raise catch basin grate to grade; temporary storm drain bypass; concrete collars including; anti-floatation slab; pipe connections; joint sealant; excavation; shoring and bracing; bedding; stabilization fabric; dewatering; backfill and compaction; gravel roadway base; backfill compaction and material testing; removal and off-site disposal of existing 48-inch corrugated metal pipe necessary to facilitate the installation of the new diversion structure; removal and off-site disposal of bituminous concrete pavement and excess soils, and other required Work.

2.024 ITEM 334900-05 – WATER QUALITY UNIT

A measurement – Actual water quality unit furnished and installed

B PAYMENT – Unit price per each

C SCHEDULE OF PAYMENT – Percentage Completed

D BASIS – Includes labor, services, material and equipment associated with furnishing and installing the water quality with frames and covers regardless of depth, including brick & mortar to raise frame and cover to grade; temporary storm drain bypass; concrete collars including; anti-floatation slab; pipe connections; joint sealant; excavation; shoring and bracing; bedding; stabilization fabric; dewatering; backfill and compaction; gravel roadway base; backfill compaction and material testing; removal and off-site disposal of bituminous concrete pavement and excess soils, and other required Work.

2.025 ITEM 334900-06 – DRAINAGE ACCESS MANHOLE

A MEASUREMENT – Actual drain manhole furnished and installed

B PAYMENT – Unit price per each

C SCHEDULE OF PAYMENT – Percentage Completed

D BASIS – Includes labor, services, material and equipment associated with furnishing and installing the manholes with frame and cover regardless of depth, including brick & mortar to raise catch basin grate to grade, concrete collars including; structural concrete slab with reinforcing, anti-floatation slab; sawcutting and/or coring the existing reinforced concrete slab; joint sealant; excavation; shoring and bracing; bedding; stabilization fabric; dewatering; backfill and compaction; gravel roadway base; backfill compaction and material testing; removal and off-site disposal of bituminous concrete pavement and excess soils, and other required Work.

2.026 ITEM 344116 – TRAFFIC SIGNAL LOOPS

A MEASUREMENT – Work completed to date

B PAYMENT – Lump sum

C SCHEDULE OF PAYMENT – Percentage Completed

D BASIS – Includes all labor, services, material and equipment and incidental costs associated with disconnection and removal of existing vehicle loop detectors; furnishing and installing new vehicle loop detectors including surface preparation and completion in accordance with the Standard Specifications and as described in the Contract Documents; coordination with City of Quincy Traffic Department and MassDOT; any work required for temporary signal modifications; and all other required Work.

2.027 ITEM 999999.01 – UNIFORMED OFFICER FOR TRAFFIC CONTROL

A MEASUREMENT – Work completed to date

B PAYMENT – Contingency

C SCHEDULE OF PAYMENT – Based on actual hours worked and invoices paid including standard administrative charges levied by the Police Department and excluding mark-up.

D BASIS – Includes all labor, materials, and equipment, tools and all else incidental thereto in the scheduling and managing of Uniformed Officer for Traffic Control.

2.028 ITEM 999999.02 – MISCELLANOUS UTILITY RELOCAITONS

A If the location and existing utilities encountered in the field deviate from the locations and configurations as shown Contract Plans, and in the Opinion of the Engineer, require additional utility relocations or adjustments, they shall be adjusted as directed by the Engineer.

B MEASUREMENT – Work Completed to date.

C PAYMENT – Based on actual hours worked as directed and verified by the Engineer required to complete the work as directed by the Engineer.

D SCHEDULE OF PAYMENT – Percentage Completed

E BASIS – Includes labor, services, material, equipment and tools associated with adjusting, relocating, modifying existing utilities or otherwise performing work relating to additional utilities not shown on the Plans as required and directed by the Engineer. The Contractor will not be reimbursed for any work which has not been ordered by Engineer.

2.029 SUPPORT OF EXCAVATION:

A Unless otherwise indicated, the work of this section shall not be separately measured for payment, but shall be considered incidental to the project.

B No payment shall be made under this item for trench boxes, sheeting or steel plates used at the Contractor's option in the course of the work.

2.030 LOAMING AND SEEDING:

A Loaming and seeding required above the subsurface utility installations shall not be separately measured for payment but shall be considered incidental to the project.

B The work of furnishing and installing a temporary cover crop shall not be separately measured for payment, but shall be considered incidental to the permanent seeding.

2.031 DEWATERING:

Unless otherwise indicated, the work of this section shall not be separately measured for payment, but shall be considered incidental to the project.

2.032 SIGNAGE:

Unless otherwise indicated, the work of this section shall not be separately measured for payment, but shall be considered incidental to the project.

2.033 CONNECTIONS TO EXISTING CULVERTS:

A Unless otherwise indicated, the work of this section shall not be separately measured for payment, but shall be considered incidental to the project.

2.034 ABANDONMENT OF EXISTING CULVERT:

A Unless otherwise indicated, the work of this section, including plugs, caps, concrete backing, or removal of valves and valve boxes as required, shall not be separately measured for payment, but shall be considered incidental to the project.

2.035 FIELD CONCRETE:

A Unless otherwise indicated, the work of this section shall not be separately measured for payment, but shall be considered incidental to the project.

2.036 PROTECTION AND RELOCATION OF EXISTING STRUCTURES AND UTILITIES:

A Unless otherwise indicated, protection or temporary removal and replacement of existing utilities and structures as described in Section 011000 and Section 015000 shall not be separately measured for payment, but shall be considered incidental to the project.

B Any bracing or restraint of utility poles required to complete the project shall not be separately measured for payment, but shall be considered incidental to the project.

2.037 TRAFFIC CONTROL:

A Unless otherwise indicated, Traffic Control and use of barricades, warning signals and all also incidental to maintain a safe work environment for the travelling public and employed staff as described in Section 011000 and Section 015000 shall not be separately measured for payment, but shall be considered incidental to the project.

END OF SECTION

SECTION 013300 SUBMITTALS

PART 1 GENERAL

1.01 DESCRIPTION OF REQUIREMENTS

A. This Section specifies the general requirements for technical and other submittals as related to materials, methods, equipment/appurtenances, special procedures and contract administrative matters. Typical submittals include shop drawings; product data; procedures for various treatments/workmanship and temporary work and facilities; contract schedules, reports, correspondence and similar activities. Additional submittal requirements are listed under the General Conditions and within the Technical Specifications.

PART 2 PRODUCTS

NOT USED

PART 3 EXECUTION

3.01 CONSTRUCTION SCHEDULES

A. The Contractor shall, within ten (10) days after the effective date of the Agreement, submit to the Engineer for approval, a detailed manpower, equipment and construction activity schedule to complete the work within the time allowed. The Contractor shall update the schedule every two weeks and resubmit the same duplicate until the project is completed. The Contractors progress schedule shall show the actual project progress as percentage of the total project vs. Contract completion time.

B. The Contractor shall also be required to submit, each month, a written project progress report, details of cost/quantity overruns where applicable, certified payrolls.

3.02 SHOP DRAWINGS

A. As required by the General Conditions, Contractor shall submit a schedule of shop and working drawing submittals

B. Shop drawings, as defined in the General Conditions and Technical Specifications, and as specified herein include, but are not necessarily limited to: custom-prepared data such as equipment design basis, manufacturer data sheets, equipment characteristics/performance data, fabrication and erection/installation drawings, dimensions, equipment setting diagrams, manufacturer instructions, custom templates, instrumentation and controls, foundation details, coordination drawings, and including required certifications, as applicable.

C. In accordance with the accepted schedule, the Contractor shall submit promptly to the Engineer, through its authorized resident representative at the job site, or by electronic transmission one (1) copy each of shop or working drawings required as noted in the specifications, of equipment, structural

details and materials fabricated especially for this Contract. When submittals require physical samples or submittals, in accordance with the accepted schedule, the Contractor shall submit promptly to the Engineer by mail, four (4) copies each of shop or working drawings.

A. One (1) copy of the shop and working drawings and/or catalog cuts will be returned to the Contractor electronically if the submittal allows. Two (2) copies of the shop and working drawings and/or catalog cuts will be returned to the Contractor if the original submission was made via mail, and the response requires a physical response. The Contractor shall furnish additional copies of such drawings or catalog cuts when he needs more than two copies or when so requested.

B. All shop and working drawings shall be submitted to the Engineer by and/or through the Contractor, who shall be responsible for obtaining shop and working drawings from his subcontractors and returning reviewed drawings to them. All shop and working drawings shall be prepared on standard size, 24-inch by 36-inch sheets, except those, which are made by changing existing standard shop or working drawings. Each shipment of drawings shall be accompanied by the Engineer's (if applicable) standard shop drawing transmittal form on which is a list of the drawings, descriptions and numbers and the names mentioned above.

C. The Contractor shall make submittals in accordance with approved schedule, and in a sequence that would not cause any delays. The submittals shall contain:

1. Date of submission along with the dates of any previous submission(s),

2. Project title,

3. Submittal identification number and title,

4. Names of the Contractor, supplier, and the manufacturer, along with identifying the product, with the specification section number,

5. Significant dimensions,

6. Standards, (ASTM or Federal Specification Number), and

7. Listing of all deviations from Contract Specifications.

D. Only drawings that have been prepared, checked and corrected by the fabricator should be submitted to the Contractor by his subcontractors and vendors. Prior to submitting drawings to the Engineer, the Contractor shall check thoroughly all such drawings to satisfy himself that the subject matter thereof conforms to the Contract Documents in all respects. Shop drawings shall be reviewed and marked with the date, checker's name and indication of the Contractor's approval, and only then shall be submitted to the Engineer. Shop drawings unsatisfactory to the Contractor shall be returned directly to their source for correction, without submittal to the Engineer. Shop drawings submitted to the Engineer without the Contractor's approval stamp and signature will be rejected. Any deviation from the Contract Documents indicated on the shop drawings must be identified on the drawings and

in a separate submittal to the Engineer, as required under subsection 6.17 Shop Drawings and Samples; C. Submittal Procedures, Paragraph 3 of the 2002 General Conditions.

E. The Contractor shall be responsible for the prompt submittal and resubmittal, as necessary, of all shop and working drawings so that there will be no delay in the work due to the absence of such drawings.

F. No material or equipment shall be purchased or fabricated especially for this Contract nor shall the Contractor proceed with any portion of the work, the design and details of which are dependent upon the design and details of equipment or other features for which review is required, until the required shop and working drawings have been submitted and reviewed by the Engineer as to their general conformance and compliance with the project and its Contract Documents. All materials and work involved in the construction shall then be as represented by said drawings

G. The Engineer will review the shop and working drawings as to their general conformance with the design concept of the project and general compliance with the information given in the Contract Documents. Corrections of comments made on the drawings during the review do not relieve the Contractor from compliance with requirements of the Contract Documents.

H. The review of the shop drawings is general and shall not relieve the Contractor of the responsibilities listed under Section 3.06 herein. The Contractor shall make any corrections or changes in the submittals required by the Engineer and resubmit until approved. The Engineer will review submittals once upon original submission and a second time if the Engineer requires a revision or corrections. If additional reviews are required, the Contractor shall reimburse the Owner amounts charged to the Owner by the Engineer for performing any review of a submittal for the third time or greater until approved.

I. With few exceptions, shop drawings will be reviewed and returned to the Contractor within 14 days of submittal.

3.03 PRODUCT DATA

A. Product data as defined herein include, but are not necessarily limited to: manufacturer standard product samples and product data, such as assembly instructions, materials, printed performance curves and operational-range diagrams based on actual shop tests (head capacity, efficiency, NPSH and horsepower, etc.), production/ quality control, inspection/test reports, certifications, mill reports, operation and maintenance instructions, recommended spare-part list, and printed product warranties, as applicable.

B. Shop Drawings shall show the principal dimensions, weight, structural and operating features, space required, clearances, type and/or brand of finish of shop coat, grease fittings, etc., depending on the subject of the drawings. When it is customary to do so, when the dimensions are of particular importance, or when so specified, the drawings shall be certified by the manufacturer or fabricator as correct for this Contract.

3.04 SPECIAL PROCEDURES

A. Special procedures as defined herein include, but are not necessarily limited to certain non-standard and site specific construction methods, that may, for example, be required in certain situations for deep excavations/embankments, piling, dewatering, shoring, sheeting, detours, traffic management and other temporary works and facilities.

3.05 CONTRACT ADMINISTRATION

A. Contract administration activities as defined herein include, but are not necessarily limited to all contract correspondence, invoices, reports on labor, equipment, schedules, estimates, forecast cash flows, claims and change orders, etc.

3.06 CONTRACTOR'S RESPONSIBILITIES

A. The Contractor shall review all shop drawings, product data/ samples prior to submission and verify that:

1. Actual field measurements and dimensions are compatible.

2. Service/design conditions are met.

3. Deviations from specifications, if any, are clearly stated.

4. The item/equipment/material conforms to the specifications.

B. Each shop drawings, product sample and catalog data submitted by the Contractor shall be signed certifying that:

"I hereby represent that I have determined and verified all field measurements, field construction criteria, materials, dimensions, catalog numbers and similar data and I have checked and coordinated each item with other applicable approved shop drawings and all Contract requirements."

Shop drawings not complying with the above shall be returned. The Engineer review shall be only for general conformance with the specification and design concept. This review does not constitute a rigorous design check.

C. The review and approval of shop drawings, samples or catalog data by the Engineer shall not relieve the Contractor from its responsibility from providing materials, equipment and level of workmanship, as specified.

D. No portion of the work requiring shop drawings, sample, or catalog data shall be started nor shall any materials be fabricated or installed prior to approval by the Engineer. All fabrication, materials, or on-site construction not conforming to approve shop drawings and data shall be corrected at the Contractor's expense.

3.07 SYSTEM TESTING, OPERATIONS & MAINTENANCE

A. The Contractor shall be responsible for conducting all start-up and operation tests as specified or as directed. All tests shall comply with the following:

B. All laboratory test of material, finished items, or equipment shall be made by bureaus, laboratories, or agencies approved by the City and copies of all test reports shall be submitted in duplicate by the laboratory to the City. The Contractor shall pay the cost of such tests.

C. Any additional test required beyond those required under these specifications may be ordered by the Engineer to settle disagreements with the Contractor. If the work/equipment/material is defective, the Contractor shall pay all costs of the extra tests and shall correct the work. If the work is satisfactory, the City will pay for the additional tests.

D. All start-up and commissioning tests shall be conducted as specified for each individual component separately and then for the total system as a whole. All start-up and commissioning tests shall be conducted under factory-trained supervision and certified as in compliance with the specifications and requirements.

3.08 OPERATION AND MAINTENANCE INSTRUCTIONS

A. The Contractor shall be responsible for supplying six (6) copies of written operations and maintenance manuals. The manuals shall be comprehensive enough to operate and maintain lighting control and irrigation systems, etc. (electrical, electronic, and other systems and the associated equipment).

The instructions shall be prepared as a systems manual applicable solely to a particular system and all equipment related to it. The manual shall include, as a minimum:

1. General systems descriptions along with operating instructions for each major system component, as applicable or as determined by the Engineer.

2. Instructions for all adjustments, calibrations and/or testing which must be performed at initial system start-up, along with adjustments to be made after the replacement of key components and adjustments which must be made in the course of preventive maintenance, as specified by the manufacturer.

3. Service instructions for major components not manufactured by the main equipment manufacturer.

4. Schematic diagrams for electronic equipment, the detail parts of which are normally repairable by the station operator, need to be included and shall not be substituted for an overall schematic diagram.

5. Complete equipment characteristics and performance data on pumps, motors, generators, gas/diesel engines and other parts/equipment shall be included in the operations/maintenance manual.

6. Facility layout drawings should show locations of all equipment such as valves, piping, bar racks and other items.

7. List of spare and consumable parts, with part numbers, along with addresses of local suppliers.

3.09 CONTRACT CLOSE-OUT

A. The Contractor shall provide to the Engineer the following before the close of the contract and before submitting the final application for payment:

1. Correspondence and back up for change orders and field changes.

2. Complete file of approved shop/erection drawings and wiring diagrams.

3. Log of all material and equipment delivered, including certificates and test results, as applicable.

4. Copies of all requisitions for payment, along with detailed substantiation of all quantity and cost overruns.

5. All labor and wage notices required by law.

6. All initial, interim and final reports on Minority Workers (MBE's, WBE's, and the percentage of City of Quincy residents employed under the contract).

7. All operation and maintenance manuals for all equipment supplied, including a list of spare parts with part numbers and supplier's address.

8. Four (4) sets of reproducible as-built drawings, and copies of all materials/equipment, work quality and other tests/systems.

9. All additional permits not included in these specifications.

10. Description of location and ties to survey markers and monuments installed under the contract.

11. Final reports on the corrective work based on the deficiencies noted during the initial and final acceptance, walk-through, inspections and tests.

12. Delivery of spare parts, as specified.

END OF SECTION

SECTION 015000 CONTROL OF WORK

PART 1 CONSTRUCTION

1.01 PROJECT SCHEDULES

A. The Contractor shall furnish plant and equipment to secure a satisfactory quality of Work and a rate of progress to insure a timely completion of the work.

B. The Contractor shall follow the agreed construction schedule, and all work progress shall be monitored against the on a bi-weekly basis, as required.

C. Refer to Section 011000 SUMMARY OF WORK for Project duration and milestones.

1.02 SITE SUPERINTENDENCE & WORK FORCE

A. The Contractor shall provide, at its own expense, during the entire course of the work, a competent full-time job superintendent to supervise the Contractor's employees, equipment operations and the general coordination and management of the project. The superintendent shall not work part-time as a tradesman, nor shall he be removed from the job except with the written permission of the Engineer.

B. The Contractor shall furnish a labor force, which will work in harmony and accord with all other labor forces taking part in, or connected with this project. The Contractor shall promptly remove from the work on this project any superintendent, assistant or workman who, in the opinion of the Engineer, is incompetent, unskillful, disruptive, or disorderly, and no person so removed from the work shall be re-employed on this project without the Engineer's written consent.

1.03 COORDINATION WITH LOCAL AGENCIES

A. The Contractor shall coordinate its activities with the Police, Traffic, Fire and Public Works Departments in the City, as required.

B. The Contractor shall maintain all area services and public amenities at all times and shall provide the Public Works Department with an address at which it can be contacted in an emergency. Upon notification by the City or the Engineer, the Contractor shall promptly restore services or make repairs as necessary or as directed.

C. The Contractor shall immediately notify utility companies of any damage to their utilities resulting from its construction operations.

D. The Contractor shall notify **DIGSAFE at 1-800-322-4844** at least 72 hours before excavating in any public way.

E. The Contractor shall give at least 48 hours written notice to the Engineer and the effected businesses, utilities, residents and abutters prior to the commencement of work on roads and utilities effecting traffic safety and safe access for abutters and performance of other normal area activities.

F. During the progress of the work, the Contractor shall remove debris, sweep and sprinkle water in work areas, maintain the area as necessary to minimize the creation and dispersion of dust. Calcium chloride shall not be used to control the dust problems.

1.04 SITE WORK

A. The Contractor shall, without additional compensation, be required to provide safe and convenient access to all abutters during the prosecution of the Work.

B. All construction areas shall be adequately safeguarded by providing temporary barricades, caution signs, lights and other means to prevent accidents to persons, and damage to property. The Contractor shall, at its own expense, provide suitable crossing from travel by pedestrians and workmen and take precautions to prevent injury to the public due to its construction operations. All excavated materials, equipment, or stockpiles that could be dangerous to the public shall be protected, barricaded, well lighted at nights, and/or removed off-site as directed by the Engineer.

C. The Contractor shall be responsible for the protection of all public and private property. Any direct or indirect damage done to public or private property for any reason due to the Contractor's operations shall be restored by the Contractor, at its own expense to a condition equal to or better than existed before the damage.

D. All open excavations shall be adequately safeguarded by providing temporary barricades, caution signs, lights, flares and other means to prevent injuries to persons and damage to property. The Contractor shall, at its own expense, provide suitable and safe means for completely covering all open trench excavations (backfilling or covering with steel plates of adequate strength) and for accommodating travel when work is not in progress. Bridges provided for access to private property during construction shall be removed when no longer required.

E. Test pits for the purpose of locating underground pipe lines, structures, or to determine the sub-surface conditions prior to or during construction shall be excavated and backfilled by the Contractor at his own expense regardless of whether the test pits are dug at the direction of the Engineer or for the convenience of the Contractor. Test pits shall be backfilled immediately and the surfaces restored and maintained in a manner satisfactory to the Engineer.

F. All precautions shall be taken to prevent freezing or damage to any of the exposed or partially uncovered utility lines. All trenches shall be backfilled as soon as possible and immediately followed by an installation of temporary bituminous surface. The roadway shall be free of construction debris and excavated material and shall be relatively smooth to provide safe passage.

G. Necessary access for fire apparatus and other emergency vehicles must be maintained at all times. Fire hydrants and water holes for fire protection on or adjacent to the project site shall be kept accessible to the fire apparatus at all times, and no obstructions shall be placed within 10 feet of any such facility.

H. When work at the site necessitates the temporary placement of vehicles, equipment, materials or workers in public streets, sidewalks or walkways, the Contractor shall provide and use all necessary

warning devices, barricades, signs, special apparel, etc., in the performance of the work, as set forth in Section 250 of the Standard Specifications.

I. No pavement work shall be done between December 15th and March 31st unless specifically permitted by the Engineer. Therefore, the Contractor shall not begin and construction which cannot be satisfactorily completed before December 15th. The Contractor shall not have any claim for extension of time for completion of the Work under this contract as a result of this restriction.

1.05 INTERFERENCE WITH EXISTING WORKS

A. The Contractor shall at all times conduct its operations so as not to interfere with the existing works. The Contractor shall develop a program, with the approval of the Engineer and interested officials, to provide for construction and putting into service of the new works in an orderly manner.

B. All work connected with cutting into and reconstruction of existing pipes or structures shall be planned to interfere with the operation of the existing facilities for the shortest possible time when the demands on the facilities best permit such interference.

C. The Contractor shall have no claim for additional compensation by reason of delay or inconvenience in adapting its operations to meet the above requirement.

D. Pipe lines will be located substantially as indicated on the drawings, but the City reserves the right to make modifications in alignment, sizes, fittings and appurtenances to suit field or the existing system operation/design conditions. This type of modification shall not relieve the Contractor from his contractual obligations in laying, jointing, and installing difference additional items, as required.

E. Where dimensions and location of existing structures are of importance in the installation or connection of any part of the work, the Contractor shall verify such dimensions and locations in the field at its own expense, before fabricating or ordering any material or equipment.

1.06 INTERFERENCE WITH STREETS/SIDEWALKS

A. The Contractor shall not close or obstruct any portion of a street, road, or private way without obtaining Apermits to perform work within limits of public ways from the Department of Public Works (DPW).

B. Streets, roads, private ways and walks under construction shall be maintained so as not to endanger the public/private properties and safety of the traveling public and residents at all times. The Contractor shall be fully responsible for all damages arising out of its operations and for the adequacy of safety measures provided at each site.

C. If the closure of a street of road is necessary, the Contractor shall notify the Police, Fire, Traffic and Public Works Departments and shall cooperate with the Traffic Department in the establishment of alternate routes. The Contractor shall provide and install the required number of detour signs (plainly marked and well-lighted) and take all other safety measures necessary to minimize confusion.

D. Along the location of work, all fences, stone walls, curbs, drives and walks, bushes, trees, shrubbery and other physical features which are within the limits of the streets or are associated with private property shall be protected to the satisfaction of the Engineer and to the satisfaction of the property owner(s).

E. Fences and other features removed by the Contractor for site access are to be restored in the location indicated by the Engineer as soon as conditions permit. All damages to existing physical feature shall be repaired to the satisfaction of the Engineer and the satisfaction of the affected property owner(s). All protection, repair, restoration and/or replacement work required shall be at the Contractor's expense.

1.07 PROTECTION/RELOCATION OF EXISTING STRUCTURES/UTILITIES

A. The Contractor shall assume full responsibility for the protection of all buildings, structures/utilities, public or private, including poles, signs, services to buildings, utilities in the street, (gas, water, sewer, drains, the electric and telephone, cable and the associated appurtenances) whether or not these are shown on the drawings. Any damage resulting from the construction operations shall be repaired at the Contractor's expense.

B. The City will provide the Contractor with all existing information to determine the location of existing lines and appurtenances for sewer, water and drainage systems. The Contractor, however, shall bear full responsibility for ascertaining the correct locations of all utility lines and associated structures and appurtenances before starting construction work.

C. The identification, relocation and/or resetting of hand-holes, manholes, vaults, valves, and other distribution control devices for the electric, gas, and telephone cable systems, shall be the responsibility of the respective utility companies. However, the Contractor shall obtain a comprehensive list of all such appurtenances from the utility companies, verify their physical location and shall be fully responsible for their protection during the construction operations.

D. All costs charges or damages resulting from lack of comprehensive pre-construction investigations related to the above items shall be borne by the Contractor.

E. Protection and temporary removal and replacement of existing utilities and structures as described in this section shall be considered as a part of the work under the Contract and all costs in connection therewith shall be borne by the Contractor.

F. In all public streets or private ways, except for City-owned utilities (water mains, sewers and drains), all relocation of utilities required for construction of the contract work shall be performed by the appropriate utility organization unless agreed otherwise by the utility company. The Contractor shall bear all expenses incurred because of utilities damaged due to its operations.

G. The operation of existing utilities shall not be interrupted except with written permission of the City and the operator of such utilities. The Contractor shall allow ample time and resources to implement all measures required for the continuation of existing utility operations. The Contractor shall request and coordinate all utility relocations, subject to permission of the Engineer. The

Contractor shall comply with all regulations, standards, methods and procedures particular to the utility organizations involved.

H. Utility relocation for the sole purpose of making excavation easier for the Contractor shall not be allowed. Should the Contractor desire to relocate publicly-owned utilities such as water mains, sewers and drains for the sole purpose of making excavation easier, they shall be relocated at the Contractor's expense.

1.08 PROTECTION OF TREES AND SHRUBS

A. The Contractor shall avoid all damage to trees along and adjacent to the work area. No tree or shrub shall be removed without the approval of the Engineer.

B. If during the progress of the work, the Contractor encounters any upland state-listed species on the construction site, the matter shall be immediately reported to the Engineer, the Quincy Conservation Commission, and further reported to the appropriate state agencies having jurisdiction over these matters.

C. All measure required for the protection of trees, shrubs and other resource areas shall be considered to be part of the work to be done under these specifications at no additional cost to the City.

1.09 PROTECTION AGAINST EROSION

A. The Contractor shall take precautions during construction to minimize erosion and run-off of polluting substances such as silt, clay, fuels, oils, bitumen's, and calcium chloride into the water resource areas.

B. Disposal of drainage shall be in an area approved by the City. Drainage water shall not be disposed of until silt and other sedimentary materials have been removed.

C. Stacked bales of hay shall be provided at points where drainage from the work site leaves the site to reduce the sediment content of the water. Sufficient bales of hay shall be provided such that all flow will filter through the hay. Other methods that reduce the sediment content to an equal or greater degree may be used as approved by the Engineer..

D. Erosion control measures must be adequate to ensure that turbidity in the receiving water will not be increased more than 10 standard turbidity units (s.t.u.), or as otherwise required by the state or other controlling body, in waters used for public water supply or fish unless limits have been established for the particular water. In surface waters used for other purposes, the turbidity must not exceed 25 s.t.u., unless otherwise permitted.

E. Erosion Controls shall be installed in accordance with Section 312500 EROSION CONTROL and the Project Drawings. Payment for Erosion Controls shall be in accordance with Section 312500 and Section 012000 MEASUREMENT AND PAYMENT.

1.010 SITE CLEAN-UP AND DISPOSAL OF SURPLUS WASTE MATERIAL

A. The Contractor shall remove and dispose of all surplus and/or waste materials including surplus excavation, broken pavement, lumber, metal pipe and appurtenances, old equipment, temporary structures, and any other refuse from the construction operations.

B. Stone base and/or gravel base materials, manhole/catch basin castings, valves, gates, etc., if not used in the project, will remain the property of the City of Quincy unless specifically directed by the Engineer to dispose of the materials off-site. If the City decides to keep the materials, the Contractor will be required to load and haul the materials to the DPW yard at 55 Sea Street, Quincy, at no additional cost.

C. In order to prevent environmental pollution arising from the construction activities, the Contractor and sub-contractors shall comply with all applicable federal, state and local laws and regulations concerning waste material disposal, as well as the specific requirements stated in this section and elsewhere in the specifications specified herein.

D. The disposal of excess excavated materials in wetlands, stream corridors, and plains is strictly prohibited even if the permission of the property owner is obtained. Any violation of this restriction by the Contractor or its employees will be brought to the immediate attention of the responsible regulatory agency, with a request that appropriate action be taken against the offending parties.

E. All new and existing interfacing pipe lines, appurtenant structures within the project limits and the adjacent effected section shall be left in a clean and operable condition at the completion of the work. It shall be the responsibility of the Contractor to make certain that the new systems carrying run-off, sewage and water (as applicable) within the limits of this project operate efficiently to their points of discharge into the existing system. The Contractor without additional compensation shall remove all debris in pipes and structures as a result of the Contractor's operations.

END OF SECTION

SECTION 015142 TEMPORARY STORM DRAIN BYPASS

PART 1 GENERAL

1.01 DESCRIPTION OF WORK

A Furnish, install and maintain temporary measures for storm drain bypass, including but not limited to, temporary bypass piping, plugs, and pumping.

1.02 ADMINISTRATIVE REQUIREMENTS

A Coordination, Sequencing, and Scheduling: in accordance with Division 01 General Requirements.

1.03 SUBMITTALS

A Submit in accordance with the Division 01 General Requirements.

B Bypass Pumping Plan for each bypass location to Engineer and Owner 2 weeks prior to bypassing stamped by a Massachusetts Registered Professional Engineer.

C Bypass Pumping Plan must contain at a minimum:

1. Standard Operating Procedure: Describe the normal sequence of events to be followed while setting up, pumping, and breaking down pumping equipment. Plan must address strategies and safeguards to ensure that public safety and environmental health is maintained at all times, the possibility of property damage and wetlands impacts, and overall level of inconvenience is minimized.

2. A bypass routing diagram including pump location for each Work zone,

3. Calculations: Estimates of anticipated peak flows, pump rates, pump curves, and other relevant design.

4. List of the equipment that will be used during normal pumping operation.

5. Emergency Response Plan: Describe the intended means of handling the following situations, include both response and clean-up measures. List equipment to be used and where it will be stored in case of emergency:

   a. Break or failure of bypass line (pipe)

   b. Failure of bypass pump

   c. Overflow

   d. Back up into dwelling or onto private property

   e. Failure of bypass pumping system to accommodate flow.

D Shop Drawings

1. Pumps
2. Pipe or hose
3. Joints/couplings
4. Plugs and/or bladders

1.04 SITE CONDITIONS

A Existing Conditions: per Division 01 General Requirements.

PART 2 PRODUCTS

2.01 PUMPS, PIPES & FITTINGS

A Pump: suitable for usage with storm drainage and capable of conveying the volume of flow anticipated with a sufficient margin of safety. Provide for 100 percent redundancy (two pumps shall be provided AT THE SITE for every one pump required) if flow cannot be returned to the storm drain at any time if pumping system failure occurs. Redundant pump: include suction and discharge piping and quick connect couplings to facilitate change out of pumps.

B Pipe and fittings: constructed of carbon steel, or fused high-density polyethylene pipe or approved equal. Fittings shall be quick-disconnect type.

C Lay flat hose: extra heavy duty, highly abrasion resistant and fitted with gasketed couplings. Hose shall be rated for 150% of working pressure.

D Provide a temporary enclosure for the bypass pumping system for sound attenuation operating outside of regular working hours meeting state and local Laws and Regulations for noise requirements.

PART 3 EXECUTION

3.01 GENERAL

A Adequately bypass flow around the affected section of the Work, even instantaneous peak flows, without damage or overflow. Be aware of potential large instantaneous flow contributors connected to the storm drain under repair.

B Allow for passage of traffic. Protect bypass piping at driveway and street crossings.

C Maintain roadway drainage system during precipitation events to prevent flooding of public right-of-way and adjacent properties.

1. Protect against surcharging of the existing system upstream during dry weather and wet weather flows.
2. Protect Site from flooding. Provide measures to adequately isolate the Site from backflow of adjacent waterways to provide dry working conditions.

D Continuously monitor bypass operations regardless of duration or timing of bypassing.

E Coordinate bypassing with low-flow times, to the extent feasible. Ensure no overflows or backups occur.

F Temporary damming of waterways is not allowed.

G If it is determined that bypass pumping is not required at a location due to lack of flow or that a Work item does not require bypass pumping to be performed, and the decision is agreed upon by the Engineer, provide protection of flows from any construction debris and ensure that no debris enters the storm drain system.

H Bypass Pumping

1. Bypass storm drain pumping: a typical manhole to manhole or catch basin to manhole bypass pumping setup.

2. Submit a bypass plan to Engineer prior to implementation of such Work and prior to the start of construction.

I Restore normal service to entire system at the end of normal working hours every day or post an attendant on site.

J Repair any damage that occurs to existing pipes and structures to the satisfaction of the Engineer.

K Temporary Bypass will be considered incidental to the Work to be performed, unless otherwise indicated.

3.02 FLOW DATA

A The entire project area consists of active storm drains; therefore, flows and flow data are variable depending on location, weather conditions and tides. Maintain flows as specified under all flow conditions and, therefore, visiting areas of the Site prior to Work to visually inspect flow conditions is encouraged.

B Portions of the Project are subject to tidal infiltration and inflow. Account for tide elevations, tide cycles, and tidal I/I volume in the planning and conduct of the Work.

C Portions of the Work are subject to groundwater inflow. Account for groundwater infiltration in the planning and conducting the Work.

3.03 TEMPORARY POWER

A Provide fuel and / or power to run all pumps associated with the bypass at no additional cost to the Owner. Include emergency backup power or backup fuel storage as part of the Bypass Pumping Plan.

3.04 PIPING

A Lay temporary piping along the general lines of the street in a manner that causes the minimum amount of disruption and is least likely to be damaged. Make provisions at driveways, provisions to permit property owners to drive over the temporary pipe by use of temporary bituminous pavement,

cold patch, or other approved material to form a ramp on each side of the pipe to the satisfaction of the Engineer or by depressing the pipe as directed by the Engineer.

3.05 OPERATION AND MAINTENANCE

A Attend to the bypass system at all times. Provide an attendant if bypass pumping must continue past working hours.

END OF SECTION

SECTION 015200 TEMPORARY CONSTRUCTION FACILITIES

1.01 DESCRIPTION

A. The Contractor shall provide all temporary construction support facilities and controls, such as staging area, temporary stockpile areas, pre-construction surveys and bench mark and base lines to control and to layout the works as necessary and as specified or as directed by the Engineer. The contractor shall also provide all utility services and miscellaneous supplies required for satisfactory control of the works.

1.02 CONTRACTOR'S STAGING AREA

A. The Contractor's attention is directed to the fact that the City will not provide a staging area for the storage of construction plant equipment, material or supplies. All permits required for selection of staging area and the Contractor must obtain its proposed use from the local or State agencies having jurisdiction over the area. The cost of obtaining a staging area and the associated permits shall be considered to be included in the bid prices for the various items of work as listed in the Bid Form.

B. At no time shall any material, equipment, construction plant be stored on the beaches, public streets, private ways, sidewalks and other public areas.

C. The Contractor shall not enter or occupy private land outside of easements, except by permission of the landowner and the approving public agencies.

D. Only the equipment and materials ready for incorporation into the work shall be delivered and temporarily stacked on site. All materials and equipment thus delivered shall be placed so as not to injure any part of the work or the existing facilities and such that free access can be had at all times to all parts of the work.

E. All unrelated or idle construction plant waste and/or excess materials shall be removed from the site immediately.

1.03 ENGINEER'S FIELD OFFICE AND EQUIPMENT

A. The Contractor will not be required to provide Field Office.

1.04 REMOVAL OF TEMPORARY BUILDINGS AND EQUIPMENT

A. On or before the completion of the work, the Contractor shall, unless otherwise especially directed or permitted in writing, tear down and remove all temporary buildings and structures. The Contractor shall remove all temporary roads, staging areas, including tools and construction equipment from the site. The Contractor shall remove/cover all organic matter and waste materials in, under and around houses, and other buildings. The Contractor shall remove all rubbish and waste materials from the site and leave the area and adjacent properties in a neat and satisfactory condition.

END OF SECTION

INTENTIONALLY BLANK

SECTION 015500 TRAFFIC AND SAFETY CONTROLS

1.01 DESCRIPTION

A. The work under this Item shall conform to the Manual on Uniform Traffic Control Devices (Part IV, as amended), requirements of this section, the relevant provisions of Section 850 of the Standard Specifications, and work as shown or as directed.

B. The work shall include furnishing, installing and maintaining various traffic control devices for the protection of area residents, the traveling public and workers during construction operations.

C. All signs, barricades, cones and drums shall have Encapsulated Lens Reflective Sheeting in accordance with Section M9.30.2 of the Standard Specifications.

D. The Contractor shall develop and coordinate a Traffic Control Plan for all work with the City of Quincy Planning and Community Development Department, Quincy Department of Public Works, Quincy Police Department for traffic control and the local school crossing guards.

All costs associated with preparation of and implementation of a Traffic Control Plan shall be the responsibility of the Contractor and shall be considered included in the contract lump sum/unit prices listed in Section 004100 FORM OF GENERAL BID.

1.02 FLAGS FOR ADVANCE WARNING SIGNS

A. Standard orange and red-orange flags (16-inch minimum) shall be mounted on all signs in advance of starting the work.

B. Flags shall be mounted as shown on page 6B-13 of the Mass. Manual on Uniform Traffic Control Devices (MUTCD) and shall not interfere with a clear view of the sign face.

C. Reflectorized plastic drums and the reflectorized plastic drums with flashers (Type A) shall be placed as directed by the Engineer.

D. Plastic drums shall not be less than 19-inches in any diameter transverse to the direction of traffic flow, nor less than 14-inches in any diameter.

E. Flexible reflective sheeting shall be applied to all plastic drums in accordance with the Drawings in the Standard Specifications.

1.03 PROVISIONS FOR TRAVEL AND PROSECUTION OF THE WORK

A. The Contractor shall submit a Schedule of Operations as provided for in the Standard Specifications, for the Engineer's approval before any work is started. The schedule of operations shall include a plan of construction procedures and the safety measures to be used during the execution of the work.

B. A work schedule incorporating all traffic control appurtenances and defining utilization of access points shall be submitted to the Engineer for approval. All temporary work shall be in conformance with Section 850 of the Standard Specifications, as last amended and supplemented by the following:

1. The Contractor shall provide such temporary bridging, steel plates, temporary pavement, wood-framed walkways, caution safety and other necessary signs directing the pedestrian/vehicular traffic towards unblocked and safe areas.

In areas where the construction activity is in progress, the Contractor is required to install directional signs in front of businesses saying "OPEN FOR BUSINESS" or something similar for guidance of the shoppers. The Contractor shall provide safe access/egress, as defined above, to all businesses and abutters within the project area.

2. The Contractor shall schedule its operations so as to cause the least interruption at all times in the flow of traffic on existing roads during construction and shall provide for the safe and convenient passage of pedestrians and vehicles throughout the project area and the adjacent areas impacted by the construction operations.

3. During construction hours, traffic flow must be controlled by Uniformed Traffic Police Officers, in accordance with Section 015530 - UNIFORMED OFFICER FOR TRAFFIC CONTROL. Between the hours of 9:00 AM and 3:30 PM, a minimum of one moving lane shall be maintained on the roadways in each direction. During peak traffic hours, the Contractor may be required to open more than one moving lane in one or both directions, as directed by the Engineer.

4. For construction after normal work hours, on weekends, and holidays, at least one traffic lane with pull out areas must be made available to pedestrian and vehicular traffic. Gravel borrow and bituminous concrete needed to maintain temporary passable travel lane ramps to allow access and egress to abutting properties shall be provided as needed, by the Contractor.

5. Certain construction operations such as utility work and roadway/sidewalk reconstruction may restrict access/egress on some roads and to businesses and abutters. Under these circumstances, the Contractor is required to schedule his operations during off-peak hours or late evenings and in small stretches so that a particular work activity can be completed in the shortest possible time.

   The Contractor is required to give abutting property owners 48 hours notice of periods when access/egress will not be available. It is again stressed that the City of Quincy considers the access/egress to abutting residences and businesses of critical importance and the Contractor must implement provisions of safe access/egress.

6. Particular care shall be exercised to establish and maintain such methods and procedures that will not create hazards of any nature. Traffic control, safety devices and/or signs having messages that are irrelevant to normal traffic conditions will be removed or properly covered at the end of each work period. Signs are to be kept clean at all times and legends shall be distinctive and unmarred.

7. In areas of high pedestrian and vehicular traffic volume, the Contractor is required to remove all waste materials and construction equipment from the work site and clean and make the site and its approaches safe on a daily basis. The construction equipment shall not be parked overnight on the site or the adjacent roads unless permitted by the Engineer.

8. In the event that the digital controllers are not available from the manufacturer when needed, the Contractor shall provide temporary mechanical controllers at no extra cost.

9. Night watchmen may be required where special hazards exist.

10. Unless permission to close a street is received in writing from the City, all excavated materials shall be placed so that vehicular and pedestrian traffic is maintained at all times. If the Contractor's operations cause traffic hazards, appropriate safety measures satisfactory to the Engineer shall be implemented immediately.

11. Detours around construction will be subject to the approval of the City Traffic Engineer. where detours are permitted, the Contractor shall provide all necessary barricades, flashers, flashing arrows and sighs in conformance with the Local and State regulations and standards to divert the flow of traffic. The Engineer will strictly control the periods when traffic is being detoured.

12. The Contractor will be responsible for posting signage that clearly states that any vehicle impeding the progress of construction will be towed at the Owner's expense. If Contractor fails to post such signs, Contractor will be responsible for **all** towing charges.

13. The Contractor will be fully responsible for all injuries or claims, damage to public and private properties, and any violations of the local, state or federal regulations resulting from his construction operations whether or not police protection has been provided. The services of uniformed traffic police shall in no way relieve the Contractor of its responsibilities under the Contract.

END OF SECTION

INTENTIONALLY BLANK

SECTION 015530 UNIFORMED OFFICER FOR TRAFFIC CONTROL

PART 1 GENERAL

1.01 WORK INCLUDED:

A. This Section covers the provisions for furnishing Uniformed Officers for Traffic Control and Maintenance of Traffic.

1.02 DESCRIPTION:

A. The Contractor shall coordinate with the local jurisdiction's Traffic Control Officer to determine the number of Officers deemed necessary to provide for public safety and to maintain a smooth flow of traffic through the construction area(s) affected.

B. All uniformed traffic police personnel required for public safety and traffic control for construction projects located within the City shall be authorized by the Department of Public Work's Safety Officer and/or the Project Resident Engineer.

C. The intent of posting police details is to insure public safety and protection of property through appropriate traffic control. Police personnel are not to be employed as watchmen to protect the Contractor's equipment and materials. Nothing contained herein shall be construed as relieving the Contractor of any of his responsibilities for protection of the public and property under the terms of the Contract.

1.03 RELATED WORK:

A. SECTION 015000 CONTROL OF WORK AND MATERIALS

B. SECTION 015500 TRAFFIC AND SAFETY CONTROLS

PART 2 PRODUCTS

2.01 UNIFORMED OFFICERS:

A. Contractor shall provide the Traffic Control Officer with a minimum of 24 hours notice indicating the time of day, street location and confirm number of officers required for traffic control.

B. Contractor shall give the Traffic Control Officer a minimum of 2 hours prior cancellation notice should Contractor determine that due to weather or conditions beyond his control he would not need the scheduled officers.

C. Contractor shall pay for officer(s) at the prevailing rate established by the local police department should officers not be needed and the Contractor fails to cancel the officers as noted in 2.01.B above.

D. Where the Owner is paying directly for Traffic Officers and the Contractor cancels scheduled officers, the Contractor shall be responsible for payment of the wages for cancellations if not cancelled in accordance with 2.01.B and 2.01.C above.

E. While scheduling work in areas where uniformed traffic police is required, the Contractor must recognize that uniformed police are paid for a four-hour minimum. If uniformed police are arranged to work and weather or some other situation prohibits the work, the Police Department Detail Unit shall be notified at (617) 479-1212 before 5:30 AM on the day of intended work to cancel the work

order. Unless the work order is canceled in time, the Contractor shall be charged at the rate of minimum four hours for each officer included in the detail. The Contractor shall be fully responsible for payment of all charges thus incurred.

2.02 SUBMITTALS:

A. The project construction contractor shall submit a forecast weekly traffic police detail schedule, at least 72 hours days prior to the start of the work. The schedule shall describe the nature and location of the work, the number of police personnel and the estimated number of police hours required for each location. The Contractor must also include justification for each uniformed officer being requested. All payment to the police for work under this contract shall be in accordance with the Massachusetts General Laws, Chapter 149, Section 34B, which states that reserve police officers shall receive the same prevailing wage rate as paid to regular police officers.

B. The Contractor shall submit copies of all traffic police invoices paid (include copy of cashed check paid to police) with its regular Application for Payment. These invoices shall clearly show the following:

1. the project name;
2. the officer's name;
3. location of assignment;
4. date of assignment;
5. hours of assignment; and
6. number of hours being invoiced.

PART 3 EXECUTION

3.01 OPERATION:

A. Contractor shall provide barricades, barrier fences, traffic signs, and other traffic control devices as required by the Owners Traffic Control Officer, or as directed by the Engineer, to protect the work area from traffic, pedestrians, and animals.

B. Contractor shall relocate barricades, signs and other devices as necessary as the work progresses as directed by the Owners Traffic Control Officer or the Engineer.

PART 4 MEASUREMENT AND PAYMENT

4.01 GENERAL

A. Reimbursement to the Contractor for uniformed traffic police details shall be made from amounts allocated under Pay Item 999999.01: Traffic Police Details in Section 004100 FORM OF GENERAL BID. Payment for uniformed traffic police officers will be paid for on the basis of the actual hours worked and paid for by the Contractor as verified by the Resident Engineer.

B. The set prices for Traffic Police Details are based on the prevailing hourly wage rates included in Division 00 BIDDING AND CONTRACT REQUIREMENTS.

C. Administrative fees associated with Traffic Police Details will not be allowed for this Project, and will not be paid.

D. The Contractor shall make actual payment to the traffic authority and the Contractor shall be reimbursed by the Owner through the payment estimate. If police wages change during the course of the Contract, the unit prices under this item will be changed accordingly.

E. Failure to include information decribed in Section 2.02.B along with a proof of payment with the "application for payment" shall result in non-payment of invoiced amount.

F. The measurement and payment provisions listed under Section 012000 MEASUREMENT AND PAYMENT shall supplement the above payment provisions, as applicable.

END OF SECTION

INTENTIONALLY BLANK

SECTION 015700 ENVIRONMENTAL PROTECTION

1.01 DESCRIPTION

A The Work under this section shall consist of all environmental mitigation measures designed to minimize various types of pollution and resource area contamination, including airborne dust, equipment noise, drainage and soil erosion, alteration/damaging or dumping hazardous waste or rubbish in resource areas. The Contractor shall furnish all labor, materials, tools and equipment and perform all work required for the prevention of environmental pollution resulting from its construction operations.

B The requirements set forth in this section are intended to minimize the adverse impacts on populated and cross-country areas, stream crossings, coastal areas, beaches, flood plains, marshes, wetlands, wild life and marine life due to construction activities in and adjacent to all resource areas.

C All work shall be in accordance with the applicable Local, State and Federal laws and regulations and the Quincy Conservation Commission's Order of Conditions.

1.02 NOTIFICATION

A The Engineer will notify the Contractor in writing of any non-compliance with the foregoing provisions. The Contractor shall, after receipt of such notice, immediately take corrective action. In case of non-compliance, the Engineer will order stoppage of all or part of the work until satisfactorily corrective action has been taken. No claim for an extension of time or for extra costs or loss incurred by the Contractor as a result of time lost due to any stop orders shall be made unless it was later determined that the Contractor was in compliance.

B Prior to commencement of the Work, the Contractor shall meet with the Engineer to develop mutual understandings relative to compliance of the environmental protection program.

1.03 CONSTRUCTION ACTIVITY

A Insofar as possible, the Contractor shall confine all activities, including clearing, grubbing, excavation and construction of works, to those areas defined by the plans and specifications. All land resources within the project boundaries and outside the limits of permanent work performed under this contract shall be preserved in their present condition or if damaged, shall be restored to their original condition after completion of construction.

1.04 PROTECTION OF WATER RESOURCES

A The Contractor shall not pollute streams, lakes or reservoirs, wetlands and beaches with fuels, oils, bitumens, calcium chloride, acids or harmful materials. It is the Contractor's responsibility to comply with all applicable Federal, State, County and Municipal laws regarding pollution of rivers/streams. Special measures should be taken to insure against spillage of any pollutants into public waters.

1.05 PROTECTION OF WETLANDS

A The Contractor shall make every effort to minimize disturbances within the areas designated as wetlands. Easement widths shall be limited to the widths shown on the drawings. The Contractor shall make sure that wetlands are restored to the conditions existing prior to construction.

B The Contractor shall carefully remove and stockpile the top 24-inches of soil. This topsoil material shall be used as backfill for the trench excavation top layer. The elevation of the trench is to be restored to the pre-construction elevations wherever disturbed by the Contractor.

C A trench box and/or sheeting or bracing shall be used to support the excavation in wetlands.

D Excavated materials shall not be permanently or temporarily stored in wetlands. Temporary storage areas for excavated materials shall be as directed by the Engineer.

E The Contractor shall be required to utilize timber or rubber matting to support equipment in wetlands. The timber or rubber matting shall be constructed in such a way so that it is capable of supporting all equipment loads necessary to complete the construction work. The timber or rubber matting shall be constructed of materials and placed so that, once removed, the material below the matting is not unduly disturbed, mixed or compacted in such a way that would adversely effect the recovery of the existing plant life.

1.06 PROTECTION OF EXPOSED AREAS

A The Contractor shall limit the area of land that is exposed and free from vegetation during construction. In areas where the period of exposure will be greater than two (2) months, temporary vegetation, mulching or other protective measures shall be provided as specified.

B Where temporary cover crop will be used, the Contractor shall insure that materials used for temporary vegetation are adaptive to the sediment control. Materials to be used for temporary vegetation shall be approved by the Engineer.

C Loaming and seeding or mulching of cross-country areas shall take place as soon after completion of work in that area as practicable. This shall be considered part of the clean-up work, and full payment for the work will not be made until it has been completed.

1.07 LOCATION OF STORAGE AREAS

A No excavated materials or materials to be used in backfill operations shall be stored within a minimum distance of fifty (50) feet of any watercourse or any drainage facility.

B No storage of equipment or materials shall be permitted in wetlands.

C In cross-country areas when excavating in wetland or flood plain, where no temporary diversion structure is required, the excavated material shall be placed on the uphill side of the trench so that the trench serves as a barrier between the excavated material and the wetland or flood plain.

1.08 HAY BALES AND SILT FENCES

A Adequate measures for erosion and sediment control such as the placement of baled hay or straw around the downstream perimeter of stockpiles shall be employed to protect downstream areas. The bales of densely packed hay with tightly bound biodegradable ties shall be installed as shown on the drawings . The bales shall be staked to prevent overturning, floatation, or displacement. All sediment deposited behind the bales of hay and silt fences shall be removed periodically.

B Where shown on the drawings or as directed by the Engineer, the Contractor shall erect and maintain a temporary silt fence. In wetlands and other resource areas, the Contractor shall line the limits of the construction easement with silt fences. The silt fence shall be used specifically to contain sediment from runoff water and to minimize environmental damage caused by construction.

C Erosion controls including haybales, siltfences, siltsocks and other erosion control measures shall be installed in accordance with Section 312500 EROSION CONTROL.

1.09 SOIL EROSION AND SEDIMENTATION CONTROLS

A The Contractor shall take effective measures during construction to minimize soil erosion and silting/sedimentation in the vicinity of construction areas.

B The Contractor shall not cause direct or indirect discharge of pollutants such as silt, clay, fuel oils, lubricants, cleaning agents, bitumen's, calcium chloride or any other material that may be hazardous or detrimental to watersheds, lakes, wetlands, beaches, marshes, streams, and public water, sewer and drain systems.

C Site generated drainage runoff whether due to storm run-off or the Contractor's dewatering and other operations shall not be allowed to shed on to the abutting properties.

D To reduce uncontrolled soil erosion, the site drainage runoff shall be conveyed through conduits, swales, gravel drains, etc., and disposed of in areas approved by the City.

E Site runoffs shall not be disposed of until silt, sediment and other deleterious materials have been removed through the use of hay bales, silt fences and other methods acceptable to the Engineer.

F During the course of construction, the Contractor shall, when directed, dispose, remove, relocate, or replace the hay bales and silt fences as directed by the Engineer. The Contractor shall also be fully responsible for removal and disposal of the collected sediment and debris behind the hay bales and silt fences as directed by the Engineer. The hay bales and silt fences shall remain in place until directed by the Engineer.

G Erosion control measures used for public water supply or fish culture must be adequate to ensure that turbidity in the receiving water will not be increased more than 10 standard turbidity units (s.t.u.) or as otherwise required by the State or other controlling body. In surface water used for other purposes, the turbidity must not exceed 25 s.t.u., unless permitted otherwise.

1.010 WATER HANDLING

A All water discharges from the Contractor's dewatering and/or water handling operations shall be filtered prior to being discharged into a receiving water.

B The water may be filtered through hay bales, a vegetative filter strip, or a vegetative channel. Discharge flow rate through these media shall not exceed one (1) foot per second. The sediment shall be cleared from the channel periodically.

C If water from dewatering operations is discharged over non-vegetated land, impermeable plastic sheeting must be laid over non-vegetated areas and sediment traps constructed at strategic locations to catch sediment.

D Any water discharged from the Contractor's operations must be at least equal in quality to the receiving water. If the quality of the water being discharged is unacceptable, the Contractor shall employ whatever measures necessary to provide an acceptable water quality.

E All existing drainage facilities including, but not limited to, brooks, streams, canals, channels, ditches, culverts, catch basins, and drainage piping shall be adequately safeguarded so as not to impede drainage or to cause siltation of downstream areas. If the Contractor damages or impairs any of the aforesaid drainage facilities, these shall be repaired immediately.

F All drainage appurtenances shall be designed to remove suspended solids, oils and other such material. Baled hay or straw must also be used to trap sediment and prevent clogging of drainage systems.

G If interruption of existing drainage flows is necessary, the Contractor shall provide, maintain, and operate all temporary facilities such as dams, pumping equipment and conduits etc. required to by-pass flows past the construction area.

1.011 DUST CONTROL

A During the progress of the work, the Contractor shall conduct operations to maintain a dust free environment. Measures to control dust may include sweeping and applying water to streets, as necessary, to minimize the air borne dust.

B At no time shall calcium chloride or other chemicals be used for dust control.

1.012 NOISE LEVEL REQUIREMENTS

A Equipment utilized by the Contractor shall conform to the General Services Administration Construction Noise Specifications, effective as of January 1, 1975, for stationary equipment. Equipment must not exceed 75 Db (A) when measured at a distance of 50 feet from the noise source. The Contractor shall construct sound enclosures or utilize other noise reduction techniques if the equipment does not meet the noise level requirements.

1.013 CLEAN AIR AND WATER POLLUTION CONTROL ACTS

A The Contractor is subject to the requirements of the Clean Air Act, as amended, 42 U.S.C. 1857 et.seg; the Federal Water Pollution Control Act, as amended, 33 U.S.C. 1251 et.seg; and the regulations of the Environmental Protection Agency with respect thereto, at CFR Part 15, as amended from time to time.

1. The Contractor agrees that any facility to be utilized in the performance of any non-exempt contract or sub-contract shall not be listed on the List of Violating Facilities issued by the Environmental Protection Agency (EPA) pursuant to 40CFR 15.20.

2. The Contractor agrees to comply with all the requirements of Section 114 of the Clean Air Act, as amended (42 U.S.C. 1857 c8) and Section 308 of the Federal Water Pollution Control Act, as amended (33 U.S.C. 1318), relating to inspection, monitoring, entry, reports, and information, as well as all regulation and guidelines issued thereunder.

END OF SECTION

INTENTIONALLY BLANK

SECTION 016000 USE AND CONTROL OF MATERIALS

1.01 DESCRIPTION

A The work under this Item shall conform to the relevant provisions of Section 6.00, of the Standard Specifications, requirements of this section and the work as shown or as directed by the Engineer.

1.02 MATERIALS - APPROVALS - INSPECTIONS

A Unless otherwise expressly specified, only new materials and equipment shall be incorporated in the works. All materials and equipment to be incorporated in the work shall be subject to inspections and tests by the Engineer. No material shall be installed, fabricated or delivered to the work site without prior concurrence of the Engineer.

B As soon as possible after execution of the Agreement, the Contractor shall submit to the Engineer the names and addresses of the manufacturers/suppliers of all materials and equipment to be incorporated into the work. The Contractor shall submit prior to the placement of orders, data in sufficient detail to enable the Engineer to determine whether the manufacturer and/or the supplier have the ability to furnish a product meeting the Specifications.

C The Contractor shall also submit data relating to the materials and equipment, including the optional items in sufficient detail to enable the Engineer to evaluate the particular product and to determine whether it conforms to the Contract requirements.

D The Contractor shall furnish promptly all labor, materials, laboratory and other facilities to perform all inspections and tests to determine the acceptability of equipment and materials.

E When directed by the Engineer, the Contractor shall submit samples of materials, equipment for quality workmanship, and other special test results as the Engineer deems necessary to assure conformance with the specifications. All samples shall be furnished, taken, stored, packed, and shipped by the Contractor as directed. The Contractor shall furnish the required laboratory services to test the samples at no additional cost to the City.

F All samples shall be labeled to indicate the materials, the name of the building or work and location from where the sample was taken, and the name of the Contractor submitting the sample.

G The Contractor shall submit data and samples, or place orders, sufficiently early to permit inspection and testing before the materials and equipment are needed for incorporation in the work. The consequences of failure to do so shall be the Contractor's sole responsibility.

H When required, the Contractor shall furnish to the Engineer in triplicate, certified copies of manufacturer's shop, mill tests, reports from independent testing laboratories and other relevant data for materials and equipment furnished under the contract.

1.03 HAULING, HANDLING, STORAGE AND DISTRIBUTION OF MATERIALS

A The Contractor shall handle and haul all materials furnished and remove all surplus materials at the completion of the work. The Contractor shall provide suitable and adequate storage for all equipment and materials and shall be responsible for any loss of or damage to any equipment or materials. The Contractor shall be responsible for all damages to the work under construction during its progress and until completion and acceptance even though partial payments have been made under the contract.

B All suitable excavated materials not reused as backfill shall remain the property of the City and shall be stockpiled at a site provided by the City, at the City's discretion. The Engineer will determine material suitability, and all excavated materials determined to be unsuitable, shall become property of the Contractor and shall be disposed of at no additional cost to the City.

C Cement, lime, salts and other such materials shall be stored above the ground, properly covered, and kept completely dry at all times. All structural, miscellaneous, reinforcing steel shall be stored above the ground to prevent accumulations of dirt or grease, and in a position to prevent accumulations of standing water and to minimize rusting. Beams shall be stored in a manner to prevent accumulations of dirt, standing water, staining, chipping or cracking. Bricks, block and similar masonry products shall be handled and stored to prevent breakage, chipping, cracking and spalling.

D All mechanical equipment subject to corrosive damage, if stored outdoors (even though covered by canvas), shall be stored in a building to prevent injury. The building may be a temporary structure on the site or elsewhere but it must be satisfactory to the Engineer.

E All materials which have become so damaged as to be unfit for the use intended as specified shall be promptly removed from the site of the work, and the Contractor shall receive no compensation for the damaged material or its removal.

F Storage and demurrage charges by transportation companies and vendors shall be borne by the Contractor.

1.04 MATERIALS AND EQUIPMENT REMOVED AND STORED

A All materials directed to be removed and stacked shall be carefully dismantled and stacked at designated locations, and hauled to the City maintenance yard as directed by the Engineer.

B An inventory of materials to be delivered shall be made out by the Contractor, countersigned by the Engineer, and submitted to the person and/or persons receiving the materials at the DPW Yard.

C If the Engineer determines that any part of the stacked materials are unsuitable for re-use, or if the City decides to abandon part or all or such materials, said materials shall become the property of the Contractor and these materials/equipment shall be disposed of at no additional cost to the City.

1.05 REJECTED MATERIALS AND DEFECTIVE WORK

A Materials furnished by the contractor and condemned by the Engineer as unsuitable or not in conformance with the specifications shall forthwith be removed from the site and shall not be used elsewhere on the project.

B Any errors, defects or omissions in the execution of the work or in the materials furnished by the Contractor, even though they may have been approved, overlooked, discovered after installation, or already paid for, shall be forthwith rectified satisfactorily at the Contractor's expense.

END OF SECTION

INTENTIONALLY BLANK

SECTION 017700 PROJECT CLOSEOUT

PART 1 GENERAL

1.01 DESCRIPTION:

A The Contractor must employ at all times during the progress of his work adequate cleanup measures and safety precautions to prevent injuries to persons or damage to property. The Contractor shall immediately, upon direction by the Engineer provide adequate material, equipment and labor to cleanup and make safe any and all areas deemed necessary by the Engineer.

1.02 RELATED WORK:

A Section 00700 GENERAL CONDITIONS
B Section 011700 SPECIAL PROVISIONS
C Section 015000 CONTROL OF WORK
D Section 015700 ENVIRONMENTAL PROTECTION

PART 2 PRODUCTS

NOT APPLICABLE

PART 3 EXECUTION

3.01 DAILY CLEANUP:

A The Contractor shall clean up, at least daily, all refuse, rubbish, scrap and surplus material, debris and unneeded construction equipment resulting from the construction operations and sweep the area. The site of the work and the adjacent areas affected thereby shall at all times present a neat, orderly and workmanlike appearance.

B Upon written notification by the Engineer, the Contractor shall within 24 hours clean up those areas, which in the Engineer's opinion are in violation of this section and the above referenced sections of the specifications.

C If in the opinion of the Engineer, the referenced areas are not satisfactorily cleaned up, all other work on the project shall stop until the cleanup is satisfactory.

3.02 MATERIAL OR DEBRIS IN DRAINAGE FACILITIES:

A Where material or debris has washed or flowed into or has been placed in existing watercourses, ditches, gutters, drains, pipes, structures, such material or debris shall be entirely removed and satisfactorily disposed of during progress of the work, and the ditches, channels, drains, pipes, structures, and work shall, upon completion of the work, be let in a clean and neat condition.

3.03 REMOVAL OF TEMPORARY BUILDINGS, STRUCTURES AND EQUIPMENT:

A On or before completion of the work, the Contractor shall, unless otherwise specifically directed or permitted in writing, tear down and remove all temporary buildings and structures built by him; shall remove all temporary works, tools and machinery or other construction equipment furnished by him; shall remove all rubbish from any grounds which he has occupied; shall remove silt fences and hay bales used for trapping sediment; and shall leave the roads and all parts of the property and adjacent property affected by his operations in a neat and satisfactory condition.

3.04 RESTORATION OF DAMAGED PROPERTY:

A The Contractor shall restore or replace, when and as directed, any property damaged by his work, equipment or employees, to a condition at least equal to that existing immediately prior to the beginning of operations. To this end the Contractor shall do as required all necessary highway or driveway, walk and landscaping work. Materials, equipment, and methods for such restoration shall be as approved by the Engineer.

3.05 FINAL CLEANUP:

A Before acceptance by the Owner, the Contractor shall perform a final cleanup to bring the construction site to its original or specified condition. This cleanup shall include removing all trash and debris off the premises. Before acceptance, the Engineer shall approve the condition of the site.

END OF SECTION

SECTION 010000 GENERAL REQUIREMENTS

PART 1 – GENERAL

1.1 DESCRIPTION

A. This Section specifies the general requirements for the site work included in the Contract.

B. These requirements supplement those contained in the Standard General Conditions of the Construction Contract and their Supplemental Conditions.

C. References are included in this Section to Articles of the General Conditions to call the Contractor's attention to frequently needed requirements.

1.2 PERMITS

A. Unless otherwise provided in the Supplementary Conditions, Contractor shall obtain and pay for all construction permits and licenses. Owner shall assist Contractor, when necessary, in obtaining such permits and licenses. Contractor shall pay all charges and inspection fees necessary for the prosecution of the Work, and shall pay all charges of utility owners for connections to the Work.

1.3 LAWS AND REGULATIONS

A. Contractor shall give all notices and comply with all Laws and Regulations applicable to furnishing and performance of the Work.

B. If Contractor performs any work that is contrary to Laws or Regulations, Contractor shall bear all claims, costs, losses and damages caused by, arising out of or resulting therefrom.

1.4 UTILITIES

A. Shown or Indicated: The information and data shown or indicated in the Contract Documents with respect to existing Underground Facilities at or contiguous to the site is based on information and data furnished to OWNER or ENGINEER by the owners of such Underground Facilities or by others.

Owner and Engineer shall not be responsible for the accuracy or completeness of any such information or data; and

The cost of all of the following will be included in the Contract and Contractor shall have full responsibility for: (i) reviewing and checking all such information and data, (ii) locating all Underground Facilities shown or indicated in the Contract Documents, (iii) coordination of the Work with the owners of such Underground Facilities during construction, and (iv) the safety and protection of all such Underground Facilities and repairing any damage thereto resulting from the Work.

Not Shown or Indicated: If an Underground Facility is uncovered or revealed at or contiguous to the site which was not shown or indicated in the Contract Documents, Contractor shall, promptly after becoming aware thereof and before further disturbing conditions affected thereby or performing any Work in connection therewith (except in an emergency), identify the owner of such Underground Facility and give written notice to that owner and to Owner and Engineer. Engineer will promptly review the Underground Facility and determine the extent, if any, to which a change is required in the Contract Documents

to reflect and document the consequences of the existence of the Underground Facility. If Engineer concludes that a change in the Contract Documents is required, revised plans and specifications will be issued, to reflect and document such consequences. During such time, Contractor shall be responsible for the safety and protection of such Underground Facility.

B. Contractor shall notify all municipal agencies and utility companies owning or operating utilities, of proposed work affecting the utilities, or agencies.

C. Contractor shall give written notification within the time period required by the agency or company for advance notification. A copy of the notification shall be furnished to the Engineer.

D. Contractor shall notify "DIG SAFE" before commencing any work in the vicinity of existing subsurface utilities.

E. Contractor shall secure in place existing utilities whose support is affected by the work and cooperate and assist the agency or company operating the utility in maintaining the utility services. Contractor shall correct any damage to the utilities caused by construction operations by repair, or replacement, as required by the utility Owner. When the repair or replacement is made by the utility Owner, Contractor shall pay all costs assessed by the utility Owner for the work.

F. If the existing utilities are found to conflict with the proposed work, the Contractor shall protect and maintain the utilities and take measurements to determine the location, type and dimensions of the utility. The information shall be furnished to the Engineer who will determine the changes required in the proposed work or existing utilities to resolve the conflict as soon thereafter as is reasonable.

G. Contractor to verify the location, size, invert elevation and type of existing facilities at all points of connection prior to ordering new utility materials.

1.5 SOILS INFORMATION

A. A geotechnical report on site soil conditions has been prepared for the Owner. Refer to Section 311400 Earth Stripping and Stockpiling for information about and the use of the geotechnical report.

B. The geotechnical report and the soils data are furnished to contractor for informational purposes only and are specifically not a part of these Contract Documents. The Owner does not guarantee that the information is representative of all soils, rock and other materials that may be encountered on the site.

C. Contractor may make additional subsurface explorations upon written request to, and upon approval by, the Owner at no additional cost to the Owner.

1.6 SOIL SUPPORT

A. Contractor shall furnish and install excavation soil support devices or use soil strengthening techniques required to perform excavations in accordance with the current requirements of the Department of Labor, Occupational Health and Safety Administration and all State and Municipal laws and regulations.

1.7 REFERENCE STANDARDS

A. References are made to technical societies, organizations and groups using the following abbreviations. All work so referred shall conform to the current edition of the referenced standard.

GENERAL REFERENCE STANDARDS

AASHTO	American Association of State Highway Transportation Officials
ACI	American Concrete Institute
ACOE	United States Army Corps of Engineers
AOAC	Association of Official Agricultural Chemists
AGC	Associated General Contractors of America
ANSI	American National Standards Institute
ASTM	American Society for Testing and Materials
AWPA	American Wood Preservers Association
AWWA	American Water Works Association
NEMA	National Electrical Manufacturers Association
NEWWA	New England Water Works Association
OSHA	Occupational Safety and Health Administration
UL	Underwriters Laboratory

1.8 TRAFFIC MAINTENANCE

A. Contractor shall maintain access to the site and through the work zones for personnel and vehicles of emergency services, utility agencies, inspection services and others authorized to enter, move about and work on the site.

B. When work is required on public roadways, Contractor shall furnish, install, maintain and remove all signs, drums, barricades, steel plates and other devices required by the State or municipality to maintain and protect pedestrians and vehicular traffic.

C. Protective measures shall be installed at site access points to prevent mud and other debris from being deposited on the public roadways by construction traffic. The public roadways shall be swept as required to remove any deposits.

1.9 STATE AND LOCAL REFERENCE STANDARDS

A.

Building Code	Commonwealth of Massachusetts Building Code
BWSC	Boston Water and Sewer Commission
DEP	Massachusetts Department of Environmental Protection
MHD	Massachusetts Department of Transportation Highway Division
MWRA	Massachusetts Water Resources Authority

END SECTION 010000

INTENTIONALLY LEFT BLANK

SECTION 055000 METAL FABRICATIONS

PART 1 – GENERAL

1.1 DESCRIPTION

A. This Section covers the furnishing, handling and installation of aluminum and stainless steel stop logs.

B. Stop logs where shown in the plans and specifications and listed in the stop log schedule. The stop logs shall be aluminum embedded or surface mounted type as called out by the specifications and site drawings.

C. Equipment provided shall be fabricated, assembled and placed in proper operating condition per the drawings, specifications, engineering data, instructions and recommendations of the log manufacturer unless otherwise noted by the Engineer. The stop log assemblies shall be supplied with all parts and accessories including but not limited to appurtenant seals, guides, frame, lifting lugs, accessories and a lifting device as specified within the site specifications and drawings and as required for a complete installation. All stop logs and frames shall be furnished by the same manufacturer.

D. Log shall be one-piece extruded aluminum or stainless steel and deflection shall not exceed 1/360 of the span under the design head. Each log is designed with a dual J-seal and holder configuration for maximum sealing at the flushbottom and between each log. Stop logs are guide inserted and removed by means of a lanyard type lifter that is overhead crane operated. A latching device is provided on the lifter to engage and disengage the stop log pins. One lifter shall be provided for each width log assembly.

1.2 SUBMITTALS

A. Six sets of manufacturer's literature on the materials, performance and testing shall be submitted to the Engineer for review.

B. Manufacturer's data and drawings shall be submitted for approval in accordance with site specifications and engineering drawings. Manufacturer's submittal shall include but not limited to stop log material specification sheet, stop log data summary sheet, site plan drawings and paint/coating data sheets.

C. Manufacturers shall submit as a minimum a list of ten projects with stop log installations. The list shall include project name, contact, telephone number, years of service, size and method of operation.

1.3 DELIVERY, STORAGE AND HANDLING

A. All materials shall be adequately protected from damage during transit. Stop logs and any associated appurtenances shall not be dropped.

B. All stop logs and other appurtenances shall be inspected before placement in the work and any found to be defective from any cause, including damage caused by handling, and determined by the Engineer to be unrepairable, shall be replaced at no cost to the Owner.

C. Storage and handling of stop logs and other system appurtenances shall be in accordance with the manufacturer's recommendations.

1.4 INSPECTION

A. The manufacturer/supplier is responsible for the provision of all test requirements specified for each type of stop log. Each stop log shall be fully assembled and shop-inspected for proper seating. Each log shall be inserted in its guide system to ensure proper fit and seal. In addition, any structure may be inspected at the plant for compliance with these specifications by an independent testing laboratory selected and paid by the Owner. The Contractor shall require the manufacturer's cooperation in these inspections.

B. Inspection of the structures may also be made after delivery. The stop log shall be subject to rejection at any time on account of failure to meet any of the specification requirements, even though structure samples may have been accepted as satisfactory at the place of manufacture. Stop logs rejected after delivery shall be marked for identification and shall be removed from the site at once.

1.5 PERFORMANCE

A. Stop logs shall be designed and shop tested. Design and operating heads shall be per the site schedule and/or specifications.

B. The bottom of the log shall be extruded in a way to accept a specially extruded resilient seal to provide a flush bottom closure. The shape of the lip seal shall provide a seating surface having a minimum width of 1". The vertical face of the seal shall be in contact with the seating surface of the guide or seal located on the frame to provide a proper seal at the corners. End caps will not be allowed on the stop logs. Logs to be of sufficient weight to be submerged under their own weight.

PART 2 – PRODUCTS

2.1 ACCEPTABLE MANUFACTURERS

A. Stop logs shall be manufactured by: Rodney Hunt Company, Coldwell-Wilcox, WACO Environmental or approved equal.

2.2 MATERIALS

A. All materials will comply with applicable provisions and recommendations of the following, except as otherwise shown or specified:

1. Frame, logs – ASTM B209, B308, Alloy 6061, 5052

2. Fasteners – ASTM A276 Type 304 or 316 Stainless Steel

3. Seals:

i. Bottom: HY-Q, Neoprene ASTM D2000 50-60 Durometer, Grade AA625

ii. Sides: J-Seal, Neoprene ASTM D2000 50-60 Durometer, Grade 2BC515

4. Lifter – A36 steel, 6061/5052 Aluminum, 304(L) or 316(L) Stainless Steel

C. Guides shall be of fabricated and/or extruded Aluminum Type 6061/5052, type 304(L) or 316(L) stainless steel. Guides are designed for embedding in or surface mounting to concrete. Surface

mounted guides shall be mounted using a type 304 or 316 stainless steel anchor system. The guide channel is vertically lined front and rear with 50/60 durometer neoprene seals or Ultra-High Molecular Weight (UHMW) polyethylene to maximize leakage control both seating and unseating. Guides shall be provided per plans, specifications and/or schedule. Guides shall be designed and constructed to withstand the total thrust caused by water pressure seating and unseating.

D. Steel components if any such as the lanyard lifter shall receive manufacturer's standard TNEMEC series N140-1255 pota-pox beige and TNEMEC series 69 pond 28BL finish prior to shipment. Total system shall be 12-16 mils DFT.

E. The lifting device shall be provided for each stop log width. The lifting device shall be equipped with suitable connecting points for crane operation. The device shall be guided by the slot of the guide extrusion and shall be capable of securing and releasing the stop logs with the use of a lanyard from the operating floor.

PART 3 EXECUTION

3.1 INSTALLATION

A. Installation shall be in complete accordance with manufacturer's instructions and recommendations as well as the specifications and site drawings. Anchor bolts will be set in accordance with approved manufacturer's drawings.

END SECTION 055000

INTENTIONALLY LEFT BLANK

SECTION 311000 – SITE CLEARING

PART 1 – GENERAL

1.1 RELATED DOCUMENTS

A. Other specification Sections which directly relate to the work of this Section include:

1. Section 311101 – Demolition
2. Section 311400 – Earth Stripping and Stockpiling
3. Section 312300 – Excavation and Fill
4. Section 312500 – Erosion Control

1.2 SUMMARY

A. This Section specifies requirements for site clearing.

B. The work includes:

1. Clearing and grubbing
2. Protection of existing vegetation to remain
3. Selective clearing and thinning
4. Disposal of material from clearing, grubbing and thinning in approved off-site disposal areas

1.3 SITE CONDITIONS

A. Site conditions existing during the bidding period will be maintained by the Owner insofar as practical.

B. Actual site condition variations that differ from those of the bidding period that affect site preparation operations shall be brought to the attention of the Owner prior to the commencement of any site work.

1.4 ACTION SUBMITTALS

A. The Contractor shall submit the following information to the Engineer for review before commencing any site or demolition work:

1. All permits and notices authorizing site clearing and earthwork
2. Permits for transport and disposal of debris
3. Site clearing procedures and operational sequence

4. Calculations

5. Product Data: For each type of product indicated

PART 2 – PRODUCTS

2.1 TREE PROTECTION FENCING

A. Tree protection fencing shall be orange plastic web fence, 6 feet high minimum. Wood stakes shall be six-foot long by 1 inch by 1 inch square driven a minimum of two feet into the ground. Posts shall be spaced four feet (maximum) on center.

PART 3 – EXECUTION

3.1 CLEARING AND GRUBBING

A. Clearing shall include cutting, removal, and off-site disposal of trees, bushes, shrubs, stumps, fallen timber, refuse, trash, fencing and other incidental materials not required for reuse on the site.

B. The Contractor shall grub the area within the clearing limits to completely remove stumps and root systems, except for those to remain or to be transplanted.

C. Depressions, excavations and voids resulting from the removal of stumps or roots shall be filled with suitable material and compacted as specified under Section 312300 – Excavation and Fill.

3.2 SELECTIVE CLEARING AND THINNING

(NOT USED)

3.3 PROTECTION

A. The Contractor shall flag the limits of clearing shown on the drawings by accurate field survey with marked stakes or other means acceptable to the Engineer. Trees to remain and trees to be saved and transplanted shall be clearly identified during this staking process. The Engineer shall be notified a minimum of five working days prior to scheduled commencement of clearing operations to review the flagged limits. Adjust the clearing limits as directed by the Engineer.

B. Before clearing begins, protect designated trees to remain with tree protection fencing to the approximate diameter of foliage to prevent damage to the trunk, foliage and root system by construction equipment and procedures. Trees to be transplanted may be removed to another location as detailed in Section 0329600, or may be left in place and be protected in similar fashion as the trees to remain as described above.

C. Place tree protection fencing as required to protect other plants, adjacent property areas to remain uncleared, monuments and existing improvements from damage.

D. The Contractor shall repair or replace immediately any damage to existing trees or root systems that are to remain and to trees that are to be transplanted. The Contractor shall employ an arborist licensed in the Commonwealth of Massachusetts to determine the repair and replacement needs and methods for approval by the Engineer.

E. Replace damaged shrubs and other vegetation designated to remain with the same size and species.

F. The tree protection fencing shall be maintained for the duration of construction operations. The work shall include immediate replacement of any damaged fence. Fencing shall be removed from the site at the completion of construction operations. The fencing disposal shall be in accordance with local, state and federal laws and regulations for the disposal of the material.

END SECTION 311000

INTENTIONALLY LEFT BLANK

SECTION 311101 – DEMOLITION

PART 1 – GENERAL

1.1 RELATED DOCUMENTS

A. Other specification Sections which directly relate to the work of this Section include:

1. Section 311000 – Site Clearing
2. Section 311400 – Earth Stripping and Stockpiling
3. Section 312300 – Excavation and Fill
4. Section 312500 – Erosion Control

1.2 SUMMARY

A. This Section specifies requirements for building, utility and structure demolition.

B. The work includes:

1. Demolition of structures, retaining walls, signage, light standards, foundations and appurtenances
2. Removal and abandonment of utilities
3. Filling or removal of underground tanks and piping
4. Filling of voids and excavations resulting from the work
5. Disposal of material from demolition in approved off-site disposal areas

1.3 SITE CONDITIONS

A. Site conditions existing during the bidding period will be maintained by the Owner insofar as practical.

B. Actual site condition variations that differ from those of the bidding period that affect site preparation operations shall be brought to the attention of the Owner prior to the commencement of any site work.

1.4 ACTION SUBMITTALS

A. The Contractor shall submit the following information to the Engineer for review before commencing any site or demolition work:

1. All permits and notices authorizing demolition
2. Certificates of utility service severances
3. Permits for transport and disposal of debris

4. Demolition procedures and operational sequence

5. Calculations

6. Product Data: For each type of product indicated

7. DEP Form BWP AQ06 Notification Prior to Construction or Demolition

PART 2 – PRODUCTS

(NOT USED)

PART 3 – EXECUTION

3.1 UTILITIES

A. Notify all corporations, companies, individuals or local authorities owning, or having jurisdiction over, utilities running to, through or across areas to be affected by demolition operations.

B. Locate and identify existing utilities that are to remain and protect them from damage.

C. Have all discontinued utility services disconnected in accordance with the requirements of the utility owner.

3.2 DEMOLITION REQUIREMENTS

A. Conduct demolition operations in a manner that will prevent damage to adjacent structures, utilities, pavements and other facilities to remain.
The Contract is alerted to specifically address Section 3310.1, 3310.2 and 3310.3 of the Massachusetts Building Code.

1. 3310.1 Notice of Intent: The person intending to cause a demolition or an excavation shall deliver *written* notice of such intent to the owner of each potentially affected adjoining *lot*, building or structure at least one week prior to the commencement of work. The notice shall request license to enter the potentially affected *lot*, building or structure prior to the commencement of work and at reasonable intervals during the work to inspect and preserve the *lot*, building or structure from damage.

2. 3310.2 Protection of Adjoining Property: If afforded the necessary license to enter the adjoining *lot*, building or structure, the person causing the demolition or excavation to be made shall at all times and at his or her own expense preserve and protect the *lot*, building or structure from damage or injury. If the necessary license is not afforded, it shall be the duty of the owner of the adjoining *lot*, building or structure to make safe his or her own property, for the prosecution of which said owner shall be granted the necessary license to enter the premises of the demolition or excavation.

3310.2.1 Removal of Debris: All waste materials shall be removed in a manner which prevents injury or damage to persons, adjoining properties and public rights-of-way.

3. 3310.3 Notice to the Code Official: If the person causing a demolition or excavation to be made is not afforded license to enter an adjoining structure, that person shall immediately notify in *writing* both the code official and the owner of the adjoining property that the responsibility of providing support to the adjoining *lot* building or structure has become the exclusive responsibility of the owner of the adjoining property.

B. Cease operations immediately if any damage, settlement or other adverse effect on adjacent structures occurs. However, if an obvious unsafe condition is created that would potentially cause injury to persons or undue harm to properties, the Contractor shall take whatever measures are warranted to prevent such injury or harm. Immediately notify the Owner, Engineer and regulatory authorities. Do not resume operations until conditions are corrected, damage repaired and approval has been received from the appropriate authorities and Owner's Representative.

C. Obtain written permission from adjacent property owners when demolition equipment will traverse, infringe upon or affect access to their property. Copies of the permission documents shall be submitted to the Engineer.

D. Provide hoses and water connections. Spray water on demolition debris to minimize dust.

E. Clean adjacent structures and improvements of dust, dirt, and debris caused by demolition operations. Return adjacent areas to condition existing prior to start of work.

F. All hazardous waste removal shall be performed by a hazardous waste Contractor qualified and duly licensed by the [Commonwealth of Massachusetts] to remove, transport and dispose of each type of hazardous substance.

G. Comply with state and local regulations pertaining to the crushing, processing, and reuse of Asphalt, Brick and Concrete Rubble. Mass. 310 CMR 16.05(3)(e)

3.3 DEMOLITION

A. Demolish buildings completely and remove from site, or remove intact, in accordance with the approved permits, procedures and operational sequence.

B. Locate demolition equipment and remove materials in a manner that prevents excessive loading to supporting walls, floors, or framing.

C. Remove all debris and other materials from basement areas.

D. The Contractor may break up and leave in place concrete floor slabs that are 4 or more feet below finished grade. Remove all concrete foundations and floors within 4 feet of finished grade.

3.4 FILLING VOIDS

A. Completely fill all voids including, but not limited to, basement areas, excavation areas, and voids resulting from demolition or removal of structures including underground fuel storage tanks, wells and cisterns with suitable material as specified in Section 312300 – Excavation and Fill.

B. Areas to be filled shall be free of standing water, frost, frozen, and unsuitable material prior to fill placement.

C. Place and compact fill materials in conformance with the requirements of Section 312300 - Excavation and Fill.

D. Grade filled area surface to match adjacent grades and slope to provide surface drainage.

3.5 REMOVAL AND ABANDONMENT OF UTILITIES

A. All existing structures, utilities, and appurtenances of any kind shall be completely removed within the limits of excavation for the new buildings and stormwater management features including but not limited to infiltration structures and basins, underground detention facilities and bioretention basins.

B. Outside the limits of excavation for the new buildings, all abandoned utilities and utility structures greater than 8 inches in diameter located at least 4 feet below bottom of finished grade shall be sealed with concrete or brick masonry at the limit of excavation. All utilities shall be entirely removed within 4 feet of finished grade.

C. Manholes and catch basins designated to be abandoned shall have all lines plugged with brick and mortar prior to filling with sand or gravel. The top 4 feet of these structures shall be removed and the bottom slab broken up prior to filling.

D. The Contractor shall remove frames, covers, and grates from manholes, catch basins and gate valves and satisfactorily store and protect them until they are required for reuse in the work. Existing frames, covers and grates determined by the Engineer to be unsuitable for reuse shall be removed from the site.

3.6 DISPOSAL OF DEMOLISHED MATERIALS

A. Remove from site all materials resulting from demolition operations.

B. No burning of any material will be allowed.

END OF SECTION 311101

SECTION 311400 EARTH STRIPPING AND STOCKPILING

PART 1 – GENERAL

1.1 DESCRIPTION

A. Provide facilities, labor, materials, tools, equipment, appliances, transportation, supervision, and related work necessary to complete the work specified in this section, and as shown on the Drawings.

B. Work performed under this section of the specifications shall be subject to the General Conditions, Supplementary Conditions and Division 1 General Provisions of the Contract Documents.

C. The work of this section includes but is not necessarily limited to:

1. The removal, hauling and stockpiling of suitable excavated materials for subsequent use in the work. Stockpiling shall include protection to maintain materials in a workable condition.

2. Rehandling, hauling and placing of stockpiled materials for use in refilling, filling, backfilling, grading and such other operations.

3. Protect and preserve all existing buildings, pavements, and utilities to remain.

4. Environmental controls.

5. Obtain all required permits, licenses, and approvals of appropriate municipal and utility authorities, prior to commencing the work of this Section, and pay costs incurred therefrom.

6. Providing products in sufficient quantities to meet the project requirements.

D. Provide facilities, labor, materials, tools, equipment, appliances, and related work necessary to provide and maintain erosion control during construction operations. All erosion control measures shall be installed prior to earthwork operations and shall be maintained according to plans and other sections of the specifications.

E. Contractor shall be responsible for notifying all affected utility companies and Dig Safe before starting work.

1.2 RELATED DOCUMENTS

A. Carefully examine all of the Contract Documents for requirements which affect the work in this section. Other specification sections which directly relate to the work of this section include, but are not limited to, the following:

1. Section 010000 – General Requirements

2. Section 311000 – Site Clearing

3. Section 311101 – Demolition

4. Section 312300 – Excavation and Fill
5. Section 312313 – Subgrade Preparation
6. Section 312319 – Dewatering
7. Section 312500 – Erosion Control
8. Section 321216 – Asphalt Paving
9. Section 329200 – Turfs and Grasses
10. Section 334100 – Storm Utility Drainage Piping
11. Section 334276 – Storm Drainage Ponds and Reservoirs
12. Section 334900 – Storm Utility Drainage Structures

1.3 LAWS AND REGULATIONS

A. Work shall be accomplished in accordance with regulations of local, county and state agencies and national or utility company standards as they apply.

1.4 QUALITY ASSURANCE

A. The Owner may retain and pay for the services of an independent testing and inspection firm and/or a Geotechnical Consultant to perform on-site observation and testing during the various phases of the construction operations. The scope of services will be determined by the Owner and the independent testing and inspection firm and/or the Geotechnical Consultant and will be provided to the contractor. The Owner reserves the right to modify or waive the services of the independent testing and inspection firm and/or the Geotechnical Consultant. The services of a Geotechnical Consultant/Inspection and testing firm may include, but not necessarily be limited to, the following:

1. Observation during excavation and dewatering of building and controlled fill areas.
2. Laboratory testing and analysis of fill materials as specified herein and proposed by the Contractor for incorporation into the Work.
3. Observation of construction and performance of water content, gradation and compaction tests at a frequency and locations that he shall select. The results of these tests will be submitted to the Owner, Engineer, and Contractor on a timely basis so that action can be taken to remedy indicated deficiencies. During the course of construction, the Geotechnical Consultant will advise the Owner in writing if at any time in his opinion the Work hereunder is of unacceptable quality. Failure of Geotechnical Consultant to give notice, shall not excuse the Contractor from latent defects discovered in his work.

B. The Contractor shall make provisions for allowing observations and testing of Contractor's Work by the independent testing and inspection firm and/or the Geotechnical Consultant.

The presence of the independent testing and inspection firm and/or the Geotechnical Consultant does not include supervision or direction of the actual work of the Contractor, his employees or

agents. Neither the presence of the independent testing and inspection firm and /or the Geotechnical Consultant, nor any observations and testing performed by them, nor failure to give notice of defects shall excuse the Contractor from defects discovered in his work.

C. Costs related to retesting due to unacceptable qualities of work and failures discovered by testing shall be paid for by the Contractor at no additional expense to Owner, and the costs thereof will be deducted by the Owner from the Contract Sum.

D. Whenever floodplain compensation areas are designated on the plans, grading elevations are to be considered critical to the floodplain volumetric calculations and shall be constructed by the Contractor in strict conformance with the indicated grades.

1.5 SUBMITTALS

A. For use of fabrics or geogrids, submit manufacturer's literature for approval by the Engineer.

1.6 COORDINATION

A. Prior to start of earthwork the Contractor shall arrange an on-site meeting with the Engineer, the independent testing firm, and the Geotechnical Consultant for the purpose of establishing the Contractor's schedule of operations and scheduling observation and testing procedures and requirements.

B. As construction proceeds, the Contractor shall be responsible for notifying the Engineer prior to the start of earthwork operations requiring observation and/or testing.

1.7 SUBSURFACE SOIL DATA

(NOT PART OF CONTRACT DOCUMENTS)

PART 2 - PRODUCTS

2.1 MATERIALS

A. Filter Fabric/Geotextiles

1. Geotextile Fabric shall be used to prevent soil intrusion into drains and/or assist in stabilizing soil subgrades to be laid on approved soil subgrades prior to placement of fill materials.

a) Contractor shall use TenCate Mirafi® 140N or equivalent filter fabric in drainage recharge systems, underdrain systems between crushed stone and granular soils, leaching areas or where indicated on the plans.

2.2 USE OF MATERIALS

Use of materials shall be as described below and as shown on the plans. Further details can be found in the project plans. Combinations or layering of materials may be necessary in certain instances such as for detention embankments, subsurface disposal areas, and riprap walls as examples.

Filter Fabric/Geotextiles: To be used as filter barriers between drainage recharge systems, underdrain systems, wastewater absorption systems, and between natural earth material and backfill or other materials to assist in stabilizing soil subgrades.

PART 3 EXECUTION

3.1 CLEARING AND GRUBBING

A. Cut and remove trees, remove stumps and brush. Legally dispose of off-site.
Disposal of woodwaste in Massachusetts is regulated under 310 CMR 16.05 and 310 CMR 19.120. Woodwastes may be chipped and shredded on-site and reused on-site with permission of the Engineer.

B. Strip all topsoil, subsoil and other unsuitables to its full depth within the Contract limits. In building areas, limits of excavation are defined in Section 3.03 B.

C. Under pavement areas, unsuitable materials shall be removed and disposed of by the Contractor in an Approved location, or if no Approved location exists on site to an Approved off site location and replaced with structural fill. Treatment of existing fill and removal of topsoil, subsoil and stumps are defined in Section 3.03 B.8. These materials shall be processed to remove all roots, stones larger than 3/4 inch in diameter and other deleterious materials. Stockpile as approved by the Engineer. Protect the topsoil from contamination by other materials.

D. Other Specification sections shall apply to clearing and grubbing under demolition and shall include air quality, erosion control and hazardous waste.

E. Remove all topsoil, subsoil, vegetative matter, and non-soil materials and, after screening out the roots, rocks greater than ¾ inch in size, and deleterious debris, separately stockpile the topsoil and subsoil materials.

END SECTION 311400

SECTION 312300 EXCAVATION AND FILL

PART 1 – GENERAL

1.1 DESCRIPTION

A. Provide facilities, labor, materials, tools, equipment, appliances, transportation, supervision, and related work necessary to complete the work specified in this section, and as shown on the Drawings.

B. Work performed under this section of the specifications shall be subject to the General Conditions, Supplementary Conditions and Division 1 General Provisions of the Contract Documents.

C. The work of this section includes but is not necessarily limited to:

1. Excavation, fill, and backfill, as indicated or required, including compaction.

2. Excavation, as required, to the lines and grades indicated on the Drawings.

3. Excavation and offsite disposal of unsuitable or excess materials unless on-site locations are designated. Excavation shall include removal and satisfactory disposal of all unclassified material encountered throughout the site.

4. Rough grading, including placement, moisture conditioning and compaction of fills and backfill.

5. Placement of base and subbase course materials under structures, pavements, slabs and footings, including compaction.

6. Trench excavation, bedding and backfill for structures, foundations, and utilities, including compaction.

7. Furnishing and installing all sheeting, shoring, and bracing of structural and trench excavations and its satisfactory removal, unless otherwise directed to have it remain in place.

8. Protect and preserve all existing buildings, pavements, and utilities to remain.

9. Environmental controls.

10. Obtain all required permits, licenses, and approvals of appropriate municipal and utility authorities, prior to commencing the work of this Section, and pay costs incurred therefrom.

11. Providing adequate pumping and drainage facilities to keep the work area sufficiently dry.

12. Providing products in sufficient quantities to meet the project requirements.

13. Test pits.

D. Provide facilities, labor, materials, tools, equipment, appliances, and related work necessary to provide and maintain erosion control during construction operations. All erosion control

measures shall be installed prior to earthwork operations and shall be maintained according to plans and other sections of the specifications.

E. Contractor shall be responsible for notifying all affected utility companies and Dig Safe before starting work.

1.2 RELATED DOCUMENTS

A. Carefully examine all of the Contract Documents for requirements which affect the work in this section. Other specification sections which directly relate to the work of this section include, but are not limited to, the following:

1. Section 010000 – General Requirements
2. Section 311000 – Site Clearing
3. Section 311101 – Demolition
4. Section 312300 – Excavation and Fill
5. Section 312313 – Subgrade Preparation
6. Section 312319 – Dewatering
7. Section 312500 – Erosion Control
8. Section 321216 – Asphalt Paving
9. Section 329000 – Planting
10. Section 329200 – Turfs and Grasses
11. Section 334100 – Storm Utility Drainage Piping
12. Section 334726 – Storm Drainage Ponds and Reservoirs
13. Section 334900 – Storm Utility Drainage Structures

1.3 LAWS AND REGULATIONS

A. Work shall be accomplished in accordance with regulations of local, county and state agencies and national or utility company standards as they apply.

1.4 QUALITY ASSURANCE

A. The Owner may retain and pay for the services of an independent testing and inspection firm and/or a Geotechnical Consultant to perform on-site observation and testing during the various phases of the construction operations. The scope of services will be determined by the Owner and the independent testing and inspection firm and/or the Geotechnical Consultant and will be provided to the contractor. The Owner reserves the right to modify or waive the services of the independent testing and inspection firm and/or the Geotechnical Consultant. The services of a Geotechnical Consultant/Inspection and testing firm may include, but not necessarily be limited to, the following:

1. Observation during excavation and dewatering of building and controlled fill areas.

2. Laboratory testing and analysis of fill materials as specified herein and proposed by the Contractor for incorporation into the Work.

3. Observation of construction and performance of water content, gradation and compaction tests at a frequency and locations that he shall select. The results of these tests will be submitted to the Owner, Engineer, and Contractor on a timely basis so that action can be taken to remedy indicated deficiencies. During the course of construction, the Geotechnical Consultant will advise the Owner in writing if at any time in his opinion the Work hereunder is of unacceptable quality. Failure of Geotechnical Consultant to give notice, shall not excuse the Contractor from latent defects discovered in his work.

B. The Contractor shall make provisions for allowing observations and testing of Contractor's Work by the independent testing and inspection firm and/or the Geotechnical Consultant.

The presence of the independent testing and inspection firm and/or the Geotechnical Consultant does not include supervision or direction of the actual work of the Contractor, his employees or agents. Neither the presence of the independent testing and inspection firm and /or the Geotechnical Consultant, nor any observations and testing performed by them, nor failure to give notice of defects shall excuse the Contractor from defects discovered in his work.

C. Costs related to retesting due to unacceptable qualities of work and failures discovered by testing shall be paid for by the Contractor at no additional expense to Owner, and the costs thereof will be deducted by the Owner from the Contract Sum.

D. Whenever floodplain compensation areas are designated on the plans, grading elevations are to be considered critical to the floodplain volumetric calculations and shall be constructed by the Contractor in strict conformance with the indicated grades.

1.5 SUBMITTALS

A. Submit, in an airtight container for the testing laboratory, a 50-pound sample of each type of off-site fill material that is to be used at the site. Submit samples a minimum of one week prior to use of proposed material at the site. Submit samples to the testing laboratory and the Geotechnical Consultant (copy of these transmittal forms shall be sent to Engineer) or if no testing and/or Geotechnical Consultant is identified then the Engineer shall be the recipient of the samples. Use of these proposed materials by the Contractor prior to testing and approval shall be at the Contractor's risk.

B. The Engineer will be responsible for the approval or rejection of the suitability of all materials.

C. Submit the name of each material supplier and specific type and source of each material. Any change in source throughout the job requires approval of the Owner or Engineer.

D. For use of fabrics or geogrids, submit manufacturer's literature for approval by the Engineer.

1.6 COORDINATION

A. Prior to start of earthwork the Contractor shall arrange an on-site meeting with the Engineer, the independent testing firm, and the Geotechnical Consultant for the purpose of establishing the Contractor's schedule of operations and scheduling observation and testing procedures and requirements.

B. As construction proceeds, the Contractor shall be responsible for notifying the Engineer prior to the start of earthwork operations requiring observation and/or testing.

1.7 SUBSURFACE SOIL DATA

(NOT PART OF CONTRACT DOCUMENTS)

PART 2 - PRODUCTS

2.1 MATERIALS

A. Subgrade is the material in excavation (cuts) and fills located below: subbase, base course layer for slabs, sidewalks, pavement, and other improvements.

B. Common Fill/Ordinary Borrow shall be friable soil containing no stone greater than two-thirds (2/3) the loose lift thickness with a maximum stone size of twelve (12) inches in diameter. The material shall be essentially free of trash, ice snow, tree stumps, roots, and organic materials. The soil shall contain no more than 15 percent passing the #200 sieve.

C. Gravel shall consist of inert material that is hard, durable stone and coarse sand, free from loam, clay, surface coatings and deleterious materials, and shall conform to the following gradation:

Sieve (ASTM D422)	Percent Passing
*	100
1/2-inch	50-85
No. 4	40-75
No. 10	30-60
No. 40	10-35
No. 100	5-20
No. 200	2-10

*Four inches (4") where placed as base below slab and pavement; One and one half inches (1 ½") where placed as pipe bedding and backfill up to 24 inches above pipe; and elsewhere two thirds (2/3) the loose lift thickness.

D. Sand shall consist of clean, inert, hard, durable grains of quartz or other hard, durable rock, free from loam or clay, surface coatings and deleterious materials.

The allowable amount of material passing a No. 200 sieve as determined by AASHTO-T11 or ASTM D: 422 shall not exceed 10 percent by weight. The maximum particle size shall be 1/4-inch (i.e., 100 percent passing the No. 4 sieve).

In addition to the above criteria when sand is used for bedding concrete pavers and for utility bedding it shall conform to the following gradation.

Sieve (ASTM D422)	Percent Passing by Weight
No. 4	100
No. 8	80 – 95
No. 16	55 – 85
No. 50	0 – 35
No. 200	0 – 5

E. On Site Disposal System Leaching Area, Sand Fill Material

(NOT USED)

F. Crushed Stone shall be composed of durable crushed rock consisting of angular fragments, free from a detrimental quantity of thin, flat, elongated pieces or shall be durable crushed gravel stone obtained by artificial crushing of gravel boulders or fieldstone.

The crushed stone shall be free from clay, loam or deleterious material.

Crushed Stone shall conform to the following gradations:

	Percent Passing By Weight	
Sieve Size	1/2-Inch Stone	3/4-Inch Stone
1 inch	---	100
3/4 inch	---	90-100
5/8 inch	100	---
1/2 inch	85-100	10-50
3/8 inch	15-45	0-20
No. 4	---	0-5
No. 8	0-5	---

	Percent Passing By Weight	
Sieve Size	1-1/2-Inch Stone	2-Inch Stone
2 inch	100	90-100
1-1/2 inch	95-100	---
1-1/4 inch	---	25-50
1 inch	35-70	---
3/4 inch	0-25	0-15
1/2 inch	---	---

G. Dense-graded Crushed Stone for subbase and base
Dense-graded Crushed Stone shall conform to the following gradation:

	Percent Passing By Weight
Sieve Size	2-Inch Stone
2 inch	100
1-1/2 inch	70-100
3/4 inch	50-85
No. 4	30-55
No. 50	8-24
No. 200	3-10

H. Washed 2-Inch Crushed Stone for Stormwater Recharge

(NOT USED)

I. Double-Washed Crushed Stone for Wastewater Soil Absorption Systems

(NOT USED)

J. Structural Fill shall be free from ice and snow, roots, sod, rubbish and other deleterious or organic matter. Structural fill shall conform to the following gradation requirements:

Sieve Size	Percent Passing By Weight
*	100
No. 4	30-95
No. 40	10-70
No. 200	0-15

* Two thirds (2/3) of the loose lift thickness.

K. Blast Rock Fill

(NOT USED)

L. Choke Stone

(NOT USED)

M. Stone Fill shall be hard, durable, clean, washed rock with a minimum diameter of 1-1/2 inches and a maximum diameter of 3 inches with void ratio of 30 to 40 percent.

N. Revetment shall consist of slope protection of the required type at the location shown on the plans, and in conference with the lines and grades shown on the plans.

1. Riprap. This work shall consist of a protective covering of angular shaped stones laid on slopes in front of structures, wingwalls, piers and elsewhere as required, to insure protection of structures and embankments.

   Riprap shall be sound, durable rock, which is angular in shape. Rounded stones, boulders, sandstone or similar soft stone or relatively thin slabs will not be acceptable. Each stone shall weigh not less than 50 pounds and at least 75% of the volume shall consist of stones weighing not less than 500 pounds each. The remainder of the stones shall be so graded that when placed with the larger stones the entire mass will be compact.

2. Stone for Pipe Ends. Stone for pipe ends and energy dissipaters shall be sound, durable rock, which is angular in shape. Rounded stones, boulders, sandstone or similar stone or relatively thin slabs will not be acceptable. Each stone shall weigh not less than 50 pounds nor be less than 0.8 feet in diameter if circular shape or less than 1.4 ft. long and 0.5 ft. wide and 0.5 ft. in height if angular shape. Each larger stone shall weigh not more than 150 pounds nor be less than 1.3 feet in diameter if circular shape or less than 2.0 ft. long and 0.8 ft. wide and 0.8 ft. in height if angular shape and at least 50 percent of the stone volume shall consist of stones weighing not less than 75 pounds nor be less than 1.0 feet in diameter if circular shape or less than 1.6 ft. long and 0.6 ft. wide and 0.6 ft. height if angular shape. The remainder of the stones shall be so graded that when placed with the larger stones the entire mass will be compact. The median diameter or angular shape stone size shall be graded so 50 percent of the stones are larger than the d50 size and 50 percent smaller, and the largest stone is 1-1/2 times the d50.

3. Slope Paving. Slope paving shall consist of angular shaped stones, having a reasonable flat face, carefully placed on slopes to insure the slope is protected.

Stone for slope paving shall be sound, angular in shape and free from structural defects. Each stone shall have one reasonably flat face and a thickness perpendicular to the face of not less than 6 inches, which shall be the least dimension of the stone.

Approximately 60 percent of the stones shall vary from 2 to 3 cubic feet each in volume and the remainder of the stones shall each be from 1 to 2 cubic feet in volume.

4. Channel Paving and Grouted Channel Paving. Channel Paving, of the type specified, shall be placed as protective covering along the slopes around culvert inlets or outlets, around foundations, structure and dikes.

   Stones for Channel Paving and Grouted Channel Paving shall be sound, approved quality angular blocks, as nearly rectangular or cubical as practicable. Rounded stones or relatively thin slabs will not be acceptable. At least 75 percent of the volume shall consist of stones weighing at least 200 pounds each. The remainder of the stones shall be so graded that when placed with the larger stones a compact mass will result.

5. Filter Layer. The Filter Layer of stone shall be used under Riprap, Stone for Pipe Ends, Slope Paving, and Channel Paving (grouted or non-grouted). The Filter Layer shall be minimum of 6-inches in thickness.

6. Filter fabric used with riprap, stone for pipe ends, slope paving, or channel paving (grouted or ungrouted) shall be as TenCate Mirafi® 600X or equivalent.

O. Filter Fabric/Geotextiles

1. Geotextile Fabric shall be used to prevent soil intrusion into drains and/or assist in stabilizing soil subgrades to be laid on approved soil subgrades prior to placement of fill materials.

   a) Contractor shall use TenCate Mirafi® 140N or equivalent filter fabric in drainage recharge systems, underdrain systems between crushed stone and granular soils, leaching areas or where indicated on the plans.

P. Earthen Berm: In addition to the placement and compaction, requirements for the embankment fills, the following shall apply. The fill designated for the core of earthen berm embankment shall be low permeability fill. The Core Fill shall be placed and compacted in a manner to provide an in-situ permeability rate of not more than 1.0×10^{-5} cm/sec

Q. Controlled Low Strength Material or Controlled Density Fill: Controlled low strength material or controlled density fill shall be a cement concrete backfill material that flows like a liquid, supports like a solid when cured, and levels without tamping or vibrating to reach 100 percent compaction. The material shall be used primarily as a backfill in lieu of compacted fill. The material shall be proportioned to yield a 28—day minimum compressive strength of 200 pounds per square inch. The material shall be produced and installed in accordance with ACI 229R, and ACI 116R, with a mix formulation to be approved prior to placement of the material in the project.

R. Topsoil/Loam

1. Topsoil (stripped from site) or Loam (supplied from off-site) shall be a sandy loam or loam soil classification as defined by the USDA Soil Conservation Service, Soil Classification System consisting of a fertile, friable, natural topsoil/loam typical of locality, without admixture of subsoil, refuse or other foreign materials, shall be

obtained from a well-drained arable site, and shall meet ASTM D5268. It shall be such a mixture of sand, silt and clay particles as to exhibit sandy and clayey properties in about equal proportions. It shall be free of stumps, roots, heavy or stiff clay, stones larger than 3/4-inch in diameter, lumps, coarse sand, noxious weeds, sticks, brush or other litter, and shall have the following mechanical analysis:

Textural Class	% of Total Weight	Average %
Sand 0.05 - 2.0mm dia. Range	45 to 75	60
Silt 0.002 - 0.05mm dia. Range	15 to 35	25
Clay less than 0.002mm dia. Range	5 to 25	15

a) 95 percent of Topsoil shall pass a 2.0mm sieve.

b) Topsoil/Loam shall have a pH value range of 6.0 to 7.0. If Topsoil/Loam material does not fall within the required pH range, limestone or aluminum sulfate shall be added to bring the pH within the specified limit.

2. Prior to stripping, the topsoil shall demonstrate, by the occurrence upon it of healthy crops, grass or other vegetative growth, that it is reasonably well drained and that it does not contain toxic amounts of either acid or alkaline elements.

3. Loam and topsoil shall contain not less than 4 percent nor more than 20 percent organic matter as determined by the loss on ignition of oven-dried samples. Test sample shall be oven-dried to a constant weight at a temperature of 230°F ±9°.

4. In other portions of these specifications, the words "loam" and "topsoil" are used interchangeably.

S. Wetland Soils/Organic Materials

1. Natural Wetland Soils - Wetland soils shall be obtained from nearby wetland impact areas. Only soils from the top 18-inches within designated wetland areas may be used as wetland soils in the wetland replication areas. Wetland soils may be highly organic in nature, such as a peat soil, or contain a high mineral content. Therefore, there is no specific standard for the composition of wetland soils. Wetland soils stripped from the wetland impact areas for use in the wetland replication areas shall be free of large stones, stumps, large sticks, shrubs or other litter.

2. Man-made Wetland Soils - Man-made wetland soils may be prepared by amending natural topsoil with peat moss or leaf mold, at a ratio of 75 percent soil to 25 percent organic material by volume. The resulting soil mix shall be free of large stones, stumps, large sticks, shrubs or other litter.

3. Peat Moss - Peat Moss shall be composed of the partly decomposed stems and leaves of any or several species of sphagnum moss. It shall be free from wood, decomposed colloidal residue and other foreign matter. It shall have an acidity range of 3.5 pH to 5.5 pH as determined in accordance with the methods of testing of A.O.A.C., latest edition. Its water absorbing ability shall be a minimum of 100 percent by weight on an oven-dry basis.

4. Leaf mold - Leaf mold shall be a highly organic dark brown to black spongy residue resulting from the well aerated composting of deciduous tree parts, free of plants and their roots, debris and other extraneous matter and shall be uncontaminated by foreign matter and substances harmful to plant growth. The organic matter shall not

be less than 85 percent by weight as determined by the loss on ignition of oven-dried samples. Test samples shall be oven-dried to a constant weight at a temperature of 16 degrees C. The inorganic residue after ignition shall not be finer textured than 4% by weight passing the number 200 sieve with washing.

2.2 USE OF MATERIALS

Use of materials shall be as described below and as shown on the plans. Further details can be found in the project plans. Combinations or layering of materials may be necessary in certain instances such as for detention embankments, subsurface disposal areas, and riprap walls as examples.

A. Common/Ordinary Fill: Use common/ordinary fill for general grading, as backfill, embankment fill in areas outside the building and pavement limits. Stones larger than twelve inches (12") shall be removed prior to compaction.

B. Gravel: Use for pipe bedding backfill and backfill below pavement and slab as base course layer. Use for material placed "in the wet". Use for backfill behind retaining walls and retaining structures. Use for pipe and utility bedding.

C. Sand: Use for conduit bedding and initial backfill, and gas line bedding and backfill. Use for bedding and backfill of direct burial cables and/or flexible piping. Use for bedding and filling joints for concrete unit pavers.

D. On-Site Disposal System Leaching Area Sand Fill Material: (NOT USED)

E. Crushed Stone: Use crushed stone as a filter material around perforated pipe, as bedding for piping under wet subgrade conditions.

F. Dense-Graded Crushed Stone: Use dense-graded crushed stone for sub-base and base material.

G. Washed Crushed Stone: Use washed crushed stone in stormwater recharge system as the material around perforated pipe

H. Double Washed 1-1/2 Inch Crushed Stone: Use double washed 1-1/2 inch crushed stone in soil absorption facilities for wastewater disposal systems, recharge filters and as a filter material around perforated pipe.

I. Structural Fill: Use structural fill below subgrade elevation in building areas such as beneath floor slabs, foundations, and in other soil bearing situations. Structural fill shall also be used for backfill against building foundations and frost walls. Use structural fills below pavement gravel base course.

J. Blast Rock Fill and Choke Stone: (NOT USED)

K. Stone Fill: Use stone fill as additional storage medium for underground stormwater exfiltration trenches or pits.

L. Filter Fabric/Geotextiles: To be used as filter barriers between drainage recharge systems, underdrain systems, wastewater absorption systems, and between natural earth material and backfill or other materials to assist in stabilizing soil subgrades.

M. Earthen Berm: Use a low permeability fill material in the core of earthen berms.

N. Riprap: Use riprap for slope stabilization and for erosion control in channel bottoms, overflow areas, level spreaders and where indicated.

O. Stone for Pipe Ends: Use stone for erosion prevention at pipe ends of drainage pipes, energy dissipaters, stilling Basins and at inlets to drainage structures.

P. Slope Paving: Use stone for slope paving to prevent slope de-stabilization, erosion and to protect slope faces where indicated on the Drawings or where slopes of steeper than 2:1 are created due to site work.

Q. Channel Paving and Grouted Channel Paving: Use stone for Channel Paving and Grouted Channel Paving in and around water courses to prevent erosion, scour and instability of the channel bottom and side slopes.

R. Filter Layer: Use filter stone layer under riprap, stone for pipe ends, slope paving, channel paving and grouted channel paving or where indicated.

S. Controlled Low Strength Material or Controlled Density Fill: (NOT USED)

T. Topsoil/Loam: Use as fill in designated landscape and lawn areas, if off-site material is required Loam shall be furnished and installed. Topsoil maybe used as fill in landscape and lawn areas, if an excess of topsoil exists on-site.

U. Wetland Soil/Organic Materials: Use a wetland soils in wetland replication areas.

PART 3 EXECUTION

3.1 DEWATERING

A. Provide, operate and maintain site and subsurface drainage and dewatering in an acceptable manner as required to complete the work throughout the course of the project.

B. Remove, by pumping or other means, water accumulated in excavations and within two (2) feet below subgrade until earthwork, utilities, concrete, and other work operations are complete. Dewatering shall be considered incidental to the defined work items and costs for performing same shall be included in the bid price(s) and no separate payment shall be made to the Contractor for dewatering operations.

C. Provide, maintain, and operate wells, pumps and related equipment, including stand-by equipment, of sufficient capacity to maintain excavations and trenches free of water 24 hours per day to enable all work to be conducted in-the-dry and to protect bearing surfaces from disturbance.

D. Water from excavations shall be disposed of in such manner as will not cause injury to public health, public and private property, existing work, work to be completed or in progress, roads, walks, and streets, or cause any interference with use of same by public. Concrete or fill shall not be placed in excavations containing free water.

E. Construction may require excavation below water level in soil. The Contractor shall complete this work in-the-dry to maintain the undisturbed condition of the bearing soil.

F. Maintain groundwater at least 12 inches below lowest exposed subgrade level. If the dewatering methods have not been adequate and the bearing soils are disturbed, remove disturbed soil and replace with compacted Structural Fill or lean concrete at no additional cost to the Owner.

G. Sumps shall be surrounded by suitable filter media to minimize the fines removed during pumping.

H. Pumped groundwater and surface water runoff shall be initially pumped to a settling basin to remove suspended solids prior to discharge. The Contractor shall furnish all treatment systems that are necessary for pretreatment of groundwater prior to discharge in accordance with all applicable permits and regulations.

I. Discharge of pumped water, either surface water runoff or groundwater, shall be in compliance with discharge criteria contained in permits issued by governing agencies, and all legal requirements and regulations. All permits shall be obtained by the Contractor.

3.2 EXCAVATIONS

A. General Definitions

1. Unclassified Materials – Unclassified excavation includes the satisfactory removal and disposal of all materials (except contaminated materials defined below) encountered regardless of the nature of the materials and shall be understood to include, but not be limited to, blastrock, bedrock, earth, hardpan, fill, foundations, pavements, curbs, piping, railroad track and ties, cobblestones, footings, bricks, concrete, abandoned drainage and utility structures, and debris. Drilling, blasting, excavation and disposal of rock shall be considered unclassified excavation and shall be included as a part of the contract price, with no separate payment items for its excavation and handling.

2. Contaminated Materials

a) The Contractor shall be familiar with the Massachusetts Department of Environmental Protection (DEP) Hazardous Waste Regulations 310 CMR 30.00 and the Massachusetts Contingency Plan (MCP) 310 CMP 40.00 when conducting earthwork operations.

b) In general, a hazardous waste (contaminated with oil or hazardous materials) is a waste or combination of wastes which, because of its quantity, concentration, physical, chemical or infectious characteristics, may cause, or significantly contribute to, an increase in mortality or an increase in serious irreversible or incapacitating reversible illness or pose a substantial present or potential hazard to human health, safety, or welfare, or to the environment when improperly stored, treated, transported, or disposed of, or otherwise managed. (Additional criteria and characteristics to determine if a waste is hazardous are contained in 310 CMR 30.111, 30.112 and 30.120 through 30.125).

c) The Contractor shall immediately halt soil movement activities and notify the Owner if visual, olfactory or other evidence suggests that soils may be contaminated with oil or hazardous materials. Contractor shall provide reasonable assistance to Owner and to Owner's representative for access to potential contamination areas for proper assessment of hazardous conditions.

d) The Owner shall contact an environmental professional (such as a Licensed Site Professional) to test any earth materials suspected of containing hazardous waste. The results shall be evaluated by the environmental professional and compared with reporting thresholds found in the Massachusetts Contingency Plan (MCP) 310 CMR 40.0000. The Owner shall inform the Contractor of the laboratory test results as soon as possible and discuss the possible soil management, disposal, recycling options available. Contaminated soils shall be managed and handled in compliance with the referenced state/federal regulations, guidelines and policies. Time and expenses associated with contaminated soils shall be negotiated between the Contractor and the Owner prior to the start of the soil management, disposal, recycling work. Owner reserves the right to negotiate and contract with other entities for remedial and, in that event, this Contractor shall make reasonable accommodations for other entities to perform this work.

e) Although there is no evidence of oil or hazardous material, there is a possibility of the presence of such wastes on this site. Appropriate testing, as recommended by an environmental professional, shall be accomplished to assess the potential presence of oil or hazardous material. Earth material shall not be removed from the site unless on-site reuse is not possible.

f) Proper documentation of legal disposal of hazardous materials handled by this Contractor shall be provided by the Contractor to the Owner, Engineer, and review authorities. Additional guidance for possible disposal activities can be found in the Department of Environmental Protection's Policy #COMM-97-001, Reuse and Disposal of Contaminated Soil at Massachusetts Landfills.

g) Unless specifically identified as contaminated material under referenced statues and as defined above, as judged by the engineer, excavated materials shall be considered unclassified as defined in item 1. above.

B. <u>Site General Requirements</u>

1. Control the grading so that ground is pitched to prevent water from running to excavated areas, damaging other structures, or adjacent properties.

2. Where soil has been softened or eroded by flooding, equipment, traffic, or placement during unfavorable weather, or such other conditions, it shall be removed and replaced by the Contractor with suitable material, and at no cost to the Owner.

3. Exercise care to preserve the material below and beyond the lines of excavation. Where excavation is carried out below indicated grade or beyond the lines of excavation, Contractor shall backfill and compact the over excavation with structural fill to the indicated grade, at no additional cost to the Owner and at the direction of the Engineer.

4. Provide sheeting, shoring and bracing to complete and protect all excavated areas, as required for safety and compliance with OSHA. Costs for sheeting, shoring, and bracing shall be included as a part of the contract price for completing the work and Owner shall make no separate payment for this work.

5. Excavated materials unsuitable for reuse, surplus excavated rock and surplus excavated soil not used to fulfill requirements of the Contract, shall become the property of the Contractor and shall be removed from the site in accordance with

the regulations and requirements of all municipalities or agencies having jurisdiction over the disposal sites and the route between the project and the disposal sites.

6. Limits of excavation are such that all unsuitable material will be removed to firm natural ground in the manner specified below. In building areas, unsuitable materials shall be removed to a distance of five feet (5') beyond the building lines or within the area defined by a one horizontal to one vertical (1h:1v) line sloping down from outside bottom edge of exterior footings to firm natural ground, whichever is greater. Limits of unsuitable material excavation also apply to areas below exterior column footings. All abandoned pipes within building areas are to be removed and the excavations are to be properly backfilled.

7. Unsuitable materials are classified as organics such as peat, trash, fill, stumps, debris, material determined to be hazardous, and topsoil and subsoil when determined by Engineer to be unacceptable for incorporation into the work.

8. Under pavement areas, existing fill will be densified in place and will not be excavated. Topsoil need not be excavated from pavement areas if located more than three feet (3') below finish pavement grades. Trees are to be cut flush with ground and stumps shall be left in place if the existing ground surface is located more than six feet (6') below finish grades. Abandoned pipes, that are buried more than four feet (4') from finish grade to the top of the pipe and that due not interfere with utilities to remain or to be installed, shall be capped and/or grouted at both ends and left in place. Abandoned pipes less than four feet from finish grade shall be removed and the trench appropriately backfilled with structural fill.

9. All suitable material, as determined by the Engineer, may be reused on the site, provided it meets the gradation requirements for the given materials in the information of fill sections, embankments, subgrades, backfills, etc.

10. Do not over excavate below proposed design grades for the purpose of obtaining borrow for use off-site.

C. <u>Proof-rolling</u>

1. Prior to placing compacted fills, the Contractor shall proof roll the natural grades to remain. Where materials of low density are indicated by rutting or weaving under the compactor, the Contractor may be required to make up to three (3) additional complete coverages of the area with the compactor as determined by the Engineer. The cost of all proof rolling shall be included in the Contract Sum. If materials of low density are encountered that cannot be compacted to the extent necessary to support the proposed embankment fills as determined by the Engineer, the Contractor shall remove those materials and replace them with compacted fill.

2. Alternately, an initial layer of fill may be allowed to form a working platform. The need, manner of construction, and thickness of such a layer shall be subject to approval of the Engineer and the layer will be permitted only where the lack of support is, as determined by the Engineer, not due to deficient ditching, grading or drainage practices, or where the embankment could be constructed in the approved manner by the use of different equipment or procedures. Thickness of up to eighteen (18) inches may be permitted for such a layer.

3.3 TRENCH EXCAVATION

A. Excavate as necessary for all drainage pipes, utilities and related structures and appurtenances, and for any other trenching necessary to complete the work.

B. Definitions:

1. Trench shall be defined as an excavation of any length where the width is less than twice the depth and where the shortest distance between payment lines does not exceed ten (10') feet. All other excavations shall be defined as open excavations.

2. The words "invert" or "invert elevation" as used herein shall be defined as the elevation at the inside bottom surface of the pipe or channel.

3. The words "bottom of the pipe" as used herein shall be defined as the base of the pipe at its outer surface.

C. In general, machine excavation of trenches will be permitted with the exception of preparation of pipe beds which will be hand work. Excavate by hand or machine methods to at least six (6") inches below the bottom of pipe or as shown on the Drawings. Excavation to final grade shall be made in such a manner as to maintain the undisturbed bearing character of the soils exposed at the excavation level.

D. Utilities or piping shall not be laid directly on boulders, cobbles or other hard material. This material shall be removed to a minimum of six inches below the bottom of pipe at all points and backfilled or compacted as specified.

E. Remove unsuitable material encountered at subgrade elevations, backfill with material specified herein and as otherwise indicated on the Drawings, specified or directed. Compact as specified with approved compactors.

F. In general, the width of trenches shall be kept to a minimum and in the case of piping shall not exceed the sum of the pipe's outside diameter plus 2'0" to at least twelve (12") inches above the pipe.

3.4 ROCK EXCAVATIONS

(NOT USED)

3.5 PREPARATION OF EXCAVATION BOTTOMS

A. General Rock Subgrade Areas

1. Rock surfaces to receive backfill shall have a maximum slope of four (4) horizontal to one (1) vertical.

2. Rock excavations carried below design grade and clearances shall be backfilled with lean concrete with a minimum compressive strength of 1500 psi.

B. Building and Pavement Areas

1. Loose rock is covered with 6 inches of crushed stone or choke stone; and

2. Prior to placing crushed or choked stone, the area is rolled with at least four passes of a heavy vibratory roller, RayGo 600 or equal.

3. Proofroll subgrade with a vibratory roller or by minimum of two passes of a fully loaded ten-wheeled dump truck. Soft or hard areas and other objectionable material (stumps, wood, organics) shall be excavated and backfilled with compacted structural fill.

4. Prior to the placement of blast rock fill over a bedrock subgrade, voids in the rock surface shall be choked off with appropriately graded crushed stone or Compacted Structural Fill placed on filter fabric to prevent migration of fines into fractures, as directed by the Owner's Representative.

C. Subgrades under proposed landscape areas.

1. Depth to rock under planting areas shall be a minimum of 48 inches below subgrade elevations. Backfill to subgrade shall be with topsoil/loam materials.

2. In lawn areas, scarify subsoil a minimum depth of six inches. Subsoil shall also be cleared of debris and stones larger than four inches prior to topsoil spreading.

3. In planting areas, scarify subsoil a minimum depth of six inches below the required root ball excavation prior to placement of plant backfill mixture.

D. Trenches

1. Compaction equipment used in open areas where space permits shall consist of vibratory rollers weighing at least 15,000 pounds, fully loaded ten-wheel dump trucks, pneumatic compactors or other similar equipment.

2. Compaction equipment for fill against foundation walls and in other confined areas shall be accomplished by means of drum-type, power-driven, hand-guided vibratory compactors operating at 2,000 cycles per minute, or by hand-guided vibratory plate tampers.

3.6 BACKFILLING AND PLACEMENT OF FILL MATERIALS

A. Site

1. Dewater subgrade areas prior to filling.

2. Compaction by puddling or jetting is prohibited.

3. Control groundwater and surface runoff to minimize disturbance of exposed natural ground surface, previously placed and compacted fill and material being placed.

4. Soil fill moisture shall be maintained at an acceptable working range to allow for proper compaction.

5. Do not place fill on frozen ground.

6. Do not place frozen fill.

7. Place fill in uniform horizontal layers and compact immediately after placement. Where the horizontal layer meets a rising slope, the layer shall be keyed into the slope by cutting a bench during spreading of preceding lift.

8. To the extent that is practical, each layer of fill shall be compacted to the specific density the same day it is placed.

9. Slope fill surfaces at the end of each day to provide for free surface drainage.

10. Protect structures and pipes from damage during backfilling operations. Repair damage at no cost to owner.

11. Placement of fill shall not begin prior to observation and approval of subgrade conditions by Engineer.

12. Protect foundations, footings, and waterproofing during backfilling. Repair damage at no cost to Owner.

13. Prior to backfilling between foundation wall and sheeting, remove unsuitable material, including rubbish, organic materials or other debris. Do not commence filling operations until conditions have been observed by Engineer.

14. Backfill shall not be placed against walls until they are braced or have cured sufficiently to develop strength necessary to withstand, without damage, pressure from backfilling and compacting operations.

15. Provide shoring, sheeting, and bracing of excavations as required to assure complete safety against collapse of the earth at the site of excavations. Alternatively, lay back excavations to suitable slope.

16. Upon completion of the work, the final ground surface shall be left in a firm, unyielding, true, uniform condition free from ruts. Repair disturbed areas caused equipment traffic at no cost to Owners.

B. Equipment

1. Compaction equipment used in open areas where space permits shall consist of vibratory rollers weighting at least 15,000 pounds, fully loaded ten-wheel dump trucks, pneumatic compactors of other similar equipment.

2. Compaction equipment for fill against foundation walls and in other confined areas shall be accomplished by means of drum-type, power-driven, hand-guided vibratory compactors operating at 2,000 cycles per minute, or by hand-guided vibratory plate tampers.

C. Blast Rock Backfill – Structure and Foundation Backfilling and Compacting

(NOT USED)

D. Placing Fill

1. Fill sections and embankments shall be constructed of earth, rock or a mixture of earth and rock deposited in successive lifts. Except as hereinafter permitted, the loose thickness of each lift shall not be more than twelve (12) inches before compaction.

2. Rock fill may be used in deep fill areas, placed to the levels and under the conditions described in Section 2.01 K.

3. No rock in excess of six (6) inches in its largest dimension shall be incorporated in the top two (2) foot layer of embankment immediately below the subgrade.

4. During fill and embankment construction operations, earth moving equipment shall be routed as evenly as possible over the entire width of the work.

5. At the close of each day's work the working surface shall be crowned, shaped, and rolled with smooth steel or pneumatic tired rollers to ensure proper drainage.

6. Prior to placing compacted Structural Fill below the slab, the surface of natural ground, shall be proof-rolled with at least four passes of a heavy vibratory drum roller, such as a RayGo 600 or equal. Hard and soft spots shall be excavated and replaced with Structural Fill or other material acceptable to the Owner's Representative.

7. Where excavations for slab-on-grade extend to weathered fractured, or blasted bedrock, the Owner's Representative shall assess the rock surface for the presence of voids and may require placement of a 2 to 18 inch layer of choke stone or crushed stone prior to placement of structural fill.

E. Fills under Parking Areas

1. Paved area subgrades shall be excavated to a minimum of 12 inches beneath required subgrade elevation or existing grade, whichever is lower.

2. Proofroll subgrade with a vibratory roller or by minimum of two passes of a fully loaded ten-wheeled dump truck. Soft or hard areas and other objectionable material (stumps, wood, organics) shall be excavated and backfilled with compacted common fill.

3. Where excavations for pavements extend to weathered, fractured, or blasted bedrock, prepare surface as indicated in Section 3.05 B for building and pavement areas.

4. A minimum of 12 inches of gravel base course shall be provided between subgrade and the bottom of the bituminous surface.

F. Subgrades Under Proposed Landscape Areas

1. Fills under tree and shrub planting areas shall be back filled with topsoil/loam materials.

G. Buildings

(NOT USED)

H. Revetments

1. General

a) Areas to be protected by revetment shall be free of brush, trees, stumps and other organic material and be dressed to a smooth surface. All soft or spongy

material shall be removed to the depth shown on the plans or as directed by the Engineer and replaced with approved materials.

b) A toe trench shall be dug and maintained until the revetment is placed.

c) Protection for structure foundations shall be provided as early as the foundation construction permits.

d) The area to be protected shall be cleaned of waste materials and the surface to be protected prepared as shown on the plans.

e) Where shown on the plans, a foundation filter bed shall be placed on the area before the stone is placed. The foundation filter bed will be six inches of dense graded crushed stone and six inches of one half inch crushed stone and at least 12 inches in total thickness.

2. Riprap

a) The stones shall be placed upon an approved filter bed to the lines and grades shown on the plans and as directed.

b) Each stone shall be carefully placed, by hand or machine as required, on a prepared bed, normal to the slope and firmly bedded thereon.

c) The larger stone shall be placed closely together and the intervening spaces filled with smaller stones in such a manner that the entire surface will form a compact mass.

3. Stone for Pipe Ends

a) Stone for pipe ends shall consist of a protective covering of angular shaped stones laid on slopes in front of and around drainage line ends or structures to insure protection of the pipe ends and the embankment and shall conform to the requirements for “Stone for Pipe Ends".

b) The stone shall be placed to line and grade as shown on the plans or as directed on a prepared bed of embankment material or existing materials. Each stone shall be carefully placed by hand, normal to the slope and firmly bedded thereon. The larger stones shall be placed directly at the drainage end to prevent erosion and displacement. Each stone shall weigh not less than the minimum specified nor more than the maximum specified and at least 75 percent of the volume shall consist of stones weighing not less than the d_{50} Median. The remainder of the stones shall be so graded that when placed with the larger stones, the entire mass will be compact with a minimum amount of voids and a minimum thickness of 9 inches.

4. Slope Paving

a) The stones shall be placed upon an approved filter bed to the lines and grades shown on the plans and as directed. The larger stones shall be placed closely together throughout the surface and the interstices carefully chinked with smaller stones. All stones shall be securely bedded, with the exposed surfaces approximately parallel to and within 6 inches of the slope shown on the plans.

When the paving cannot be laid to the required line and grade below water, a suitable foundation of dumped riprap shall be constructed.

5. Channel Paving and Grouted Channel Paving

a) All stones shall be placed upon an approved bed to the lines and grades shown on the plans and as directed. The larger stones shall be placed as closely together as possible throughout the surface. All stones shall be securely bedded and laid so that the exposed surfaces will be approximately parallel to and within 3 inches tolerance of the grade shown on the plans. The finished paving shall present a continuous uniform surface of stonework.

b) Grouting, when required, shall be done after the paving is completely in place. The paving stones shall be sprinkled with water immediately before placing the grout.

3.7 TRENCH BACKFILLING

A. General

1. Trenches shall be backfilled as soon as practicable with suitable approved materials. All trench backfilling shall be done with special care, in the following manner and as the Engineer may direct from time to time.

2. Backfill material for pipe bedding shall be deposited in the trench, uniformly on both sides of the pipe, for the entire width of the trench to the springline of the pipe. The backfill material shall be placed by hand shovels, in layers not more than 6 inches thick in loose depth, and each layer shall be thoroughly and evenly compacted by tamping on each side of the pipe to provide uniform support around the pipe.

3. Trench backfilling shall be placed so as not to disturb the previously installed pipes, utilities, concrete, and other work within and near the trench. The moisture content of the backfill material shall be such that proper compaction will be obtained. Backfill of trenches within areas of pavement construction shall be made in controlled compacted lifts extending to grades required to establish the proper pavement base courses.

4. In backfilling trenches, each layer of backfill material shall be adequately compacted in such a manner as to provide the required bearing value, so that paving can proceed immediately after backfilling is completed.

5. Any trenches or excavations improperly backfilled, or where settlement occurs, shall be reopened to the depth required for proper compaction, then refilled and compacted with the surface restored to the required grade and condition, at no additional expense to the Owner.

6. During filling and backfilling operations, pipelines will be checked to determine whether any displacement of the pipe has occurred. If the inspection of the pipelines shows poor alignment, displacement of pipe, or any other defects, the condition shall be remedied by removal, realignment, and backfill of the pipe, in a manner satisfactory to the Engineer at no additional cost to the Owner.

B. Embedment

The type of materials to be used in bedding and backfilling shall conform to the details shown on the Drawings and the following:

1. Embedment materials are those used for bedding, haunching and initial backfill.Perform in accordance with ASTM D-2321 -. - - The following will describe the soils:

   a) Class I -- Angular crushed stone or rock, dense or open graded with little or no fines (3/4 inch stone size) (to be used in wet conditions or where shown on the Drawings)

   b) Class II - Clean, coarse grained gravel, with a maximum stone size of the 1-1/2 inches

   c) Embedment materials shall be free from lumps of frozen soil or ice when placed. Embedment materials shall be placed and compacted at optimum moisture content.

2. Foundation: A stable utility foundation of Class I or II material must be provided to insure proper line and grade is maintained. Unsuitable foundations such as organics, soft clay, and other soft materials must be removed and the material stabilized. Unsuitable or unstable foundation materials shall be undercut and replaced with a suitable bedding material of Class I or Class II (see 3.08 B5), placed in 6" lifts. The Engineer may approve other methods of stabilization, such as geotextiles.

3. Bedding: Provide a stable and uniform bedding for the pipe and any protruding features of its joints and/or fittings. The bedding for the middle 1/3 of the pipe outside diameter should be loosely placed so that the pipe conforms to the trench. The remainder of the bedding at the base of the trench shall be compacted to a minimum of 95 percent modified proctor density as determined by ASTM Test method D1557. Class I, or II materials are suitable for use as bedding.

4. Haunching: Proper haunching provides a major portion of the pipe's strength and stability. Care must be exercised to insure placement and compaction of the embedment material in the haunches. For larger diameter pipes (> 30"), embedment materials should be worked under the haunches by hand. Haunching materials may be Class I, or II and must be placed and compacted in 6-inch maximum lifts, compacted to 95 percent modified proctor density.

5. Initial Backfill: Initial backfill materials are required for a minimum of 3/4 of the pipe diameter. The initial backfill shall be from the springline to 24 inches above the pipe to provide protection for the pipe from construction operations during placement of the final backfill and protect the pipe from stones or cobbles in the final backfill.

   a) Class I materials must be used in wet trenches and Class I bedding and haunching materials shall be used.

   b) Class II materials shall be used unless noted otherwise or wet conditions are encountered. The material shall be compacted in 6 inch lifts to 95 percent modified proctor density (ASTM D1557).

   c) Flooding or jetting as a procedure for compaction are not allowed.

6. Controlled Low Strength Materials (CLSM) or Controlled Density Fill

   (NOT USED) (flowable fills) are acceptable backfill materials. Several considerations should be accounted for when using CLSM/CDF backfill. Provisions to prevent floatation of the pipe during placement of the CLSM/CDF must be used. This can include anchoring the pipe by placing flowable fill at the each joint and allowing the fill to partially cure prior to placing the flowable fill along the entire length of the pipe. Also, mechanical anchors such as bent rebar driven into competent soil or precast weights, may be used at each joint to prevent floatation. When using CLSM/CDF, the fill should always be placed to completely encase the pipe.

7. Backfill. Backfill from one foot (two feet for HDPE pipe) above the top of the pipe to subgrade elevations shall be structural fill material. Generally, the excavated trench material may be used as this backfill. This backfill shall be placed in 12-inch maximum lifts and compacted to a minimum of 92 percent modified proctor density to prevent excessive settlement at the surface.

8. Vehicular and Construction Loads: Pipe installation shall be suitable to carry H-25 live loads (40,000 lbs. Axle - legal load) with 24 inches of cover.

3.8 BACKFILLING AGAINST STRUCTURES

A. Backfilling against masonry or concrete shall only be done when approved. The Contractor shall not place backfill against or on structures until they have attained sufficient strength to support the loads (including construction loads) to which they will be subjected, without distortion, cracking or other damage. As soon as practicable after the structures are structurally adequate and other necessary work has been satisfactorily completed, any leakage tests or other testing of the structures shall be made by the Contractor, as required by the Engineer, at the Contractor's expense.

   After the satisfactory completion of leakage tests and the satisfactory completion of any other required work in connection with the structures, the backfilling around the structures shall proceed using suitable and approved excavation material. The best of the backfill material shall be used for backfilling within 2 feet of the structure. Just prior to placing backfill, the areas shall be cleaned of all excess construction material and debris and the bottom of excavations shall be in a thoroughly compacted condition.

B. Symmetrical backfill loading shall be maintained. Special care shall be taken to prevent any wedging action or eccentric loading upon or against the structures.

   During backfilling operations, care shall be exercised that the equipment used will not overload the structures in passing over and compacting these fills. Except as otherwise specified or directed, backfill shall be placed in layers not more than 12 inches in loose depth and each layer of backfill shall be compacted thoroughly and evenly using approved types of mechanical equipment. Each pass of the equipment shall cover the entire area of each layer of backfill.

C. In compacting and other operations, the Contractor shall conduct his operations in a manner to prevent damage to structures due to passage of heavy equipment over and adjacent to structures. Repair damage made by the Contractor, at no additional expense to the Owner.

D. After backfilling the Contractor shall maintain the surfaces of backfill areas in good condition so as to present a smooth surface at all times level with adjacent surfaces. The Contractor shall repair any subsequent settling over backfilled areas immediately, in a manner satisfactory to the Engineer,

and such maintenance shall be provided by the Contractor for the life of this Contract, at no additional expense to the Owner.

E. The finished subgrade of the filled excavations upon which pavements are to be constructed shall not be disturbed by traffic of other operations and shall be maintained in a satisfactory condition until the finished courses are placed. The storage or stockpiling of materials on finished subgrade will not be permitted.

F. Uniformly smooth grading of all areas to be graded, as indicated including excavated sections and all areas disturbed as a result of the Contractor's operations, shall be accomplished. The finished surfaces shall be reasonably smooth, compacted and free from surface irregularities.

3.9 COMPACTION

A. Compaction Requirements

1. The degree of compaction is expressed as a percentage of the maximum dry density at optimum moisture content as determined by ASTM Test D1557, Method C. The compaction requirements are as follows:

Area	Minimum Degree of Compaction
Below footings	95%
Below slabs	95%
Detention basin berms	95%
Pavement base course	95%
Pavement subbase	95%
General fill below pavement subbase	90%
Trench backfill	92%
Lawn areas	90%

2. Compaction percentages are based on the laboratory derived Maximum Density Values.

B. Moisture Control

1. Fill that is too wet for proper compaction shall be harrowed, or otherwise dried to a proper moisture content to allow compaction to the required density. If fill cannot be dried within 24 hours of placement, it shall be removed and replaced with drier fill.

2. Fill that is too dry for proper compaction shall receive water uniformly applied over the surface of the loose layer. Sufficient water shall be added to allow compaction to the required density.

3. In no case shall fill be placed over material that is frozen. No fill material shall be placed, spread or rolled during unfavorable weather conditions. When work is interrupted by heavy rains, fill operations shall not be resumed until the moisture content and the density of the previously placed fill are as specified.

C. Lift Thickness of Material

1. Structural Fill and Sand Borrow. Place in layers not to exceed 12 inches in thickness when utilizing heavy compaction equipment, and 6 inches when utilizing light hand-operated compaction equipment.

2. Common Fill. Place in layers not to exceed 12 inches in thickness when utilizing heavy compaction equipment, and 8 inches when utilizing light hand-operated compaction equipment.

3. Crushed Stone, Gravel, Dense, Graded Crushed Stone for Subbase. Place in layers not to exceed 9 inches in thickness when utilizing heavy compaction equipment, and 6 inches when utilizing light hand-operated compacted equipment. Compact with a minimum of 4 coverages of acceptable compaction equipment.

D. Placing Fill

1. Fill sections and embankments shall be constructed of earth, rock, or a mixture of earth and rock deposited in successive lifts. Except as hereinafter permitted, the loose thickness of each lift shall not be more than twelve (12) inches before compaction.

2. Rock fill may be used in deep fill areas.

3. No rock in excess of six (6) inches in its largest dimension shall be incorporated in the top two (2) foot layer of embankment immediately below the subgrade.

4. During fill and embankment construction operations, earth moving equipment shall be routed as evenly as possible over the entire width of the work.

5. At the close of each day's work the working surface shall be crowned, shaped, and rolled with smooth steel or pneumatic tired rollers to ensure proper drainage.

E. Protection of Fill

1. Protection of compacted fill shall be the responsibility of the Contractor. Newly graded areas shall be protected from the actions of the elements and traffic. Any settlement or washing that occurs prior to acceptance of the work shall be repaired and grades shall be established to the required elevations and slopes. Damage to any compacted lift (including those lifts previously tested and approved by the Engineer) occurring at any time during the course of construction, which is caused by equipment, moisture entering the embankment, or from any other cause, shall be fully repaired by the Contractor prior to placement of overlying materials, at no additional cost to Owner and to the complete satisfaction of the Engineer.

2. In the event of and prior to the commencement of heavy rains, the Contractor shall suspend fill operations immediately and shall take all necessary steps to keep the site as well drained as possible. Fill operations shall not be resumed until the moisture content of the fill is such as to permit compliance with the Specifications.

3. All corrective work or operations necessary to maintain proper moisture control of the fill material shall be at the expense of the Contractor.

F. Grading Tolerances

1. Grading shall be completed to meet or exceed the following tolerances of uniformity*:

Location	Tolerance
Top of Subgrade Beneath Structures	1/2 inch
Top of Subgrade Beneath Paving	1/2 inch
Top of Subgrade Beneath Landscape Areas	1 inches
Top of Gravel and Gravel Bases	1/4 inch

*Uniformity is defined as no variations in the surface materials, at the grades and slopes indicated on the drawings, that exceed the listed tolerance over a length of ten (10) feet horizontally in any direction.

2. The bottom of earth and rock excavations shall be formed to provide a smooth, uniform slope and grade. The bottom of the excavated grade shall be free of pockets, depressions or ridges that would collect or concentrate water, silts or other such objectionable material prior to the Application of Backfill or other Finish Materials.

G. Finish

Upon completion of the work, ground surface shall be left in a firm, unyielding, true, uniform condition, free of ruts.

3.10 SHEETING AND BRACING

A. General

1. Whenever sheeting and bracing will be required, it shall be furnished and installed by the Contractor in accordance with the recommendations of Structural and Geotechnical Engineers engaged by the Contractor.

2. The Contractor shall engage licensed professional Structural and Geotechnical Engineers. These Engineers shall be licensed in the state where the work is occurring and they shall prepare designs for the sheeting and bracing.

3. Submit the sheeting and bracing designs to the Owner and the Engineer for the project record. The sheeting and bracing plans and calculations shall bear the professional seals and signatures of the Contractor's Engineers. These plans and calculations shall be submitted prior to the start of work.

4. The Contractor shall furnish and install the required sheeting and bracing in accord with the submitted designs. The Contractor shall include the costs for this work in his bid price for the project. No additional or separate compensation shall be allowed.

3.11 TEST PITS

A. The contractor shall excavate a test pit, to the satisfaction of the Engineer, to allow safe and effective visual examination of subsurface conditions. The methods and equipment used shall be approved by the Engineer. Upon completion, the test pit will be backfilled, compacted, and the site returned to a condition acceptable to the Engineer.

B. The Contractor shall provide an as-built conditions survey of encountered utilities and obstacles within the test pit and photographically document the test pit if Engineer is not present. Survey should be tied to the vertical and horizontal datum specified by the Engineer. The Contractor shall notify DIG SAFE, the Engineer and the City of Quincy a minimum of 72-hours prior to performing work.

C. Where test pits have been ordered, restoration materials, as required, shall be in conformance with the applicable requirements of Section 321216 – Asphalt Paving and Section 329200 – Turf and Grasses.

END SECTION 312300

INTENTIONALLY LEFT BLANK

SECTION 312313 SUBGRADE PREPARATION

PART 1 – GENERAL

1.1 DESCRIPTION

A. This Section specifies requirements for the preparation of the subgrade for and placement of granular pavement subbase and base materials.

B. The work includes:

1. Fine grading and compaction of pavement subgrade.

2. Furnishing, placing and compacting of subbase and base materials.

1.2 RELATED DOCUMENTS

A. Other specification Sections which directly relate to the work of this Section include:

1. Section 312300 – Excavation and Backfill

2. Section 321216 – Asphalt Paving

3. Section 321613.23 - Precast Concrete Curbs and Gutters

4. Section 321613.43 - Stone Curbs

5. Section 321640 – Site Cast-in-Place Concrete

PART 2 - PRODUCTS

2.1 GRAVEL SUBBASE AND BASE

A. Gravel shall conform to the requirements of Section 312300 – Excavation and Backfill, Article, 2.1(C) Gravel.

2.2 DENSE GRADED CRUSHED STONE SUBBASE AND BASE

A. Dense graded crushed stone shall conform to the requirements of Earthwork Section 312300 – Excavation and Backfill , Article, 2.1(G) Dense-graded Crushed Stone for subbase and base.

PART 3 EXECUTION

3.1 SUBGRADE PREPARATION

A. All subsurface utility construction shall be completed before fine grading is begun.

B. The pavement and curb subgrade shall be fine graded to the location, elevations and cross slope shown on the Contract Drawings.

C. Subgrades in in-situ soils in excavation areas and in embankment areas shall be compacted during fine grading to 90 percent of maximum dry density in conformance with Section 312300 – Excavation and Backfill.

3.2 SUBBASE MATERIAL PLACEMENT

A. Subbase material shall not be placed until the Engineer has approved the fine grading, compaction and condition of the subgrade.

B. Subbase material shall be placed and spread on the approved subgrade in layers not exceeding eight inches in thickness by approved self spreading equipment. Any displacement of the compacted subgrade material by the equipment shall be restored to the required grade and recompacted before placement of the subbase material.

C. Subbase material shall be compacted to 95 percent of maximum dry density in conformance with Section 312300 – Excavation and Backfill.

D. The surface of the subbase material shall be fine graded to the location, elevations and cross slope shown on the Drawings during final layer compaction operations.

3.3 BASE MATERIAL PLACEMENT

A. Base material shall not be placed until the Engineer has approved the fine grading, compaction and condition of the subbase material.

B. Base material shall be spread on the approved subbase in layers not exceeding four inches in thickness by approved self spreading equipment. Any displacement of the subbase material by equipment shall be restored to the required grade and recompacted before placement of the base material.

C. Base material shall be compacted to 95 percent of dry density in conformance with Section 312300 – Excavation and Backfill.

D. The surface of the base material shall be fine graded to the proposed location, elevations and cross slope shown on the Drawings during final layer compaction operations.

END SECTION 312313

SECTION 312319 - DEWATERING

PART 1 – GENERAL

1.1 DESCRIPTION

A. This Section specifies the requirements for control of surface and subsurface water within the site.

B. The work includes:

1. Control of surface water runoff to prevent flooding of excavations, trenches and adjacent properties, and the saturation and loosening of soils.

2. Removal of subsurface water from excavations and trenches.

3. Provision of equipment and facilities to remove sediment and control the rates and volumes of disposal of surface and subsurface waters removed from the work areas.

4. Provisions for the protection of adjacent and downgradient, properties and environmental resources.

1.2 RELATED DOCUMENTS

A. Other specification Sections which directly relate to the work of this Section include:

1. Section 311000 – Site Clearing

2. Section 311101 – Demolition

3. Section 312300 – Excavation and Fill

4. Section 312500 – Erosion Control

5. Section 334100 – Storm Utility Drainage Piping

6. Section 334900 – Storm Utility Drainage Structures

1.3 DESIGN AND PERFORMANCE CRITERIA

A. The Contractor shall design the dewatering systems to:

1. Effectively reduce the hydrostatic pressure and lower the groundwater levels to a minimum of 2 feet below the bottom of excavations;

2. Develop a substantially dry and stable subgrade for the proposed work;

3. Prevent damage to adjacent properties, buildings, structures, utilities and other facilities;

4. Ensure that, after 12 hours of initial pumping, no soil particles will be present in the discharge.

5. Retain all sediments on-site within the work area

B. Locate dewatering facilities where they will not interfere with utilities and construction work to be done by others.

C. Modify dewatering equipment and procedures when operations threaten to cause damage to new or existing facilities or adjacent areas not within the limit of work.

1.4 ACTION SUBMITTALS

A. Prior to installation of the dewatering system, submit working drawings and design data prepared by a registered professional engineer with the following information:

1. The proposed types of dewatering systems;

2. Arrangement, location and depths of system components;

3. Complete description of equipment and instrumentation to be used including installation, operation and maintenance procedures;

4. Types and sizes of filters;

5. Design calculations demonstrating adequacy of the proposed system and equipment; and

6. Provisions and methods of sediment removal and disposal of water.

7. All permits required for the work.

8. Product Data: For each type of product indicated

PART 2 – PRODUCTS

(NOT USED)

PART 3 – EXECUTION

3.1 SURFACE WATER CONTROL

A. Intercept and divert surface water runoff away from excavations through the use of dikes, curb walls, ditches, pipes, sumps or other approved means.

B. Provide and maintain ditches of adequate size to collect and prevent surface and subsurface water seepage from entering the excavations. Divert the water to settling basins or other approved equipment required to reduce the amount of fine particles before discharge into drainage pipes and natural water courses. If a drainage system or water course is silted or becomes blocked due to dewatering operation, it shall be cleaned by the Contractor at no

additional cost to the Owner. Any enforcement actions or fines resulting from improper dewatering and/or discharge of turbid water and sediment to protected areas shall be the sole responsibility of the Contractor.

3.2 DEWATERING EXCAVATIONS

A. Accomplish dewatering in accordance with the means and methods submitted as required in Article 1.4. Keep the Engineer advised of any changes required to accommodate field conditions and, on completion of the dewatering system installation, revise and resubmit the information required to show the installed system.

B. Perform dewatering operations to lower the groundwater level in excavations as required to provide a stable, dry subgrade for the prosecution of the proposed work.

C. Maintain dewatering operations in a manner that prevents buildup of excessive hydrostatic pressure and damage to structures, and the subgrade.

D. Do not allow water to accumulate in excavations. Contractor shall provide and maintain ample means and devices to remove promptly, and to dispose of properly, all water entering excavations and to keep them dry until the proposed work is completed.

E. Do not discharge water to protected environmental resources without treatment to remove suspended solids and sediments.

F. No pipe shall be laid in water. No masonry shall be laid in water, and no water shall be allowed to inundate new concrete and new brick masonry within 48 hours after installation. Contractor shall constantly guard against the possibility of flotation of pipe or structures after installation. Backfill or other means shall be placed promptly to prevent this occurrence.

3.3 RECORDS FOR WELL SYSTEMS

A. When well point, or other type of well systems, are used for dewatering, the following information shall be obtained and recorded:

1. The average flow rate and time of operation of each pump used in the dewatering system. Provide appropriate devices, such as flow meters, for observing the flow rates. Submit the data, in tabular form, during the period that the dewatering system is in operation.

2. The groundwater elevations during the period that the dewatering system is in operation. Submit observation records daily within 24 hours of reading.

3. During the initial period of the dewatering, make required observations on a daily basis. If, after a period, dewatering operations have stabilized, observations may be changed to longer intervals, as accepted by the Engineer.

END SECTION 312319

INTENTIONALLY LEFT BLANK

SECTION 312500 – EROSION CONTROL

PART 1 – GENERAL

1.1 DESCRIPTION

A. This Section specifies requirements for temporary and permanent erosion control provisions as they relate to the construction process.

B. The work includes:

1. Providing and maintaining all temporary erosion control measures shown on the Drawings and required by the Engineer during the life of the Contract to control soil erosion and water pollution.

2. The installation and maintenance of additional silt fence, berms, ditches, sedimentation basins, construction exits, fiber mats, catchbasin filters, straw, netting, gravel, trenches, mulches, grasses, slope drains and other approved erosion control devices or methods, needed to protect any areas on or off site in accordance with the Stormwater Pollution Prevention Plan to be developed by the Contractor which is required by the EPA or it's locally designated agency.

1.2 RELATED DOCUMENTS

A. Other specification Sections which directly relate to the work of this Section include:

1. Section 311000 – Site Clearing

2. Section 311101 – Demolition

3. Section 312300 – Excavation and Fill

4. Section 311400 – Earth Stripping and Stockpiling

5. Section 312319 – Dewatering

6. Section 329000 – Planting

7. Section 329200 – Turfs and Grasses

8. Section 334726 – Storm Drainage Ponds and Reservoirs

1.3 DEFINITION AND COORDINATION OF EROSION CONTROL PROVISIONS

A. Permanent erosion control measures are defined as those elements that are to be incorporated into the final project product, including but not necessarily limited to such items as; finish paving and landscape, detention basin forebays, sedimentation control structures (Contech, Stormceptor, catch basins, etc.), swales and ditches, berms, and other such items.

B. Temporary erosion control measures are defined as those elements that are required by permit approvals and necessary to be installed by the Contractor to meet Federal, State and Local regulations for the construction program, including, but not necessarily limited to, such items as; silt fences, berms, portable sedimentation basins, silt socks, check dams, and other such items, all

of which shall be removed by the Contractor after installation of permanent erosion control measures, stabilization of the site, and prior to final completion of the project.

C. The temporary control provisions shall be coordinated with the permanent erosion control features to the extent practical to ensure economical, effective and continuous erosion control throughout the construction and post-construction period.

1.4 QUALITY ASSURANCE

A. Conservation Commission Order of Conditions, **DEP File No.059-1261** is hereby incorporated into these specifications. Contractor shall prepare and post signs as required by the Order of Conditions.

1.5 PRIOR TO CONSTRUCTION

A. Prior to the start of the construction, the Contractor shall submit to the Engineer: schedules for the construction of required stormwater detention basins, temporary and permanent erosion and sediment control work, clearing and grubbing, grading, structures at watercourses, construction, and paving. No work shall be started until control schedules and methods of operations have been submitted to the Engineer.

B. Proof of submittal and receipt of an acknowledgement of the Notice of Intent for an NPDES General Permit for Construction Activities under EPA Regulations 40 CFR Parts 9, 122, 123 and 124 as further outlined in this section.

1.6 CONSTRUCTION OPERATIONS

A. When in the opinion of the Engineer it becomes necessary, the Engineer will inform the Contractor of construction procedures and operations that jeopardize erosion and sedimentation control provisions. If these construction procedures and operations are not corrected promptly, the Owner may suspend the performance of any or all construction until corrections have been made, and such suspension shall not be the basis of any claim by the Contractor for additional compensation from the Owner nor for an extension of time to complete the Work.

PART 2 – PRODUCTS

2.1 MATERIALS

A. Temporary erosion control seed for quick growing grasses such as wheat, rye or oats shall be planted only when permanent grasses (See Section 329200) cannot be planted due to the growing season. All permanent grass areas planted with temporary erosion control seed shall be replaced with permanent seed**.** Apply seed mixture at a rate of 100 pounds per acre.

Seed	% Weight	% Germination Minimum
Winter Rye	80 Minimum	85
Red Fescue (Creeping)	4 Minimum	80
Perennial Rye Grass	3 Minimum	90
Red Clover	3 Minimum	90
Other Crop Grass	0.5 Maximum	
Noxious Weed Seed	0.5 Maximum	
Inert Matter	1.0 Maximum	

B. Erosion Control Blanket/Fabric Netting—See Section 329200 – Turfs and Grasses

1. Earthblankets™ as manufactured by Phase II Stormwater Products, Inc., or approved equal.

C. Silt fence fabric shall be 100X, as manufactured by TenCate Mirafi®, or approved equal.

D. Filter fabric at construction entrance shall be 600X, as manufactured by TenCate Mirafi®, or approved equal.

E. Silt sock

1. FilterMitts™, as manufactured by Phase II Stormwater products, Inc.

PART 3 – EXECUTION

3.1 EROSION CONTROL – SILT SOCKS

A. Silt Socks shall be installed at the locations, shown on the Drawings and in general as follows:

1. Toe of slope of embankment construction to filter all runoff flowing to off-site discharges.

2. Toe of temporary earthwork stockpile slopes.

3. Across construction ditches prior to entry into drainage system or waterway, and at 50 foot intervals along the remainder of the ditch.

4. Surrounding completed drainage inlets.

5. Other locations shown on the Contract Drawings and required by laws, regulations, and permits.

B. Tightly abut silt socks to form a continuous barrier. Secure barrier in place with two stakes per silt sock. Soil shall be constructed on the upside slope of the silt socks. Deteriorated or destroyed silt socks shall be replaced immediately. Sediment shall be removed and disposed of periodically from behind the barrier. The accumulated sediment shall not be allowed to rise above the mid height of the barrier, and shall be inspected at least once every seven days, or per local and state requirements. All sediment, silt socks and appurtenances shall be removed and disposed of at the completion of the Contract.

3.2 TEMPORARY EROSION CONTROL MATS

A. Erosion control mats shall be installed in accordance with the manufacturers recommendations.

B. Areas to receive mats shall be smooth graded and compacted. Remove all rocks, dirt clods, vegetation and other obstructions that may cause damage to the mats.

C. Unroll mats parallel to the direction of water flow and lay flat against the ground. Overlap roll ends 1 to 2 feet with upslope mat on the top to prevent uplift of mat end by water flow. Overlay adjacent edges of mat by six inches. Extend mat 2 to 3 feet above the crest of steep slopes and anchor by excavating a 6 inch deep trench, and secure end of mat in trench, backfill and compact. Secure mat to the ground using staples or pins furnished by manufacturer of mat.

3.3 SILT FENCE

A. Silt fence shall be installed at locations as shown on the Drawings.

B. Supporting posts shall be spaced 4 feet on center, and driven at least one foot into the ground. Posts shall be 1-1/2 inch square or heavier wood posts, or standard steel posts.

C. Fabric shall be anchored in a 4-inch deep trench dug on the upslope side of the posts. The trench shall be at least 4 inches wide. The fabric shall be laid in the trench, backfilled and compacted.

D. Fabric rolls shall be spliced at posts. The fabric shall be overlapped 6 inches, folded over and securely fastened to posts.

E. Silt fences shall be inspected immediately after each storm event and at least daily during prolonged rainfall.

3.4 CONSTRUCTION REQUIREMENTS – TEMPORARY SEDIMENT CONTROL

A. The Contractor shall construct all permanent erosion and sediment control features at the earliest practical time as outlined in the accepted schedule. Temporary erosion and sediment control measures shall be used to correct conditions that develop during construction which were unforeseen, but are needed prior to installation of permanent control features, or that are needed temporarily to control erosion or sedimentation which develops during construction operations.

B. Where erosion is likely to be a problem, clearing and grubbing operations shall be scheduled and performed so that grading operations and permanent erosion and sediment control features can follow immediately thereafter, if conditions permit; otherwise, temporary control measures will be required between successive construction stages.

C. Contractor shall be responsible for controlling erosion within the project area and retaining sediment on-site away from sensitive environmental resources. Any fines, construction delays, remedial actions, or incarceration resulting from the Contractor's failure to comply with these provisions shall be the responsibility of the Contractor and not the Owner.

D. Failure by the Contractor to control erosion, pollution, and siltation shall be cause for the Owner to employ outside assistance to provide the necessary corrective measures. The cost of such assistance, including engineering costs, will be charged to the Contractor and appropriate deductions made to the Contractor's monthly progress payment request.

E. The Contractor shall remove and properly dispose of sediment from control facilities as required by the Engineer. The Contractor shall modify and improve erosion and sedimentation control facilities and replace deteriorated silt socks and other devices as required by the Engineer.

F. Minimum temporary and permanent erosion and sedimentation control measures are shown on the Drawings. The Contractor shall strictly adhere to the minimum provisions shown. Additionally, temporary measures shall be selected and constructed by the Contractor in consultation with the Engineer to accommodate changing field conditions that develop during construction.

G. The temporary sedimentation basins shall be maintained from the start of construction until construction of the permanent detention basins and/or stormwater system is completed and perimeter areas are stabilized. A temporary outlet shall be constructed above the expected sediment levels. Construction of the basins shall be sequenced so that the temporary outlet is installed and basin embankment is constructed with the material available from the initial site excavations.

H. Per NPDES requirements, in disturbed areas where construction has permanently or temporarily ceased, the area must be stabilized within 14 days. If earth disturbing activities will resume within 14 days, temporary stabilization is not required.

I. All disturbed areas shall be re-vegetated by loaming and seeding unless otherwise noted on the approved plan.

3.5 MAINTENANCE OF EROSION CONTROL MEASURES

A. The Contractor shall check the condition of erosion and sedimentation control devices daily and maintain them in good operating condition. Silt socks shall be replaced when deteriorated.

B. The Contractor shall inspect the condition of diversion dikes and ditches, filter berms, interceptor dikes, sediment basins and other erosion and sedimentation control devices after each rainstorm and during major storm events. Repairs shall be made as necessary.

C. During construction, temporary outlets of the drainage systems shall direct the flow to temporary or permanent sedimentation basins.

D. Temporary soil erosion and sedimentation control devices shall be removed and adjacent areas outside the limits of grading restored upon completion of the work or when required by the Engineer.

END SECTION 312500

SECTION 321216 ASPHALT PAVING

PART 1 – GENERAL

1.1 DESCRIPTION

A. Work under this section consists of furnishing hot mix asphalt (HMA) pavement (On the drawings, this is also referred to as "bituminous concrete pavement".) composed of mineral aggregate, reclaimed asphalt pavement (RAP), asphalt binder material and an anti-strip additive (if required), that are mixed in a central mixing plant and then placing the mix on a prepared course in accordance with these specifications and conformance to the lines, grades, thicknesses and typical cross sections as shown on the plans or as directed by the Owner.

B. The work includes:

1. Preparation for HMA paving and furnishing and installing HMA.

2. HMA overlays over existing pavement, including surface preparation, and leveling courses, tack coating and all other associated operations required.

3. Sawcutting existing pavements.

4. Micromilling existing pavements. This work shall consist of micromilling and removal of existing Hot Mix Asphalt (HMA) pavement courses from the project by the Contractor. Unless otherwise specified, the milled material shall become the property of the Contractor.

C. Acceptance of plant produced material for gradation, asphalt content, and air voids shall be determined by the owner in accordance with the requirements of Article 3.9 ACCEPTANCE CRITERIA.

1.2 RELATED DOCUMENTS

A. Other specification Sections which directly relate to the work of this Section include:

1. Section 312300 – Excavation and Fill

2. Section 312313 – Subgrade Preparation

3. Section 321613.43 – Stone Curbs

4. Section 321723 – Pavement Markings

1.3 REFERENCE STANDARDS

A. References herein are made in accordance with the listed specific standards of the following organization and Work under this Section shall conform to the latest edition, unless modified by these specifications.

AASHTO — American Association of State Highway and Transportation Officials
ASTM — American Society for Testing and Materials
AI — Asphalt Institute
FHWA — Federal Highway Administration

MHD/MDPW — Massachusetts Department of Public Works, Standards Specifications for Highways and Bridges
NETTCP — New England Transportation Technician Certification Program

1.4 WEATHER LIMITATIONS

A. Construct pavement when atmospheric temperature is above 40°F, the base is not frozen, and there is not any film (free standing) of water on the base to be paved.

B. The required temperature of the HMA mixture, within a tolerance of plus or minus 15°F, when delivered at the site, will be governed by the temperature of the base upon which the mix is placed, as follows:

TABLE I

Base Temperature in Degrees F	Required Material Temperature in Degrees F For Course Thickness in Inches			
	1	1-1/2	2	3 and Greater
35-40	-	305	295	280
41-50	310	300	285	275
51-60	300	295	280	270
61-70	290	285	275	265
71-80	285	280	270	265
81-90	275	270	265	260
91 & over	270	265	260	255

C. Tack coat shall be applied only when the ambient temperature is above 40°F, and when the temperature has been above 35°F for 12 hours immediately prior to application. Do not apply when base is wet, contains excess moisture, or during rain.

1.5 ACCESSIBILTY COMPLIANCE

A. Special attention is to be given to compliance with the Americans with Disabilities Act (ADA) and the requirements of the Massachusetts Architectural Access Board (MAAB).

1. Slopes: the cross pitch (perpendicular to travel) for walkways shall be constructed at 1.5% (2% maximum, 1% minimum). The longitudinal slope (parallel to travel) for walkways shall not exceed 4.5%. The slope of handicapped curb cuts shall be constructed at 7% (8% maximum).

2. Verify slopes with a 2-foot electronic "Smart Level". Pedestrian pavements that do not meet these requirements shall be replaced at the Contractor's expense.

3. A 5'-0" minimum level (1.5% pitch) area shall be provided at entrances to buildings, which are at an exterior grade continuous with the interior floor grade. Puddling of water at the entrances shall not be allowed.

B. These requirements supersede the grades shown on the plans. If these requirements cannot be met with the grades shown on the plans, notify the Owner's representative immediately for direction.

C. The location and construction of handicapped curb cuts shall be reviewed and approved by the Municipal Engineer prior to construction.

1.6 SUBMITTALS

A. Job Mix Formula (JMF): No HMA shall be produced until a JMF has been submitted by the Contractor and reviewed by the Owner's representative. The HMA shall be designed using procedures contained in Chapter 5, MARSHALL METHOD OF MIX DESIGN, of the Asphalt Institute's (AI) Manual Series No. 2 (MS-2), Mix Design Methods for Asphalt Concrete, and shall meet the requirements of Table 3 and Table 4.

B. JMF Submittal: The job mix formula shall be submitted in writing by the Contractor at least 30 days prior to the start of paving operations and shall include as a minimum:

1. Percent passing each sieve size.

2. Gradation and percent of each individual aggregate or mineral filler, including source, location, and bulk specific gravity.

3. Percent of asphalt binder.

4. Performance graded asphalt binder certified test results and Material Certificate certifying the PG grade, including source and location.

5. Number of blows of hammer compaction per side of Marshall molded specimen.

6. Mixing temperature.

7. Compaction temperature.

8. Temperature of mix when discharged from the mixer.

9. Plot of the combined gradation on the Federal Highway Administration (FHWA) 0.45 power gradation curve.

10. Graphical plots of stability, flow, air voids, voids in the mineral aggregate, and unit weight verses asphalt content.

11. Percent natural sand.

12. Percent fractured faces.

13. Percent elongated particles.

14. Tensile Strength Ratio (TSR)

15. Antistrip agent – type, quantity, supplier and location.

C. Performance Graded Asphalt Binder Material: The certification(s) shall show the appropriate AASHTO and/or ASTM test(s) for each material, the test results, and a statement that the material meets the specification requirement.
Reference AASHTO MP-1 and PP6

1. Flash point
2. Rotational viscosity at 135°C and 165°C

3. Specific gravity at 25°C
4. Original G*/sinδ and phase angle at test temperature
5. RTFO percent mass loss (rolling thin film oven)
6. RTFO - G*/sinδ and phase angle at test temperature
7. PAV Residue - G*(sinδ) and phase angle at test temperature
8. Creep stiffness and m-value at test temperature
9. Direct tension results (when equipment available)
10. Strain sweep in accordance with AASHTO TP-5 (optional)
11. Physical hardening after 24 hours in accordance with AASHTO TP-1 (optional)
12. Mixing and Compaction viscosity-temperature chart

D. Asphalt Anti-Stripping Additive: This specification provides for an additive to asphalt to assist in the coating of wet aggregate and to increase the resistance of the asphalt binder coating to stripping in the presence of water. The additive shall be chemically inert to asphalt (heat stable) and when blended with asphalt shall withstand storage at a temperature of 400°F for extended periods without loss of effectiveness.

E. Testing Laboratory: The laboratory used to develop the JMF shall meet the requirements of ASTM D 3666. A certification signed by the manager of the laboratory stating that it meets these requirements shall be submitted with the JMF.

F. Certified Test Reports: Submit Certified Test Report(s)signed by the material producer and Contractor certifying that materials comply with, or exceed, the requirements herein. Owner reserves the right to employ an independent testing laboratory for testing materials included in the JMF, and Contractor shall, upon request of Owner, supply suitable quantities of these materials for such testing.

1.7 COORDINATION

A. The Contractor shall coordinate paving with all other work, especially underground utility construction, to prevent covering up unfinished or uninspected work and loss of time or labor by improper scheduling. Any repaving required shall be done at no cost to Owner.

1.8 PAVEMENT WITHIN PUBLIC RIGHT OF WAY

A. The construction of all pavements within public rights-of-way shall be in accordance with the rules, regulations and requirements of the Public Agency having control and ownership of such rights-of-way.

PART 2 – PRODUCTS

2.1 MILLING EQUIPMENT REQUIREMENTS

The milling equipment shall be self-propelled with sufficient power, traction, and stability to remove the existing HMA pavement to the specified depth and cross-slope. The milling machine shall be capable of operating at a minimum speed of 10 feet (3 meters) per minute, designed so that the operator can at all times observe the milling operation without leaving the control area of the machine, and equipped with the following:

A. A built in automatic grade control system that can control the longitudinal profile and the transverse cross-slope to produce the specified results.

B. Longitudinal controls capable of operating from any longitudinal grade reference, including string line, 30 foot (10 meter) ski minimum, 30 foot (10 meter) mobile string line minimum, or a matching shoe.

C. The transverse controls shall have an automatic system for controlling cross-slope at a given rate.

D. Cutting heads able to provide a minimum 6 foot (2 meter) cutting width and a 0 to 4 inch (0 to 100 mm) deep cut in one pass. The teeth on the revolving cutting drum must be continually maintained and shall be replaced as warranted to provide a uniform pavement texture.

E. An integral pickup and conveying device to immediately remove milled material from the roadway and discharge the millings into a truck, all in one operation.

F. All necessary safety devices such as reflectors, headlights, taillights, flashing lights and back up signals so as to operate safely in both day and night.

G. A means of effectively limiting the amount of dust escaping from the milling and removal operation in accordance with local, State, and Federal air pollution control laws and regulations.

When milling smaller areas or areas where it is impractical to use the above described equipment, the use of a smaller or lesser-equipped milling machine may be permitted when approved by the Engineer.

The Contractor shall provide a sufficient number of mechanical sweepers to ensure that the milled surface is free of millings and debris at the end of each day's milling operations. Each sweeper shall be equipped with a water tank, spray assembly to control dust, a pick-up broom, a dual gutter broom, and a dirt hopper. The sweepers shall be capable of removing millings and loose debris from the textured pavement.

2.2 MATERIALS

A. Aggregate: Aggregate shall consist of crushed stone, with or without sand or other inert finely divided mineral aggregate. The portion of the materials retained on the #4 sieve (4.75 mm) shall be known as coarse aggregate, the portion passing the #4 sieve (4.75 mm) and being retained by the #200 sieve (0.075 μm) as fine aggregate, and the portion passing the #200 sieve (0.075 μm) as mineral filler.

1. Coarse Aggregate

a. Coarse aggregate shall consist of sound, tough, durable particles, free from adherent coatings of clay, organic matter, and other deleterious substances. It shall show no more wear than thirty (30) percent loss when tested in accordance with AASHTO - T96, nor shall the sodium sulfate soundness loss exceed nine (9) percent, or the magnesium soundness loss exceed twelve (12) percent, after five cycles, when tested in accordance with ASTM C88.

b. The coarse aggregate shall not contain more than ten (10) percent, by weight, of flat or elongated pieces, when tested in accordance with ASTM D4791 at a ratio stated within the standard specifications, or in lieu of, 3:1. A flat particle is one having a ratio of width to thickness greater than the stated ratio; an

elongated particle one having a ratio of length to width greater than the stated ratio. An aggregate particle whose maximum length is the stated ratio times its maximum thickness is considered flat and elongated.

2. Fine Aggregate

a. Fine aggregate shall consist of clean, sound, durable, angular particles produced by crushing natural stone, or gravel that meets the requirements for wear and soundness specified for the coarse aggregate. The aggregate particles shall be free from coatings of clay, silt, or other objectionable matter and shall contain no clay balls. The fine aggregate, including any blended material for the fine aggregate, shall have a plasticity index of not more than 6 and a liquid limit of not more than 25 when tested in accordance with AASHTO T89 and AASHTO T90.

b. Fine aggregates shall have sand equivalent values of 40 or greater when tested in accordance with AASHTO T176. The sand equivalent value shall be determined for the combined mix aggregates, including coarse and fine aggregates and mineral filler portions.

c. In the fine aggregate sieve analysis passing #4 (4.75mm), the amount between two successive sieves #16, #30, #50, and #100 shall not exceed 33% of the fine aggregate total.

d. The fine aggregate, as delivered to the mixer, shall meet the following gradation requirement:

TABLE 2

	Percent Passing	
Sieve	**Minimum**	**Maximum**
3/8 inch	95	100
No. 8	70	95
No. 50	20	40
No. 200	2	16

3. Mineral Filler: If filler, in addition to that naturally present in the aggregate, is necessary, it shall meet the requirements of AASHTO M17.

B. Recycled Asphalt Pavement (RAP): The use of a maximum of 10 % recycled asphalt pavement (RAP) will be allowed in the HMA surface courses. All other HMA mixtures may contain a maximum of 25% RAP by mass of the entire mixture.

1. The RAP, incorporated into the HMA mixtures, shall be maintained as a separate captive stockpile and shall not be added to without prior approval. RAP shall consist of asphalt pavement recovered by cold milling or other removal techniques. The RAP shall be crushed so that 100 percent passes the 3/4-inch sieve, or a smaller size depending on the mixture being produced. The Contractor shall assure that the RAP is free from contaminating substances such as joint seal compound.

2. The coarse aggregate in the RAP shall be crushed stone and the top-size shall not exceed the maximum aggregate size established by the JMF. The final HMA mixture containing RAP shall conform to all the specification requirements contained herein.

3. For mixtures containing 15% or less RAP, the asphalt binder shall be a PG 64-28. For mixtures containing greater than 15% and up to 25% RAP, the asphalt binder grade shall be a PG 58-34.

4. For design purposes, the specific gravity of the combined aggregate blend with RAP used in a HMA mixture shall be determined in accordance with the attached test method for BULK SPECIFIC GRAVIY OF AGGREGATE BLENDS WITH RAP.

C. Asphalt Binder Material: The types, grades, controlling specifications, and maximum mixing temperatures for the asphalt binder materials shall conform to the following:

THE PGAB GRADE SELECTED FOR THIS CONTRACT IS PG 64-28 and PG 58-34 as applicable. If traffic speed and/or level warrant, the PGAB may be adjusted by the Owner for the Design Traffic conditions in accordance with Table below:

SUPERPAVE PGAB Adjustment for Design Traffic Conditions

Traffic Loading	**Adjustment to PGAB Grade**
Standing (<20 km/h)	Increase high temperature grade by 2 grades (12° C). Use low temperature grade as determined by LTTP BIND software.
Slow Transient (20 to 70 km/h)	Increase high temperature grade by 1 grade (6° C). Use low temperature grade as determined by LTTP BIND software.
Traffic Level (ESALs)	**Adjustment to PGAB Grade**
1×10^7 to 3×10^7	Consideration should be given to increasing high temperature grade by 1 grade (6° C). Use low temperature grad as determined by LTPP BIND software
$>3 \times 10^7$	Increase high temperature grade by 1 grade (6° C). Use low temperature grade as determined by LTTP BIND software.

The blending at the HMA plants of PG binder from different suppliers is strictly prohibited. Contractors may switch to another approved source of PG binder, upon written notification to the Owner, and by certifying that the tank to be utilized has been drained to an un-pumpable condition. The tank shall not retain more than 0.5% in volume capacity of previous residue source. Contractors who blend PG binders will be reclassified as a supplier and required to certify the binder in accordance with AASHTO MP1 and AASHTO PP-26. Also if any modifications, blending, or addition of additives occurs, the Contractor shall re-certify the material in accordance with AASHTO MP1 and AASHTO PP-26.

D. Tack Coat: Emulsified asphalt; AASHTO M140/ASTM D 997 or AASHTO M 208/ASTM D 2397, RS-1 or CRS-1.

E. Mineral Filler: Rock or slag dust, Portland cement, or other inert material complying with AASHTO M 17/ASTM D 242.

F. Anti-stripping additive: Shall be incorporated and thoroughly dispersed in the asphalt binder material in an amount equal to the percent by weight established by the job mix

formula. This percent is based on the efficiency of the additive as determined by laboratory tests. The treated composite mixture shall have a minimum tensile strength ratio (TSR) of not less than 75, when tested in accordance with AASHTO T283 with the freeze/thaw cycle. The specimens for the AASHTO procedure shall be 4" (100mm) in diameter, compacted with the Marshall hammer or the Superpave gyratory compactor to the desired air void level of 7.0 ± 1.0%. If the TSR ratio is less than 75, the aggregates shall be treated with an approved antistrip in sufficient quantity to produce acceptable results. The hot mix asphalt materials and asphalt binder material that require antistrip additives (either liquid or mineral) shall continue to meet all requirements specified herein for binder and HMA. The anti-strip agent shall be included in the bid price.

G. Hot Mix Asphalt: Plant mix may be composed of a homogeneous mixture of aggregate, filler if required, asphalt binder, and/or additives, combined to meet the composition limits by weight and other characteristics as specified. The several aggregate fractions shall be sized, uniformly graded and combined in such proportions that the resulting mixture meets the grading requirements of the following specifications:

TABLE 3
SIEVE ANALYSIS OF MIX
PERCENT BY WEIGHT PASSING

Sieve	Intermediate Course	Modified Top	Top Course	Dense Mix
2 inch				
1 inch		100		
3/4 inch	100	95-100		
5/8 inch				
1/2 inch	65-80	80-100	100	100
3/8 inch		68-88	80-100	80-100
No. 4	48-65	48-68	50-76	55-80
No. 8	37-51	33-53	37-54	48-63
No. 16		20-40	26-40	36-49
No. 30	17-30	14-30	17-29	24-38
No. 50	10-22	9-21	10-21	14-27
No. 100		6-16	5-16	6-18
No. 200	0-6	2-6	2-7	4-8
PGAB (%)	5.0—6.0	5.0-6.0	5.5—7.0	7—8
Temp. Mix (°F)	265—325	265-325	265—325	265—325
Marshall Blows	50	75	50	50
Stability, lbs. (min.)	1200	1500	1200	1000
Flow, hundredths of an inch	8—16	8-16	8—16	8—16
Percent Air Voids	3.0—6.0	3.0-5.0	3.0—5.0	3.0—6.0

1. The mineral aggregate shall be of such size that the percentage composition by weight, as determined by laboratory sieves, will conform to the gradation or gradations specified in Table 3 when tested in accordance with AASHTO Standards T27 and T11.

2. The gradations in Table 3 represent the limits, which shall determine the suitability of aggregate for use from the sources of supply. The aggregate, as selected (and used in the JMF) and blended, shall have a gradation within the limits designated in

Table 3 and shall not vary from the low limit on one sieve to the high limit on the adjacent sieve, or vice versa, but shall be well graded from coarse to fine.

3. Deviations from the final approved mix design for gradation of aggregates shall be within the tolerances for individual measurements as specified in these requirements. The job mix formula tolerances will apply if they fall outside the grading band in Table 3. All mixture furnished for the work shall conform to the job mix formula within the tolerance ranges as specified.

4. The asphalt binder content (PGAB percentage) shall meet the minimum requirements stated in Table 3 for each mixture type. The asphalt binder content of the mixture shall be calculated on the percentage basis by weight of the total mix.

5. The maximum size aggregate used shall not be more than one-half of the thickness of the compacted course being constructed on a prepared surface or that which can be placed to achieve specification requirements. The maximum size is defined as one sieve size larger than the nominal maximum size. The nominal maximum size is defined as one sieve size larger than the first sieve to cumulatively retain more than 10 percent.

H. Additional Criteria

1. In addition to the above Marshall requirements, the mixtures shall also conform to the following:

TABLE 4
MINIMUM PERCENT VOIDS IN MINERAL AGGREGATE

U.S.A. Standard Sieve Designation Inches	Nominal Maximum Particle Size Inches	mm.	Minimum Voids in Mineral Aggregate Percent
1/2	0.500	12.5	16
3/4	0.750	19.0	15
1	1.000	25.0	14

2. Voids in mineral aggregate (VMA), for each plant sample, shall be computed in accordance with the procedures contained in Chapter 5, MARSHALL METHOD OF MIX DESIGN, of the Asphalt Institute's Manual Series No. 2 (MS-2), Mix Design Methods for Asphalt Concrete.

3. Each mixture shall be evaluated for stripping by performing indirect tensile tests on compacted mixtures. If the Tensile Strength Ratio (TSR) of the composite mixture, as determined by AASHTO T283 with freeze/thaw cycle, is less than 75, the aggregates shall be rejected or the asphalt treated with an approved anti-stripping agent. The amount of anti-stripping agent added to the asphalt shall be sufficient to produce a TSR of not less than 75. If an antistrip agent is required, it will be provided by the Contractor at no additional cost.

2.3 HMA FOR SIDEWALKS AND DRIVEWAYS

A. HMA for sidewalks and driveways shall conform to the requirements for dense mix--the maximum allowable percentage of wear, as determined by the L.A. Abrasion Test (AASHTO-T96), shall be 35 percent.

PART 3 - EXECUTION

3.1 GENERAL

A. The Contractor shall install all pavements in the location and to the grades shown on the Drawings, or approved by the Owner. The type and thickness of pavement courses shall be as shown on the Drawings.

B. Equipment: Maintain equipment in satisfactory operating condition and correct breakdowns in a manner that will not delay or be detrimental to progress of paving operations.

3.2 MILLING OPERATIONS

A. The milling operations shall be scheduled to minimize the duration and placement of traffic on the milled surface. The milling operations shall not proceed more than 3 miles ahead of the paving operations. Under no circumstances shall the milled surface be left exposed to traffic for a period exceeding seven days. The Engineer may allow the Contractor to adjust the above limitations on milling production when necessary.

B. The Contractor shall coordinate milling and paving operations to minimize the exposure of milled surfaces to traffic. The Contractor shall ensure that milled surfaces are overlaid in a timely manner to avoid damage to the pavement structure. Any damage to the pavement structure resulting from extended exposure of the milled surface to traffic shall be repaired as directed by the Engineer at the Contractor's expense.

C. The existing pavement shall be removed to the average depth shown on the plans, in a manner that will restore the pavement surface to a uniform cross-section and longitudinal profile. The longitudinal profile of the milled surface shall be established using a 30 foot (10 meter) mobile ski, mobile string line, or stationary string line. The cross-slope of the milled surface shall be established by a second sensing device or by an automatic cross-slope control mechanism. The Contractor will be responsible for providing all grades necessary to remove the material to the proper line, grade, cross section, superelevation, and transitions shown on the plans or as directed by the Engineer. The requirement for automatic grade or slope controls may be waived by the Engineer in locations warranted by the situation, including intersections and closely confined areas.

D. The Engineer may adjust the average milling depth specified on the plans by ± 3/4" (± 20mm) during each milling pass at no additional payment to minimize delamination of the underlying pavement course or to otherwise provide a more stable surface. If delamination or exposure of concrete occurs when milling a HMA pavement course from an underlying Portland Cement Concrete (PCC) pavement, the Contractor shall cease milling operations and consult the Engineer to determine whether to reduce the milling depth or make other adjustments to the operation.

E. Throughout the milling operation, protection shall be provided around existing catch basin inlets, manholes, utility valve boxes, and any similar structures. Any damage to such structures as a result of the milling operation is the Contractor's responsibility and shall be repaired at the Contractor's expense. To prevent the infiltration of milled material into the storm sewer system the Contractor shall take special care to prevent the milled material from falling into the inlet openings or inlet grates. Any milled material that falls into inlet openings or inlet grates shall be removed at the Contractor's expense.

F. All permanent limits of the milled area shall be sawcut or otherwise neatly cut by mechanical means to provide a clean and sound vertical face. No vertical faces, transverse or longitudinal, shall be left exposed to traffic. If any vertical face is formed in an area exposed to traffic a temporary paved transition with a maximum 12:1 slope shall be established. If the milling machine is used to temporarily transition the milled pavement surface to the existing pavement surface, the temporary transition shall be constructed at a maximum 12:1 slope.

G. Prior to opening a milled area to traffic, the milled surface shall be thoroughly swept with a mechanical sweeper to remove all remaining millings and dust. This operation shall be conducted in a manner so as to minimize the potential for creation of a traffic hazard and to comply with local, State, and Federal air pollution control laws and regulations. Any damage to vehicular traffic as a result of milled material becoming airborne is the responsibility of the Contractor and shall be repaired at the Contractor's expense. Temporary pavement markings shall be placed in accordance with the provisions of Section 321723 – Pavement Markings.

3.3 MILLED SURFACE INSPECTION

A. The milled surface shall provide a satisfactory riding surface with a uniform textured appearance. The milled surface shall be free from gouges, excessive longitudinal grooves and ridges, oil film, and other imperfections that are a result of defective equipment, non-uniform milling teeth, improper use of equipment, or otherwise poor workmanship. Any unsatisfactory surfaces produced shall be corrected by remilling at the Contractor's expense and to the satisfaction of the Engineer.

B. The Contractor shall micromill a control strip. The control strip shall be 500 feet minimum in length with a uniformly textured surface and cross slope, as approved by the Engineer.

The micromilled surface of the control strip shall provide a satisfactory riding surface with a uniform textured appearance. The micromilled surface shall be free from gouges, excessive longitudinal grooves and ridges, oil film, and other imperfections that are a result of defective equipment, non-uniform milling teeth, improper use of equipment, or otherwise poor workmanship. Any unsatisfactory surfaces produced in the control strip shall be corrected by additional micromilling at the Contractor's expense and to the satisfaction of the Engineer.

C. The micromilled pavement surface shall have a transverse pattern of 0.2 – 0.3 inch center to center of each strike area. The Contractor shall perform surface texture measurements with a 10 foot (3 meter) straightedge in the transverse direction across the milled surface. The milled surface shall have a texture such that the variation from the edge of the straightedge to the top of ridges between any two ridge contact points shall not exceed 1/8 inch (3 mm). The difference in height from the top of any ridge to the bottom of the groove adjacent to that ridge shall not exceed 1/16" (1.6 mm). Any point in the surface not meeting these requirements shall be corrected as directed by the Engineer at the Contractor's expense.

3.4 PREPARATION

A. Proof roll prepared base material surface to identify areas requiring removal and recompaction, and to provide a uniform degree of compaction over the entire pavement area.

B. Do not begin paving work until deficient base material areas have been corrected and are ready to receive paving. Paving shall not be applied until the Owner inspects and approves the finished base.

C. Check all frames, covers, grates, water valve boxes and other miscellaneous castings that are located in the proposed pavement areas to ensure that all have been correctly positioned and set to the proper slope and elevation. All covers and grates shall be set flush with the required finished surface. No depressions or mounds will be permitted in the pavement to accommodate inaccuracies in the setting of castings.

D. All vertical surfaces of structures and existing concrete surfaces in contact with new hot mix asphalt pavement shall be painted with a uniform coating of an approved tack coat material. Extreme care shall be exercised in the application of this material to prevent splattering or staining of surfaces that will be exposed after the paving is completed. Surfaces that are stained as a result of the Contractor's operation shall be repaired or replaced at no additional cost to the Owner.

E. All existing paved surfaces to be overlaid shall be thoroughly cleaned by a self-propelled sweeper. Areas inaccessible by power sweeper shall be broom swept until the pavement surface is clean.

3.5 APPLICATION

A. Tack Coat

1. Apply to contact surfaces of all cement concrete and other surfaces abutting or projecting into pavement.

2. Apply tack coat to existing pavement surfaces to receive HMA overlay at a rate of 0.03 to 0.06 gallons per square yard of residual asphalt on the surface.

3. When the intermediate (binder) course pavement is exposed to construction and or local traffic for more than 30 days or when the surface becomes contaminated with silt, a tack coat shall be applied prior to the surface course pavement at a rate of 0.03 to 0.06 gallons per square yard of residual asphalt on the surface.

4. Allow to dry until at proper condition to receive paving.

B. Weather Limitations: The hot mix asphalt shall not be placed when weather conditions of fog or rain prevail or when the pavement surface or base shows signs of free moisture (film of water). When the surface temperature of the underlying course is less than 50°F (10°C) the Contractor shall determine the time available for compaction. The time available for compaction shall be calculated based on the time, date, air temperature, average wind speed, sky conditions, latitude, mix type, PG grade, lift thickness, mix delivery temperature, existing surface type, existing moisture content of surface, existing state of moisture in surface, and surface temperature.

The information regarding the air temperature, average wind speed, sky conditions, mix delivery temperature, and existing moisture conditions shall be evaluated by the Owner and a Contractor's representative located at the paving operation. The estimated time available for compaction shall be provided by the Contractor to the Owner. The Owner and the Contractor shall determine if there is an adequate amount of time available to compact the mixture. Options can be explored to extend the time available for compaction. If there is an adequate amount of time available to compact the mixture, the temperature

requirements may be waived by the Owner; however all other requirements including compaction shall be met. The Contractor assumes responsibility for constructing the pavement to meet compaction and specification requirements.

The Owner will not permit work to continue when overtaken by sudden storms until the pavement surface shows no signs of free moisture. The material in transit at the time of shutdown will not be placed until the pavement surface shows no signs of free moisture, provided the mixture is within temperature limits as specified

3.6 HOT MIX ASPHALT PAVEMENT PRODUCTION AND PLACEMENT

A. Asphalt Binder Material: The Contractor shall set aside one (1) 1-qt samples of the asphalt binder material obtained from each truckload, shipment, or equivalent of asphalt binder material shipped to the production facility. Each sample shall be labeled with the PG grade, source and batch number, quantity, project name, plant, date, and the sampling inspector. The Contractor shall maintain documentation in the form of a Materials Certificate of each shipment, with a copy attached to each quart sample.

After receiving the quart samples, obtained by the Contractor, the Owner may test the samples for verification of the performance grade. Material shall conform to the specification requirements for the applicable performance grade as specified herein. Material not conforming to specification requirements shall be subject to corrective action, production suspension, rejection, removal, or reduced payment as determined by the Owner.

B. Job Mix Formula (JMF): No HMA shall be produced until a JMF has been submitted by the Contractor and approved by the Owner. The HMA shall be designed using procedures contained in Chapter 5, MARSHALL METHOD OF MIX DESIGN, of the Asphalt Institute's (AI) Manual Series No. 2 (MS-2), Mix Design Methods for Asphalt Concrete, and shall meet the requirements of Table 3 and Table 4 in this specification.

All tests for initial aggregate submittals necessary to determine compliance with requirements specified herein shall be made by the Contractor.

A separate job mix formula shall be submitted for each mixture and each approved RAP stockpile (the stockpile shall be of a uniform quality throughout).

C. Sampling: The Contractor shall submit representative samples from actual sources of supply for all aggregates to be used for the production of HMA. ASTM D75 shall be used in sampling coarse aggregate and fine aggregate, and ASTM C 183 shall be used in sampling mineral filler. Sampling may be observed and supervised by the Owner or his representative. No aggregate shall be used in the production mixtures without prior approval.

The approved JMF for each mixture shall be in effect until modified in writing by the Contractor. Should a change in sources of materials be made, a new JMF must be developed and approved before the new material is used. All mixture furnished for the work shall conform to the job mix formula within the tolerance ranges as specified.

D. JMF Tolerances: The job mix formula with the allowable tolerances shall govern the production limits for the aggregate gradation for each mixture. Liquid asphalt contents shall be within the limits stated in Table 5.

TABLE 5
JOB MIX FORMULA TOLERANCES
(BASED ON A SINGLE TEST)

Material	Tolerance Plus or Minus
Aggregate passing No. 4 sieve or larger	6 percent
Aggregate passing No. 8 and No. 16 sieves	5 percent
Aggregate passing No. 30 sieve	4 percent
Aggregate passing No. 50 and No. 100 sieves	3 percent
Aggregate passing No. 200 sieve	2 percent
Asphalt Binder	0.4 percent
Temperature of Mix	20 degrees F (-7 C)

E. Hot Mix Asphalt Mixing Plants, Haul Vehicles, Pavers and Compactors: Shall conform to MHD 1995 Standard Specifications for Highways and Bridges, Section 460, unless modified herein.

F. Sampling Platform: A safe and adequate platform or catwalk with stairway and railing shall be provided to accommodate the inspector while checking temperatures and obtaining samples of the mixture from haul vehicles. The height of the platforms and raised platforms shall be adequate to accommodate safe acquisition of mix samples from the type of hauling unit(s) being utilized on the project.

G. Testing Laboratory: The Contractor or producer shall provide a fully equipped asphalt testing laboratory for control and acceptance testing functions during periods of mix production, sampling, and testing, and whenever materials subject to the provisions of these specifications are being supplied or tested. The laboratory shall provide adequate equipment, space, and utilities as required for the performance of the specified tests. The laboratory and all testing equipment shall be located at the production facility. The Owner shall have priority in the use of the equipment necessary for acceptance testing. The equipment shall conform to the applicable ASTM and AASHTO specification requirements for the specific testing being performed.

Laboratory shall be in compliance with ASTM D3666 latest edition.

The laboratory shall contain all of the equipment necessary to perform testing in accordance with ASTM and AASHTO standards referenced herein and with MHD Standard Specifications for Roads and Bridges, latest edition, in addition to, those requirements listed below:

Electronic Balance: 20,000gm capacity minimum, sensitivity 0.1gm.

Marshall equipment: Automatic HMA compactor mounted in accordance with ASTM D1559 and conforming to specifications for ASTM D1559 which consists of totally enclosed, rigidly mounted operated frame, a standard circular-foot compaction hammer assembly designed to ensure an eighteen (18) inch (457mm) drop regardless of specimen height; a one-third (1/3) horsepower motor with belt guard and controls, and automatic counter that shuts off the power after the set number of hammer drops, and a standard compaction pedestal with guide pins for centering one standard (4-inch diameter) HMA mold at a time.

The Contractor shall also provide two (2) stability compaction molds conforming to ASTM D1559 and suitable for use with the automatic HMA compactor. Note: The Soiltest Model AP-800 automatic HMA compactor and AP-166 stability compaction molds have been found suitable.

Bulk Specific Gravity determination equipment (AASHTO T-166). In addition, all ancillary and miscellaneous equipment needed to perform the testing in accordance with these specifications shall be provided.

H. Temporary Storage of Hot Mix Asphalt: Use of surge bins or storage bins for temporary storage of hot mix asphalt mixtures will be permitted:

1. For hot mix asphalt containing more than 10% RAP, the storage period shall be established from the Rolling Thin Film Oven (RTFO) residue at 140°F (60°C), tested in accordance with AASHTO T240. Prior to production the Contractor shall recover, by AASHTO T170, a sufficient quantity of the RAP binder. The RAP binder shall be blended with the virgin binder at the JMF percentages. The laboratory RAP-virgin binder blend shall be subjected to the RTFO at 140°F (60°C) and the viscosity of the residue shall establish the maximum viscosity allowed for the binder after silo storage. The viscosity of the residue shall be determined in accordance with AASHTO T202 or AASHTO TP48.

2. If the Owner determines that there is an excessive amount of heat loss, segregation and/or oxidation of the mixture due to temporary storage, use of surge bins or storage bins will be discontinued.

I. Hand Work: Whenever possible, all pavement shall be spread by a self-propelled finishing machine. At inaccessible or irregular areas, pavement may be placed by hand methods. If hand methods are used, the hot mixture shall be spread uniformly to the required depth with hot shovels and lutes. After spreading, the hot mixture shall be carefully smoothed to remove all segregated coarse aggregate and lute marks. Lutes used for hand spreading shall be of the type designed for this use. Material loads shall not be dumped faster than they can be properly spread. Workers shall not stand on the loose mixture while spreading.

J. Paving Machine Placement: Upon arrival, the mixture shall be placed to the full width by a hot mix asphalt paver. It shall be struck off in a uniform layer of such depth that, when the work is completed, it shall have the required thickness and conform to the grade and contour indicated. The speed of the paver shall be regulated to eliminate pulling or tearing of the hot mix asphalt mat. Unless otherwise permitted, placement of the mixture shall begin along the centerline of a crowned section or on the low side of areas with a one-way slope. The top course in larger parking fields shall be placed in the direction of surface-water flow. The mixture shall be placed in consecutive adjacent strips having a minimum width of 10 feet except where edge lanes require less width to complete the area.

1. The longitudinal joint in one course shall offset the longitudinal joint in the course immediately below by at least 1 foot. Transverse joints in one course shall be offset by at least 10 feet from transverse joints in the previous course.

2. The placement of the material along the longitudinal joint may be performed by setting the screed to overlay the first mat. The elevation of the screed above the surface of the first mat should be equal to the amount of roll-down expected during compaction of the new mat. The overlapped material shall be bumped by the lutes, if necessary, to optimize the density along the longitudinal joint. Under no

circumstances should the overlapped material be broadcast across the mat. Excess material should be removed by hand and returned to the screed.

3. Trafficking over freshly placed surface course material shall not be permitted until the material has been compacted, and allowed to cool to a temperature of 140^0F minimum.

K. Joints — Make joints between old and new pavements, and between successive days' work, to ensure continuous bond between adjoining work. Construction joints shall have the same texture, density, and smoothness as other sections of paving. Clean contact surfaces and apply tack coat.

3.7 ROLLING AND COMPACTION

A. The mixture, after being spread, shall be thoroughly compacted by rollers having a minimum weight of 240 pounds per inch of drum width as soon as it will bear the weight of the rollers without undue displacement. The number, weight, and types of rollers and sequences of rolling operations shall be such that the required compaction and surface texture are consistently attained while the mixture is in a workable condition. Rolling shall continue until the surface is of uniform texture, true to grade and cross section, and the required field compaction is obtained. The number of rollers and passes required shall be governed by the compaction results; however, at least two rollers shall be provided for each paver employed on the paving operation. Each roller shall be operated by a competent, experienced roller operator and shall be kept in as nearly continuous operation as practicable while work is underway. A plate shall be attached to each roller showing the ballasted and unballasted weight per length-width of tread.

B. Compact mixture with hot hand tampers, hand rollers, or vibratory plate compactors in areas inaccessible by self-propelled rollers.

C. Accomplish breakdown or initial rolling immediately following rolling of joints and outside edge. Check surface after breakdown rolling, and repair displaced areas by loosening and filling, if required, with hot material.

D. Follow breakdown rolling as soon as possible, while mixture is hot. Continue rolling until mixture has been thoroughly compacted.

E. Perform finish rolling while mixture is still warm enough for removal of roller marks. Continue rolling until roller marks are eliminated and course has attained specified density.

F. Remove and replace paving areas mixed with foreign materials and defective areas and fill with fresh, hot top or intermediate course material. Compact by rolling to specified surface density and smoothness.

G. After final rolling, do not permit vehicular traffic on pavement until it has cooled and hardened. Erect barricades to protect paving from traffic.

3.8 HMA SIDEWALKS

A. Forms: Where walls, curbing or other suitable permanent supports are not present, satisfactory forms shall be installed to assist in securing alignment and adequate compaction of the courses. All forms shall be removed after paving has been completed and the area backfilled and compacted.

B. Placing HMA: The HMA walkway surface shall be laid in two courses to a depth after compaction of 2-1/2 inches. The bottom course shall be 1-1/4 inch in thickness after compaction, and its surface after rolling shall be parallel to the proposed grade of the finished surface. The top course shall be 1 inch in thickness after compaction.

Unless otherwise directed, the walkway shall have a 1.50% slope to provide for proper drainage and shall conform to handicap accessibility requirements.

1. Spreading Mixture. The mixture shall be dumped, as needed, into a self-propelled sidewalk paver, or into wheel barrows or an approved steel dump sheets outside the areas on which it is to be placed. It shall then be immediately distributed into place by means of shovels and lutes into a uniformly loose layer to the full width required and of such depth that, when the work is completed, it shall conform to the grade and surface contour required.

2. Rolling. The surface shall be rolled with a self-propelled tandem roller weighing not less than 1-1/2 tons and not more than 5 tons. In places not accessible to a power roller, compaction shall be obtained by means of mechanical rammers or by hand tampers weighing not less than 50 pounds and having a tamping face not exceeding 100 square inches.

3. Testing Surface. When tested with a 10-foot straightedge placed parallel to the centerline of the courses, there shall be no deviation from a true surface in excess of 1/4 of an inch.

3.9 FIELD QUALITY ASSURANCE

A. Independent Testing Laboratory, selected and paid for by the Owner, may be retained to perform construction testing of in-place HMA courses for compliance with requirements for density, thickness and surface smoothness. Top and base courses will be randomly cored by the testing laboratory technicians at a minimum rate of three cores for every course and construction phase or 40,000 square feet of paving, however, no less than three cores in light duty areas and three cores in heavy duty areas will be obtained.

Samples of all material including compacted specimens and certified copies of all reports and printouts shall be made available to the Owner or his representative as often as requested including:

1. Performance Graded Binders
2. Recycling agents
3. Virgin aggregates
4. Reclaimed pavement materials
5. Loose and compacted mixture specimens
6. Combined aggregate samples

B. Grade Control: Establish and maintain required lines and elevations.

C. Thickness: In-place compacted thickness shall not be less than the thickness specified on the drawings. Areas of deficient paving thickness shall receive a tack coat and a minimum 1-inch compacted thickness overlay; or shall be removed and replaced to the proper thickness, at the discretion of the Owner, until specified thickness of the course is met or exceeded, at no additional cost to the Owner.

D. Surface Smoothness: Testing shall be performed on the finished surface of each course for smoothness, using a 10-foot straightedge applied parallel with, and at right angles to centerline of paved area. The results of these tests shall be made available to the Owner upon request. Surfaces will not be acceptable if they exceed the following tolerances for smoothness:

Intermediate (binder) course:	3/8 inch
Top course:	1/4 inch

E. Check surface areas at intervals necessary to eliminate ponding areas. Remove and replace unacceptable paving as directed by Owner.

F. Compaction: The in-place compaction of each course shall be compacted to a density of at least ninety-two (92.0) percent and no more than ninety-seven (97.0) percent of the theoretical density. Density shall be calculated in accordance with one of the following standards:

1. Bulk Specific Gravity and Density of Compacted Bituminous Mixture Using Paraffin-Coated Specimens: ASTM D-1188.

2. Bulk Specific Gravity of Compacted Bituminous Mixtures Using Saturated Surface Dry Specimens: ASTM D-2726.

3. The theoretical maximum specific gravity for the mixture shall be measured for each sample in accordance with AASHTO T209, Type C, D, or E container.

Areas of insufficient compaction shall be delineated, removed, and replaced in compliance with the specifications at no additional cost to the Owner.

G. Control Strip: If it is determined, during the performance of the contract, that the material does not conform to the material acceptance requirements, the Owner may order the contractor to cease all operations and construct a CONTROL STRIP consisting of a sufficient quantity of HMA according to the JMF. The contractor shall construct a test section 300 feet (90m) long by, 20 to 30 feet (6 to 9m) wide placed in two lanes, with a longitudinal cold joint, and shall be of the same depth specified for the construction of the course which it represents. The underlying grade or pavement structure upon which the control strip is to be constructed shall be the same as the remainder of the course represented by the control strip. The equipment used in construction of the control strip shall be the same type and weight to be used on the remainder of the course represented by the control strip. A control strip may be required if a change is made in the Job Mix Formula, sources of supply, or paving and rolling equipment.

1. The mixture shall be prepared, placed, and compacted in accordance with this specification. When the control strip pavement has cooled sufficiently, a total of six, Six-inch (6") diameter core samples of the finished pavement including three (3) core samples that span the longitudinal joint shall be taken and tested for conformance to compaction requirements. The material will also be evaluated for conformance to the requirements of plant produced material.

2. If the tests by the Owner indicate that pavement does not conform to specification requirements, necessary adjustment to JMF, plant operation, placing procedures, and/or rolling procedures shall be made. A second control strip shall than be placed. If the second control strip also does not meet specification requirements, both sections shall be removed at the Contractor's expense. Additional control strips, as

required shall be constructed and evaluated for conformance to the specifications. Any additional sections that are not acceptable shall be removed at the Contractor's expense. No payment will be made for material and labor employed, either in placement or removal of the nonconforming strip.

3. In no case shall the test result of any one mat core density fall below 90% of theoretical and 88% of theoretical for joint compaction.

3.10 MATERIAL ACCEPTANCE

A. Acceptance Sampling and Testing: All acceptance sampling and testing necessary to determine conformance with the requirements specified in this section may be performed by the Owner or his representative.

1. Plant Produced Material. Plant produced material may be tested for gradation, asphalt content, and air voids on a random basis, in accordance with ASTM D3665. Sampling shall be from material deposited into trucks at the plant or from trucks at the job site. Where more than one plant is simultaneously producing material for the job, the random sample will be obtained from one facility and considered representative of the day's production.

a. Sampling. Each sample, obtained by the Owner or his representative and selected on a random basis, will consist of sufficient material for preparation of test specimens. One set of laboratory compacted specimens will be prepared for each sample in accordance with AASHTO T245, at the number of blows required by Table 3. Each set of laboratory compacted specimens will consist of two test portions prepared from the same field sample.

b. The sample of HMA may be reheated in a covered metal tin and placed in an oven to obtain the compaction temperature. The compaction temperature of the specimens will be as specified in the job mix formula.

c. Testing. Sample specimens shall be tested for bulk specific gravity in accordance with AASHTO T166 or T275; whichever is applicable, for use in computing air voids.

d. The theoretical maximum specific gravity for the mixture shall be measured for each sample in accordance with AASHTO T209, Type C, D, or E container. Samples shall be taken on a random basis, in accordance with ASTM D3665. The value used in the field placed void computations shall be the average of all maximum specific gravity measurements for each course and construction phase

e. Asphalt Binder Content: Extraction tests may be performed once per sample in accordance with AASHTO T164 or AASHTO T308 for determination of asphalt content. The weight of ash portion of the extraction test, as described in AASHTO T164, shall be determined as part of the first extraction test performed at the beginning of plant production; and as part of every tenth extraction test performed thereafter, for the duration of plant production. The last weight of ash value obtained shall be used in the calculation of the asphalt content for the mixture. If utilizing AASHTO T308 for asphalt content determination, the calibration process and calibration factor, as described in AASHTO T308, shall be determined as stated, prior to acceptance testing. A

verification shall be performed as part of every twentieth test performed thereafter or when changes in the mix are apparent.

The use of the nuclear method for determining asphalt content in accordance with AASHTO T287 is permitted, provided that it is calibrated for the specific mix being used.

f. Gradation: Aggregate gradations shall be determined once for each sample from mechanical analysis of extracted aggregate in accordance with AASHTO T 30 and AASHTO T27 (Dry Sieve). When asphalt content is determined by the nuclear method, aggregate gradation shall be determined from hot bin samples on batch plants, or from the cold feed on drum mix or continuous mix plants, and tested in accordance with AASHTO T27 (dry sieve) using actual batch weights to determine the combined aggregate gradation of the mixture.

2. Field Placed Material: Material placed in the field may be tested for mat and joint density, and compacted thickness on a random basis, in accordance with ASTM D3665. No surface course material shall be placed until an evaluation of the intermediate course for specification conformance is completed. The Owner, prior to placement of the surface course, may determine the quality and acceptance for the intermediate course.

a. Mat Compaction. The lot size shall be the total quantity of each course placed per construction phase or per 200,000 square feet maximum of construction. Three, six-inch diameter cores of finished, compacted material shall be taken by the Owner or the Owner's representative from each course and each lot, or partial lot. Core locations will be determined by the Owner on a random basis. Cores shall not be taken closer than 1 foot (0.3 meters) from a longitudinal joint and 10 feet (3.0 meters) from a transverse joint.

b. Joint Compaction. The lot size shall be the total length of longitudinal joints constructed by a material course placed per lot of construction. Three (3) cores of finished, compacted materials shall be taken by the Owner or the Owner's representative from each course and each lot, or partial lot. Core locations will be determined by the Owner on a random basis and be located directly over the joint, not adjacent to the joint.

c. Sampling. Samples shall be neatly cut with a core drill. The cutting edge of the core drill bit shall be of hardened steel or other suitable material with diamond chips embedded in the metal cutting edge. The minimum diameter of the sample shall be 6 inches (152.4mm). Samples that are clearly defective, as a result of sampling, shall be discarded and another sample taken. The Owner or the Owner's representative shall furnish all tools, labor, and materials for cutting samples and filling the cored pavement. Cored holes shall be filled in a manner acceptable to the Owner and within one day after sampling.

d. Testing. The bulk specific gravity of each cored sample will be measured by the laboratory technician in accordance with AASHTO T166 or T275, whichever is applicable. The theoretical maximum specific gravity shall be measured once for each plant sample in accordance with the plant-produced material section. The theoretical value used for the percent density of the core samples shall be the average of the maximum specific gravity measurements for the material course and construction lot. The percent density of each sample will be determined in accordance with AASHTO T269, using the bulk specific gravity

of each sample and the average theoretical maximum specific gravity for the material course and construction lot.

3.11 ACCEPTANCE CRITERIA

A. General: Acceptance will be based on the following characteristics of the hot mix asphalt and completed pavement on a material course and construction phase basis:

Hot Mix Asphalt Production

Plant air voids
Gradation
Asphalt binder content
Mixture Temperature

Hot Mix Asphalt Placement

Mat density
Joint density
Thickness
Inferior Material
Smoothness
Grade

1. Hot Mix Asphalt Production

a. Plant Air Voids - The average plant bulk specific gravity shall be determined per set of laboratory compacted specimens. The theoretical maximum specific gravity, for the sample, shall then be used to determine the air voids in accordance with AASTHO T269. Material shall conform to the specification requirements for air voids listed in Table 3. Material not conforming to specification requirements shall be subject to corrective action, production suspension, rejection, removal, or reduced payment.

Corrective action shall be taken by the Contractor when the calculated plant produced air voids per set of laboratory compacted specimens, fall outside the specification range by up to and including 1.5%, either on the high side or the low side. The Contractor shall be required to suspend production when the calculated air voids fall outside the specification range by more than 1.5%, either on the high side or the low side. If two consecutive calculations fall outside the specification range by up to 1.5%, either on the high side or the low side, the Contractor shall be required to suspend production. If production is suspended, the Contractor shall be required to produce material on a trial basis for testing purposes without shipment to the project. The Owner or his representative shall pay for acceptance sampling and testing for the first set of trials, necessary to determine conformance with the specification requirements. If the first set of trials does not conform to specification requirements, the Contractor shall pay for any additional trial sampling and testing for acceptance. When trials have been approved, the plant will return to its normal operation.

b. Gradation and Asphalt Binder Content: The Contractor shall take corrective action and/or suspension of production when the individual results for asphalt content and/or gradation fall outside the following control limits:

TABLE 6
CONTROL LIMITS FOR INDIVIDUAL MEASUREMENTS

	Limits	
Sieve Size	**Action**	**Suspension**
25.4 mm	0%	0%
19.0 mm	±6%	±9%
12.5 mm	±6%	±9%
9.5 mm	±6%	±9%
4.75 mm	±6%	±9%
2.36 mm	±5%	±7.5%
1.18 mm	±5%	±7.5%
0.600 mm	±4%	±5.5
0.300 mm	±3%	±4.5
0.150 mm	±3%	±4.5
0.075 mm	±2%	±3%
Asphalt Binder Content	±0.4%	±0.70%

These limits shall be applied to the target values established in the JMF. Corrective action shall be taken by the Contractor when the calculated individual result for gradation or asphalt content falls outside the target JMF value beyond the action limit listed in Table 6. The Contractor shall take the appropriate action when results indicate the material is out of tolerance. The Contractor shall be required to suspend production when the calculated individual result for gradation falls outside the target JMF value beyond the suspension limit listed in Table 6, or when the asphalt binder content is below the minimum values stated in Table 3. The Contractor shall be required to suspend production if two points in a row fall outside the Action Limits for individual measurements. If production is suspended, the Contractor shall be required to produce material on a trial basis for testing purposes without shipment to the project. The Owner or his representative shall pay for acceptance sampling and testing for the first set of trials, necessary to determine conformance with the specification requirements. If the first set of trials does not conform to specification requirements, the Contractor shall pay for any additional trial sampling and testing for acceptance. When trials have been approved, the plant will return to its normal operation.

c. Mixture Temperature: The temperature of the mixture shall be in accordance with the Performance Graded Asphalt Binder (PGAB) allowable mixing and compaction temperature range.

d. Failure to stop production and make adjustments when required due to an individual test not meeting the specified requirements shall subject all mix from the stop point to the point when the next individual test is back on or within the action limits, or to the point when production is actually stopped, whichever occurs first, to be considered unacceptable. This material shall be removed and replaced with materials that comply with the specifications at the Contractor's expense.

2. Hot Mix Asphalt Placement

a. Mat Density and Joint Density: Mat and Joint Density will be evaluated based on the test results obtained by the Owner. Sampling and testing shall be performed in accordance with Section 3.7 Field Quality Assurance.

The bulk specific gravity shall be determined for each compacted core specimen. The theoretical maximum specific gravity shall then be used to determine the density of the compacted specimen in accordance with AASHTO T269, using the bulk specific gravity of each sample and the average theoretical maximum specific gravity for the material course and construction lot.

Density $= (G_{mb}/G_{mm}) \times 100$

Where G_{mb} = bulk specific gravity of compacted specimen

G_{mm} = theoretical maximum specific gravity

HMA material shall conform to the specification requirements for density listed below. Material not conforming to specification requirements shall be subject to corrective action, production suspension, rejection, removal, or reduced payment as determined by the Owner.

1. Mat Density. The in-place density of each course shall be compacted to a density of at least ninety-two (92.0) percent and no more than ninety-seven (97.0) percent of the theoretical density as determined from field or plant samples.

2. Joint Density. The in-place density of each course shall be compacted to a density of at least ninety (90.0) percent and no more than ninety-seven (97.0) percent of the theoretical density as determined from field or plant samples.

3. Acceptance of field placed material for mat density and joint density will be based on the test results obtained by the Owner.

b. Thickness Determinations: The compacted thickness shall be evaluated based on the test results obtained by the Owner. Sampling and testing shall be performed in accordance with Section 3.7 Field Quality Assurance. The thickness requirements shall apply only when each pavement layer is specified to be a uniform compacted thickness of 1 inch (25mm) or greater. The compacted thickness of each layer of the hot mix asphalt or mixes will be measured to determine compliance with the acceptance tolerances in Table 7. Thickness shall be evaluated for compliance by the Owner to the requirements shown on the plans. The thickness shall be determined for each compacted core specimen in accordance with ASTM D3549.

TABLE 7
THICKNESS ACCEPTANCE TOLERANCES

Specified Thickness	Allowable Tolerances (T)
1 inch to 2 inches	±1/4 inch
2 inches+ to 5 inches	±3/8 inch

Over 5 inches	±1/2 inch

Material shall conform to the specification requirements for thickness listed above. Material not conforming to specification requirements shall be subject to corrective action, production suspension, rejection, removal, or reduced payment as determined by the Owner.

c. Inferior Material: The Owner may at any time, not withstanding previous acceptance, notify the Contractor of inferior material and recommend the rejection of any batch of HMA which is rendered unfit for use due to contamination, segregation, incomplete coating of aggregate, or improper mix temperature. Such recommendation may be based on only visual inspection or temperature measurements. In the event of such notification, the Contractor should evaluate and dispose of any inferior material. If inferior material is not rejected by the Contractor, the Owner will take a representative sample of the rejected material in the presence of the Contractor, and if it can be demonstrated in the laboratory, that such material was erroneously incorporated into the work, payment will not be made for that material and the Contractor will remove and replace the defective material identified by the Owner.

d. Smoothness: The finished surfaces of the pavement shall be uniform in appearance, free from irregularities in contour and texture and shall present a smooth-riding surface. Smoothness evaluation applies to all hot mix asphalt concrete roadways receiving 1.5" (38mm) or more in plan (compacted) thickness

1. The finished surface of the pavement shall not vary more than 1/4 inch (6.2mm) for the surface course and 3/8 inch (9.5mm) for the intermediate course. Each area shall be evaluated with a 10-foot (3.0m) straightedge.

2. Measurements will be made perpendicular and parallel to the paver passes at distances not to exceed 50 feet (15.2m).

3. When profile corrections are required, the Contractor shall use one or more of the following corrective methods:

   (a) Removing and replacing the entire pavement thickness;
   (b) Diamond grinding or micro milling;
   (c) Overlaying (not patching) with the specified surface course;
   (d) Removing the surface by milling and applying a lift(s) of the specified course(s);
   (e) Use of other methods that will provide the desired results;

e. Grade: The finished surface of the pavement shall not vary from the gradeline elevations and cross sections shown on the plans by more than 1/2 inch (12.70 mm). The Contractor shall remove deficient areas and replace with new material. Sufficient material shall be removed to allow at least 1.5 inches (37.5mm) of hot mix asphalt to be placed. Skin patching for correcting low areas shall not be permitted. High points may be ground off. The Contractor shall make tests for conformity with the specified crown and grade immediately after initial compaction. Any variation shall be corrected by the removal or addition of materials and by continuous rolling.

f. Shaping Edges: While the surface is being compacted and finished, the Contractor shall carefully trim the unsupported outside edges of the pavement not receiving curbing. Edges so formed shall be beveled while still hot with the back of a lute or smoothing iron and thoroughly compacted by tampers or by other satisfactory methods.

g. The corrective method(s) chosen by the Contractor shall be performed at the Contractor's expense, including all necessary equipment and traffic control.

(1) Areas of removal and replacement shall be removed the full width of the paver pass. The removal areas shall be reconstructed with a transverse butt joint, using a transverse saw cut perpendicular to the paver pass.

(2) Replacement materials shall be placed in sufficient quantity so the finished surface will conform to grade and smoothness requirements. The corrective area shall conform to all material and compaction specification requirements.

(3) When the corrective work consists of an overlay, the overlay shall cover those paver passes sufficient to correct the defects. The area overlaid shall be placed with a transverse butt joint using a transverse saw cut and asphalt removal.

(4) All materials shall meet contract requirements. The overlay shall be placed so the finished surface will conform to grade and smoothness requirements. The overlay area shall be compacted to the specified density.

(5) The Owner shall retest any sections where corrections were made to verify that the corrections produced a surface that conforms to the grade and smoothness requirements.

3.12 MEET EXISTING PAVEMENTS

A. Where new pavements will abut existing pavements, the Contractor shall sawcut the existing pavements to produce a uniform, smooth joint surface. Sawcutting of existing pavements shall be neat, straight and even lines, and done in a manner that prevents damage to the pavement to remain.

B. Full-Depth Pavement: Sawcut by approved method to the full depth of the pavement prior to placement of any new pavement. The sawcut surface shall be a neat true line with straight vertical edges free from irregularities. The sawcut surface shall be tack coated immediately prior to the installation of the new abutting HMA material to provide a bond between the old and new pavement. The new compacted pavement surface shall be finished flush with the abutting pavement.

C. HMA Overlays: The existing hot mix asphalt pavement shall be sawcut to a neat true line with straight vertical edges free of irregularities for a minimum depth of one and one half inches. Prior to completing overlays, existing pavements shall be tapered by grinding. The taper, along the entire length of the joint, shall be one and one-half inches deep at the sawcut face and shall taper to zero inches deep toward the overlay at a distance of two feet from the sawcut face in driveways and at a distance of six feet in roadways and parking areas. The taper shall be cleaned and shall receive an asphalt emulsion tack coat

immediately prior to placement of the overlay. The new compacted surface at the joint shall be flush with the abutting existing pavement.

D. Immediately prior to the placement of the HMA overlay, the sawcut edges of the existing pavement shall be tack coated to bond the new pavement to the old pavement. The new pavement surface shall be finished flush with the abutting pavement. The surface seam of the pavement joint shall be sealed with tack coat and back sanded.

END SECTION 321216

APPENDIX A TO SECTION 321216

METHOD OF TEST FOR BULK SPECIFIC GRAVITY OF AGGREGATE BLENDS WITH RAP

1.1 SCOPE

A. This test method covers the procedure to determine the bulk specific gravity (Gsb) of a combined aggregate blend with RAP used in a HMA mixture.

B. This test method may involve hazardous materials, operations, and equipment. This test method does not purport to address all of the safety problems associated with the test method's use. The test method user's responsibility is to establish appropriate safety and health practices and determine the applicability of regulatory limitations prior to use.

1.2 REFERENCED DOCUMENTS

A. AASHTO Standards
T-2 Sampling Aggregates
T-84 Specific Gravity and Absorption of Fine Aggregates
T-85 Specific Gravity and Absorption of Coarse Aggregate
T-100 Specific Gravity of Soils
T-164 Quantitative Extraction of Bitumen from Bituminous Paving Mixtures
T170 Recovery of Asphalt From Solution by Abson Method
T-209 Maximum Specific Gravity of Bituminous Paving Mixtures
T-228 Specific Gravity of Semi-Solid Bituminous Materials (Pycnometer Method)

B. Other References
MS-2 Mix Design Methods for Asphalt Concrete by the Asphalt Institute

1.3 TERMINOLOGY

Terms and Abbreviations. Definitions for terms and abbreviations shall be in accordance with the Standard Specifications.

1.4 SIGNIFICANCE AND USE

A. This test method is used to determine the bulk specific gravity of a combined aggregate blend with RAP used in HMA mixture.

B. The bulk specific gravity (Gsb) of a combined aggregate blend is calculated using an estimate of the bulk specific gravity of the aggregate in the RAP and the actual bulk specific gravity of the other aggregates.

C. The bulk specific gravity of an aggregate blend is used to perform a volumetric analysis on compacted HMA in accordance with the Mix Design Methods for Asphalt Concrete by the Asphalt Institute.

1.5 APPARATUS

Apparatus shall be as stated in the referenced test methods.

1.6 SAMPLING

Sampling shall be as stated in the referenced test methods.

1.7 PROCEDURE

A. Identify the coarse aggregate(s), fine aggregate(s), and RAP selected for use in the mix designs.

B. Identify and record the actual percentages for each of the aggregate components used in the combined aggregate blend of the mix design.

C. Obtain a representative sample of the coarse aggregate, fine aggregate, mineral filler, and RAP in accordance with the AASHTO procedures.

D. Determine and record the bulk specific gravity of each of the coarse aggregate(s) in accordance with AASHTO T-85.

E. Determine and record the bulk specific gravity of each of the fine aggregate(s) in accordance with AASHTO T-84.

F. Determine and record the maximum specific gravity of the RAP in accordance with AASHTO T-209, Type C, D, or E container.

G. Determine and record the asphalt content of the RAP using AASHTO T164.

H. Calculate and record the effective specific gravity of the RAP aggregate in accordance with the following:

Gse = (100 - Pbrap)/((100/Gmmrap) - (Pbrap/Gbrap))

Where:

Gse = Effective specific gravity of the RAP aggregate
Pbrap = Percent binder of the RAP
Gmmrap = Maximum specific gravity of the RAP
Gbrap = Specific gravity of asphalt in the RAP (AASHTO T228)

I. Calculate and record the effective specific gravity of the combined aggregate blend as follows.

$$GsbBlend = \frac{\%CA1 + \%CA2 + \%FA1 + \%FA2 + \%BHF + \%RAP}{\frac{CA1}{Gsb} + \frac{\%CA2}{Gsb} + \frac{\%FA1}{Gsb} + \frac{\%FA2}{Gsb} + \frac{\%BHF}{Gsb} + \frac{\%RAP}{Gse}}$$

Where:

GsbBlend = Bulk specific gravity of the combined aggregate blend.
Gsb = Bulk specific gravity of each respective aggregate.
Gse = Effective specific gravity of the RAP.
%CA1 = Percent of aggregate blend that is coarse aggregate #1.
%CA2 = Percent of aggregate blend that is coarse aggregate #2.
%FA1 = Percent of aggregate blend that is fine aggregate #1.
%FA2 = Percent of aggregate blend that is fine aggregate #2.

%BHF = Percent of aggregate blend that is bag house fines.
%RAP = Percent of aggregate blend that is RAP.

1.8 REPORT

Report the Gsb of the combined aggregate blend to the nearest 0.001.

INTENTIONALLY LEFT BLANK

SECTION 321613.23 PRECAST CONCRETE CURBS AND GUTTERS

PART 1 – GENERAL

1.1 DESCRIPTION

A. This Section specifies requirements for furnishing and installing, precast concrete curbs, edging and berms.

B. The work includes:

1. Furnishing and installing precast concrete curb.

2. All associated items and operations required to complete the installations, including surface preparation, concrete support, jointing and finishing.

1.2 RELATED DOCUMENTS

A. Other specification Sections which directly relate to the work of this Section include:

1. Section 311000 – Site Clearing

2. Section 311101 – Demolition

3. Section 311400 – Earth Stripping and Stockpiling

4. Section 312300 – Excavation and Fill

5. Section 312313 – Subgrade Preparation

6. Section 321216 – Asphalt Paving

7. Section 321640 – Site Cast-In-Place Concrete

1.3 REFERENCE STANDARDS

A. References herein are made in accordance with the following abbreviations and, all work under this Section shall conform to the latest editions as applicable.

B. ACI 304—Recommended Practice for measuring, mixing, transporting and placing concrete.

C. ANSI/ASTM D1751—Preformed Expansion Joint Fillers for Concrete Paving and Structural Construction (Non extruding and Resilient Bituminous Types).

D. ANSI/ASTM D1752—Preformed Sponge Rubber and Cork Expansion Joint Fillers for Concrete Paving and Structural Construction.

E. ASTM C33—Concrete Aggregates.

F. ASTM C94—Ready-Mixed Concrete.

G. ASTM C150—Portland Cement.

H. ASTM C260—Air-Entraining Admixtures for Concrete.

I. ASTM C309—Liquid Membrane-Forming Compounds for Curbing Concrete.

J. ASTM C494—Chemical Admixtures for Concrete.

1.4 SUBMITTALS

A. Submit Shop Drawings and Manufacturer's literature for granite and precast curb, edging, corners and inlets, indicating size, shape and dimensions, finish and setting method for Engineer's approval.

B. Copies of tests on representative samples of the concrete used in the manufacture of precast units showing a compressive strength of 5,000 pounds must be received by the Engineer prior to shipping any units.

C. Submit Shop Drawings and Manufacturer's literature for curbs, edging, corners and inlets, indicating size, shape and dimensions, finish and setting method for Engineer's approval.

D. As-Built Drawings

1. As-Built Drawings shall indicate the true measurements and horizontal locations of the new curb construction. As-Built Drawings shall be stamped with the seal of a Licensed Land Surveyor and Licensed Professional Engineer.

2. Submit 4 sets of 24-inch by 36-inch drawings and a digital copy in a CD format to the Engineer prior to obtaining substantial completion certificate.

1.5 DELIVERY, STORAGE AND HANDLING

A. Granite and precast curb units shall be adequately protected from damage during transit to the site.

B. Curbing shall be protected against staining, chipping, and other damage. Cracked, badly chipped, or stained units will be rejected and shall not be employed in the work.

1.6 SAMPLES

A. The Contractor shall supply to the site three samples of all curb types for approval prior to ordering materials. Approved sample material may be used in the work upon approval by the Engineer.

PART 2 – PRODUCTS

2.1 PRECAST CONCRETE CURB

A. The concrete shall have a minimum compressive strength of 5,000 psi at 28 days, and shall contain 5 to 7 percent entrained air. The material shall conform to Site Cast-in-Place Concrete, Section 321640.

B. All precast curb with radius of 100 foot or less shall be formed to the radius shown on the Drawings.

C. Precast concrete curb units shall be rub finished:

1. After the concrete has properly hardened, the exposed surfaces shall be rubbed with a #16 carborundum stone or an approved abrasive to fully remove laitance and sand grain finish. No cement shall be used in the rubbing process.

2. The finish of the units shall be uniform and shall conform to those of adjacent work in their final position.

D. Precast concrete curb sections shall be furnished with sockets in each end to receive dowels to maintain the horizontal and vertical alignment of the curb. The dowel socket shall be 11/16 inch by 2-1/2 inches. 5/8 inch by 4 inch dowels shall be provided.

2.2 CEMENT MORTAR

A. Cement mortar shall be composed of one part Portland Cement and two parts of sand by volume with sufficient water to form a workable mix. Cement shall be Portland Cement Type II.

2.3 TRANSITION SECTIONS

Horizontal transition sections shall be provided at all locations where curb sections change (i.e., vertical to sloped). Vertical transition sections shall also be provided for precast curb sections at wheelchair ramps. Vertical transition sections for granite curb shall be made as shown on the Drawings.

PART 3 - EXECUTION

3.1 GENERAL

A. Trenching, excavation, backfilling, and compaction shall be completed in accordance with Section 312300 – Excavation and Fill, except as modified within this Section.

B. Cement mortar bedding, if required, shall be placed as shown on the drawings and in accordance with Section 033000, Cast-in-Place Concrete.

3.2 PRECAST CONCRETE CURB

A. Precast units delivered to the site shall be inspected for damage, unloaded and placed along the prepared curb trench, or other designated location, with the minimum amount of handling.

1. Materials shall be handled in a manner that prevents damage to the curb units.

2. All individual pieces of curved curbing shall be marked to correspond to the radius and location where curbing is to be set.

B. Excavation shall extend 6 inches below and behind finished curb, as shown on the Drawings.

1. The gravel base shall be placed in the excavated area, compacted and graded to the proposed curb subgrade.

C. Precast concrete curb units shall be doweled together continuously to the line and grade shown on the Drawings. Any units damaged during setting operations shall be removed and replaced.

D. After the curb is set, the trench shall be backfilled immediately with approved material. The first layer shall be 4 inches in depth and compacted. The other layers shall be not more than 6 inches in depth and compacted until the trench is filled. Care shall be taken to prevent disturbing the line or grade of the curb during this procedure.

END SECTION 321613.23

SECTION 321613.43 STONE CURBS

PART 1 – GENERAL

1.1 DESCRIPTION

A. This Section specifies requirements for furnishing and installing granite curbs, edging and berms.

B. The work includes:

1. Furnishing and installing granite curb, curb inlets, and curb corners.

2. All associated items and operations required to complete the installations, including surface preparation, concrete support, jointing and finishing.

1.2 RELATED DOCUMENTS

A. Other specification Sections which directly relate to the work of this Section include:

1. Section 311000 – Site Clearing

2. Section 311101 – Demolition

3. Section 311400 – Earth Stripping and Stockpiling

4. Section 312300 – Excavation and Fill

5. Section 312313 – Subgrade Preparation

6. Section 321216 – Asphalt Paving

7. Section 321640 – Site Cast-In-Place Concrete

1.3 REFERENCE STANDARDS

A. References herein are made in accordance with the following abbreviations and, all work under this Section shall conform to the latest editions as applicable.

B. ACI 304—Recommended Practice for measuring, mixing, transporting and placing concrete.

C. ANSI/ASTM D1751—Preformed Expansion Joint Fillers for Concrete Paving and Structural Construction (Non extruding and Resilient Bituminous Types).

D. ANSI/ASTM D1752—Preformed Sponge Rubber and Cork Expansion Joint Fillers for Concrete Paving and Structural Construction.

E. ASTM C33—Concrete Aggregates.

F. ASTM C94—Ready-Mixed Concrete.

G. ASTM C150—Portland Cement.

H. ASTM C260—Air-Entraining Admixtures for Concrete.

I. ASTM C309—Liquid Membrane-Forming Compounds for Curbing Concrete.

J. ASTM C494—Chemical Admixtures for Concrete.

1.4 SUBMITTALS

A. Submit Shop Drawings and Manufacturer's literature for granite curb, edging, corners and inlets, indicating size, shape and dimensions, finish and setting method for Engineer's approval.

B. As-Built Drawings

1. As-Built Drawings shall indicate the true measurements and horizontal locations of the new curb construction. As-Built Drawings shall be stamped with the seal of a Licensed Land Surveyor and Licensed Professional Engineer.

2. Submit 4 sets of 24-inch by 36-inch drawings and a digital copy in a CD format to the Engineer prior to obtaining substantial completion certificate.

1.5 DELIVERY, STORAGE AND HANDLING

A. Granite units shall be adequately protected from damage during transit to the site.

B. Curbing shall be protected against staining, chipping, and other damage. Cracked, badly chipped, or stained units will be rejected and shall not be employed in the work.

1.6 SAMPLES

A. The Contractor shall supply to the site three samples of all curb types for approval prior to ordering materials. Approved sample material may be used in the work upon approval by the Engineer.

PART 2 – PRODUCTS

2.1 GRANITE CURB

A. Granite curb shall be basically light gray in color, free from seams and other structural imperfections or flaws which would impair its structural integrity, and of a smooth splitting appearance. Natural color variation characteristic of the deposit from which the curb is obtained will be permitted.

B. Whenever curbing is sawed, all surfaces that are to be exposed shall be thoroughly cleaned and any iron rust or iron particles removed by sand blasting or other methods approved by the Engineer and any saw mark in excess of 1/8 inch shall be removed.

C. <u>Dimensions</u>

1. The stones for the several types of granite curb shall be cut to the dimensions and curvature hereinafter needed:

Type	Min. Length	Width at Top	Depth	Minimum Width at Bottom
Highway	6 Feet	6 Inches	17 to 19 Inches	4 Inches (for 2/3 length)
Site	3 Feet	5 Inches	15-17 Inches	3-1/2 Inches (for 2/3 length)

Stones to be set on a radius of 100 feet or less shall be cut to the required curvature, unless otherwise approved and, except for making closures, shall be of the following minimum lengths:

Radius	Minimum Length
50 Feet to 100 Feet	6 Feet
25 Feet to less than 50 Feet	4 Feet 6 Inches
10 Feet to less than 25 Feet	3 Feet

D. Finish

1. Granite curb shall have a top surface free from wind, shall be peen hammered or sawed to an approximately true plane, and shall have no projections or depressions greater than 1/8 inch. The front and back arris lines shall be pitched straight and true and there shall be no projection on the back surface for 3 inches down from the top which would exceed a batter of 4 inches to 1 foot.

   The front face shall be at right angles to the planes of the top and ends and shall be smooth quarry split, free from drill holes and with no projection of more than 1 inch and no depression of more than 1/2 inch measured from the vertical plane of the face through the arris or pitch line for a distance down from the top of 8 inches. For the remaining distance, there shall be no projection or depression greater than 1 inch measured in the same manner.

   The ends of all stones shall be square with the planes of the top and face so that when the stones are placed end to end as closely as possible, no space shall show in the joint at the top and face of more than 1/2 inch for the full width of the top and for 8 inches down on the face; after which the end may break back not over 8 inches from the plane of the joint. The arris formed by the intersection of the plane of the joint with the planes of the top and exposed faces shall have no variation from the plane of the top and exposed faces greater than 1/8 inch.

2.2 GRANITE EDGING

(NOT USED)

2.3 CEMENT MORTAR

A. Cement mortar shall be composed of one part Portland Cement and two parts of sand by volume with sufficient water to form a workable mix. Cement shall be Portland Cement Type II.

2.4 TRANSITION SECTIONS

Horizontal transition sections shall be provided at all locations where curb sections change (i.e., vertical to sloped). Vertical transition sections shall also be provided for precast curb sections at wheelchair ramps. Vertical transition sections for granite curb shall be made as shown on the Drawings.

PART 3 - EXECUTION

3.1 GENERAL

A. Trenching, excavation, backfilling, and compaction shall be completed in accordance with Section 312300 – Excavation and Fill, except as modified within this Section.

B. Cement mortar bedding, if required, shall be placed as shown on the drawings and in accordance with Section 033000 - Cast-in-Place Concrete.

3.2 GRANITE CURB INSTALLATION

A. Excavation shall extend 6 inches below and behind curb, as shown on the Drawings.

1. The gravel base shall be placed in the excavated area, graded and compacted to above the proposed curb subgrade.

B. Curbing and curb corners shall be set on additional gravel spread upon the foundation. All spaces under the curb and curb corners shall be filled with gravel thoroughly compacted so that the curb and curb corners will be completely supported throughout their length. The curb shall be set at the line and grade required as shown on the plans unless otherwise directed.

C. Curb and curb corners shall be fitted together as closely as possible.

D. Immediately after the curb, curb corners and curb inlets is set, the space between it and the wall of the trench shall be filled with gravel thoroughly tamped to a depth of 6 inches, care being taken not to affect the line or grade of the curb, curb corners, curb inlets and edging. The trench shall continue to be filled with gravel and compacted in 6-inch lifts until grade is achieved. If the curb materials and trench are part of reconstruction work and existing bituminous concrete surface is to remain, then the use of concrete backfill is acceptable, to an elevation suitable to support the pavement patch or section.

E. The joints between curbstones (both front and back) shall be carefully filled with cement mortar and neatly pointed on the top and front exposed portions. After pointing, the curbstones or edging shall be satisfactorily cleaned of all excess mortar that may have been forced out of the joints.

F. Transitions from normal curb settings to wheelchair ramps shall be accomplished with transition curb as shown on the drawings. Transitions shall be of the same type curb and similar to that abutting and, if on a curve, of the same radius.

G. The ends of the stone curb at driveways and intersections shall be cut at a bevel or rounded, as shown on the Drawings.

H. If curb, curb corners, curb inlets or edging of different quarries is used on the same project, curbing of each particular quarry shall be segregated and set to give uniform appearance.

I. Procedures for removal and resetting of existing granite curb, and new granite curb, in existing pavements shall include the following:

1. Prior to excavation for existing granite curb removal, the pavement surface shall be saw cut a minimum of one foot from the face of curb.

2. Existing curb shall be carefully excavated, and removed in a manner that protects the curb and existing pavement to remain from damage.

3. Existing granite curb shall be cleaned by sandblasting as required to remove bituminous material, paint and concrete from exposed surfaces prior to resetting in the proposed work.

4. New granite curb shall be set to match the top of existing granite curb remaining in place at abutting sections and, if required, transitioned to the typical section shown on Drawings within the first section of curb. Cement concrete shall be placed along the front face of the curb as shown on the Drawings.

END SECTION 321613.43

INTENTIONALLY LEFT BLANK

SECTION 321640 SITE CAST-IN-PLACE CONCRETE

PART 1 – GENERAL

1.1 DESCRIPTION

A. This Section specifies requirements for concrete cast-in-place on the site.

B. The work of includes cast-in-place concrete pavement, bases, foundations, structures and thrust blocks.

1.2 RELATED DOCUMENTS

A. Other specification Sections which directly relate to the work of this Section include:

1. Section 311400 – Earth Stripping and Stockpiling

2. Section 312300 – Excavation and Fill

1.3 REFERENCE STANDARDS

A. References herein are made in accordance with the following abbreviations and all work under this Section shall conform to the latest editions as applicable.

American Concrete Institute (ACI)

ACI 301 -	Specifications for Structural Concrete for Building
ACI 305R -	Hot Weather Concreting
ACI 306R -	Cold Weather Concreting
ACI 316R -	Recommendations for Construction of Concrete Pavements and Concrete Bases

American Society for Testing and Materials (ASTM)

ASTM 185 -	Welded Wire Steel Fabric for Concrete Reinforcement
ASTM 615 -	Deformed and Plain Billot Steel Bars for Concrete Reinforcement
ASTM C31M	Standard Practice for Making and Curing Concrete Test Specimens in the Field.
ASTM C33 -	Concrete Aggregates
ASTM C94 -	Ready-Mixed Concrete
ASTM C143 -	Slump of Portland Cement Concrete
ASTM C150 -	Portland Cement
ASTM C171 -	Sheet Materials for Curing Concrete
ASTM C231 -	Air Content of Freshly Mixed Concrete by the Pressure Method
ASTM C260 -	Air Entraining Admixtures for Concrete
ASTM C309 -	Liquid Membrane-Forming Compounds for Curing Concrete
ASTM C494 -	Chemical Admixtures for Concrete
ASTM C1116 -	Standard Specifications for Fiber-Reinforced Concrete and Shortcrete.

Concrete Reinforcing Steel Institute (CRSI)
Manual of Standard Practice.

Americans with Disabilities Act and State Regulations

1.4 QUALITY ASSURANCE

A. Work and materials for construction of the cement concrete walks shall conform to ACI 316R. Other cast-in-place concrete shall conform to ACI 301.

B. Work, materials, and color of the wheelchair ramp paving shall conform to applicable sections of Americans with Disabilities Act (ADA) and State standards, whichever is more stringent.

C. Dimensions, locations, and details of equipment pads, anchors, supports, and similar features shown on the drawings are approximate. Manufacturer's approved shop Drawings of equipment to be supported, anchored, or contained thereby shall be consulted for exact location, size and details.

1.5 SUBMITTALS

A. Description of methods and sequence of placement for each type of specially-finished concrete, including description of methods and sequence of placement.

B. Manufacturer's product data for the following:

1. Form release agent.

2. Preformed joint filler.

3. Concrete reinforcement specification data from manufacturer.

1.6 TESTING

A. The Owner may employ an independent testing laboratory to inspect and test concrete paving and other cast-in-place concrete work.

B. When requested, Contractor shall prepare test specimens in accordance with ASTM C31M, standard cylinder size 4-inch x 8 inch.

C. Testing of materials and installed work may occur at any time during progress of the work. Rejected materials and installed work shall be removed and replaced.

PART 2 – PRODUCTS

2.1 STEEL REINFORCEMENT

A. Steel reinforcing bars shall conform to ASTM A615, Grade 60, deformed.

1. Bars employed as dowels shall be hot-rolled plain rounds.

B. Steel wire: ASTM A82, plain cold drawn steel.

C. Welded wire fabric reinforcement shall conform to the applicable requirements of ASTM A185. Fabric reinforcement shall be furnished in flat sheets. Fabric reinforcement in rolls will not be permitted.

D. Supports for Reinforcement: Bolsters, chairs, and other devices for spacing, supporting, and fastening reinforcing bars, and welded wire fabric in place shall be wire bar-type supports complying with CRSI specifications.

1. For slabs-on-grade, use supports with sand plates or horizontal runners where base material will not support chair legs.

2. For exposed-to-view concrete surfaces where legs of supports are in contact with forms, provide supports with legs that are protected by plastic (CRSI, Class 1).

2.2 PORTLAND CEMENT CONCRETE

A. Portland cement concrete shall:

1. Have a maximum water cement ratio of 0.45 conforming to ACI 316R.

2. Be Air-entrained type conforming to ASTM C94. Air content by volume shall be 6 percent ± 1 percent, and shall be tested in accordance with ASTM C260.

3. Be placed with a slump not less than 3 inches nor greater than 4 inches, determined in accordance with ASTM C143.

4. Use cement conforming to ASTM C150, Type I or II. Only one color of cement, all of the same manufacturer, shall be used for the work.

5. Use fine and coarse aggregates conforming to ASTM C33.

6. Contain a water reducing agent to minimize cement and water content of the concrete mix at the specified slump. Water reducing agent shall conform to ASTM C494, Type A.

7. Contain no calcium chloride or admixtures containing calcium chloride shall be added to the concrete. No admixtures other than those specified shall be used in the concrete without the specific written permission of the Engineer in each case.

2.3 CONCRETE AGGREGATES

A. Provide in conformance with ASTM C33.

B. Fine aggregates in conformance with ASTM C33, part 6.

C. Coarse aggregates in conformance with ASTM C33, parts 9 thru 11 and tables 2 and 3, with the following Class designations:

1. 1S – For footings and foundations not exposed to the weather.

2. 4S – For pavements, driveways, curbs, walkways, sidewalks, and retaining walls, that are exposed to the weather.

3. 1N – For pavements, driveways, curbs, walkways, sidewalks, and retaining walls that are not exposed to the weather.

D. Exposed Aggregate for ADA curb ramps shall be selected, hard, durable, washed rounded stones free of deleterious reactivity to cement with graded sizes between ½ to ¾ inch diameter nominal sieves.

2.4 COLORED CONCRETE

(NOT USED)

2.5 CURING MATERIALS FOR UNCOLORED CONCRETE

A. Curing shall be accomplished by the following methods:

1. Moist curing with burlap covering.

2. Curing paper, nonstaining, fiber reinforced laminated Kraft bituminous product conforming to ASTM C171. Four mil polyethylene sheeting may be substituted for curing paper.

3. Curing compound, a resin-base, white pigmented compound conforming to ASTM C309, Type 2.

2.6 EXPANSION JOINTS

A. Expansion joint filler shall be preformed, nonbituminous type conforming to ASTM D1752, Type II, similar to Sealtight Cork Expansion Joint Filler, manufactured by W.R. Meadows, Inc., 300 Industriral Drive, Hampshire, IL 60120; tel. (800)342-5976 or approved equivalent.

1. Premolded filler shall be one piece for the full depth and width of the joint.

B. Smooth dowel shall be hot rolled plain steel dowel bonded at one end and operating in smooth close fitting sleeve (of same material) at the other.

2.7 CONTROL JOINTS

A. Joint filler to be polyethylene foam with manufacturer's recommended sealant.

2.8 FORMS

A. Cylindrical Forms: Sonotube Fibre Forms, wax-impregnated strippable forms manufactured by Sonoco Products Company, General Products Division, ABS or PVC plastic reusable forms, or approved equivalent.

B. Forms for Exposed Finish: Plywood, metal, metal-framed plywood faced, or other acceptable panel materials. Plywood shall be APA Ref. 1 B-B (Concrete Form), Class I Exterior Grade plywood or B-B or A-C Class I high density overlay concrete form plywood. Form work materials shall produce smooth, continuous, straight and level surfaces.

C. Forms for Unexposed Finish: Plywood, lumber or metal, with lumber dressed on at least two edges and one side.

D. Form Ties: Prefabricated, adjustable length galvanized steel snap-off ties, with brackets, cones, cornerlocks and other accessories as necessary.

E. Form Release Agent: Commercial formulation compounds that will not bond with, stain or adversely affect concrete.

F. Imprinting Tools: Mats and tools used to stamp projecting texture and patterns onto plastic concrete surfaces shall be specifically designed with rigid back supports to enable a clean, sharp, stamping image. Stamps for curb ramps shall be designed to meet ADA detectable warning requirements.

2.9 FIBROUS REINFORCING

(NOT USED)

PART 3 - EXECUTION

3.1 PREPARATION OF SUBGRADE

A. The subgrade of areas to be paved shall be graded and compacted as specified in Section 31233 – Subgrade Preparation.

B. Excavation required in pavement subgrade shall be completed before fine grading and final compaction of subgrade are performed. Where excavation must be performed in completed subgrade, subbase, base, or pavement, subsequent backfill and compaction shall be performed as required by the Engineer and as specified in Section 312300 – Excavation and Fill.

C. Materials shall not be stored or stockpiled on subgrade.

D. Prepared subgrade will be inspected by the Engineer. Subgrade shall be approved for installation of the gravel base course. Disturbance to subgrade caused by inspection procedures shall be repaired.

3.2 BASE COURSE

A. Base course for concrete paving shall be pavement subbase course or gravel base materials specified in Section 312300 – Excavation and Fill, as shown on the Drawings.

B. Width of base course shall extend beyond edge of the proposed pavement as shown on the Drawings.

C. Material shall be placed in lifts no more than 6 inches thick, compacted measure. Each lift shall be separately compacted to specified density.

1. Material shall be placed adjacent to wall, manhole, catch basin, and other structures only after they have been set to required grade.

2. Rolling shall begin at sides and progress to center of crowned areas, and shall begin on low side and progress toward high side of sloped areas. Rolling shall continue until material does not creep or wave ahead of roller wheels.

3. Surface irregularities which exceed 1/2 inch as measured by means of a 10 foot long straightedge, shall be regraded and recompacted.

D. Base course shall be compacted at optimum moisture content to not less than 95 percent of maximum density as determined by ASTM D1557.

E. The base course shall be kept clean and uncontaminated. Less select materials shall not be permitted to become mixed with the base course material.

3.3 STEEL REINFORCEMENT

A. Before being placed in position, reinforcing steel shall be thoroughly cleaned of loose mill and rust scale, dirt, ice, and other foreign material which may reduce the bond between the concrete and reinforcing. Where there is delay in placing concrete after reinforcement is in place, bars shall be reinspected and cleaned when required.

B. Any bar showing cracks after bending shall be discarded.

C. Unless otherwise shown on the Drawings, reinforcing shall extend within 2 inches of form work and expansion joints. Reinforcing shall continue through control joints. Adjacent sheets of fabric reinforcing shall lap 6 inches.

D. After forms have been coated with form release agent, but before concrete is placed, reinforcing steel shall be securely wired in the required position and shall be maintained in that position until concrete is placed and compacted. Chair bars and supports shall be installed in a number and arrangement approved by the Engineer.

3.4 FORMS

A. General: Design, erect, support, brace, and maintain formwork to support vertical, lateral, static, and dynamic loads that might be applied until concrete structure can support such loads. Construct formwork so concrete members and structures are of correct size, shape, alignment, elevation, and position. Maintain formwork construction tolerances and surface irregularities complying with the following ACI 347 limits.

1. Provide Class A tolerances for concrete surfaces exposed to view.

2. Provide Class C tolerances for other concrete surfaces.

B. Construct forms to provide for openings, offsets, sinkages, keyways, recesses, moldings, chamfers, blocking, screeds, bulkheads, anchorages, and inserts, and other features required for the work. Use selected materials to obtain required finishes. Solidly butt joints and provide back-up at joints to prevent cement paste from leaking.

C. Fabricate forms for easy removal without hammering or prying against concrete surfaces. Kerf wood inserts for forming keyways, reglets, recesses, and other features for easy removal.

D. Chamfer exposed corners and edges, using wood, metal, PVC, or rubber chamfer strips fabricated to produce uniform smooth lines and tight edge joints.

E. Thoroughly clean forms and adjacent surfaces to receive concrete. Remove chips, wood, sawdust, dirt or other debris just before placing concrete. Re-tighten forms and bracing before placing concrete, as required, to prevent mortar leaks and maintain proper alignment.

3.5 INSTALLING EMBEDDED ITEMS

A. General: Set and build into formwork the anchorage devices and other embedded items required for work that is attached to, or supported by, cast-in-place concrete. Use setting drawings, diagrams, instructions, and directions provided by suppliers of items to be attached.

B. Forms for Slabs: Set edge forms, bulkheads, and intermediate screen strips for slabs to achieve required elevations and contours in finished surfaces. Provide and secure units to support screed strips using strike-off templates or compacting-type screeds.

3.6 PREPARING FORM SURFACES

A. Coat contact surfaces of forms with an approved, nonresidual, low-VOC form-coating compound before placing reinforcement.

3.7 CONCRETE PLACING

A. Equipment, methods of mixing and placing, and precautions to be observed as to weather, and condition of base shall meet the requirements of ACI 316R.

B. The Engineer shall be notified of scheduled concrete placement sufficiently in advance of start of operation to allow preliminary inspection of the work, including subgrade, forms, and reinforcing steel.

C. Work shall not be performed during rainy weather or when temperature is less than 40°F (4.4°C).

D. Adjacent work shall be protected from stain and damage. Damaged and stained areas shall be replaced or repaired to equal their original conditions.

E. Existing concrete, earth, and other water-permeable material against which new concrete is to be placed shall be thoroughly damp when concrete is placed. There shall be no free water on surface.

F. Concrete which has set or partially set, before placing shall not be used. Retempering of concrete will not be permitted.

G. Concrete shall be thoroughly vibrated, or otherwise consolidated to secure a solid and homogeneous mass, thoroughly worked around reinforcement and into corners of forms.

H. When joining fresh concrete to concrete which has attained full set, latter shall be cleaned of foreign matter, and mortar laitance shall be removed by chipping and washing. Clean, roughened base surface shall be saturated with water, but shall have no free water on surface. A coat of 1:1 cement-sand grout, approximately 1/8 inch thick, shall be well scrubbed into the thoroughly dampened concrete base. New concrete shall be placed immediately, before grout has dried or set.

3.8 FINISHING

A. Concrete surfaces shall be screeded and finished true to line and grade, and free of hollows and bumps. Surface shall be dense and smooth.

1. Finished concrete surface for concrete subbases shall be woodfloated to a slightly rough surface. Surface shall not deviate more than 1/4 inch in 10 feet.

2. Finished concrete surfaces shall be wood-floated and steel troweled, or broom finished, to a uniform surface. Surface shall not deviate more than 1/8 inch in 10 feet.

B. Horizontal surfaces of concrete surfaces which will be exposed shall be given a light broomed finish, with direction of grooves in concrete surface perpendicular to length of concrete band, slab, or pad. After concrete has set sufficiently to prevent coarse aggregate from being torn from surface, but before it has completely set, brooms shall be drawn across the surface to produce a pattern of small parallel grooves. Broomed surface shall be uniform, with no smooth, unduly rough or porous spots, or other irregularities. Coarse aggregate shall not be dislodged by brooming operation.

C. Immediately following finishing operations, arises at edges and both sides of expansion joints shall be rounded to a 1/4 inch radius. Control joints to be tooled shall be scored into slab surface with scoring tool. Adjacent edges of control joint shall at same time be finished to a 1/4 inch radius.

D. Where finishing is performed before end of curing period, concrete shall not be permitted to dry out, and shall be kept continuously moist from time of placing until end of curing period, or until curing membrane is applied.

E. Sidewalks, walkways, accessible routes, and ramps shall be constructed and finished in accordance with the Americans With Disabilities Act, and State and Local requirements.

F. Exposed –Aggregate Finish: Expose coarse aggregate in pavement surfaces as follows:

1. Immediately after float finishing, spray-apply chemical surface retarder to pavement according to manufacturer's written instructions.

2. Cover pavement surface with plastic sheeting, sealing laps with tape, and remove when ready to continue finishing operations.

3. Without dislodging aggregate, remove excess mortar by lightly brushing surface with a stiff, nylon-bristle broom.

4. Fine-spray surface with water and brush. Repeat water flushing and brushing cycle until cement film is removed from aggregate surfaces to depth required.

3.9 STAMPING

(NOT USED)

3.10 CURING

A. Concrete shall be kept continuously damp from time of placement until end of specified curing period or cured by other methods. Water shall not be added to surface during floating and troweling operations, and not earlier than 24 hours after concrete placement. Between finishing operations, surface shall be protected from rapid drying by a covering of waterproofing paper. Surface shall be damp when the covering is placed over it, and shall be kept damp by means of a fog spray of water, applied as often as necessary to prevent

drying, but not sooner than 24 hours after placing concrete. None of the water so applied shall be troweled or floated into surface.

B. Concrete surfaces shall be cured by completely covering with curing paper or application of a curing compound.

1. Concrete cured using waterproof paper shall be completely covered with paper with seams lapped and sealed with tape. Concrete surface shall not be allowed to become moistened between 24 and 36 hours after placing concrete. During curing period surface shall be checked frequently, and sprayed with water as often as necessary to prevent drying, but not earlier than 24 hours after placing concrete.

2. Concrete cured with a curing compound shall have the compound applied at a rate of 200 square feet per gallon, in two applications perpendicular to each other.

3. Curing period shall be seven days minimum.

C. Only if additional protection is absolutely required, the surface should remain uncovered after the seven day period for at least 4 days, after which time new and unwrinkled non-staining reinforced waterproof Kraft curing paper may be used.

3.11 EXPANSION JOINTS

A. Expansion joints shall be 1/2 inch wide and located where shown on the Drawings. Expansion joints shall be troweled in the concrete to required width with preformed joint filler in place. Joint filler shall extend the full depth of the slab and full length of the expansion joint.

1. For concrete walks, pavements, and pads, depth of joint filler shall be placed to form a 1-1/4 inch deep recess for sealant and backer rod below finished concrete surface.

2. Use of multiple pieces to make up required depth and width of joint will not be permitted.

3.12 CONSTRUCTION JOINTS

A. Construction joints shall be placed whenever placing of concrete is suspended for more than 30 minutes.

1. Butt joint with dowels or thickened edge joint shall be used if construction joints occur at control joint locations.

2. Keyed joints with tiebars shall be used if the joint occurs at any other location.

3.13 CONTROL JOINTS

A. Control joints shall be tooled into the concrete slab, with 3-inch wide border and troweled edges, in pattern as shown on the Drawings. If no pattern is shown, then pattern shall result in square shape with a maximum area of 36 square feet. Joint shall be made after concrete is finished and when the surface is stiff enough to support the weight of workmen without damage to the slab, but before slab has achieved its final set.

B. Scoring shall cut into slab surface at least 1 inch, but in no case not less than 25 percent of slab depth.

3.14 COLD WEATHER CONCRETING

A. Materials for concrete shall be heated when concrete is mixed, placed, or cured when the mean daily temperature is below 40°F or is expected to fall to below 40°F within 72 hours. The concrete, after placing, shall be protected by covering, heat, or both.

B. Details of handling and protecting of concrete during freezing weather shall be subject to the approval and direction of the Engineer. Procedures shall be in accordance with provisions of ACI 306R.

3.15 HOT WEATHER CONCRETING

A. Concrete just placed shall be protected from the direct rays of the sun and the forms and reinforcement just prior to placing shall be sprinkled with cold water. Every effort shall be made to minimize delays which will result in excessive mixing of the concrete after arrival on the site.

E. During periods of excessively hot weather (95°F., or above), ingredients in the concrete shall be cooled with cold mixing water to maintain the temperature of the concrete at permissible levels in accordance with the provisions of ACI 305. Any concrete with a temperature above 95°F., when ready for placement, will be rejected.

F. Temperature records shall be maintained throughout the period of hot weather giving air temperature, general weather conditions (calm, windy, clear, cloudy, etc.) and relative humidity. Records shall include checks on temperature of concrete as delivered and after placing in forms. Data should be correlated with the progress of the work so that conditions surrounding the construction of any part of the structure

3.16 PROTECTION OF CONCRETE SURFACES

A. Concrete surfaces shall be protected from traffic or damage until surfaces have hardened sufficiently.

END SECTION 321640

SECTION 321723 PAVEMENT MARKINGS

PART 1 – GENERAL

1.1 DESCRIPTION

A. This Section specifies requirements for removal of existing pavement markings and construction of new markings.

B. The work includes:

1. Removal of existing markings by approved methods

2. Pavement surface preparation

3. Furnishing and installing new pavement markings

1.2 RELATED DOCUMENTS

A. Sections which directly relate to the work of this Section include:

1. Section 312300 – Excavation and Fill

2. Section 312313 – Subgrade Preparation

3. Section 321216 – Asphalt Paving

4. Section 321613.43 – Stone Curbs

1.3 SITE CONDITIONS

A. The Contractor shall cordon off areas where markings are being applied, but maintain access for vehicular and pedestrian traffic as required for other construction activities. Flagmen, barricades, drums, warning signs, warning lights and similar devices shall be used as required.

1.4 SUBMITTALS

A. Submit material certificate to the Engineer, signed by the material producer and Contractor, certifying that materials comply with these specifications and have been approved for use by the Commonwealth of Massachusetts, Department of Highways.

PART 2 – PRODUCTS

2.1 MATERIALS

A. Pavement markings shall conform to Section 860 of the current Commonwealth of Massachusetts Department of Highways Standard Specifications for Highways and Bridges and Manual of Uniform Traffic Control Devices, current edition.

B. Traffic markings shall be yellow or white Traffic Marking Paint as manufactured by Sherwin Williams Paints; “set fast” Acrylic Alkyd Traffic-Marking Paint Model # TM 2160 White or TM 2161 Yellow.

PART 3 - EXECUTION

3.1 PREPARATION

A. The Contractor shall clean the pavement of dust, dirt, old pavement markings, concrete curing compounds and other foreign material which may be detrimental to the adhesion of the marking material.

3.2 PAVEMENT MARKING REMOVAL

A. Existing pavement markings that conflict with the proposed markings, and those shown on the Drawings, shall be removed. Pavement markings shall be removed before any change is made in the traffic pattern. Any excessive damage to the pavement caused by pavement marking removal shall be repaired by the Contractor by methods acceptable to the Engineer at no additional cost to the Owner.

B. Approved methods include:

1. Sand blasting using air or water.

2. High pressure water.

3. Steam or superheated water.

4. Mechanical devices such as grinders, sanders, scrapers, scarifiers and wire brushers.

C. Painting over a pavement marking line with asphaltic liquids or paints will not be permitted, unless approved by the Engineer.

D. Material deposited on the pavement from removal operations shall be removed as the work progresses. Accumulations of sand or other material which might interfere with drainage or could constitute a hazard to traffic will not be permitted.

E. Where sand blasting is used for the removal of pavement markings and the removal operation is being performed within 10 feet of a lane occupied by traffic, the residue, including dust, shall be removed immediately as the marking removal progresses by a vacuum attachment operating concurrently with the blast cleaning operation, or by other methods approved by the Engineer.

3.3 PAVEMENT MARKING APPLICATION

A. The material shall be applied to the pavement by equipment designed and manufactured specifically for the application of pavement markings.

B. The Contractor shall employ the services of a Registered Land Surveyor to provide control for layout of pavement markings.

C. Paint markings shall be applied at a minimum thickness of 15$\pm$ 1 mil. Thermoplastic markings shall be applied at 125 to 188 mils thickness.

D. Pavement markings shall be applied in accordance with the layout shown on the drawings. No paint shall be applied to new bituminous pavement until the top course has cured at least one week, and allow two weeks curing for newly installed bituminous concrete curbing.

E. All parking stalls shall be double stripe, and shall be spaced equally. The line indicated on the Drawings is on the center line of the stall marking.

F. Where entire areas are to be cross-hatched, the striping shall conform to the cross-hatching shown on the Drawings.

G. All parking stall markings shall be straight with sharp corners and clean edges. Directional arrows, cross hatching, lane divider stripes, stop lines, and lettering shall be painted white to the size, length, and spacing shown on the Drawings.

H. All markings shall be applied in one coat with brush, spray, or marking machine over dry clean pavement surfaces, when the atmospheric temperature is at or above 40°F and when the weather is otherwise favorable in the opinion of the Engineer. A second coat shall be applied after paint is thoroughly dry.

I. Use only skilled workmen who are experienced and normally employed in the work of installing pavement markings. Supply all the necessary equipment and materials required for the work.

J. The Contractor shall protect the buildings, walks, pavement, curbing, trees, shrubs, mulch and other site fixtures from over-spray of paint and damage from marking operations.

K. Traffic shall not be permitted on the pavement until the paint is thoroughly dry and Thermoplastic markings complete cured.

END SECTION 321723

INTENTIONALLY LEFT BLANK

SECTION 329200 TURFS AND GRASSES

PART 1 – GENERAL

1.1 DESCRIPTION

A. This Section specifies requirements for topsoil, seed and sod for site landscape areas.

B. The work includes:

1. Furnishing, spreading, and fine grading of topsoil and loam borrow
2. Application of lime and fertilizer
3. Seeding, sodding and mulching
4. Maintenance of seeded and sodded areas.

1.2 RELATED DOCUMENTS

A. Other specification Sections which directly relate to the work of this Section include:

1. Section 312300 – Excavation and Fill
2. Section 312500 – Erosion Control

1.3 SUBMITTALS

A. Manufacturers Product Data

1. Submit material specifications and installation instructions where applicable attesting that the following materials meet the requirements specified:

a. Fertilizer
b. Seed
c. Lime

B. Soil Test Reports

1. Prior to ordering the topsoil, submit soil test report to the Engineer for review and approval. Do not order materials until approval has been obtained. Delivered materials shall closely match the approved samples.

C. Certificates

1. A manufacturer's Certificate of Compliance to the specifications shall be submitted by the manufacturers with each shipment of each type of seed. These certificates shall include the guaranteed percentages of purity, weed content and germination of the seed, and also the net weight and date of shipment. No seed shall be sown until the Contractor has submitted the certificates.

D. Maintenance Manual

1. The Contractor shall submit a written manual, prepared for the Owner, that outlines a schedule for proper maintenance of the lawns. This schedule should include timing and methods for mowing, watering, aeration, fertilization, liming, and other lawn maintenance operations.

E. Submittal Schedule

1. Before installation:

   a. Manufacturer's Product data
   b. Soil Test Reports
   c. Seed Certification
   d. Hydroseed mix

2. After Installation and before acceptance

   a. Maintenance Manual

1.4 QUALITY ASSURANCE

A. All work shall be performed by personnel experienced in lawn installation under the full time supervision of a qualified foreman.

B. Work shall be coordinated with all other trades on site.

1.5 DELIVERY, STORAGE, AND HANDLING

A. Deliver material to the site in original unopened packages, showing weight, manufacturer's name and guaranteed analysis.

B. Store materials in a manner that their effectiveness and usability will not be diminished or destroyed. Materials shall be uniform in composition, dry, unfrozen and free flowing. Any material which has become caked or otherwise damaged or does not meet specified requirements will be rejected.

1.6 INSPECTING FOR ACCEPTANCE

A. Conditions of Acceptance

1. Acceptance shall be given for the entire portion of the lawn areas. No partial acceptance will be given.

2. Lawns shall exhibit a uniform, thick, well-developed stand of grass. Lawn areas shall have not bare spots in excess of four inches in diameter and bare spots shall comprise no more than two percent of the total area of the lawn.

3. Lawn areas shall not exhibit signs of damage from erosion, washouts, gullies, or other causes.

4. Pavement surfaces and site improvements adjacent to lawn areas shall be clean and free of spills or overspray from placing or handling of topsoil and seeding operations.

B. Inspection and Acceptance

1. Upon written request of the Contractor, the Engineer will inspect all lawn areas to determine completion of work. This request must be submitted at least five days prior to the anticipated inspection date.

2. If the lawn areas are not acceptable, the Engineer will indicate corrective measures to be taken, and shall extend the maintenance period as necessary for the completion of the work. The Contractor shall request a second inspection of the lawns after corrective measures have been accomplished. This process shall be repeated until the total area of the lawn being inspected is acceptable.

3. When the lawn areas are acceptable, a meeting of the Contractor and Owner's representative will be arranged to accept the lawn work. A final inspection will be a part of this meeting. At this meeting, the Contractor shall be furnished with a written acceptance of the lawn section being approved. The Contractor shall turn over maintenance of the lawn to the Owner at this meeting.

4. Following the acceptance of lawns, the Contractor shall provide the Owner with access to all lawn areas as required for the Owner's maintenance work.

C. Site Cleanup

1. The Contractor shall leave the site in a clean and neat condition. Final acceptance will not be granted until this condition is met.

PART 2 – PRODUCTS

2.1 TOPSOIL

A. Topsoil shall conform to the requirements specified in Section 312300 - Excavation and Fill.

B. Testing shall confirm that the topsoil, obtained from the site or loam from off-site, contains not less than 4 percent nor more than 20 percent organic matter as determined by the loss on ignition of oven-dried samples. Test samples shall be oven-dried to a constant weight at a temperature of 230 degrees F (±5) and certified test results shall be sent to the Engineer by the laboratory for approval.

2.2 SOIL CONDITIONING MATERIALS

A. Lime—Lime shall be an approved agricultural limestone containing no less than 50 percent total carbonates, and 25 percent total magnesium with a neutralizing value of at least 100 percent. The material shall be ground to such a fineness that 40 percent will pass through a No. 100 U.S. Standard Sieve, and 98 percent will pass through a No. 20 U.S. Standard Sieve. The lime shall be uniform in composition, dry and free flowing, and shall be delivered to the site in the original, unopened containers, each bearing the manufacturer's guaranteed analysis. Any lime that becomes caked or otherwise damaged (making it unsuitable for use) will be rejected.

B. Fertilizer—Fertilizer shall be a complete, standard product complying with State and Federal Fertilizer Laws. The fertilizer shall be uniform in composition, dry and free flowing, and shall be delivered to the site in the original, unopened containers, each bearing the manufacturer's guaranteed analysis, and submitted to the Engineer for approval. Fertilizer

shall contain the following minimum percentage of available plant food by weight: 10 percent nitrogen, 10 percent phosphorus, 10 percent potash, in which 75 percent of the nitrogenous elements shall be derived from organic sources or Urea-form. Exact percentages of fertilizer may vary in accordance with the soil test report. Any fertilizer that becomes caked or otherwise damaged (making it unsuitable for use) will be rejected.

C. Superphosphate—Superphosphate shall be composed of finely ground phosphate rock, as commonly used for agricultural purposes, and containing not less than 20 percent available phosphoric acid. The superphosphate shall be delivered to the site in the original, unopened containers, each bearing the manufacturer's guaranteed analysis and submitted to the Engineer for approval. Any superphosphate that becomes caked or otherwise damaged (making it unsuitable for use) will be rejected.

2.3 WATER

Water shall be furnished by the Contractor, suitable for irrigation, and free from ingredients harmful to plant life. Hoses and other watering equipment required for the work shall be furnished by the Contractor.

2.4 PLANT BACKFILL MIXTURE

A. Lawn Seed—Seed shall be fresh, clean and selected from the previous year's crop; weed seed content not to exceed 1 percent; complying with applicable Federal and State seed laws; furnished and delivered premixed in unopened containers in the following proportions:

	Percent Proportion	Percent Germination Minimum	Percent Purity Minimum
1. For Lawns:			
Creeping Red Fescue	50%	85%	95%
Kentucky Bluegrass (improved varieties)	40	85	90
Manhattan Perennial Rye	10	90	95
2. For Field Grass:			
Creeping Red Fescue	60%	85%	95%
Perennial Rye	25	90	95
Birdsfoot Trefoil	15	90	95
3. For Temporary Lawns:			
Annual Rye	60%	90%	95%
Perennial Rye	40	90	95

B. Wild Flower Seed

1. The wild flower seed shall contain: Bachelor's Button, Chicory, Lance Leaved Coreopsis, Baby's Breath, Baby Snapdragon, Scarlot Flax, Lewis Flax, Evening Primrose, Corn Poppy and Catchfly, or other varieties as approved by the Engineer.

2. Wild flower seed mix: four pounds of wild flower seed shall be thoroughly mixed with 26 pounds of Sheep Fescue (Festuca ovina) seed.

3. Submit a certificate from the supplier outlining the type and percentage of wild flower plants in the mix.

2.5 SOD

A. Composition: Nursery grown sod composed of grasses grown from the following seed mixture:

Grass Species	Proportion of Seed by Weight
Chewing Fescue	25%
Creeping Fescue	25%
American Kentucky Bluegrass	20%
Touchdown Kentucky Bluegrass	15%
Challenger Kentucky Bluegrass	15%

B. Characteristics—Sod shall be well-rooted turf, free from weeds, insect pests, and disease. It shall be machine-cut to a uniform soil thickness of 3/4-inch plus or minus, and to industry standard length and widths. Sod shall be harvested and replanted within 36 hours. Soil on sod pads shall be kept moist at all times.

2.6 MULCH

A. Wood Cellulose Fiber Mulch

1. Mulch to cover hydroseeded areas shall be fiber-processed from whole wood chips manufactured specifically for standard hydraulic mulching equipment. Fiber shall not be produced from recycled material such as sawdust, paper, or cardboard.

2. Moisture content shall not exceed 10 percent, plus or minus 3 percent, as defined by the pulp and paper industry standards. Fiber shall have a waterholding capacity of not less than 900 grams of water per 100 grams fiber.

3. The mulch shall disperse into a uniform slurry when mixed with water. It shall be nontoxic to plant life or animal life.

4. The mulch shall contain a non-petroleum based tackifier and a green dye for visual monitoring during application, but noninjurious to plant growth.

2.7 EROSION CONTROL MATTING FOR SLOPED AREAS

A. Matting for erosion control shall be provided on all slopes of 1 foot rise to 2 feet and steeper and shall consist of undyed and unbleached smolder resistant jute yarn woven into a uniform, open, plain weave mesh. Jute matting shall be furnished in rolled strips and shall conform to the following:

Width: 48 inches, plus or minus one inch

78 warp ends per width of cloth
41 weft ends per yard

Weight: To average between 1.22 pound and 1.80 pounds per linear yard.
Tolerance: plus or minus 5%

B. Stakes for pegging erosion control matting shall be sound hardwood approximately 1 inch by 3 inches. Stakes shall be free from insects and fungi and capable of remaining intact in the ground for at least two years.

2.8 HYDROSEED MIX

The Contractor shall submit a certified statement as to number of pounds of fertilizer, amounts and types of grass seed, and processed fiber, per 100 gallons of water.

PART 3 - EXECUTION

3.1 SEED AND SOD BED PREPARATION

A. Grade all lawn areas to finish grades as indicated on the Drawings. When no grades are shown, areas shall have a smooth and continual grade between existing or fixed controls and elevations shown on Drawings. Roll, scarify, and rake, as required, to obtain uniform, even lawn surfaces. All lawn areas shall slope to drain. Finish grades shall be approved by the Engineer.

B. If no new topsoil is required, thoroughly loosen soil in areas to be seeded or sodded to a minimum depth of 6 inches with approved power or hand equipment. Remove rocks, debris, clods and other undesirable substances, and maintain grading and drainage patterns.

C. When topsoil is required, place topsoil on previously scarified subsoil to a minimum depth of 6 inches. Subsoil shall be cleaned of debris and stones larger than 2 inches prior to topsoil spreading.

D. Apply fertilizer, superphosphate, and lime, at rates recommended by the testing agency and approved by the Engineer. Thoroughly and evenly incorporate fertilizer and lime into the soil to a depth of 3 inches, by discing or other approved methods. In areas inaccessible to power equipment, fertilizer and lime shall be incorporated into the soil by manual methods. At existing trees, the depth shall be adjusted to avoid disturbance of the roots.

E. Seeding and sodding shall be done immediately after final grading, provided the bed has remained in a good, friable condition, and has not become muddy or compacted. Any undulations or irregularities in the surface resulting from fertilizing, liming, tilling, or other causes, shall be regraded prior to seeding and sodding. The surface shall be free of stones, cleared of all trash, debris, roots, brush, wire, grade stakes and other objects that would interfere with establishment of grass and grass maintenance operations.

3.2 HYDROSEED BED PREPARATION

A. Prepare seed bed for hydroseeding the same as for seeding and sodding, but do not incorporate fertilizer into the top 3 inches of topsoil.

B. Hydroseeding shall be applied with a spray machine designed for this purpose and approved by the Engineer.

3.3 SEEDING

A. Seeding shall be done between April 1 to June 1, or August 15 to October 15, except as otherwise authorized in writing by the Engineer.

B. All disturbed areas not covered by buildings, paving, or otherwise developed, shall be seeded.

C. Seeding shall not be done during windy or inclement weather.

3.4 MANUAL SEEDING

A. Sow lawn seed uniformly with an approved mechanical seeder at the rate of five pounds per 1,000 square feet. Culti-packer or approved similar equipment may be used to cover the seed and to form the seed bed in one operation. In areas inaccessible to the Culti-packer, the seeded ground shall be lightly raked with flexible rakes and rolled with a water ballast roller. Seeding shall be done in two directions at right angles to each other.

B. In areas having slopes 3:1 or steeper, and in drainage swales, the Contractor shall carry out a separate overseeding operation immediately after sowing the specified seed mix. The overseeding shall be sown at the rate of 3 pounds per 1,000 square feet. Seeded areas requiring additional erosion control, shall be covered with an approved, biodegradable erosion control fabric and the fabric firmly anchored.

C. The wild flower seed mix shall be applied uniformly over the designated area at a rate of 30 pounds per acre. The seed shall be lightly raked to ensure proper soil-seed contact and kept damp until the plants have become established.

3.5 HYDROSEEDING

A. Designated areas shall be hydroseeded only after written approval of the finished grading by the Engineer.

B. Fertilizer shall be added to the hydroseeding slurry at the rate of five pounds per 1,000 square feet.

C. Seed shall be added to the hydroseeding slurry at the rate of seventy-five pounds per acre.

D. Wood cellulose fiber mulch shall be added to the hydroseeding slurry at the rate of two tons per acre.

E. A mobile tank with a capacity of at least 500 gallons shall be filled with water, and the required amounts of seed, wood cellulose mulch and fertilizer. The slurry shall be thoroughly mixed by means of positive agitation in the tank. The slurry shall be applied by means of a centrifugal pump using the turret or hose application technique from the mobile tank. The hose or turret shall be equipped with a seeding nozzle of a proper design to ensure even distribution of the solution over the area to be seeded and shall be operated by a person thoroughly familiar with this type of seeding operation.

3.6 SODDING

A. Before sod is laid, and after all grading is complete, the loam bed shall be lightly raked with a fine toothed harrow or hand rake. The loam bed shall be moist, but not wet, prior to laying the sod. Sod shall not be laid on soil that is dry and powdery.

B. The first row of sod shall be laid in a straight line with subsequent rows placed parallel to, and tightly against, each other. Lateral joints shall be staggered to promote more uniform growth and strength. Care shall be exercised to ensure that the sod is not stretched or overlapped, and that all joints are butted tight to prevent voids. The Contractor shall rake sufficient screened loam into the sod to fill all small voids. All large voids shall be filled with sod plugs.

C. Sod shall be laid with staggered joints and secured by pegging on slopes greater than 25%.

D. Sod shall be placed from April 1 to June 1 and August 15 to October 15, provided that the ground is not frozen.

E. Sod shall be harvested, delivered, and transplanted onto the site within a period of 36 hours.

F. Sod shall be watered immediately, during and after installation, to a sufficient depth to thoroughly wet the underside of the new sod and the soil immediately below. The Contractor shall have adequate water available on the site prior to, and during, installation of the sod.

3.7 MAINTENANCE AND PROTECTION

A. Maintenance of seeded and sodded areas shall begin immediately after installation. Maintenance includes watering, weeding, mowing and edging, reseeding, replacement of dead sod, disease and insect pest control, repair of all erosion damage, and any other procedures consistent with good horticultural practice, required to ensure normal, vigorous, and healthy growth. Maintenance shall continue until final acceptance of the work.

B. Maintenance shall also include all temporary protection fences, barriers, signs, and all other work incidental to proper maintenance.

C. Scattered bare spots will be allowed up to a maximum of 2 percent of any lawn area, provided none are larger than 72 square inches. After the grass has sprouted, all bare areas shall be re-seeded or re-sodded repeatedly until all areas are covered with a satisfactory growth of grass. At the time of the first cutting, lawn should be mowed not less than 2-1/2 inches high. Sod shall be maintained between 1-3/4 and 2-1/2 inches high. Do not remove more than one-third of the grass blade. All lawns shall receive at least three mowings before acceptance.

D. The seeded and sodded areas shall be maintained in a continuous moist condition, satisfactory for good germination and growth of grass until acceptance.

E. Six weeks after the seeded areas have become established, fertilizer shall be applied over the entire area. Sod shall be fertilized at the time of the second mowing.

END SECTION 329200

SECTION 329600 TRANSPLANTING

PART 1 – GENERAL

1.1 DESCRIPTION

A. This Section specifies requirements for transplanting trees and shrubs

B. The work includes:

1. transplanting of existing trees or shrubs on-site.

2. staking, fertilizing, backfill soil mix.

3. maintenance and clean-up.

1.2 RELATED DOCUMENTS

A. Other specification Sections which directly relate to the work of this Section include:

1. Section 312300 – Excavation and Fill

2. Section 312500 – Erosion Control

3. Section 329200 – Turfs and Grasses

1.3 SUBMITTALS

A. Manufacturers Product Data

1. Submit material manufacturer's literature and installation instructions where applicable attesting that the following materials meet the requirements specified:

a. Fertilizer
b. Anti-desiccant
c. Tree paint

B. Soil Test Reports

1. Prior to ordering the topsoil, submit soil test report to the Engineer for review and approval. Do not order materials until the Engineer's approval has been obtained. Delivered materials shall closely match the approved samples.

a. Topsoil: The Contractor shall employ a certified testing laboratory to test the material and submit test reports directly to the Engineer. Reports shall include:

(2) Tests for Phosphorus, Potassium, Calcium, Soluble Salts and show acidity of the soil, and soil pH. Submittal at least one month before any topsoil spreading is to be done.

(3) Location of sample/source.

C. Maintenance Manual

1. The landscape Contractor shall submit a written manual, prepared for by the Owner, that outlines a schedule for proper maintenance of the transplanted trees and shrubs. This schedule should include timing and methods for watering, fertilization, mulching, pruning and other maintenance operations.

D. Submittal Schedule

1. Before installation:

   a. Manufacturer's Product Data
   b. Soil Test Reports.

2. After Installation and before acceptance

   a. Maintenance Manual.

1.4 QUALITY ASSURANCE

A. All transplanting operations shall be performed by experienced personnel under competent supervision. Education, experience and certification or license by appropriate organization may be reviewed to evaluate competence.

1.5 TESTING

A. All topsoil obtained from on-site and off-site used for work of shall be tested prior to being spread or mixed. All testing shall be done by approved independent test laboratory or by the agriculture unit of State University System. Contractor shall provide required representative samples of material for testing facility.

B. Test analysis shall include:

- Classification of soil
- Percent sand, silt and clay particles
- Percent organic content
- Percent soluble salt index

C. Test reports shall include specific recommendations as to the exact types, times and rates of application of soil additives and fertilizers based upon the soil test results and type of material to be planted.

D. Specified soil additive and fertilizer types and requirements, are approximate and that all soil additives shall be adjusted to comply with test reports.

1.6 INSPECTION FOR ACCEPTANCE

A. After the minimum thirty (30) day maintenance period, the Contractor shall request the Engineer, in writing, for an inspection to determine whether the plant material is acceptable. If the plant material and workmanship are acceptable, written acceptance will be given by the Engineer.

PART 2 – PRODUCTS

2.1 EXISTING TREES TO BE TRANSPLANTED

A. The existing trees and shrubs designated (TBRR) on the Drawings, and listed in the planting schedule shall be transplanted to the new locations shown on the Drawings. The plants shall be moved only in the planting season specified in Article 3.2.

2.2 SOIL CONDITIONING MATERIALS

A. Apply conditioning materials in accordance with recommendations of testing laboratory.

B. Commercial Fertilizer shall conform to State and Federal fertilizer laws. It shall be uniform in composition, dry and free flowing and shall be delivered to the site in the original, unopened containers, each bearing the manufacturer's guaranteed analysis. Any fertilizer which becomes caked or otherwise damaged, making it unsuitable for use, will not be accepted. At least 50 percent by weight of the nitrogen contents of the fertilizer shall be derived from organic sources. A minimum of 35% of the nitrogen shall be water insoluble. Fertilizer shall contain not less than percentage of weight of ingredients as follows or as recommended by soil analysis:

For deciduous (dry)	10%	6%	4%
Trees and shrubs (water soluble)	6%	19%	16%
For evergreen (dry)	7%	7%	7%
Trees and shrubs (water soluble)	21%	7%	7%

C. Humus shall be natural humus, reed peat or sedge peat. It shall be free from excessive amounts of zinc, low in wood content, free from hard lumps and in a shredded or granular form and shall pass through a 1/2 inch mesh screen. According to the methods of testing of A.O.A.C., latest edition, the acidity range shall be approximately 5.5 pH to 7.6 pH and the organic content shall be not less than 60% as determined by drying at 105 degrees C. The minimum water absorbing ability shall be 200% by weight on an oven-dry basis.

D. Peat moss shall be composed of the partly decomposed stems and leaves of any or several species of sphagnum moss. It shall be free from wood, decomposed colloidal residue and other foreign matter. It shall have an acidity range of 3.5 pH to 5.5 pH as determined in accordance with the methods of testing of A.O.A.C., latest edition. Its water absorbing ability shall be a minimum of 1,100% by weight on an oven-dry basis.

E. Manure shall be well-rotted, unleached stable manure not less than eight months and not more than two years old. It shall be free from sawdust, shavings, or refuse of any kind and shall not contain over 25% straw. The Contractor shall furnish information as to kind of disinfectant or chemicals, if any, that may have been used in storage of the manure.

F. Bone meal shall be fine ground, steam-cooked, packing house bone with a minimum analysis of 23% phosphoric acid and 1.0% of nitrogen.

G. Leaf mold shall be a highly organic dark brown to black spongy residue resulting from the well aerated composting of deciduous tree parts, free of plants and their roots, debris and other extraneous matter and shall be uncontaminated by foreign matter and substances harmful to plant growth. The organic matter shall not be less than 85% by weight as determined by the loss on ignition of oven-dried samples. Test samples shall be oven-dried to a constant weight at a temperature of 16 degrees C. The inorganic residue after ignition shall not be finer textured than 4% by weight passing the number 200 sieve with washing.

H. Mulch—Native shredded pine bark, 100 percent organic, having a moisture content not to exceed 40 percent, be free of any disease, insects. the particles shall pass a 1-inch square mesh and be retained on a 1/8-inch square mesh.

2.3 PLANT BACKFILL MIXTURE

A. Plant backfill mixture shall consist of 75 percent in-situ topsoil and 25 percent peat moss or leaf mold by volume, thoroughly mixed together. In addition to this, mix in fertilizer, cow manure, and other additives as required by recommendations of the testing laboratory reports.

B. The plant backfill mixture shall have an acidity range of between 5.5 pH and 7.6 pH.

2.4 WATER

A. Water shall be furnished by the Contractor and will be suitable for irrigation and free from ingredients harmful to plant life. Hose and other watering equipment required for the work shall be furnished by the Contractor.

2.5 SUPPORT MATERIALS

A. Wire for staking and guying shall be pliable annealed galvanized twisted steel wire, galvanized eyebolts and galvanized turn buckles of sufficient strength to withstand wind pressure.

B. Two-ply reinforced rubber garden hose not less than 1/2-inch in diameter, black in color.

C. Stakes shall be hardwood stakes, unpainted and pointed at one end. Size and length as required for staking and guying.

D. Material for supporting trees shall be in accordance with the following schedule:

Tree Size	Staking Material	Wire	Turn-buckle or Flag
2-to 3-1/2 inch caliper (deciduous)	2-inch by 2-inch cedar stake (three stakes required)	1/8-inch diameter single stranded wire	3-1/2 inches
3-1/2 to 6-inch caliper (deciduous)	6-inch ground anchor or deadman 6-inch diameter by 2-feet (three guys required)	3/16-inch diameter triple stranded cable	5/16 inches by 4 1/2 - inches Galv. with flag
6-to 8-inch caliper (deciduous)	6-inch ground anchor or deadmen 6-by 3-foot (three required)	3/16-inch diameter cable	5/16-inches by 4-1/2-inches. Galv. with flag
8-to 10-inch caliper (deciduous)	8-inch ground anchor or deadmen 8-inches by 3-feet (four required)	1/4-inch diameter cable	3/8-inches by 6-inches Galv. with flag

Tree Size	Staking Material	Wire	Turn-buckle or Flag
10-to 12-inch caliper (deciduous)	10-inch ground anchor or deadmen 10-inches by 3-feet (four required)	5/16-inch diameter cable	1/2-inch by 8 inches. Galv. with flag
5-to 7-foot height (evergreen)	2-inch by 3-inch by 3-foot wood stake, staining optional (three guys required)	1/8-inch diameter single stranded wire	3-1/2 inches with flag
7-to 12-foot height (evergreen)	2-inch by 4-inch by 3-foot wood stake, staining optional, or 4-inch ground anchor (three guys required)	3/16-inch diameter triple stranded cable	8 inches with flag
12-to 16-foot height (evergreen)	6-inch ground anchor or deadmen 6-inches by 3-feet (three required)	3/16-inch diameter cable	5/16-inch by 4-1/2-inch Galv. with flag
16-to 20-foot height (evergreen)	8-inch ground anchor or deadmen 8-inches by 3-feet (four required)	1/4-inch diameter cable	3/8-inch by 6-inches Galv. With flag
20-to 25-foot Height (evergreen)	10-inch ground anchor or deadmen 10-inches by 3-feet (four required)	5/16-inch diameter cable	1/2-inch by 8-inches Galv. With flag

2.6 TREE PAINT

A. Non-toxic, waterproof, adhesive, and elastic tree paint product manufactured for the purpose.

2.7 ANIT-DESSICANT

A. Anti-desiccant emulsion that will provide a protective film over plant surfaces, permeable enough to permit transpiration, delivered in containers with manufacturer's directions. Anti-desiccant shall be Wiltpruf, manufactured by Nursery Specialty Products, Inc., or approved equivalent. Apply according to manufacturer's recommendations.

PART 3 - EXECUTION

3.1 TRANSPLANTING DATES

A. Transplant within the following dates:

1. Evergreen trees and shrubs:
   Spring: April 1 - June 1
   Fall: September 1 - November 1

2. Deciduous trees and shrubs:
   Spring: April 1 - June 1
   Fall: October 1 - November 15

3. Planting shall be prohibited in frozen or muddy ground.

B. Special conditions may warrant a variance in the above dates. Contractor shall notify the Construction Manager of the conditions and the proposed variance. Permission will be given if the variance is warranted.

C. Approximate planting dates schedule shall be furnished by Contractor to the Construction Manager for approval. Material planted out-of-season shall be given extra care and attention by the Contractor.

3.2 ROOT PRUNING

A. Trees over 5 inches in caliper to be transplanted shall be root pruned at least one growing season prior to transplanting.

B. Size of root ball shall be 12 inches diameter for every 1 inch diameter of caliper size. Mechanical tree spades may be used for root pruning trees up to 6.5 inches caliper, provided that above trunk caliper to ball diameter ratio is maintained.

C. Root pruning shall consist of the complete severance of two thirds of bottom and side roots. No plant will be accepted if it has not completely recovered from the shock of its last root pruning. (Recovery may take one or more growing seasons.)

3.3 TRANSPLANTING

A. All plants shall be moved with the root systems as solid units with balls of earth firmly wrapped with burlap. The diameter and depth of balls of earth shall comply with the American Association of Nurserymen Publication American Standard for Nursery Stock, Section 1.2.2 - "Collected-Spread of Roots." The balling of trees shall be accomplished by manual methods, or by mechanical tree spade.

B. Root balls shall be treated in the following manner:

1. No tap root shall be present.

2. The majority of lateral roots extending beyond the dimensions of the ball shall be fibrous and pliable enough to allow combing out and saving. The roots must be pliable enough to bend around the ball of the plant without breakage or rupture.

3. A lateral root over 3/4 inches in diameter at its protrusion beyond the dimension of the ball shall not be considered pliable enough to save. These shall be cleanly pruned using sharp pruners or saws.

4. The length of the majority of lateral roots protruding beyond the ball shall not be greater than will allow the smallest fibrous rootlets at their tips to be saved. Lateral roots which extend beyond the ball more than approximately one half the diameter of the ball, shall not be considered practical to save.

C. Carefully lift the tree, and supported root ball, out of the ground. If possible, immediately move tree to its permanent location and replant.

D. If tree is in leaf, spray the foliage with anti-desiccant to protect it from excessive moisture loss.

E. Contractor shall take care that adequate clearance exists for safe passage by utility lines, overpasses or existing vegetation.

F. Plants that cannot be immediately planted at their permanent location shall be placed in a shaded location, and their root balls covered with soil. The balls shall be thoroughly watered when stored and kept moist until the time of permanent planting.

3.4 EXCAVATION OF TREE PITS AND SHRUB BEDS

A. Stake out on the ground locations for trees and outlines of all beds. Obtain approval of the Engineer before excavation.

B. If rock, utilities, tree roots or obstructions are encountered in the excavation of shrub beds and tree pits, alternate locations may be selected by the Engineer.

C. Test drainage of plant beds and pits by filling with water twice in succession. Conditions permitting the retention of water for more than 24 hours shall be brought to attention of the Engineer.

D. Notify the Engineer in writing of all soil or drainage conditions which the Contractor considers detrimental to growth of plant material.

E. Excavate tree pits and shrub beds to depths required

3.5 PLANTING

A. Place plants in the center of the holes. Use planting mix to backfill plant pits. Place planting mix in layers not to exceed 8 inches.

B. Set the trunk flare of the plant slightly above finish grade in the same relationship it was to the ground from which it was dug. Set plant plumb and brace in position until the planting mix has been lightly tamped around the root ball. When plant pits have been backfilled approximately two-thirds full, water thoroughly before installing remainder of the planting soil to eliminate air pockets. Cut ropes or wires from top two-thirds of ball after plant has been set. Cut away and remove all visible burlap wrapping from around root balls. Loosen surface soil of root ball and comb out any exposed roots. Remove synthetic wrap completely.

C. Form 3 inch deep saucers around tree pits and shrub beds.

D. Mulch all pits and beds immediately after planting and first watering.

E. Water all plants immediately after planting. All plants shall be flooded with water twice within first 24 hours of planting.

3.6 TREE SUPPORT

A. Firmly stake or guy all trees immediately after planting. Plants shall stand plumb after staking or guying. Stakes shall be plumb and neat, and installed in accordance with the details shown on the Drawings.

3.7 PRUNING

A. Each transplanted tree and shrub shall be pruned in accordance with American Nurserymen Association standards to preserve the natural character of the plant.

B. Pruning shall include the following:

1. Remove all dead wood, suckers and broken or badly bruised branches. Never cut a leader.

2. Use only clean, sharp tools.

3. Paint cuts over 3/4-inch diameter, covering all exposed, living tissue.

C. Apply anti-desiccant to foliage if conditions warrant.

3.8 CLEAN-UP

A. Soil or other material deposited on paved areas shall be promptly removed. Keep paved areas clean at all times.

B. Upon completion of planting, all excess stones, debris and soil shall be cleaned up and removed from the site.

C. Broom and hose clean all pavements.

3.9 MAINTENANCE AND PROTECTION OF TRANSPLANTINGS

A. Maintenance shall begin immediately after each plant is transplanted and shall continue until acceptance.

B. Maintenance shall include:

1. Pruning, watering, cultivating, weeding, mulching, tightening and repairing of stakes or guys, resetting plants to proper grades or upright position, restoration of the planting saucer and furnishing and applying sprays required to keep the planting free of insects and disease.

2. Protect planting areas and plants against trespassing and damage of all kinds for the duration of the maintenance period. If any plants become damaged or injured, they shall be treated or replaced as required.

3. All plantings shall be thoroughly saturated at least twice per week during maintenance period.

END SECTION 329600

SECTION 330526.23 UTILITY IDENTIFICATION TRACE WIRES

PART 1 – GENERAL

1.1 DESCRIPTION

A. This Section covers the furnishing, handling and installation of tracer tape, as called for on the drawings.

1.2 SUBMITTALS

A. Six sets of manufacturer's literature on the materials, colors and printing specified herein, shall be submitted to the Engineer for review.

B. Tape samples shall also be submitted to the Engineer for review.

PART 2 – PRODUCTS

2.1 ACCEPTABLE MANUFACTURERS

A. Tape shall be manufactured by: Terra-Tape and Terra-Tape D by Reef Industries, Houston, TX; an equivalent tape by Industrial Tape and Supply Company, Marietta, GA; or approved equal.

2.2 TAPE

A. Warning and tracer tape shall be at least 6 inches wide.

B. Tracer tape for non-ferrous pipe or conduit shall be constructed of a metallic core bonded to plastic layers. The metallic tracer tape shall be a minimum 5-mil thick and shall be located at a depth as indicated on the drawings.

C. Warning tape for ferrous pipe or conduit shall consist of multiple bonded plastic layers. The non-metallic tracer tape shall elongate at least 500% before breaking.

D. The tape shall bear the wording: "(or approved equivalent): BURIED DRAIN LINE BELOW" (with "DRAIN" replaced by "WATER", "SEWER", "ELECTRICAL", "GAS", "TELEPHONE", or "CHEMICAL" as appropriate), continuously repeated every 30 inches to identify the pipe.

E. Tape colors shall be as follows as recommended by the American Public Works Association (APWA):

Electric	Red
Gas and Oil	Yellow
Communications	Orange
Water	Blue
Sewer and Drain	Green
Chemical	Red (not APWA)

PART 3 EXECUTION

3.1 INSTALLATION

A. Tracer tape shall be installed above the pipe or conduit it is to identify at depths as indicated on the Drawings.

B. Follow the manufacturer's recommendations for installation.

END SECTION 330526.23

SECTION 334100 STORM UTILITY DRAINAGE PIPING

PART 1 – GENERAL

1.1 DESCRIPTION

A. This Section specifies requirements for furnishing and installing the site storm utility drainage piping system.

B. The work includes:

1. Site storm drainage system.

2. Site underdrains, headwalls, and underground stormwater facilities.

1.2 RELATED DOCUMENTS

A. Other specification Sections which directly relate to the work of this Section include:

1. Section 312300 – Excavation and Backfill

2. Section 312319 – Dewatering

3. Section 312500 – Erosion Control

4. Section 321640 – Site Cast-in-Place Concrete

5. Section 334900 – Storm Utility Drainage Structures

1.3 SUBMITTALS

A. Shop drawings

1. Materials list of items proposed for the work.

2. Shop drawings or descriptive literature, or both, showing dimensions, joint and other details of all materials proposed for the work. Shop drawings shall be submitted to the Engineer for approval prior to ordering material.

B. As-Built Drawings

1. Submit 4 copies of As-Built Drawings upon completion and acceptance of work.

2. As-Built Drawings shall be complete and shall indicate the true measurement and location, horizontal and vertical, of all new drainage system construction. As-Built drawings shall include a minimum of three ties showing the distance to each catch basin and manhole from fixed permanent objects. As-Built drawings shall also contain any additional information required by the municipality, and shall be stamped with the seal of a Licensed Land Surveyor and Licensed Professional Engineer.

1.4 COORDINATION AND VERIFICATION

A. Coordinate the work with the termination of storm drain connections at buildings, connections to municipal systems, and trenching operations.

B. The contractor shall field verify and survey the size, location and elevations of all existing pipe and utility lines prior to ordering of materials for this utility system. A report of the findings of the verification survey shall be submitted to the engineer for information and comment.

1.5 DELIVERY, STORAGE AND HANDLING

A. All materials shall be adequately protected from damage during transit. Pipes shall not be dropped.

B. All pipe and other appurtenances shall be inspected before placement in the work and any found to be defective from any cause, including damage caused by handling, and determined by the Engineer to be unrepairable, shall be replaced at no cost to the Owner.

C. Storage and handling of pipes and other system appurtenances shall be in accordance with the manufacturer's recommendations.

1.6 INSPECTION

A. The manufacturer/supplier is responsible for the provision of all test requirements specified for each type of pipe. In addition, any pipe may be inspected at the plant for compliance with these specifications by an independent testing laboratory selected and paid by the Owner. The Contractor shall require the manufacturer's cooperation in these inspections.

B. Inspection of the pipe may also be made after delivery. The pipe shall be subject to rejection at any time on account of failure to meet any of the specification requirements, even though pipe samples may have been accepted as satisfactory at the place of manufacture. Pipe rejected after delivery shall be marked for identification and shall be removed from the site at once.

PART 2 – PRODUCTS

2.1 GENERAL

A. All materials for storm drainage system shall be new and unused.

2.2 PIPE

A. Reinforced Concrete Pipe: Pipe shall comply with the requirements of ASTM C76. All pipe 18 inches and smaller shall be Class V. All other pipe shall be Class III unless indicated otherwise on the Drawings.

Joints for the reinforced concrete pipe shall be the tongue and groove or bell and spigot type with rubber gasket conforming to ASTM C443.

Flared end pipe sections shall be constructed in conformance with ASTM C76, Class V requirements and shall be supplied by the same manufacturer as the pipe.

B. Reinforced Concrete Box Sections: Box sections shall comply with the requirements of ASTM C 850 and ASTM C 1433.

C. Corrugated Aluminized Steel Pipe: (NOT USED)

D. Perforated Steel Pipe Underdrain: (NOT USED)

E. Slotted Corrugated Plastic Pipe for Subdrain: (NOT USED)

F. Filter Fabric for Underdrains shall be Mirafi 140N or approved equivalent

G. Filter Fabric for Flared End Sections and Headwalls with Stone Protection shall be Mirafi 140N, or approved equivalent.

H. High Density Corrugated Polyethylene Pipe and Fittings: (NOT USED)

I. Polyvinyl Chloride (PVC) Pipe: (NOT USED)

J. Ductile Iron Pipe: (NOT USED)

2.3 TRENCH DRAINS

(NOT USED)

2.4 INFILTRATION SYSTEMS CONSTRUCTION

(NOT USED)

PART 3 EXECUTION

3.1 GENERAL

A. Contractor to verify the location, size invert and type of existing pipes at all points of connection prior to ordering new utility materials.

B. All pipe shall be laid accurately to the lines and grades shown on the drawings nd in conformance with the pipe manufacturer's recommendations.

C. As soon as the trench is excavated to the normal grade of the bottom of the trench, the Contractor shall immediately place the bedding material in the trench. The pipe shall be firmly bedded in the compacted bedding material accurately to the lines and grades shown on the Drawings.

D. Laying Pipe: Each length of pipe shall be laid with firm, full and even bearing throughout its entire length, in a prepared trench. Pipe shall be laid with bells upgrade unless otherwise approved by the Engineer.

Every length of pipe shall be inspected and cleaned of all dirt and debris before being laid. The interior of the pipe and the jointing seal shall be free from sand, dirt and trash. Extreme care shall be taken to keep the bells of the pipe free from dirt and rocks so that joints may be properly lubricated and assembled. No pipe shall be trimmed or chipped to fit.

No length of pipe shall be laid until the proceeding lengths of pipe have been thoroughly embedded in place, to prevent movement or disturbance of the pipe alignment.

E. Notch under pipe bells and joints where required to provide for uniform bearing under entire length of pipe.

F. Excavation, backfilling and compaction shall be as specified in Section 312300 – Excavation and Backfill.

G. Maintain optimum moisture content of bedding material to attain required compaction density.

H. Pipe Extension: Where an existing pipe is to be extended, the same type of pipe shall be used, unless otherwise approved by the Engineer.

I. Full Lengths of Pipe: Only full lengths of pipe shall be used in the installation except that partial lengths of pipe may be used at the entrance to structures, and to accommodate the required locations of service connection fittings.

J. Pipe Entrances to Structures: All pipe entering structures shall be cut flush with the inside face of the structure, and the cut ends of the pipe surface within the structure shall be properly rounded and finished so that there will be no protrusion, ragged edges or imperfections that will impede or affect the hydraulic characteristics of the stormwater flow. The method of cutting and finishing shall be subject to the approval of the Engineer.

K. Protection During Construction: The Contractor shall protect the installation at all times during construction, and movement of construction equipment, vehicles and loads over and adjacent to any pipe shall be performed at the Contractor's risk.

At all times when pipe laying is not in progress, all open ends of pipes shall be closed by approved temporary watertight plugs. If water is in the trench when work is resumed, the plug shall not be removed until the trench has been dewatered and all danger of water entering the pipe eliminated.

L. Water Pipe – Drain Pipe Separation: When a drain pipe crosses above or below a water pipe, the following procedures shall be utilized:

1. Relation to Water Mains

a) *Horizontal Separation*: Whenever possible drains shall be laid at a minimum at least 5 feet, horizontally, from any existing or proposed water main. Should local conditions prevent a lateral separation of 5 feet, a drain may be laid closer than 5 feet to a water main if:

i. It is laid in a separate trench, or if;

ii. It is laid in the same trench with the water mains located at one side on a bench of undistributed earth, and if;

iii. In either case the elevation of the top (crown) of the drain is at least 12 inches below the bottom (invert) of the water main.

b) *Vertical Separation*: Whenever drains must cross under water mains, the drain shall be laid at such an elevation that the top of the pipe is at least 12 inches below the bottom of the water main. When the elevation of the drain cannot be varied to meet the above requirements, the water main shall be relocated to provide this separation or reconstructed with mechanical-joint pipe for a distance of 10 feet on each side of the drain. One full length of water main should be centered over the drain so that both joints will be as far from the sewer as possible.

When it is impossible to obtain horizontal and/or vertical separation as stipulated above, both the water main and drain shall be constructed of mechanical-joint cement lined ductile iron pipe or

other equivalent based on water tightness and structural soundness. Both pipes shall be pressure tested by an approved method to assure water tightness.

3.2 EXCAVATION AND BACKFILLING FOR PIPES

The type of materials to be used in bedding and backfilling and the method of placement shall conform to the requirements of Section 312300 – Excavation and Backfill, Earthwork, the details shown on the Drawings and the following.

A. Embedment materials are those used for bedding, haunching and initial backfill around pipes as illustrated on the drawings.

All embedment materials should be free from lumps of frozen soil or ice when placed. Embedment materials should be placed and compacted at optimum moisture content

B. Trench Bedding: Material must be provided to insure proper line and grade is maintained. Unsuitable or unstable materials shall be undercut and replaced with a suitable bedding material, placed in 6" lifts. Other methods of stabilization, such as geotextiles may be appropriate and their use must be approved by Owner's Representative.

Provide a stable and uniform bedding for the pipe and any protruding features of its joints and/or fittings. The middle of the bedding equal to 1/3 of the pipe outside diameter should be loosely placed, with the remainder compacted to a minimum of 95 percent standard proctor density.

C. Haunching: Proper haunching provides a major portion of the pipe's strength and stability. Exercise care to insure placement and compaction of the embedment material in the haunches. For larger diameter pipes (>30"), embedment materials should be worked under the haunches by hand. Haunching materials shall be placed and compacted in 6 inch maximum lifts, compacted to 95 percent modified proctor density.

D. Initial Backfill: The initial backfill shall be from the springline to 24 inches above the pipe to provide protection for the pipe from construction operations during placement of the final backfill and protect the pipe from stones or cobbles in the final backfill. Compact initial backfill per Section 312300 – Excavation and Backfill.

Flooding or jetting as a procedure for compaction are not allowed.

E. Final Backfill: The final backfill should be the same material as the proposed embankment or surface finishes. Generally, the excavated material may be used as final backfill. Placement should be as specified for the embankment. In lieu of a specification, the final backfill should be placed in 12 inch maximum lifts and compacted to a minimum 95 percent modified proctor density to prevent excessive settlement at the surface. Compaction should be performed at optimum moisture content.

F. Vehicular and Construction Loads: During construction, avoid heavy equipment loads (> 40,000 lbs. per axle over the pipe. Additional temporary cover should be placed over the pipe for heavy construction load crossings. Hydrohammers or hoe-pak compactors may not be used over the pipe until at least 48 inches of cover have been provided.

3.3 CONNECTIONS TO EXISTING FACILITIES

A. General Requirements: The contractor shall make all required connections of the proposed drainage system into existing drainage system, where and as shown on the Drawings.

B. Compliance with Requirements of Owner of Facility: Connections into existing drainage system facilities shall be performed in accordance with the requirements of the Owner of the facility. The Contractor shall comply with all such requirements, including securing of all required permits, and paying the costs thereof.

3.4 ROOF DRAIN OR SIMILAR CONNECTIONS

(NOT USED)

3.5 TRENCH DRAINS AND SLOTTED DRAINS

(NOT USED)

3.6 INFILTRATION SYSTEM

(NOT USED)

3.7 MANHOLE CONNECTIONS

A. Manhole pipe connections for precast manhole bases may be accomplished by any method described below. The Contractor shall make sure that the outside diameter of the pipe is compatible with the particular pipe connection used.

1. A tapered hole filled with non-shrink waterproof grout after the pipe is inserted. This connection method will not be allowed when connecting PVC pipe to manholes.

2. The LOCK JOINT Flexible Manhole Sleeve cast in the wall of the manhole base. The stainless steel strap and exposed sleeve shall be protected from corrosion with a bitumastic coating.

3. PRESS WEDGE II gasket cast into the wall on the manhole base. The rubber wedge shall only be driven into the V slot from the outside of the manhole.

4. RES-SEAL, a cast iron compression ring which compresses a rubber "O" ring gasket into a tapered hole in the wall of the manhole base. Exposed metal shall be protected from corrosion with a bitumastic coating.

5. KOR-N-SEAL neoprene boot cast into the manhole wall. The stainless steel clamp shall be protected from corrosion with a bitumastic coating.

END SECTION 334100

SECTION 334726 STORM DRAINAGE PONDS AND RESERVOIRS

PART 1 – GENERAL

1.1 DESCRIPTION

A. This section specifies requirements for drainage facilities as shown on the drawings and details. The drainage facilities include the following:

1. Low flow swales (channels)
2. Others identified as such on the drawings

B. The work includes:

1. Installing erosion and sedimentation controls
2. Clearing existing vegetation to allow for grading
3. Excavating to acceptable subgrade
4. Planting, seeding and mulching
5. Maintenance through the guarantee period

1.2 RELATED DOCUMENTS

A. Other specification Sections which directly relate to the work of this Section include:

1. Section 311000 – Site Clearing
2. Section 311400 – Earth Stripping and Stockpiling
3. Section 312300 – Excavation and Fill
4. Section 312500 – Erosion Control
5. Section 329200 – Turfs and Grasses
6. Section 334100 – Storm Utility Drainage Piping
7. Section 334900 – Storm Utility Drainage Structures

1.3 QUALITY ASSURANCE

A. The Owner may designate a Representative (with experience in drainage facilities) to be on the site during the drainage facility installation work. The Representative shall observe the work and will advise Owner and Contractor as to the acceptability of the completed work.

B. All planting operations shall be performed by experienced personnel under competent supervision. Education, experience and certification or license by appropriate organization may be reviewed to evaluate competence.

C. The actual locations and spacing of plants must be as shown on the plans or as approved by the Representative.

1.4 COORDINATION

A. The Contractor shall be responsible for notifying the Owner of the start of drainage facility work requiring observance by the Owner's Representative.

1.5 DELIVERY, STORAGE, AND HANDLING

A. Deliver plant materials to site in a healthy and undamaged condition immediately prior to placement. Plants not installed on the day of arrival at the site shall be stored in a shaded location and protected from the wind. Plants stored on site shall be protected from drying by covering roots with a moist mulch material. Plant roots must be watered if necessary to keep in a moist, but not wet, condition. Plants stored on site shall be planted within 3 days of delivery to the site unless agreed to in advance and appropriate precautions for ensuring plant viability are taken.

B. Move plant material with solid balls wrapped in burlap or in pots, with the exception of bare root stock.

C. Dead, unhealthy, injured or otherwise unacceptable plant materials shall be removed from the site and replaced as necessary.

D. Soils shall be protected during delivery and storage to prevent dehydration, minimize compaction, and maintain the integrity of the material.

E. Soil conditioners and amendments shall be delivered to the site in their original, unopened containers bearing the manufacturer's chemical analysis and name.

1.6 SUBMITTALS

A. Manufacturers Product Data

1. Submit manufacturer's literature and installation instructions attesting that the following materials meet the requirements specified:

a) Fertilizer
b) Mulch
c) Pipe
d) Loam
e) Compost
f) Soils
g) Filter fabric
h) Stone

B. Soil Test Reports

1. Prior to ordering soil materials, submit soil test report to the Representative for review and approval. Do not order materials until approval has been obtained. Delivered materials shall be from the same source as the tested material.

a) Topsoil: The Contractor shall employ a certified testing laboratory to test the material, and shall submit test representative samples of on-site and off-site topsoil reports to the Representative. Reports shall include:

i. Tests for Phosphorus, Potassium, Calcium, Soluble Salts, soil pH, and soil texture analysis in accordance with the current standards of the Association of Official Agriculture Chemists.

ii. Submit at least one month before any topsoil spreading is scheduled.

iii. Location of sample source.

C. Certificates

1. A Certificate of Compliance to the specifications shall be submitted by the nursery grower with each shipment of each type of plant, certifying that plants match the genus, species, and variety specified on the plant list.

D. Maintenance Manual

1. The Contractor shall submit a bound manual that details a schedule for proper maintenance of the plantings. This schedule shall include timing and methods for watering, fertilizing, mulching, pruning, mowing, and other maintenance operations for each type of supplied plant.

E. Submittal Schedule

1. Before installation:

a) Manufacturer's Product Data
b) Soil Test Reports
c) Plant Certification
d) Source of soil materials

2. After installation and before acceptance

a) Maintenance manual

1.7 GUARANTEE

A. Provide one-year guarantee from date of plant material acceptance.

B. Replace plant materials found dead or not in a healthy growing condition. Plants shall exhibit at least 75% healthy branching and foliage, and be free of insect or disease damage. Replace plants during normal planting season.

C. Replacement: plant materials shall be of same size and species, with a new guarantee commencing on date of replacement. The Engineer/Representative shall be given a three day notice of installation of replacement plants to allow inspection of plant material.

1.8 INSPECTION FOR PLANTING ACCEPTANCE

A. After installation and a minimum thirty (30) day maintenance period, the Contractor shall make written request to the Representative to perform an inspection to determine

whether the plantings are acceptable. If the plantings are acceptable, written notice will be given by the Representative to the Contractor stating that the guarantee period begins from the date of the inspection and acceptance.

B. If over 5% of the total number of plants are sickly or dead at the time of inspection, acceptance will not be granted, and the Contractor's responsibility for maintenance of all the plants shall be extended until replacements are made. All dead and unsatisfactory plants shall be promptly removed from the site. Replacements shall conform in all respects to the specification for new plants and shall be planted in the same manner.

PART 2 – PRODUCTS

2.1 MATERIALS

A. The mix in New England shall be "Native Warm Season Grass Mix" available from New England Wetland Plants, Inc., or approved equivalent.

B. Planted Vegetation, Bioretention Area. (NOT USED)

C. Planted Vegetation, Infiltration Area. (NOT USED)

D. Topsoil. Refer to section 312300.

E. Bioretention Soil Mixture. (NOT USED)

F. Underdrains. (NOT USED)

G. Filter Fabric. Mirafi 140N or equal.

H. Crushed Stone. One and one-half inch (1½") crushed stone per Section 312300 – Excavation and Fill.

I. Mulch. Double-shredded hardwood mulch, composted for a minimum of 6 months. Pine mulch is not acceptable.

J. Erosion Control Blanket. See Section 312500 – Erosion Control.

PART 3 - EXECUTION

3.1 EROSION AND SEDIMENT CONTROLS

A. The work under this item shall conform to the relevant provisions of Section 312500 – Erosion Control, and Section 014126.13 EPA NPDES Construction General Permit, and the following:

1. Site stabilization shall be substantially completed before flows are directed to the drainage facility, in order to prevent clogging.

2. Never use the drainage facilities as temporary sediment traps for construction activities.

3.2 CLEARING AND GRUBBING

A. The work under this item shall conform to the relevant provisions of Sections 311000 – Site Clearing and 311400 – Earth Stripping and Stockpiling, and the following:

1. Clearing and grubbing shall occur in proposed drainage facility locations, as indicated on the Plans. Protect from damage adjacent areas of vegetation to remain.

2. Prior to construction, rope or fence off the area selected for the drainage facility.

3. No construction equipment allowed to drive across the area intended to serve as the drainage facility.

3.3 EXCAVATION/EARTHWORK

A. The work under this item shall conform to the relevant provisions of Sections 311400 – Earth Stripping and Stockpiling and 312300 – Excavation and Fill, and the following:

1. The drainage facility shall be excavated to the subgrade shown on the Plans.

2. Use light earth-moving equipment that will minimize compaction of drainage facilities sub-grades. Vehicle/machinery traffic in the depression portion of the drainage facility shall be avoided to prevent compaction of the underlying soils. If machinery must be used in the drainage facility for grading the contractor shall use wide track or marsh track equipment or light equipment with turf type tires. Compaction can be alleviated by using primary tilling operations such as a chisel plow, ripper or subsoiler to a 12 inch depth.

3. If the drainage facility has previously been used as a sedimentation basin, accumulated sediment material shall be removed by hand or in such a fashion to avoid compaction as described above in 3.03A(2) and observed by the Representative before the subsurface is tilled.

4. Place soil backfill in lifts not to exceed 12 inches depth per lift. Do not use heavy equipment within the drainage facility footprint. Work from outside the drainage facility footprint with an excavator to place the soil. Add any required soil amendments during tilling.

5. The soil lifts shall be compacted by saturating the entire area of the drainage facility until water flows from the under drain.

6. Use an appropriate sediment control device to treat sediment-laden water discharged from the underdrain.

7. If the soil mixture becomes contaminated with unapproved soils during the construction of the facility, the contaminated material shall be removed and replaced with uncontaminated material at no extra cost to the owner.

8. Fine grade by hand raking. Final elevations shall be within 2 inches of the elevations shown on the Plans.

9. Never perform earthwork related to the construction of the drainage facilities during wet weather or winter periods. On-site soil mixing or placement is not allowed if soil is saturated or subject to water within 48-hours.

10. Cover and store soil to prevent wetting or saturation.

3.4 UNDERDRAIN INSTALLATION

(NOT USED)

3.5 SEEDING

A. The work under this item shall conform to the relevant provisions of Section 329200 – Turfs and Grasses, and the following:

1. Areas to be seeded shall be done between April 1 and June 15, or between August 30 and November 15. Do not seed if ground is saturated, snow covered, frozen, or in an otherwise unsuitable condition for seeding. Planting season may be extended earlier or later if weather conditions permit.

2. Seeding shall be done by hydroseed or by hand broadcasting. Do not use machinery that would result in soil compaction.

3. The seed bed shall be observed by the Representative prior to seeding. The seed bed shall be loosened by hand raking. Remove any stones, soil clods, or sticks larger than 2 inches in diameter.

4. In the event that vegetative cover has not become established by November 1, well composted organic mulch, jute netting, or other approved material shall be used to stabilize the site.

5. Use a low maintenance, rapidly germinating grasses, such as fescues.

6. Do not sod the basin floor or side slopes. Provide a dense turf of water tolerant grass.

3.6 PLANTING

A. The work under this item shall conform to the relevant provisions of Section 329000 – Planting, and the following:

1. Plant specified trees, shrubs and perennials between April 1 and June 1, or between August 30 and November 15. Do not plant if ground is saturated, snow covered, frozen, or in an otherwise unsuitable condition for planting. Planting season may be extended earlier or later if weather conditions permit.

2. Planting holes shall be at least twice the width of the root mass.

3. Remove all non-biodegradable pots, wrapping, and tags.

4. Place plants so that the root crown is 1 to 2 inches above grade.

5. Create a 4" high soil dike around each plant for watering.

6. Water plants by flooding the backfilled hole immediately following planting. Correct plant depth or alignment if they move during watering.

7. Place planting soils in 1-foot lifts and compact with minimal pressure until desired elevation is reached. Flooding the planting soils can be performed between each lift to provide proper compaction.

3.7 MULCHING

1. Prior to planting, place one half of the specified mulch layer in the specified planting area and work into the top 4 inches of soil.

2. Plant the vegetation as specified on the Plans.

3. Place the remaining double-shredded hardwood mulch to a depth of 3-4 inches around the plantings by hand.

4. Remove mulch deposits if spilled in locations outside of the planting areas.

5. Remove any pots, dead planting material or debris associated with planting.

6. If soil or materials fall on porous pavement or asphalt pavement, vacuum clean or clean as specified for the specific surface.

3.8 CLEAN-UP

A. Upon completion of the work, clean up work area and remove all excess debris from the site.

3.9 PLANTING STABILIZATION/MAINTENANCE

1. After final planting, water at 1" per square foot per week (less rain) during the stabilization period to ensure proper growth.

2. Ensure rain garden is protected from sediment laden discharges if portions of the site are not fully stabilized.

3. Monitor plantings for one year to ensure longevity.

4. Replace plantings as specified under the Guarantee section above.

5. Immediately following drainage facility construction, stabilize the floor and side slopes with a dense turf of water-tolerant grass.

6. Keep drainage facilities roped or fenced off while construction proceeds on other parts of the site.

7. Do not direct runoff into the drainage facility until the bottom and side slopes are fully stabilized.

END SECTION 334726

INTENTIONALLY LEFT BLANK

SECTION 334900 STORM DRAINAGE STRUCTURES

PART 1 – GENERAL

1.1 DESCRIPTION

A. This Section specifies requirements for furnishing and installing the site storm drainage system structures.

B. The work includes:

1. Site storm drainage system manholes, catch basins, separators (water quality units), underground stormwater detention facilities, diversion manholes, headwalls, flared end sections, and sediment control devices.

1.2 RELATED DOCUMENTS

A. Other specification Sections which directly relate to the work of this Section include:

1. Section 312300 – Excavation and Fill
2. Section 312319 – Dewatering
3. Section 312500 – Erosion Control
4. Section 321640 – Site Cast-in-Place Concrete
5. Section 334100 – Storm Utility Drainage Piping

1.3 SUBMITTALS

A. Shop drawings

1. Materials list of items proposed for the work.
2. Shop drawings or descriptive literature, or both, showing dimensions, joint and other details of all materials proposed for the work. Shop drawings shall be submitted to the Engineer for approval prior to ordering material.

B. As-Built Drawings

1. Submit 4 copies of As-Built Drawings upon completion and acceptance of work.
2. As-Built Drawings shall be complete and shall indicate the true measurement and location, horizontal and vertical, of all new drainage system construction. As-Built drawings shall include a minimum of three ties showing the distance to each catch basin and manhole from fixed permanent objects. As-Built drawings shall also contain any additional information required by the municipality, and shall be stamped with the seal of a Licensed Land Surveyor and Licensed Professional Engineer.

1.4 COORDINATION AND VERIFICATION

A. Coordinate the work with the termination of storm drain connections at buildings, connections to municipal systems, and trenching operations.

B. The contractor shall field verify and survey the size, location and elevations of all existing pipe and utility lines prior to ordering of materials for this utility system. A report of the findings of the verification survey shall be submitted to the engineer for information and comment. Contractor to notify the Engineer immediately of any discrepancies.

1.5 DELIVERY, STORAGE AND HANDLING

A. All materials shall be adequately protected from damage during transit. Structures shall not be dropped.

B. All structures and other appurtenances shall be inspected before placement in the work and any found to be defective from any cause, including damage caused by handling, and determined by the Engineer to be unrepairable, shall be replaced at no cost to the Owner.

C. Storage and handling of manholes, catchbasins, oil-grit separators, treatment units and other system appurtenances shall be in accordance with the manufacturer's recommendations.

1.6 INSPECTION

A. The manufacturer/supplier is responsible for the provision of all test requirements specified for each type of structure. In addition, any structure may be inspected at the plant for compliance with these specifications by an independent testing laboratory selected and paid by the Owner. The Contractor shall require the manufacturer's cooperation in these inspections.

B. Inspection of the structures may also be made after delivery. The structure shall be subject to rejection at any time on account of failure to meet any of the specification requirements, even though structure samples may have been accepted as satisfactory at the place of manufacture. Structures rejected after delivery shall be marked for identification and shall be removed from the site at once.

PART 2 – PRODUCTS

2.1 GENERAL

A. All materials for storm drainage system shall be new and unused.

2.2 STORM DRAIN MANHOLES

A. <u>Precast Units</u>

1. Structure: 48-inch minimum inside diameter, precast concrete units (4,000 psi minimum compressive strength) with eccentric cone section tapering to 24-inch diameter and monolithic base section meeting the requirements of ASTM C478. All structures shall be designed for HS-20 loading, and shall be sized to accept pipe penetrations as shown on the drawings.

2. Precast Unit Joint Seals: Butyl rubber O-ring type seals meeting the requirements of ASTM C990.

3. Openings for pipe and materials to be embedded in the walls of the manholes sections for joint seals shall be cast in the sections at the required locations during

manufacture. Sections with incorrectly cast and patched pipe openings will be rejected.

4. Openings shall be cast into the manhole sections to receive entering pipes during manufacture. The openings shall be sized to provide a uniform 2 inch maximum annular space between the outside of the pipe wall and the opening in the riser. After the pipe is in position, the annular space shall be solidly filled with nonshrink mortar. Care shall be taken to assure that the openings are located to permit setting of the entering pipe at its correct elevation.

B. Masonry Units

1. Brick shall conform to Sewer Brick (Made from Clay or Shale), ASTM designation C32, Grade MS or Building Brick (Solid Masonry Units Made from Clay or Shale), ASTM C62, Grade SW.

2. Concrete block shall be solid block and shall conform to the Specifications for Concrete Masonry Units for Construction of Catch Basins and Manholes, ASTM designation C139.

3. Mortar shall be in conformance with ASTM C270, Type M. The mortar shall be composed of Portland cement hydrated lime, and sand, in the proportions of 1 part cement to 1/4 part hydrated limit to 3-1/2 parts sand by volume.

4. Cement shall be Type I or II Portland cement conforming to ASTM C150, Standard Specification for Portland Cement. Where masonry is exposed to salt water, Type II shall be used.

5. Hydrated lime shall be Type S conforming to ASTM D207.

6. Sand for masonry mortar shall conform to the gradation requirements of ASTM C144.

C. Steps for manholes shall be Steel Reinforced Copolymer Polypropylene plastic step with at least a 14-inch wide stepping surface conforming to ASTM C478 and A615.

D. Manhole Frame and Cover: Grey iron casting conforming to ASTM A48, heavy duty, with word "DRAIN" embossed on cover. Letter size shall be three inches. Frame and cover shall have a minimum clear opening of 24 inches and have a minimum weight of 475 pounds. Frame and cover shall be LeBaron LK 110A or approved equal.

2.3 CATCH BASINS AND DROP INLET

A. Precast catch basins and drop inlets shall be manufactured in accordance with ASTM Designation C478 (4,000 psi minimum compressive strength) to the diameters and depths shown on the Drawings. All structures shall be designed for HS-20 loading. Precast unit joints shall be sealed with butyl rubber in accordance with ASTM C990.

B. Where required for oil and floating debris traps, a slot and opening shall be cast in the catch basin wall for mounting a cast iron trap over the outlet pipe.

C. When approved by the Engineer, catch basins and drop inlets may be constructed with brick or concrete block walls and poured reinforced concrete bases as an alternative to precast concrete units.

D. Brick and concrete block and other materials shall conform to Article 2.3(B).

E. Cast iron frames and grate shall conform to ASTM A48, Class 30. When located in accessible ways, grate openings shall meet the requirements of federal, state, and local regulations adopted under the Americans with Disabilities Act.

F. Single catch basin frame and grate shall be LeBaron LF-246 or approved equivalent with four flanges or with three flanges for use with gutter inlet or abutting vertical curb. Frame and grate for catch basin with shallow cover shall be LeBaron LF 244 or approved equivalent.

G. Double catch basin grate shall be LeBaron LV-248-2 or approved equivalent, with four flanges or with three flanges for use with gutter inlet or abutting vertical curb.

H. Catch basin oil and floating debris trap shall be Kleanstream The Eliminator for up to 18-inch outlet pipes, or approved equivalent.

I. Openings at top of concrete structures where curb inlets are required shall be 24 inches by 27 inches.

J. Landscape (Area) drains shall be ADS manufacturer, "NYOPLAST" In-Line drain with cast ductile iron dome grate.

2.4 GRIT AND OIL SEPARATOR

(NOT USED)

2.5 SUSPENDED SOLIDS SEPARATOR

A. <u>Separation Unit</u>

1. The separation unit shall be a manufactured stormwater treatment unit suitable for installation in a precast concrete structure. Suspended solids separators shall be made of precast concrete sections and shall be of the capacity and dimensions indicated on the Drawings. Suspended solids separators shall be as manufactured by Contech Engineered Solutions, LLC or approved equal.

B. <u>Precast Unit</u>

1. Precast sections shall be cured by an approved ASTM method and shall not be shipped nor subject to loading until the concrete compressive strength has attained 5,000 psi. Portland cement shall be Type II, ASTM C150.

2. Precast units shall be designed for the following loads and possible combinations thereof:

a) H-20 loading, manhole riser with frame and cones, plus the weight of soil above and the soil loading due to the depth of the structure below finished grade.

b) Weight of precast concrete structure.

c) Initial handling and erection loadings.

C. Precast Unit Joints: Butyl rubber section joint conforming to ASTM C990.

D. Manhole riser sections, manhole steps, frames and covers shall be as specified in Article 2.2.

2.6 STORMWATER DETENTION/INFILTRATION CHAMBERS

(NOT USED)

2.7 OUTLET CONTROL MANHOLES, DIVERSION MANHOLES OR STRUCTURES AND HEADWALLS

A. Structures shall be made of concrete or precast concrete and shall be of the size, capacity, and dimensions indicated on the Drawings. Precast outlet structures shall be as manufactured by Oldcastle Precast, Inc. or approved equal.

B. Precast sections shall be cured by an approved ASTM method and shall not be shipped nor subject to loading until the concrete compressive strength has attained 4,000 psi minimum and 28 days after fabrication. Portland cement shall be Type II, ASTM C150.

C. The precast unit shall be designed for the following loads and possible combinations thereof:

1. H-20 loading, manhole riser with frame and cones, plus the weight of soil above and the soil loading due to the depth of the structure below finished grade.

2. Weight of precast concrete structure.

3. Initial handling and erection loading.

4. Cast in place concrete shall be constructed in accordance with Section 033000 – Cast-in-Place Concrete.

D. Construction joints shall be sealed with a butyl rubber-based sealant.

E. Manhole riser sections, manhole steps, frames and covers shall be as specified for precast concrete storm drain manholes.

F. Grates and grills for outlet structures, which are not manufactured cast iron standards, shall be hot dip galvanized iron units shop constructed to fit the dimensions indicated on the drawings Safety bars shall be 60 Ksi reinforcing steel.

2.8 SILT SACKS/SEDIMENT CONTROL DEVICES

A. Install at locations shown on the drawings.

B. Manufacturer: ACF Environmental, Inc. or approved equal.

C. Material to be a polypropylene geotextile fabric with strength per ASTM D4884.

PART 3 EXECUTION

3.1 GENERAL

A. Contractor to verify the locations and types of existing pipes and structures at all points of connection prior to ordering new utility materials.

B. All structures shall be laid accurately to the locations and elevations shown on the drawings and in conformance with the structures manufacturer's recommendations.

C. As soon as the trench is excavated to the normal grade of the bottom of the trench, the Contractor shall immediately place the bedding material in the trench. The structure shall be firmly bedded in the compacted bedding material accurately to the locations and elevations shown on the Drawings.

D. Excavation, backfilling and compaction shall be as specified in Section 312300 – Excavation and Backfill.

E. Protection During Construction: The Contractor shall protect the installation at all times during construction, and movement of construction equipment, vehicles and loads over and adjacent to any structure shall be performed at the Contractor's risk.

At all times when structure installation is not in progress, all structure openings shall be closed by approved temporary watertight plugs. If water is in the trench when work is resumed, the plug shall not be removed until the trench has been dewatered and all danger of water entering the structure is eliminated.

3.2 MANHOLES, CATCH BASINS, AND DROP INLETS-PRECAST

A. Manholes Catch Basins and Drop Inlets shall be constructed at the locations and to the lines, grades, dimensions and design shown on Drawings or as required by the Engineer.

B. Precast concrete Units shall be installed in a manner that ensures watertight construction and all leaks in precast concrete structures shall be sealed. If required, precast concrete structures shall be repaired or replaced to obtain watertight construction.

C. Stubs shall be short pieces of pipe cut from the bell ends of the pipe. Stubs shall be plugged with brick masonry unless otherwise directed by the Engineer.

D. Manhole Inverts shall conform accurately to the size of the adjoining pipes.

1. Manhole inverts shall be constructed of 3,500 psi concrete as shown the Drawings.

2. Inverts shall be laid out in smooth diameter curves of the longest possible radius to provide uniform flow channels.

3. Invert shelves shall be graded with a 1-inch drop per 1-foot length sloped from the manhole walls.

E. Manhole steps shall be accurately positioned and embedded in the concrete when the section is cast. Precast-reinforced concrete manhole sections shall be set vertical and with sections and steps in true alignment.

F. All holes in sections used for their handling shall be thoroughly plugged with rubber plugs made specifically for this purpose or with mortar. The mortar shall be one part cement to 1-1/2 parts sand, mixed slightly damp to the touch, hammered into the holes until it is dense and an excess of paste appears on the surface, and finished smooth and flush with the adjoining surfaces.

G. Precast sections shall be level and plumb with approved joint seals. Water shall not be permitted to rise over newly made joints until after inspection and acceptance. All joints shall be watertight.

H. Openings which have to be cut in the sections in the field shall be carefully made to prevent damage to the riser. Damaged risers will be rejected and shall be replaced at no additional cost to the Owner.

I. Change-In-Type Structures. Where indicated on the drawings, existing subsurface drain structures shall be converted to the new structure types in the following manner;

1. Catch basins to Manholes

   a) Fill basin sump with 3000 psi concrete and create new inverts at the elevations and sizes indicated and in accordance with specifications and details for new drain manholes.

   b) Provide and adjust to grade new drain manhole frame and cover.

   c) Stockpile existing frame and grade per Owner directions.

2. Manholes to Catch Basins (inlets)

   a) Where sump is indicated on the drawings, replace existing manhole structure with new precast catch basin structure.

   b) Where sump is not indicated on the drawings, replace existing frame and cover with new frame and grate and adjust to grade per these specifications and details for new catch basins.

   c) Stockpile existing manhole frame and cover per Owner's directions.

3.3 BRICK MASONRY

A. Brick masonry structures shall be watertight. All leaks in brick masonry structures shall be sealed. All brick masonry shall be laid by skilled workmen.

B. All beds on which masonry is to be laid shall be cleaned and wetted properly. Brick shall be wetted as required to be damp, but free of any surface water when placed in the work. Bed joints shall be formed of a thick layer of mortar which shall be smoothed or furrowed slightly. Head joints shall be formed by applying a full coat of mortar on the entire brick end, or on the entire side, and then shoving the mortar covered end or side of the brick tightly against the bricks laid previously. The practice of buttering at the corners of the brick and then throwing the mortar or crappings in the empty joints will not be permitted. Dry or butt joints will not be permitted. Joints shall be uniform in thickness and approximately 1/4 inch thick.

C. Brickwork shall be constructed accurately to the required structure dimensions and tapered at the top to the dimensions of the flanges of the cast-iron frames, as shown on the Drawings.

D. Joints on the inside face of walls shall be tooled slightly concave with an approved jointer when the mortar is thumbprint hard. The mortar shall be compressed with complete contact along the edges to seal the surface of the joints.

E. All castings to be embedded in the brickwork shall be accurately set and built-in as the work progresses.

F. Water shall not be allowed to flow against brickwork or to rise on the masonry for 60 hours after it has been laid, and any brick masonry damaged in this manner shall be replaced as directed at no additional cost to the Owner. Adequate precautions shall be taken in freezing weather to protect the masonry from damage by frost.

3.4 CONCRETE MASONRY UNITS

A. Concrete masonry units shall be soaked in water before laying. As circular concrete block walls are laid-up, the horizontal joints and keyways shall be flushed full with mortar. As rectangular blocks are laid-up, all horizontal and vertical joints shall be flushed full with mortar. Plastering of the outside of block structures will not be required. No structure shall be backfilled until all mortar has completely set.

3.5 MANHOLE STEPS

A. Steps shall be cast into the precast walls during manufacture.

B. Steps in brick masonry and concrete units shall be installed as the masonry courses are laid.

3.6 CASTINGS

A. Cast-iron frames for grates and covers shall be well bedded in cement mortar and accurately set to the proposed grades.

B. All voids between the bottom flange and the structure shall be completely filled to make a watertight fit. A ring of mortar, at least one-inch thick and pitched to shed water away from the frame shall be placed over and around the outside of the bottom flange. The mortar shall extend to the outer edge of the masonry all around its circumference and shall be finished smooth. No visible leakage will be permitted.

C. Structures within the limits of bituminous concrete pavement shall be temporarily set at the elevation of the bottom of the binder course. After the binder course has been compacted, the structures shall be set at their final grade. Backfill necessary around such structures after the binder course has been completed shall be made with 3,500 psi concrete.

3.7 SUSPENDED SOLIDS SEPARATORS

A. Install Separators in accordance with the manufacturer's instructions.

B. Separator structures shall be placed on a foundation of 12-inch thick minimum of gravel material. If groundwater is encountered, the foundation base shall be 12-inch thick minimum of crushed stone. Place structures in the dry.

C. Precast sections shall be assembled with butyl rubber o-ring joint seals. The structure shall be watertight after assembly.

3.8 CLEANING, TESTING AND REPAIR

A. The Contractor shall clean the entire drainage system of all debris and obstructions. This shall include, removal of all formwork from structures, concrete and mortar droppings, construction debris and dirt. The system shall be thoroughly flushed clean and the Contractor shall furnish all necessary hose, pumps, pipe and other equipment that may be required for this purpose. No debris shall be flushed into existing drains, storm recharge chambers, storm drains and/or streams.

B. Testing and Correction of Defective Work: If a mandrel 3 feet long and 90 percent of the pipe diameter cannot be pulled through the completed pipe runs after 7 days of completed trench backfill, the pipe line shall be deemed unacceptable and the pipe lines shall be removed and replaced. The Contractor shall make the necessary repairs or replacements required to permanently provide an open and structurally sound drainage system capable of supporting the anticipated loading from all sources throughout the year.

3.9 FINAL INSPECTION

A. Upon completion of the work, and before final acceptance by the Engineer, the entire drainage system shall be subjected to a final inspection in the presence of the Engineer. The work shall not be considered as complete until all requirements for line, grade, cleanliness, mandrel tests and other requirements have been met.

END SECTION 334900

INTENTIONALLY LEFT BLANK

SECTION 344116 TRAFFIC CONTROL EQUIPMENT

PART 1 – GENERAL

1.1 DESCRIPTION

A. This Section covers the furnishing, handling and installation of vehicle loop detectors, loop detector amplifiers, all other equipment, materials and incidental costs necessary to provide a complete, fully operational traffic signal system as specific herein and as shown on the plans.

B. All work and materials shall conform to the relevant provisions of the Standard Specifications for Highways and Bridges, MassDOT, 1988, as amended February 25, 2010 and as specified herein.

1.2 SUBMITTALS

A. Within 30 days following execution of the Contract, the Contractor shall submit shop drawings for vehicle loop detectors, a list of equipment, and manufacturer's equipment specifications to the Engineer in accordance with the relevant provisions of MassDOT Section 815.20.

PART 2 – PRODUCTS

2.1 MATERIALS

A. The Contractor shall be responsible for verifying that the attached standard specifications and drawings included herein are current.

B. The contractor shall provide all labor, equipment and material required for the total maintenance of all existing and proposed temporary and permanent traffic signal control equipment within the project limits, including damage by automobile accidents, unless otherwise specified.

C. All equipment installed shall be listed on the MassDOT "Approved Equipment List" and compatible with the City of Quincy's traffic signal equipment.

2.2 TRAFFIC SIGNAL EQUIPMENT

A. The traffic signal controller units (CU), malfunction management units (MMU), detector amplifiers, cabinet power supply, bus interface units (BIUs) and all other ancillary traffic signal control components included in the traffic control cabinet shall comply with the National Electrical Manufacturers Association (NEMA) Standard No. TS 2-2003, Traffic Controller Assemblies with National Transportation Communications for ITS Protocol (NTCIP) Requirements.

B. Vehicle Loop Detectors – Wire loop detectors shall be installed in the roadway for vehicle detection. In advance of the loop detector installation, the Contractor shall mark, on site, the loop detectors with any changes required by field conditions such as manholes. The loop detector layout shall be inspected and approved by the Engineer before the loop detectors are installed.

All wire loop detectors shall be installed prior to final paving.

Loop wire shall be encased in a protected plastic tubing of PVC or polyethylene plastic, IMSA 5I-5,6.25mm outside diameter, and the wire may have cross-linked polyethylene insulation or it may have THHN/THWN insulation.

Splicing insulator shall be an approved re-enterable rigid body splice kit with a non-hardening sealing compound compatible with the wire insulation.

Splicing and connection shall be made in the pull box nearest the roadway loop sensor but not exceeding four loops per pull box. All loops included in a detector group as shown on the plans shall be spliced in a single pull box. Each lead and lead-in connector shall be stripped back and spliced using a pressure type wire connector applied with a crimping tool. Multiple loop sensors shall be identified as detailed on the plans.

Lead-in splicing shall be staggered to prevent contact with each other. Each crimped splice shall be soldered and insulated. The insulation material shall be heat-shrinked polyolefin. The shielded lead-in cable outer jacket and shield shall be stripped back sufficiently to ensure that the shield cannot come into contact with the spliced conductors. Follow the instructions of the kit manufacturer for this procedure when installing the re-enterable splice kit.

The splice shall be done on the day of the loop wire installation to prevent the entrance of any moisture into the plastic tubing.

The lead-in conductors shall be connected to the appropriate terminals in the controller cabinet, by using crimped or soldered terminal ends. The heat source for soldering shall be electrical not exceeding 30W capacity.

C. Loop Detector Amplifier and Rack Assemblies – The detector rack assemblies shall conform to Paragraph 5.3.4 of the NEMA TS 2 Standard. The detector rack assembly shall be supplied in a Type 2 configuration as defined in Table 5-9 of the NEMA TS 2 Standard.

The loop detector amplifiers shall conform to Subsection 6.5 of the NEMA TS 2 Standard. The loop detector amplifiers supplied shall be a Type C rack, two channel units with delay and extension timing internal to each unit's channel, as defined in Table 6-1 of the NEMA TS 2 Standard. (Note: Delay and/or extension timings shall be programmed in the controllers and not on the detector amplifiers). The two channel card rack loop amplifier units shall occupy one of the rack slots in the assembly.

The detector unit shall be capable of operating in a voltage range from 10.8 to 26.5 VDC. The unit shall operate from the cabinet's external power supply at 12 VDC.

The front portion of the detector rack shall be provided with a marker strip to allow identification of detector phase assignments. In addition to the required marker strip, the Contractor shall supply and install on the upper left hand comer of the back of the cabinet door a laminated, pictorial diagram depicting the traffic detector amplifier channel assignments. The assignment information contained shall include approach name, phase, detector number and terminal numbers.

PART 3 EXECUTION

3.1 COORDINATION

A. The Contractor is required to coordinate work with the local utilities to adjust, rebuild, reset or relocate all private utilities required by the scope of work and as directed by the Engineer. No additional compensation or extension of time shall be granted due to any delays that may result from failure to relocate utilities in a timely fashion.

3.2 TEMPORARY TRAFFIC SIGNALS

A. The Contractor is required to maintain existing vehicular operations and pedestrian operations during the construction period. This includes, but is not limited to furnishing, installing, removing and resetting; temporary signal foundations, signal posts vehicle indications, pedestrian indications, pedestrian push buttons, vehicle detection by inductive loop or video, temporary power and any other elements to provide traffic operations that are reasonably similar to the existing traffic operations. Construction activities may also require the contractor to modify existing intersection timing/phasing. Prior to modifying intersection timing/phasing, the contractor shall submit for approval a traffic signal schedule showing the revisions. No extra cost shall be paid for temporary traffic signals.

3.3 TESTING AND INSTALLATION OF LOOP DETECTORS

A. The following test procedure shall be performed in the presence of the Engineer before and after the loop sensor is sealed in the pavement as detailed below. The cost of equipment, labor, and materials to perform such testing and similar re-testing following repairs, replacement, or adjustment of any detector within the project area shall be included in the contract unit prices for these Items.

B. After installation of wire loop sensors in the roadway and installation of shielded lead-in connecting the loop sensors to the controller cabinet each loop sensor and lead-in combination shall be tested (at the controller cabinet) for proper installation. The resistance from lead to lead of the same loop shall not exceed three (3) ohms per three hundred (300) meters as measured by a high quality meter suitable for measurements of flow resistance in the range of 1 to 6 ohms.

A megohm meter test at 500 volts DC shall be made between the two leads of a loop/lead-in combination temporarily spliced together, butotherwise disconnected from all terminals, and the shield drain wire and the earth ground connection. These resistances shall be at least one hundred (100) megohms.

A megohm meter test at 500 volts DC shall be made between lead-in shield and the earth ground rod. This resistance shall be at least one hundred (100) megohms.

The meter used for these tests shall be checked for calibration each day of use by using a resistor block of ±5% resistors simulating loads of 1 megohm, 20 megohm and 100 megohms. The observed meter reading shall be ± 10% of the nominal resistor load.

If any loop sensor and lead-in combination fails to pass any one of the four (4) tests, it shall be repaired and then re-tested on two occasions at least two (2) weeks apart, and then shall pass on each re-test occasion. If the loop sensor lead-in combination does not pass all these re-tests, a new loop sensor and/or lead-in shall be installed, and shall pass these tests, at no additional cost.

After the above tests have been satisfactorily completed, all loop sensor/shielded lead-in inductances shall be measured and a written report of the results shall be filed with the Engineer and a copy stored with the "box prints" at the intersections.

END SECTION 330526.23

Appendix A

City of Quincy Conservation Commission

Order of Conditions DEP File No. 59-1261

Massachusetts Department of Environmental Protection
Bureau of Resource Protection - Wetlands
WPA Form 5 – Final Order of Conditions
Massachusetts Wetlands Protection Act M.G.L. c. 131, §40

MassDEP File Number:
59-1261

A. General Information

Important: When filling out forms on the computer, use only the tab key to move your cursor - do not use the return key.

1. From: Northeast Regional Office
Regional Office of the Department of Environmental Protection (MassDEP)

2. This issuance is for (check one): a. ☒ Final Order of Conditions b. ☐ Superseding Amended Order of Conditions

3. To: Applicant:

Dennis (a. First Name) Harrington (b. Last Name)
City of Quincy (c. Organization)
1305 Hancock Street (d. Mailing Address)
Quincy (e. City/Town) MA (f. State) 02169 (g. Zip Code)

4. Property Owner (if different from applicant):

Various – see Appendix A from Order of Conditions (a. First Name) (b. Last Name)
(c. Organization)
(d. Mailing Address)
(e. City/Town) (f. State) (g. Zip Code)

5. Project Location:

Town Brook through Quincy Center (a. Street Address) Quincy (b. City/Town)
See Appendix A from Order of Conditions (c. Assessors Map/Plat Number) (d. Parcel/Lot Number)
Latitude and Longitude, if known: 42d14m50s (e. Latitude) 71d00m05s (f. Longitude)

6. Property recorded at the Registry of Deeds for (attach additional information if more than one parcel):

Norfolk (a. County) (b. Certificate Number (if registered land))
See Appendix A from Order of Conditions (c. Book) (d. Page)

7. Dates: May 27, 2011 (a. Date Notice of Intent Filed) August 3, 2011 (b. Date Public Hearing Closed) August 9, 2011 (c. Date of OOC Issuance)

8. Final Approved Plans and Other Documents (attach additional plan or document references as needed):
See Special Condition #19

Massachusetts Department of Environmental Protection
Bureau of Resource Protection - Wetlands
WPA Form 5 – Final Order of Conditions
Massachusetts Wetlands Protection Act M.G.L. c. 131, §40

MassDEP File Number:

59-1261

b. Prepared By	c. Signed and Stamped by
d. Final Revision Date	e. Scale
f. Additional Plan or Document Title	g. Date

B. Findings

1. Findings pursuant to the Massachusetts Wetlands Protection Act:

   Following the review of the above-referenced Notice of Intent and based on the information provided in this application and presented at the public hearing, this Commission finds that the areas in which work is proposed is significant to the following interests of the Wetlands Protection Act. Check all that apply:

a. ☐ Public Water Supply b. ☐ Land Containing Shellfish c. ☒ Prevention of Pollution

d. ☐ Private Water Supply e. ☒ Fisheries f. ☒ Protection of Wildlife Habitat

g. ☐ Groundwater Supply h. ☒ Storm Damage Prevention i. ☒ Flood Control

2. This Commission hereby finds the project, as proposed, is: (check one of the following boxes)

Approved subject to:

a. ☒ the following conditions which are necessary in accordance with the performance standards set forth in the wetlands regulations. This Commission orders that all work shall be performed in accordance with the Notice of Intent referenced above, the following General Conditions, and any other special conditions attached to this Order. To the extent that the following conditions modify or differ from the plans, specifications, or other proposals submitted with the Notice of Intent, these conditions shall control.

Denied because:

b. ☐ the proposed work cannot be conditioned to meet the performance standards set forth in the wetland regulations. Therefore, work on this project may not go forward unless and until a new Notice of Intent is submitted which provides measures which are adequate to protect these interests, and a final Order of Conditions is issued. **A description of the performance standards which the proposed work cannot meet is attached to this Order.**

c. ☐ the information submitted by the applicant is not sufficient to describe the site, the work, or the effect of the work on the interests identified in the Wetlands Protection Act. Therefore, work on this project may not go forward unless and until a revised Notice of Intent is submitted which provides sufficient information and includes measures which are adequate to protect the Act's interests, and a final Order of Conditions is issued. **A description of the specific information which is lacking and why it is necessary is attached to this Order as per 310 CMR 10.05(6)(c).**

Inland Resource Area Impacts: Check all that apply below. (For Approvals Only)

3. ☐ Buffer Zone Impacts: Shortest distance between limit of project disturbance and wetland boundary (if available) _____ a. linear feet

Massachusetts Department of Environmental Protection
Bureau of Resource Protection - Wetlands
WPA Form 5 – Final Order of Conditions
Massachusetts Wetlands Protection Act M.G.L. c. 131, §40

MassDEP File Number:
59-1261

Resource Area	Proposed Alteration	Permitted Alteration	Proposed Replacement	Permitted Replacement
4. ☒ Bank	3,425 a. linear feet	3,425 b. linear feet	2,525 c. linear feet	2,525 d. linear feet
5. ☒ Bordering Vegetated Wetland	0 a. square feet	0 b. square feet	500 c. square feet	500 d. square feet
6. ☒ Land Under Waterbodies and Waterways	17,040 a. square feet	17,040 b. square feet	14,960 c. square feet	14,960 d. square feet
	e. c/y dredged	f. c/y dredged		

B. Findings (cont.)

Resource Area	Proposed Alteration	Permitted Alteration	Proposed Replacement	Permitted Replacement
7. ☐ Bordering Land Subject to Flooding	a. square feet	b. square feet	c. square feet	d. square feet
Cubic Feet Flood Storage	e. cubic feet	f. cubic feet	g. cubic feet	h. cubic feet
8. ☐ Isolated Land Subject to Flooding	a. square feet	b. square feet		
Cubic Feet Flood Storage	c. cubic feet	d. cubic feet	e. cubic feet	f. cubic feet
9. ☐ Riverfront area	a. total sq. feet	b. total sq. feet		
Sq ft within 100 ft	c. square feet	d. square feet	e. square feet	f. square feet
Sq ft between 100-200 ft	g. square feet	h. square feet	i. square feet	j. square feet

Coastal Resource Area Impacts: Check all that apply below. (For Approvals Only)

10. ☐ Designated Port Areas	Indicate size under Land Under the Ocean, below			
11. ☐ Land Under the Ocean	a. square feet	b. square feet		
	c. c/y dredged	d. c/y dredged		
12. ☐ Barrier Beaches	Indicate size under Coastal Beaches and/or Coastal Dunes below			
13. ☐ Coastal Beaches	a. square feet	b. square feet	c. c/y nourishmt.	d. c/y nourishmt.
14. ☐ Coastal Dunes	a. square feet	b. square feet	c. c/y nourishmt.	d. c/y nourishmt.
15. ☐ Coastal Banks	a. linear feet	b. linear feet		
16. ☐ Rocky Intertidal Shores	a. square feet	b. square feet		
17. ☐ Salt Marshes	a. square feet	b. square feet	c. square feet	d. square feet

18. ☐ Land Under Salt Ponds	a. square feet	b. square feet		
	c. c/y dredged	d. c/y dredged		
19. ☐ Land Containing Shellfish	a. square feet	b. square feet	c. square feet	d. square feet
20. ☒ Fish Runs	Indicate size under Coastal Banks, inland Bank, Land Under the Ocean, and/or inland Land Under Waterbodies and Waterways, above			
	a. c/y dredged	b. c/y dredged		
21. ☐ Land Subject to Coastal Storm Flowage	a. square feet	b. square feet		

C. General Conditions Under Massachusetts Wetlands Protection Act

(only applicable to approved projects)

1. Failure to comply with all conditions stated herein, and with all related statutes and other regulatory measures, shall be deemed cause to revoke or modify this Order.

2. The Order does not grant any property rights or any exclusive privileges; it does not authorize any injury to private property or invasion of private rights.

3. This Order does not relieve the permittee or any other person of the necessity of complying with all other applicable federal, state, or local statutes, ordinances, bylaws, or regulations.

4. The work authorized hereunder shall be completed within three years from the date of this Order unless either of the following apply:
   a. the work is a maintenance dredging project as provided for in the Act; or
   b. the time for completion has been extended to a specified date more than three years, but less than five years, from the date of issuance. If this Order is intended to be valid for more than three years, the extension date and the special circumstances warranting the extended time period are set forth as a special condition in this Order.

5. This Order may be extended by the issuing authority for one or more periods of up to three years each upon application to the issuing authority at least 30 days prior to the expiration date of the Order.

6. Any fill used in connection with this project shall be clean fill. Any fill shall contain no trash, refuse, rubbish, or debris, including but not limited to lumber, bricks, plaster, wire, lath, paper, cardboard, pipe, tires, ashes, refrigerators, motor vehicles, or parts of any of the foregoing.

7. This Order is not final until all administrative appeal periods from this Order have elapsed, or if such an appeal has been taken, until all proceedings before MassDEP have been completed.

8. No work shall be undertaken until the Order has become final and then has been recorded in the Registry of Deeds or the Land Court for the district in which the land is located, within the chain of title of the affected property. In the case of recorded land, the Final Order shall also be noted in the Registry's Grantor Index under the name of the owner of the land upon which the proposed work is to

be done. In the case of the registered land, the Final Order shall also be noted on the Land Court Certificate of Title of the owner of the land upon which the proposed work is done. The recording information shall be submitted to MassDEP on the form at the end of this Order, which form must be stamped by the Registry of Deeds, prior to the commencement of work.

9. A sign shall be displayed at the site not less then two square feet or more than three square feet in size bearing the words,

"Massachusetts Department of Environmental Protection" [or, "MassDEP"]

"File Number 59-1261"

C. General Conditions Under Massachusetts Wetlands Protection Act

10. Where the MassDEP is requested to issue a Superseding Order, the Conservation Commission shall be a party to all agency proceedings and hearings before MassDEP.

11. Upon completion of the work described herein, the applicant shall submit a Request for Certificate of Compliance (WPA Form 8A) to MassDEP.

12. The work shall conform to the plans and special conditions referenced in this order.

13. Any change to the plans identified in Condition #12 above shall require the applicant to inquire of MassDEP in writing whether the change is significant enough to require the filing of a new Notice of Intent.

14. The Agent or members of the Conservation Commission and MassDEP shall have the right to enter and inspect the area subject to this Order at reasonable hours to evaluate compliance with the conditions stated in this Order, and may require the submittal of any data deemed necessary by the Conservation Commission or MassDEP for that evaluation.

15. This Order of Conditions shall apply to any successor in interest or successor in control of the property subject to this Order and to any contractor or other person performing work conditioned by this Order.

16. Prior to the start of work, and if the project involves work adjacent to a Bordering Vegetated Wetland, the boundary of the wetland in the vicinity of the proposed work area shall be marked by wooden stakes or flagging. Once in place, the wetland boundary markers shall be maintained until a Certificate of Compliance has been issued by MassDEP.

17. All sedimentation barriers shall be maintained in good repair until all disturbed areas have been fully stabilized with vegetation or other means. At no time shall sediments be deposited in a wetland or water body. During construction, the applicant or his/her designee shall inspect the erosion controls on a daily basis and shall remove accumulated sediments as needed. The applicant shall immediately control any erosion problems that occur at the site and shall also immediately notify MassDEP, which reserves the right to require additional erosion and/or damage prevention controls it may deem necessary. Sedimentation barriers shall serve as the limit of work unless another limit of work line has been approved by this Order.

NOTICE OF STORMWATER CONTROL AND MAINTENANCE REQUIREMENTS

18. **The work associated with this Order (the "Project") is** (1) ☐ **is not** (2) ☒ **subject to the Massachusetts Stormwater Standards. If the work is subject to the Stormwater Standards, then the project is subject to the following conditions:**
a) All work, including site preparation, land disturbance, construction and redevelopment, shall be implemented in accordance with the construction period pollution prevention and erosion and sedimentation control plan and, if applicable, the Stormwater Pollution Prevention Plan required by the National Pollution Discharge Elimination System Construction General Permit as required by Stormwater Condition 8. Construction period erosion, sedimentation and pollution control measures and best management practices (BMPs) shall remain in place until the site is fully stabilized.

C. General Conditions Under Massachusetts Wetlands Protection Act (cont.)

b) No stormwater runoff may be discharged to the post-construction stormwater BMPs unless and until a Registered Professional Engineer provides a Certification that:
i. all construction period BMPs have been removed or will be removed by a date certain specified in the Certification. For any construction period BMPs intended to be converted to post construction operation for stormwater attenuation, recharge, and/or treatment, the conversion is allowed by the MassDEP Stormwater Handbook BMP specifications and that the BMP has been properly cleaned or prepared for post construction operation, including removal of all construction period sediment trapped in inlet and outlet control structures;
ii. as-built final construction BMP plans are included, signed and stamped by a Registered Professional Engineer, certifying the site is fully stabilized;
iii. any illicit discharges to the stormwater management system have been removed, as per the requirements of Stormwater Standard 10;
iv. all post-construction stormwater BMPs are installed in accordance with the plans (including all planting plans) approved by the issuing authority, and have been inspected to ensure that they are not damaged and that they are in proper working condition;
v. any vegetation associated with post-construction BMPs is suitably established to withstand erosion.

c) The landowner is responsible for BMP maintenance until the issuing authority is notified that another party has legally assumed responsibility for BMP maintenance. Prior to requesting a

Certificate of Compliance, or Partial Certificate of Compliance, the responsible party (defined in General Condition 18(e) shall execute and submit to the issuing authority an Operation and Maintenance Compliance Statement ("O&M Statement) for the Stormwater BMPs identifying the party responsible for implementing the stormwater BMPs Operation and Maintenance Plan ("O&M Plan") and certifying the following: *i.)* the O&M Plan is complete and will be implemented upon receipt of the Certificate of Compliance, and *ii.)* the future responsible parties shall be notified in writing of their ongoing legal responsibility to operate and maintain the stormwater management BMPs and implement the Stormwater Pollution Prevention Plan.

d) Post-construction pollution prevention and source control shall be implemented in accordance with the long-term pollution prevention plan section of the approved Stormwater Report and, if applicable, the Stormwater Pollution Prevention Plan required by the National Pollution Discharge Elimination System Multi-Sector General Permit.

e) Unless and until another party accepts responsibility, the landowner, or owner of any drainage easement, assumes responsibility for maintaining each BMP. To overcome this presumption, the landowner of the property must submit to the issuing authority a legally binding agreement of record, and acceptable to the issuing authority, evidencing that another entity has accepted responsibility for maintaining the BMP, and that the proposed responsible party shall be treated as a permittee for purposes of implementing the requirements of Conditions 18(f) through 18(k) with respect to that BMP. Any failure of the proposed responsible party to implement the requirements of Conditions 18(f) through 18(k) with respect to that BMP shall be a violation of the Order of Conditions or Certificate of Compliance. In the case of stormwater BMPs that are serving more than one lot, the legally binding agreement shall also identify the lots that will be serviced by the stormwater BMPs. A plan and easement deed that grants the responsible party access to perform the required operation and maintenance must be submitted along with the legally binding agreement.

f) The responsible party shall operate and maintain all stormwater BMPs in accordance with the design plans, the O&M Plan, and the requirements of the Massachusetts Stormwater Handbook.

C. General Conditions Under Massachusetts Wetlands Protection Act (cont.)

g) The responsible party shall:
1. Maintain an operation and maintenance log for the last three (3) consecutive calendar years of inspections, repairs, maintenance and/or replacement of the stormwater management system or any part thereof, and disposal (for disposal the log shall indicate the type of material and the disposal location);
2. Make the maintenance log available to MassDEP and the Conservation Commission ("Commission") upon request; and
3. Allow members and agents of the MassDEP and the Commission to enter and inspect the site to evaluate and ensure that the responsible party is in compliance with the requirements for each BMP established in the O&M Plan approved by the issuing authority.

h) All sediment or other contaminants removed from stormwater BMPs shall be disposed of in accordance with all applicable federal, state, and local laws and regulations.

i) Illicit discharges to the stormwater management system as defined in 310 CMR 10.04 are prohibited.

j) The stormwater management system approved in the Order of Conditions shall not be changed without the prior written approval of the issuing authority.

k) Areas designated as qualifying pervious areas for the purpose of the Low Impact Site Design Credit (as defined in the MassDEP Stormwater Handbook, Volume 3, Chapter 1, Low Impact Development Site Design Credits) shall not be altered without the prior written approval of the issuing authority.

l) Access for maintenance, repair, and/or replacement of BMPs shall not be withheld. Any fencing constructed around stormwater BMPs shall include access gates and shall be at least six inches above grade to allow for wildlife passage.

☒ **FOC** Special Conditions (see the attached sheet(s) for additional conditions numbered 19 thru 68.

Brief Description of Project:

The proposed project is for the realignment of 1700 linear feet of Town Brook in Quincy Center to a new 1200-linear-foot alignment adjacent along the south side of the Concourse Roadway.

FINAL ORDER OF CONDITIONS
DEP File Number 59-1261

Special Conditions

19. All work shall conform with the following plans, reports and special conditions:

    Plans titled: "Town Brook Enhancement Project, Notice of Intent, Quincy, MA." 26 sheets. Prepared by Stephenson Design Group, LLC and stamped by Karlis Skulte, P.E. #47765. Final revision date: July 27, 2011. Scale: as shown.

    Document entitled: "Preliminary Design of Flow Restoration in Town Brook, Quincy MA." Prepared by Gomez & Sullivan Engineers, P.C. Final Report dated March, 2011.

    Document entitled: "MassDEP 401 Water Quality Certification, USACOE 404 Category 2 Permit. Prepared by Stephenson Design Group, LLC, and Lucas Environmental, LLC. Dated September 23, 2011.

    Document entitled: "Request for Information, Town Brook Enhancement Project, DEP File #059-1261, Quincy, Massachusetts." 80 pages including attachments. Prepared by Stephenson Design Group, LLC. Dated November 21, 2011.

Pre-Construction:

20. A copy of this Superseding Order shall be included in all construction contracts and shall supersede any conflicting requirements.

21. No work shall commence on-site until all appeal periods have elapsed and this Superseding Order of Conditions has been recorded with the Registry of Deeds and the MassDEP has been formally notified via the form provided at the end of this Order.

22. Any proposed or executed change in the plans approved under this Superseding Order shall require the applicant to file a new Notice of Intent with the Quincy Conservation Commission or to inquire of the MassDEP in writing whether the change is substantial enough to require a new filing. A copy shall be sent at the same time to the Quincy Conservation Commission.

23. Erosion controls shall be placed on site between areas of proposed work and resource areas. Haybales and/or silt fence must be staked. Silt fencing must be entrenched. Alternative types of barriers (such as straw, coir, or Filter mitt) may be used with prior approval from MassDEP.

24. An adequate stockpile of erosion control materials shall be on site at all times for emergency or routine replacement and shall include materials to repair or replace silt fences, hay bales, stone riprap filter berms, or any other devices planned for use during construction.

25. The applicant shall employ an Environmental Monitor certified in Massachusetts as a Professional Engineer and with experience in stream construction techniques. This monitor will ensure that all work relating to placement of the geo-textile materials and construction of the low-flow channel, modified channel, resting areas, riffles, and bordering vegetated wetland island are constructed as designed and shall be given the authority to stop work in the event of non-compliance with this Final Order. This monitor shall report directly to Mass DEP and the Division of Marine Fisheries (DMF) on a bi-weekly basis. The name and address of this Monitor shall be provided to MassDEP and DMF prior to the start of work.

26. **Prior to construction on this site,** there shall be a pre-construction meeting between the project supervisor, the contractor responsible for the work, a member of the Quincy Conservation Commission or its Administrator, the Environmental Monitor and representatives of MassDEP and DMF to ensure that the requirements of this Superseding Order of Conditions are understood. Arrangements shall be made two weeks prior to any activity to arrange for the pre-construction meeting.

27. **Prior to construction on this site,** a plan with narrative shall be prepared describing the method for placing stone within both the cast-in-place and pre-cast sections of culvert. There shall be approval from DEP in writing prior to construction.

28. **Prior to the commencement of construction,** a dewatering plan shall be prepared and submitted to MassDEP for review and approval. There shall be approval from DEP in writing prior to construction.

29. All plans, reports, and information referenced in this Superseding Order of Conditions shall be provided to MassDEP and the Quincy Conservation Commission simultaneously.

Project Specific:

30. Unless otherwise allowed by DMF, there shall be no construction that results in a discharge of waters to the existing Town Brook smelt run between March 1st and May 31st.

31. The downstream connection point shall be constructed prior to the upstream tie-in point becoming functional. The upstream connection point shall be constructed after the approximately 1200 linear feet of new culvert and low-flow channel are completed.

32. The embedded material proposed within the culvert shall be set flush to the existing grade of the stream channel bottom at both the culvert outlet, such that there will be no physical barrier to fish passage.

33. Construction of the proposed project incorporating the elevated wall along Parcel 90 (Sheet C-4.3), and the "Alternate Work Plan" dated October 27, 2011, both prepared by Stephenson Design Group, may be implemented upon the written consent of the property owner of Parcel D90, upon an eminent domain taking, or as otherwise may be authorized in accordance with the laws of the Commonwealth. When property considerations are finalized, notice shall be provided to MassDEP and DMF.

34. A gravity-flow hydraulic connection, described in the Gomez and Sullivan Report as the Tunnel Intake Area Gravity Option, that will augment flow into Town Brook shall be constructed within the Tunnel Intake Area of the Burgin Conduit and the Town Brook channel by means of a concrete channel or the installation of a buried pipe connection. Flow to this new channel or pipe shall be controlled by water-tight stop logs in accordance with an operating plan approved by the United States Army Corps of Engineers (USACE), provided that the applicant may propose to incorporate automatic sluice gates in the design in lieu of one or more stop logs. Construction of the gravity flow connection may only occur upon receipt of all necessary approvals, including, but not limited to, approval of a request to modify the existing structure from the USACE. All permit and approval applications necessary to construct and operate the flow augmentation structure shall be filed prior to the completion of the construction of the realigned Town Brook channel.

35. The gravity flow connection described in Condition #34 shall be constructed and operational prior to the diversion of Town Brook into the realigned channel, provided that, if despite the good faith effort of the applicant, the final permits and approvals necessary to construct the flow augmentation structure described in Condition #34 are not obtained prior to the date that the new alignment is ready to receive flow from the Brook, then the gravity flow option

shall be constructed no later than six months from the date such final permits and approvals are obtained. Pending obtaining such final permits and approvals, Town Brook may be diverted into the new alignment channel upon completion of its construction in accordance with final approved plans.

36. In the event that the results of the Monitoring Program set forth in Special Condition #52 indicate that additional flow augmentation is required to improve habitat functions, and upon the written request of DMF, modification of the diversion weir, as described in the Gomez & Sullivan Report as the Centre Street Junction Gravity Option, shall be constructed no later than 6 months from the date that all necessary approvals are obtained, including, but not limited to, approval of a request to modify this structure from the USACE.

37. In order to facilitate compliance with the provisions of Special Conditions #34 and #36, the applicant, in conjunction with DMF and other necessary state agencies, shall be obligated to enter into a Memorandum of Agreement within 60 days of the issuance of a Final Order of Conditions that will address the permitting, design, construction, operational, and financial responsibilities of the parties to complete the improvements described in Special Conditions #34 and #36.

38. In the event that the applicant is not able to obtain the permits or approvals necessary to implement the gravity flow retrieval option, or modification of the diversion weir, if required, then the applicant shall notify MassDEP and DMF of its inability to secure said permits or approvals. MassDEP, in coordination with DMF, shall notify the applicant that a proposal for an alternative method of flow augmentation is required and shall establish timelines for submittal and implementation of this proposal to be submitted to MassDEP and DMF for review and approval.

39. A submittal of a Letter of Map Revision (LOMR) application shall be made to the Federal Emergency Management Agency (FEMA) by the City of Quincy with a copy to MassDEP, notifying FEMA of the proposed change in the location of Town Brook culvert and channel and, if applicable, any change in the extent of flooding during the 100-year flood event, or any change to the floodway. Application shall be made within four months of the discharge of flows within the new alignment.

40. If oil and/or hazardous materials (OHM) are identified during implementation of the project (including excavation, removal and/or disposal of contaminated soil, pumping/dewatering of contaminated groundwater, or working in contaminated media), notification pursuant to the MA Contingency Plan (310 CMR 40.0000) must be made to MassDEP. A Licensed Site Professional (LSP) may be retained to determine if notification is required and, if need be, render appropriate opinions. Construction of protocols and procedures should reflect the potential for discovery of OHM during the construction period and appropriate tests should be conducted, prior and during construction, for known or suspected contamination.

41. Illicit channel connections, including, but not limited to, those between Station17+00 and 18+00, shall be eliminated in accordance with 314 CMR 9.06(6)(a)(10).

42. Prior to the start of construction, final plans shall be provided to MassDEP and DMF for review and approval, including detail of the vertical transition point in proximity to the downstream limits of work at approximately Station 21+00 showing how a smoother vertical transition at the channel bottom may be implemented in this area to improve the conditions resulting from the existing channel failure in this location, to the extent practicable, and provided it can be demonstrated that no adverse channel design performance issues can be shown to result from this repair.

43. To further improve the exclusion of fish from the decommissioned channel, DMF may recommend modifications to the weir/baffle design, which shall be incorporated within the final plans to be submitted to MassDEP and DMF for review and approval.

44. Final plans regarding the bordering vegetated wetland plantings and enhanced shade tree plantings to the maximum extent practicable accounting for growth criteria and other relevant considerations shall be submitted to MassDEP for review and approval prior to construction. There shall be no work until approval is received in writing from DEP.

45. As stated in the 401 Water Quality Certification Application, the applicant shall prepare a Town Brook Watershed Master Plan addressing Quincy Center and surrounding neighborhoods adjacent to Town Brook and will coordinate this Master Plan with the developer of the Urban Revitalization District.

Stormwater:

46. The 12 existing point-source discharges shall be retrofitted with catch basin inserts as described in Attachment 1 of the November 21, 2011 Response to Request for Information cited in Special Condition #19 of this document.

47. Maintenance of these inserts shall be in accordance with the "Sample Maintenance Agreement" included in Attachment 1 of the November 21, 2011 Response to Request for Information cited in Special Condition #19 of this document. This shall be an on-going condition and shall be included in any Certificate of Compliance and shall not expire with the issuance of a Certificate of Compliance.

48. As part of the comprehensive stormwater management program currently under development in connection with the Quincy Center Redevelopment Project, any Best Management Practices (BMPs) implemented within the Concourse Roadway and/or project area as approved as part of this SOC may be upgraded or replaced by new BMPs provided that there are similar or equivalent TSS removal rates.

49. The Comprehensive Stormwater Management Plan for the Quincy Center Redevelopment Project must comply with the MA Stormwater Standards for all discharges to the existing or proposed Town Brook channel. This includes discharges through existing pipe outlets and new pipe outlets installed as part to the Town Brook Enhancement Project and the Concourse Roadway Improvement Project.

50. Stormwater from the Quincy Center Redevelopment Project shall be in compliance with the MA Stormwater Standards and shall be directed to Town Brook.

Monitoring:

51. A permanent staff gage shall be installed at the inside of the stream bend to assist in monitoring sediment accumulation. A gage or benchmark shall be placed along the outside of the stream bend to assist in monitoring for scour. The staff gage(s) should be installed so as to be visible from street level.

52. The bordering vegetated wetland (BVW) island shall be monitored by the Environmental Monitor or qualified designee for success of plantings as well as for scour or deposition of materials, including both sediments and debris. Failed plantings shall be replaced with similar species as approved by MassDEP. A monitoring report shall be submitted to DEP at the beginning and end of each growing season for three years and shall include recommendations for replacement, as required.

53. The applicant shall submit a proposal for a smelt monitoring study shall be submitted to DMF for review and approval. The study shall include three years of monitoring and shall incorporate 2-3 site visits per week between March 1st and May 31st of each monitoring year. The proposal shall include: (1) documentation of the spatial and temporal distribution of smelt eggs, (2) sediment accumulation, water depth, and velocity should be measured at each inspection at the daylighted spawning riffles, resting pools, and at the stream bend, and (3) water quality (including dissolved oxygen and temperature) and effectiveness of the fish exclusion barrier shall be monitored.

54. The applicant shall submit a channel monitoring plan in order to identify the development of any scour pools, perched conditions, invert drops or any other obstructions to fish passage, especially at the transition between the new section of channel and the existing channel just south of Revere Road. If any obstructions to fish passage are observed, a remedial action plan shall be submitted within 30 days of the identification of the obstruction that will avoid or reduce impacts to fish movement.

55. The applicant shall submit a remedial action proposal in the event that DMF concludes that the channel's design specifications are not met and, as a result, significant smelt egg mortality results. This remedial action proposal shall be submitted to MassDEP and DMF for review and approval within the time set forth in the notice to the applicant that a remedial action is required.

56. The structural integrity and capacity of the banks, including the wall on Parcel 90, and channel of both the realigned portion of Town Brook and the downstream portion of the brook within the project area, being intergral to protection of flood control, storm damage prevention and protection of fisheries, shall be maintained. This shall include, but is not limited to, maintenance of the channel bottom to address sedimentation, preservation of the spawning substrate, and prevention of any conditions that may serve as an obstruction to fish passage as long as the fish continue to return to Town Brook. In addition, all vegetative plantings shall be maintained. This on-going condition shall be included in any Certificate of Compliance and shall not expire with the issuance of a Certificate of Compliance.

57. Once achieved, flow augmentation shall be on-going to ensure protection of the fish run and spawning habitat. This on-going condition for protection of fisheries shall be included in any Certificate of Compliance and shall not expire with the issuance of a Certificate of Compliance.

Other:

58. An operation-and-maintenance (O&M) program shall be implemented as outlined in Appendix F of the 401 Water Quality Certification application. This shall be an on-going condition and shall be included in any Certificate of Compliance and shall not expire with the issuance of a Certificate of Compliance.

59. This O&M program shall reflect that removal of sediments will require prior consultation with MassDEP and MA DMF and shall specify equipment to be used in for removal of accumulated sediments.

60. At no time during or after construction shall fill or other materials be placed, slump into or fall beyond the limit of grading as shown on the plan. The applicant shall be responsible for inspecting and maintaining all slopes and shall immediately notify the MassDEP and the Quincy Conservation Commission if slumping, erosion or encroachment occurs.

61. During work on this project, there shall be no discharge or spillage of fuel, oil or other pollutants, including sediments, onto any part of the site. The applicant shall take all reasonable precautions to prevent the release of pollutants by ignorance, accident or vandalism.

62. A copy of the final Construction Storm Water Pollution Plan (SWPPP) shall be submitted to MassDEP and the Quincy Conservation Commission prior to construction.

63. The developer or contractor responsible for the project's completion shall be notified of, and understand, the requirements of this Superseding Order of Conditions. A copy of this Order shall be kept on-site while activities regulated by this Order are being performed.

64. If any unforeseen problems occur during construction, upon discovery, the applicant shall immediately notify MassDEP and the Quincy Conservation Commission, and a meeting shall be held to determine the corrective measures to be employed. The applicant shall then act to correct the problem using the corrective measures

agreed upon.

65. Upon stabilization of the site, all erosion controls shall be removed. A Certificate of Compliance will not be issued until all controls are removed.

66. Upon completion of this project, the applicant shall request a Certificate of Compliance from the MassDEP and shall submit the following information with the request:

    a. A written statement by a professional engineer or land surveyor registered in the Commonwealth of Massachusetts certifying compliance with the approved plans referenced above and this Superseding Order of Conditions and setting forth deviations, if any exits;
    b. An as-built site plan prepared by a registered land surveyor or registered professional engineer showing location and grades of the project.
    c. A final wetland replication report.

67. This Order shall apply to all successors or assigns in interest or control and any other party engaging in activity on the property identified in the Notice of Intent.

68. This Order of Conditions supersedes all prior Orders under DEP File #59-1261.

D. Findings Under Municipal Wetlands Bylaw or Ordinance

To the extent that the Order is based on a municipal bylaw or ordinance, and not on the Massachusetts Wetlands Protection Act or regulations, MassDEP has no jurisdiction to supersede the local bylaw order.

E. Issuance

This Order is valid for three years, unless otherwise specified as a special condition pursuant to General Conditions #4, from the date of issuance.

1.) Date of Issuance

The Final Order must be mailed by certified mail (return receipt requested) or hand delivered to the applicant. A copy also must be mailed or hand delivered at the same time to the appropriate Conservation Commission, appellant and the property owner, if different from the applicant.

Issued by the Massachusetts Department of Environmental Protection:

Signature:

Kenneth Kimmell, Commissioner

5/30/12

Date

This Order is issued to the applicant as follows:

☐ by hand delivery on

☒ by certified mail, return receipt requested, on

CERTIFIED MAIL Date May 30, 2012 #7003 3110 0001 6101 6905 ~~Date~~

G. Recording Information

This Order of Conditions must be recorded in the Registry of Deeds or the Land Court for the district in which the land is located, within the chain of title of the affected property. In the case of recorded land, the Final Order shall also be noted in the Registry's Grantor Index under the name of the owner of the land subject to the Order. In the case of registered land, this Order shall also be noted on the Land Court Certificate of Title of the owner of the land subject to the Order of Conditions. The recording information on this page shall be submitted to MassDEP listed below.

Regional Office of the Massachusetts Department of Environmental Protection

Detach on dotted line, have stamped by the Registry of Deeds and submit to MassDEP.

To:

Northeast Regional Office
Regional Office of the Department of Environmental Protection

Please be advised that the Order of Conditions for the Project at:

Town Brook, Quincy Center — Project Location
59-1261 — MassDEP File Number

Has been recorded at the Registry of Deeds of:

Norfolk — County
Book
Page

for:

Property Owner

and has been noted in the chain of title of the affected property in:

Book
Page

In accordance with the Order of Conditions issued on:

Date

If recorded land, the instrument number identifying this transaction is:

Instrument Number

If registered land, the document number identifying this transaction is:

Document Number

Signature of Applicant

Appendix B

Massachusetts Department of Environmental Protection
Water Quality Certification – Town Brook Realignment
DEP Transmittal #X239696

MassDEP
Commonwealth of Massachusetts
Executive Office of Energy & Environmental Affairs

Department of Environmental Protection

Northeast Regional Office • 205B Lowell Street, Wilmington MA 01887 • 978-694-3200

DEVAL L. PATRICK
Governor

TIMOTHY P. MURRAY
Lieutenant Governor

RICHARD K. SULLIVAN JR.
Secretary

KENNETH L. KIMMELL
Commissioner

August 31, 2012

Dennis Harrington, Planning Director
City of Quincy
1305 Hancock Street
Quincy, MA 02169

Re: **Water Quality Certification – Town Brook Realignment**
BRP WW10, Major project certification

At: Town Brook through Quincy Center

DEP File #59-1261
DEP Transmittal #X239696
United States Army Corps of Engineers (USACOE) Permit # NAE-2010-1986

Dear Mr. Harrington:

The Massachusetts Department of Environmental Protection (MassDEP) has completed its review of your application for Water Quality Certification, as referenced above. In accordance with the provisions of MGL c.21, §§ 26-53 and Section 401 of the Federal Clean Water Act as amended (33 U.S.C. §1251 et seq.), it has been determined there is reasonable assurance the project or activity will be conducted in a manner which will not violate applicable water quality standards. A site visit for the project [see: 314 CMR 9.05 (4)] was conducted by MassDEP staff on September 11, 2011 and April 27, 2012 as part of a regulatory agency field inspection of the site.

The proposed project is for the realignment of Town Brook. Extensive historic alteration of Town Brook has resulted in the placement of the majority of the brook in culverts through the City. This project proposes to realign 1700 linear feet of the culverted river from Quincy Center to a new location paralleling a new concourse as part of the Quincy Center Urban Revitalization District Plan. This project is one of three Core Public Improvement projects that the City of Quincy is undertaking to upgrade the aged infrastructure within Quincy Center in order to facilitate redevelopment. The proposed new alignment will consist of 1200 linear feet of channel of which approximately 264 linear feet will be open channel.

This information is available in alternate format. Call Michelle Waters-Ekanem, Diversity Director, at 617-292-5751. TDD# 1-866-539-7622 or 1-617-574-6868
MassDEP Website: www.mass.gov/dep

Printed on Recycled Paper

The realignment of the brook will connect the proposed culvert to the existing culvert at a point upstream of Quincy Center. Flows will be conveyed from west to east along the south side of the Concourse Roadway which is currently under construction.

This application for Water Quality Certification proposes the filling of approximately 17,040 square feet of Waters of the United States, and specifically, Land Under Water. The regulations at 314 CMR 9.06(2) require mitigation for the permanent loss of this resource area.

Several features have been incorporated into the proposed project to provide mitigation. The realigned channel will provide approximately 171 linear feet of new open channel section. This open channel section will incorporate a low-flow channel with spawning substrate secured to the channel bottom. Additional linear footage of low-flow channel and spawning substrate is provided under Mechanic Street and both upgradient and downgradient of the open channel section. The low-flow channel is designed to achieve attraction velocities for smelt during low flows and includes resting pools to allow smelt to rest during spawning events. There will also be repairs to the existing channel bottom at the downstream limit of work to address an area of channel failure. This repair requires the replacement of the existing degraded channel walls and bottom with an eight-foot-wide monolithic reinforced concrete channel as an extension of the new channel section.

Wetland plantings are proposed within the open-channel section of Town Brook just upstream of the connection with the existing channel. The width of the channel in this location provides an opportunity to reduce velocities and create an "island" with an elevation just above base flow elevations. Approximately 500 square feet of wetland plantings are intended to mitigate temperatures within adjacent spawning riffles and resting pools.

Town Brook has been subject to significant diversion of flows as a result of local flood control projects, sedimentation and other development. The Deep Rock Tunnel Flood Control Project overflow diversion structure was constructed by the Army Corps of Engineers (ACOE) in 1998 to divert peak storm event flows so as to reduce localized flooding. During construction of this structure, the smelt run suffered acute impacts including egg mortality and spawning habitat loss. Subsequently, it was determined that the brook's base flows have decreased resulting in continuing chronic impacts to the smelt run due to sedimentation, algae accumulation, and reduced water depths and velocity. Maintaining appropriate base flows within Town Brook is a critical factor in sustaining the existing smelt habitat.

Accordingly, this Water Quality Certification, as well as the Final Order of Conditions for this project (DEP File #59-1261) requires that a draft Memorandum of Agreement be prepared between stakeholders and that flows to Town Brook be restored through one or more solutions described further in Conditions #19 through #22.

As mentioned previously, the Town Brook realignment project is one component of the Quincy Center Redevelopment project. Construction of stormwater infrastructure is part of this redevelopment project. The draft Environmental Impact Report (DEIR) for the New Quincy Center Redevelopment project includes a preliminary design that consolidates many of the existing outfalls in the former Town Brook alignment into a single discharge outfall at Revere Road, adjacent to the existing smelt spawning area. Groundwater flow from the existing MBTA Lift Station will also be directed to this discharge outfall. This lift station contributes a significant flow of approximately 1 cubic foot per second several times a day to Town Brook and effectively doubles the brook's base flows during low flow periods.

Though the stormwater improvements for the redevelopment project have not been included in the Water Quality Certification application for the realignment project, they may have an effect on Waters of the United States. Consequently, this Certification requires that plans be evaluated which introduce the MBTA Lift Station flows further upstream into the realigned section of Town Brook. This requirement is compatible with the recommendations of the DEIR Certificate issued by the Secretary of Energy and Environmental Affairs on June 22, 2012.

An alternatives analysis has been done in accordance with 314 CMR 9.00. Seven alternative brook alignments (A through G) were evaluated in the Water Quality Certification application. In addition, a no-build alternative and an alternative to re-build the culvert along its current alignment were also evaluated. In order to determine the preferred alternative, the nine alternatives were evaluated using ten metrics: flood control, cost, underground conflicts, property constraints, enhanced smelt fisheries habitat, construction schedule and phasing, environmental enhancements, code compliance, consistency with the Urban Revitalization District Plan, and open channel/public amenity. The preferred alignment was determined through this evaluation process.

The regulations at 314 CMR 9.06, require that: "No discharge of dredged or fill material shall be permitted unless appropriate and practicable steps have been taken which will minimize potential adverse impacts to the bordering or isolated vegetated wetlands or land under water, including a minimum of 1:1 restoration or replication of bordering or isolated vegetated wetlands. Minimization and mitigation of adverse impacts shall be required for the selected alternative and the ability to minimize and mitigate impacts may be a factor in the evaluation of alternatives." Mitigation of adverse impacts for this project will occur via implementation of the mitigation plan and narrative referenced in the special conditions. No comment letters were received during the public comment period.

The Criteria for Evaluating Proposed Discharge to Wetlands of the Regulations for the Water Quality Certification Program (the Regulations) require the submittal of information necessary for MassDEP to determine that the project complies with the Wetland Protection Act, minimizes individual and cumulative impacts, and complies with the Massachusetts Surface Water Quality Standards. This information has been provided and specific mitigating measures required by the Department are itemized below. Therefore, based upon information currently in the record, MassDEP grants a Water Quality Certification subject to the following conditions to maintain water quality, to minimize impact on the waters and wetlands, and to ensure compliance with appropriate state law.

1. This project could result in a violation of MassDEP's Water Quality Standards, 314 CMR 4.00. Therefore, reasonable care and diligence shall be taken to assure that the proposed activity will not violate Class B standards.

2. All activity shall conform to the following plans and documents:

    a. Application for Water Quality Certificate dated September 23, 2011, which includes: (i.) Transmittal Form #X239696, and (ii.) Notice of Intent and accompanying narrative filed with the Quincy Conservation Commission for DEP File #59-1269.

b. Plans entitled: "Town Brook Enhancement Project, Notice of Intent, Quincy, MA." 26 sheets. Prepared by Stephenson Design Group, LLC, and stamped by Karlis Skulte, P.E. #47765. Final revision date: July 27, 2011. Scale: as shown.

c. Plan entitled: "Channel Repair Plan Downstream Connection Point." One sheet. Prepared by Stephenson Design Group, LLC, and stamped by Karlis Skulte, P.E. #47765. Dated July 13, 2012.

d. Plan entitled: "Alternate Work Plan." One Sheet. Prepared by Stephenson Design Group, LLC, and dated October 27, 2011.

c. Document entitled: "Preliminary Design of Flow Restoration in Town Brook, Quincy MA." Prepared by Gomez & Sullivan Engineers, P.C. Final report dated March, 2011.

e. Document entitled: "Request for Information, Town Brook Enhancement Project, DEP File #059-1261, Quincy, Massachusetts." 80 pages including attachments. Prepared by Stephenson Design Group, LLC. Dated November 21, 2011.

f. Document entitled: Memorandum of Agreement by the City of Quincy, Massachusetts Department of Conservation and Recreation, the Division of Marine Fisheries and Street-Works Development, LLC for the Recapture of Base Stream Flows Within Town Brook including Exhibits A, B & C.

Pre-Construction:

3. All activity shall conform to the requirements set forth in the Final Order of Conditions issued by MassDEP on May 30, 2012, for DEP File #59-1269, unless otherwise specified herein.

4. The project proponent shall notify MassDEP and the Quincy Conservation Commission in writing, 48 hours before any activity commences on site.

5. Members and agents of MassDEP and the Quincy Conservation Commission shall have the right to enter and inspect the premises to evaluate compliance with the conditions stated in this Water Quality Certification. The project proponent shall submit any data MassDEP deems necessary for that evaluation.

6. Erosion controls shall be placed on site between areas of proposed work and resource areas. Haybales and/or silt fence must be staked. Silt fencing must be entrenched. Alternative types of barriers (such as straw, coir, or Filter mitt) may be used with prior approval from MassDEP.

7. An adequate stockpile of erosion control materials shall be on site at all times for emergency or routine replacement and shall include materials to repair or replace silt fences, hay bales, stone riprap filter berms, or any other devices planned for use during construction.

8. The applicant shall employ an Environmental Monitor certified in Massachusetts as a Professional Engineer and with experience in stream construction techniques. This monitor will ensure that all work relating to placement of the geo-textile materials and construction of the low-flow channel, modified channel, resting areas, riffles, and bordering vegetated wetland

island are constructed as designed and shall be given the authority to stop work in the event of non-compliance with this Water Quality Certification.

9. The Environmental Monitor shall report directly to MassDEP and the Division of Marine Fisheries (DMF) on a bi-weekly basis. The name and address of this Monitor shall be provided to MassDEP and DMF prior to the start of work.

10. **Prior to the commencement of construction,** there shall be a pre-construction meeting between the project supervisor, the contractor responsible for the work, a member of the Quincy Conservation Commission or its Administrator, the Environmental Monitor and representatives of MassDEP and DMF to ensure that the requirements of this Water Quality Certification are understood. Arrangements for the pre-construction meeting shall be made at least two weeks prior to any activity within jurisdictional areas.

11. **Prior to the commencement of construction,** a plan with narrative shall be prepared describing the method for placing stone within both the cast-in-place and pre-cast sections of culvert. Written approval from MassDEP is required prior to construction.

12. **Prior to the commencement of construction,** a dewatering plan shall be prepared and submitted to MassDEP for review and approval. Written approval from MassDEP is required prior to construction.

13. **Prior to installation of the low-flow channel,** the applicant shall schedule a site inspection with MassDEP and DMF. The purpose of this inspection is to confirm channel elevations and slope with the Environmental Monitor at the transition area between the proposed project and the existing channel to ensure that the slope in this area is suitable for smelt migration and is compatible with the upstream design slope.

14. All plans, reports, and information referenced in this Water Quality Certification shall be provided to MassDEP and the Quincy Conservation Commission simultaneously.

Project Specific:

15. Unless otherwise allowed by DMF, there shall be no construction that results in a discharge of waters to the existing Town Brook smelt run between March 1st and May 31st.

16. The downstream connection point shall be constructed prior to the upstream tie-in point becoming functional. The upstream connection point shall be constructed after the approximately 1200 linear feet of new culvert and low-flow channel are completed.

17. The embedded material proposed within the culvert shall be set flush to the existing grade of the stream channel bottom at both the culvert outlet, such that there will be no physical barrier to fish passage.

18. Construction of the proposed project incorporating the elevated wall along Parcel D90 (Sheet C-4.3), and the "Alternate Work Plan" dated October 27, 2011, both prepared by Stephenson Design Group, may be implemented upon the written consent of the property owner of Parcel D90, upon an eminent domain taking, or as otherwise may be authorized in accordance with the

laws of the Commonwealth. When property considerations are finalized, notice shall be provided to MassDEP and DMF.

19. A preliminary Town Brook Flow Restoration Alternatives report shall be prepared by December 31, 2012, and submitted to MassDEP, the MA Department of Conservation and Recreation (DCR), and DMF for review and approval. Alternatives to be evaluated may include, without limitation, modification of the Crown Colony detention basin outlet structure and/or modifications to the Centre Street Culvert and Junction Structure, removal of sediment impeding flow downstream of this structure, and survey of the channel of Town Brook from the Centre Street diversion structure to the Lowes parking lot. All permit and approval applications necessary to construct and operate the flow restoration alternative(s) shall be filed prior to the completion of the construction of the realigned Town Brook channel.

20. The flow restoration alternative(s) described in the flow restoration report required by Condition #19 shall be constructed and operational prior to the diversion of Town Brook into the realigned channel.

21. If, despite the good faith efforts of the applicant, the flow restoration alternative(s) are not operational prior to the diversion of Town Brook, then interim flow augmentation, as detailed in the final executed Memorandum of Agreement adopted by the parties in accordance with Special Condition #37 of the Final Order of Conditions for DEP File #59-1269 shall be implemented for the 2013 smelt spawning season.

22. In the event that the results of the Monitoring Program set forth in Condition # 44 indicate that additional flow augmentation is required to improve habitat functions, and upon the written request of DMF and approvals by the DCR and ACOE, modification of the diversion weir, as described in the Gomez & Sullivan Report as the Centre Street Junction Gravity Option, shall be designed and constructed no later than 6 months from the date that all necessary approvals are obtained, including, but not limited to, approval of a request to modify this structure from the ACOE.

23. If modification of the diversion weir is required, as described in Condition #22, then, within 30 days from receiving notice from MassDEP, the applicant, in conjunction with the necessary state agencies, shall be obligated to enter into a Memorandum of Agreement that will address the permitting, design construction operational, and financial responsibilities of the parties to complete the improvement described in Condition #22.

24. In the event that the applicant is not able to obtain the permits or approvals necessary to implement the flow restoration alternative(s) recommended by Condition #19 or modification of the diversion weir, if required, then the applicant shall notify MassDEP, DCR and DMF of its inability to secure said permits or approvals. MassDEP, in coordination with DCR and DMF, shall notify the applicant that a proposal for a non-structural alternative method of flow augmentation is required and shall establish timelines for submittal and implementation of this proposal to be submitted to MassDEP, DCR and DMF for review and approval.

25. Prior to the construction of stormwater infrastructure associated with the construction of the New Quincy Center Redevelopment Project, the applicant shall submit a water quality sampling protocol for review and approval by MassDEP and DMF for the purpose of determining whether

introduction of groundwater flow from the MBTA Lift Station can be tied into the realigned Town Brook without causing an adverse effect on the fish run and degradation of the smelt spawning substrate. If it is determined that the introduction of flow is approved, the applicant shall construct the tie-in as far upstream as practicable from the Revere Street outfall.

26. Plans showing the Revere Street discharge shall be submitted to MassDEP for review and approval prior to the construction of stormwater infrastructure associated with the construction of the New Quincy Center Redevelopment Project. Plans shall evaluate incorporation of velocity dissipation at the outfall.

27. Maintenance of sediments from those locations identified in the Site Inspection Report referenced in the Memorandum of Agreement shall be undertaken annually and documented in the Town Brook maintenance logbook, in accordance with the Memorandum of Agreement.

28. A permanent mark shall be placed on the Center Street outlet headwall at the same elevation as the overflow trough wall. This mark indicates that, if water at the outlet is above this mark, then water is bypassing Town Brook and maintenance of sediments shall be performed in accordance with the Memorandum of Agreement.

29. A submittal of a Letter of Map Revision (LOMR) application shall be made to the Federal Emergency Management Agency (FEMA) by the City of Quincy with a copy to MassDEP, notifying FEMA of the proposed change in the location of Town Brook culvert and channel and, if applicable, any change in the extent of flooding during the 100-year flood event, or any change to the floodway. Application shall be made within four months of the discharge of flows within the new alignment.

30. If oil and/or hazardous materials (OHM) are identified during implementation of the project (including excavation, removal and/or disposal of contaminated soil, pumping/dewatering of contaminated groundwater, or working in contaminated media), notification pursuant to the MA Contingency Plan (310 CMR 40.0000) must be made to MassDEP. A Licensed Site Professional (LSP) shall be retained to determine if notification is required and, if need be, render appropriate opinions. Construction protocols and procedures should reflect the potential for discovery of OHM during the construction period and appropriate tests should be conducted, prior and during construction, for known or suspected contamination.

31. Illicit channel connections, including, but not limited to, those between Station17+00 and 18+00, shall be eliminated in accordance with 314 CMR 9.06(6)(a)(10).

32. To further improve the exclusion of fish from the decommissioned channel and following review of monitoring results, DMF may recommend modifications to the weir/baffle design, which shall be incorporated within the final plans to be submitted to MassDEP and DMF for review and approval.

33. Final plans regarding the bordering vegetated wetland plantings and enhanced shade tree plantings to the maximum extent practicable accounting for growth criteria and other relevant considerations shall be submitted to MassDEP for review and approval prior to construction. There shall be no work until approval is received in writing from MassDEP.

34. As stated in the 401 Water Quality Certification Application, the applicant shall prepare a Town Brook Watershed Master Plan addressing Quincy Center and surrounding neighborhoods adjacent to Town Brook and will coordinate this Master Plan with the developer of the Urban Revitalization District.

Stormwater:

35. The 12 existing point-source discharges shall be retrofitted with catch basin inserts as described in Attachment 1 of the November 21, 2011 Response to Request for Information cited in Condition #2 of this document.

36. Maintenance of these inserts shall be in accordance with the "Sample Maintenance Agreement" included in Attachment 1 of the November 21, 2011 Response to Request for Information cited in Condition #2 of this document.

37. As part of the comprehensive stormwater management program currently under development in connection with the Quincy Center Redevelopment Project, any Best Management Practices (BMPs) implemented within the Concourse Roadway and/or project area as approved as part of the FOC may be upgraded or replaced by new BMPs provided that there are similar or equivalent TSS removal rates.

38. The Comprehensive Stormwater Management Plan for the Quincy Center Redevelopment Project must comply with the MA Stormwater Standards for all discharges to the existing or proposed Town Brook channel. This includes discharges through existing pipe outlets and new pipe outlets installed as part to the Town Brook Enhancement Project and the Concourse Roadway Improvement Project.

39. Stormwater generated from the Quincy Center Redevelopment Project shall comply with the MA Stormwater Standards and shall be directed to Town Brook.

Monitoring:

40. A permanent staff gage shall be installed at the inside of the stream bend to assist in monitoring sediment accumulation. A gage or benchmark shall be placed along the outside of the stream bend to assist in monitoring for scour. The staff gage(s) should be installed so as to be visible from street level.

41. The bordering vegetated wetland (BVW) island shall be monitored by the Environmental Monitor or qualified designee for success of plantings as well as for scour or deposition of materials, including both sediments and debris. Failed plantings shall be replaced with similar species as approved by MassDEP. A monitoring report shall be submitted to MassDEP at the beginning and end of each growing season for three years and shall include recommendations for replacement, as required.

42. The applicant shall submit a proposal for a smelt monitoring study to DMF for review and approval. The study shall include three years of monitoring and shall incorporate 2-3 site visits per week between March 1st and May 31st of each monitoring year. The proposal shall include: (1) documentation of the spatial and temporal distribution of smelt eggs, (2)

sediment accumulation, water depth, and velocity shall be measured at each inspection at the daylighted spawning riffles, resting pools, and at the stream bend, and (3) water quality (including dissolved oxygen and temperature) and effectiveness of the fish exclusion barrier shall be monitored.

43. The applicant shall submit a channel monitoring plan in order to identify the development of any scour pools, perched conditions, invert drops or any other obstructions to fish passage, especially at the transition between the new section of channel and the existing channel just south of Revere Road. If any obstructions to fish passage are observed, a remedial action plan shall be submitted to MassDEP and DMF within 30 days of the identification of the obstruction that will avoid or reduce impacts to fish movement.

44. The applicant shall submit a remedial action proposal in the event that DMF concludes that the channel's design specifications are not met and, as a result, significant smelt egg or adult mortality results. This remedial action proposal shall be submitted to MassDEP and DMF for review and approval within the time set forth in the notice to the applicant that a remedial action plan is required.

45. The structural integrity and capacity of the banks, including the wall on Parcel 90, and channel of both the realigned portion of Town Brook and the downstream portion of the brook within the project area, being intergral to protection of flood control, storm damage prevention and protection of fisheries, shall be maintained. This shall include, but is not limited to, maintenance of the channel bottom to address sedimentation, preservation of the spawning substrate, and prevention of any conditions that may serve as an obstruction to fish passage as long as the fish continue to return to Town Brook.. In addition, all vegetative plantings shall be maintained. This on-going condition shall be included in any Certificate of Compliance and shall not expire with the issuance of a Certificate of Compliance.

46. The applicant shall have an on-going responsibility to operate and maintain the approved flow augmentation alternatives consistent with their design in order to ensure protection of the fish run and spawning habitat.

Other:

47. An operation-and-maintenance (O&M) program shall be implemented as outlined in Appendix F of the 401 Water Quality Certification application.

48. This O&M program shall reflect that removal of sediments from the channel will require prior consultation with MassDEP and DMF and shall specify equipment to be used for removal of accumulated sediments.

49. At no time during or after construction shall fill or other materials be placed, slump or fall into Waters of the United States. The applicant shall be responsible for inspecting and maintaining all slopes and shall immediately notify the MassDEP if slumping, erosion or encroachment occurs.

50. During work on this project, there shall be no discharge or spillage of fuel, oil or other pollutants, including sediments, onto any part of the site. The applicant shall take all reasonable precautions to prevent the release of pollutants by ignorance, accident or vandalism.

51. A copy of the final Construction Storm Water Pollution Plan (SWPPP) shall be submitted to MassDEP and the Quincy Conservation Commission prior to construction.

52. The developer or contractor responsible for the project's completion shall be notified of, and understand, the requirements of this Water Quality Certification. A copy of this Order shall be kept on-site while activities regulated by this Order are being performed.

53. If any unforeseen problems occur during construction, upon discovery, the applicant shall immediately notify MassDEP and a meeting shall be held to determine the corrective measures to be employed. The applicant shall then act to correct the problem using the corrective measures agreed upon.

54. Upon stabilization of the site, all erosion controls shall be removed.

55. This Certification remains in effect for the same duration of the federal permit .

56. In the event that an appeal is filed, no activity may begin until a final decision is issued by MassDEP.

Failure to comply with this certification is grounds for enforcement, including civil and criminal penalties, under MGL c.21 §42, MGL c.21A §16, or other possible actions/penalties as authorized by the General Laws of the Commonwealth.

This Certification does not relieve the applicant of the obligation to comply with other appropriate state or federal statutes or regulations. This includes, but is not limited to, conditions of the individual permit from the U.S. Department of the Army.

Should you have any questions regarding this WQC, please contact Ms. Heidi Davis at (978) 694-3255.

Very truly yours,

Eric Worrall, Deputy Regional Director
Bureau of Resource Protection

Cc: Quincy Conservation Commission, 55 Sea Street, Quincy MA 02169

Dennis Harrington, Planning Director, City of Quincy, 1305 Hancock Street, Quincy MA 02169

Peter Tamm, Goulston & Storrs, 400 Atlantic Avenue, Boston MA 02110-3333

Karlis Skulte, Stephenson Design Group, LLC, 51 Sleeper Street, Suite 600, Boston MA 02210

Brad Chase, MA Division of Marine Fisheries, 1213 Purchase Street, 3rd Fl., New Bedford MA 02740

Kevin Kotelly, USACOE, 696 Virginia Road, Concord, MA 01742-2751

Paul DiPietro, MA Department of Conservation & Recreation, 251 Causeway Street, Suite 600 Boston MA 02114

Notice of Appeal rights

A) Appeal Rights and Time Limits

Certain persons shall have a right to request an adjudicatory hearing concerning certifications by the MassDEP when an application is required: (a) the applicant or property owner; (b) any person aggrieved by the decision who has submitted written comments during the public comment period; any ten (10) persons of the Commonwealth pursuant to M.G.L. c. 30A where a group member has submitted written comments during the public comment period; or (c) any governmental body or private organization with a mandate to protect the environment which has submitted written comments during the public comment period. Any person aggrieved, any ten (10) persons of the Commonwealth, or a governmental body or private organization with a mandate to protect the environment may appeal without having submitted written comments during the public comment period only when the claim is based on new substantive issues arising from material changes to the scope or impact of the activity and not apparent at the time of public notice. To request an adjudicatory hearing pursuant to M.G.L. chapter 30A section 10, a Notice of Claim must be made in writing provided that the request is made by certified mail or hand delivery to the MassDEP, with the appropriate filing fee specified within 310 CMR 4.10 along with a MassDEP Fee Transmittal Form within twenty-one (21) days from the date of issuance of this Certificate, and addressed to:

Case Administrator
Dept of Environmental Protection
One Winter Street- 2nd Floor
Boston, MA 02108

A copy of the request shall at the same time be sent by certified mail or hand delivery to the issuing office of the Wetlands and Waterways Program at:

MassDEP, Northeast Regional Office
205B Lowell Street
Wilmington, MA 01887

B) Contents of Hearing Request

A Notice of Claim for Adjudicatory Hearing shall comply with the MassDEP's Rules for Adjudicatory Proceedings, 310 CMR 1.01 (6), and shall contain the following information pursuant to 314 CMR 9.10(3):

a. the 401 Certification Transmittal Number and MassDEP Wetlands Protection Act File Number;
b. the complete name of the applicant and address of the project;
c. the complete name, address, and fax and telephone numbers of the party filing the request, and, if represented by counsel or other representative, the name, fax, and telephone number of the attorney;
d. if claiming to be a party aggrieved, the specific facts that demonstrate that the party satisfies the definition of "aggrieved person" found at 314 CMR 9.02;
e. a clear and concise statement that an adjudicatory hearing is being requested;
f. a clear and concise statement of (1) the facts which are grounds for the proceedings, (2) the objections to the Certificate, including specifically the manner in which it is alleged to be inconsistent with the MassDEP's Water Quality Regulations, 314 CMR 9.00, and (3) the relief

sought through the adjudicatory hearing, including specifically the changes desired in the final written Certification, and

g. a statement that a copy of the request has been sent by certified mail or hand delivery to the applicant, the owner (if different from the applicant), the conservation commission of the city or town where the activity will occur, the Department of Conservation and Recreation (when the certificate concerns projects in Areas of Critical Environmental Concern), the public or private water supplier where the project is located (when the certificate concerns projects in Outstanding Resource Waters), and any other entity with responsibility for the resource where the project is located.

C) Filing Fee and Address

The hearing request along with a MassDEP Fee Transmittal Form and a valid check or money order payable to the Commonwealth of Massachusetts in the amount of one hundred dollars ($100) must be mailed to:

Commonwealth of Massachusetts
Department of Environmental Protection
Commonwealth Master Lockbox
P.O. Box 4062
Boston, MA 02211

The request will be dismissed if the filing fee is not paid, unless the applicant is exempt or granted a waiver. The filing fee is not required if the appellant is a city or town (or municipal agency), county, or district of the Commonwealth of Massachusetts, or a municipal housing authority. The MassDEP may waive the adjudicatory hearing filing fee pursuant to 310 CMR 4.06 (2) for a person who shows that paying the fee will create an undue financial hardship. A person seeking a waiver must file an affidavit setting forth the facts believed to support the claim of undue financial hardship together with the hearing request as provided above.

Site Plans
for
Town Brook Base Flow Recapture Improvements
Centre Street - Quincy, MA

Issued For: Bidding
Date Issued: May 6, 2013
Latest Issue: May 6, 2013

SHEET INDEX

EBI Consulting Drawings

SHEET NO.	SHEET TITLE	LATEST ISSUE
C-1	Title Sheet	5/6/2013
C-2	Legend & General Notes	5/6/2013
C-3	Existing Overall Site Plan & Key Map	5/6/2013
C-4.1	Proposed Improvements Crown Colony Stormwater Detention Basin	5/6/2013
C-4.2	Proposed Improvements Centre Street (North)	5/6/2013
C-4.3	Proposed Improvements Centre Street (South)	5/6/2013
C-5.1	Details 1	5/6/2013
C-5.2	Details 2	5/6/2013
C-5.3	Details 3	5/6/2013
C-5.4	Details 4	5/6/2013

Amolins Structural Consultants Drawings

SHEET NO.	SHEET TITLE	LATEST ISSUE
S-1	Drainage Pipe Plan, Section & Notes	4/25/2013

Reference Drawings

SHEET NO.	SHEET TITLE	LATEST ISSUE
1 to 4	Existing Conditions	4/2/2013

Dig Safe Systems, Inc.
1-888-DIG-SAFE
(1-888-344-7233)

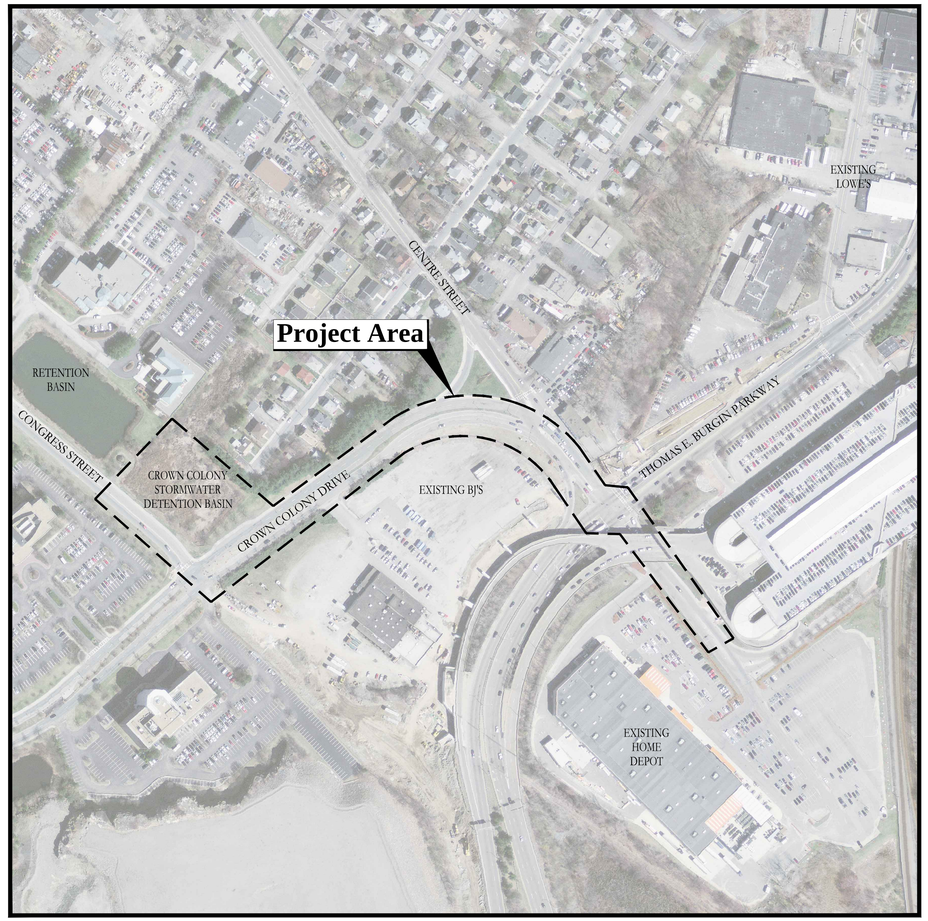

LOCUS MAP

Source: MassGIS

PROPERTY INFORMATION

OWNER (1)
City of Quincy
1305 Hancock Street
Quincy, MA 02169
Tel: (617) 376-1362
Fax: (617) 376-1097

OWNER (2)
Flatley John J Etal Trees
Crown Colony
Nominee Trust
C/O The Flatley Company
P.O. Box 850168 Attn: Carol Shan
Braintree, MA 02168-0185
Tel: (781) 380-7731

OWNER (3)
HD Development of Maryland Inc.
Property Tax Dept. 2608
P.O. Box 105842
Atlanta, GA 30348
Tel: (770) 433-8211

OWNER (4)
Penn Street, LLC
C/O Lowes Home Ctrs
P.O. Box 1000
Tax Dept. NB3TA
Mooresville, NC 28115

ASSESSOR'S INFORMATION
1. City of Quincy Right-of-Way
2. Map 4033, Lot 37-5A
3. Map 3092B, Lot 12-1
4. Map 3089, Lot 18-A

APPLICANT
City of Quincy
1305 Hancock Street
Quincy, MA 02169
Tel: (617) 376-1362
Fax: (617) 376-1097

PROJECT TEAM

CIVIL ENGINEER
EBI Consulting
environmental | engineering | due diligence
21 B Street | Burlington, MA 01803
Tel: 781.273.2500 | Fax: 781.273.3311
www.ebiconsulting.com

STRUCTURAL ENGINEER
Amolins Structural Consultants
1200 Providence Highway
Sharon, MA 02067
Tel: (781) 793-9933

SURVEYOR
Thompson Farland
398 County Street
New Bedford, MA 02740
Tel: (508) 717-3479

ENVIRONMENTAL SCIENTIST
Lucas Environmental, LLC
67 Coddington Street, Suite 204
Quincy, MA 02169
Tel: (617) 405-4140

EBI Consulting
environmental | engineering | due diligence
21 B Street | Burlington, MA 01803
Tel: 781.273.2500 | Fax: 781.273.3311
www.ebiconsulting.com

COMMONWEALTH OF MASSACHUSETTS
KARLIS SKULTE
CIVIL
No. 47703
REGISTERED PROFESSIONAL ENGINEER
5/6/2013

PREPARED FOR:
City of Quincy
1305 Hancock Street
Quincy, MA 02169
Tel: (617) 376-1362
Fax: (617) 376-1097

THIS DOCUMENT IS THE DESIGN PROPERTY AND COPYRIGHT OF EBI CONSULTING, INC. AND FOR THE EXCLUSIVE USE BY THE TITLE CLIENT. ANY DUPLICATION OR USE WITHOUT EXPRESS WRITTEN CONSENT OF THE CREATOR IS STRICTLY PROHIBITED.

DRAWING SCALES NOTED ARE FOR 22" x 34" SIZE PRINTED MEDIA ONLY. ALL OTHER PRINTED SIZES ARE DEEMED "NOT TO SCALE".

SUBMITTALS

NO.	DATE	DESCRIPTION	BY

DATE: May 6, 2013
PROJECT NUMBER: 16120008

PROJECT TITLE:
Town Brook Base Flow Recapture Improvements
Centre Street
Quincy, Massachusetts 02169
Norfolk County

ISSUED FOR: Bidding

SHEET TITLE: Title Sheet

SCALE: AS NOTED
DESIGNED BY: MVG | JVC
CHECKED BY: KPS | BKF

SHEET NO: C-1

LEGEND

General

- PROPERTY LINE
- RIGHT-OF-WAY
- INTERNAL LOT LINE
- ABUTTING PROPERTY LINE
- EASEMENT
- BLSF — BORDERING LAND SUBJECT TO FLOODING
- MAHW/OHW
- WETLAND BOUNDARY
- 100'RA — 100' RIVERFRONT AREA
- 200'RA — 200' RIVERFRONT AREA
- 100'BZ — 100' WETLAND BUFFER ZONE
- NDZ — NO DISTURB ZONE
- LIMIT OF DISTURBANCE
- BL 10 EL=98.5 — BORING LOCATION
- MW 2 EL=100.5 — MONITORING WELL
- TP 5 EL=112.7 — TEST PIT LOCATION
- MATCHLINE

Layout and Materials

- 100'–6" — BUILDING
- EN — BUILDING ENTRANCE
- LD — LOADING DOCK
- BUILDING SETBACK
- 50+00 — BASELINE
- LIMIT OF WORK
- SAWCUT LINE
- GRAVEL ROAD
- EOP — EDGE OF PAVEMENT
- VGC — VERTICAL GRANITE CURB
- VGC PCC — LIMIT OF CURB TYPE
- VGC — CONCRETE SIDEWALK
- VGC — PAVER SIDEWALK
- LANDSCAPE BUFFER
- PARKING SETBACK
- 50 — TOTAL PARKING COUNT
- 20 — STANDARD STALL COUNT
- C10 — COMPACT STALL COUNT
- ACCESSIBLE PARKING
- VAN — VAN ACCESSIBLE PARKING
- ACCESSIBLE CURB RAMP
- WHEEL STOP
- SIGN
- BOLLARD
- SITE LIGHT POLE
- UTILITY POLE
- GUY POLE
- OHW — OVERHEAD WIRE
- RETAINING WALL
- STONE WALL
- BARB WIRE FENCE
- CHAIN LINK FENCE
- CONSTRUCTION FENCE
- STOCKADE FENCE
- STEEL GUARDRAIL
- WOOD GUARDRAIL
- PATH
- TREE LINE

Erosion Control

- EROSION CONTROL BARRIER
- STRAW BALES
- STABILIZED CONSTRUCTION EXIT
- SILT SACK SEDIMENT TRAP

Grading

- 10 — MAJOR CONTOUR
- 1 — MINOR CONTOUR
- 100.5 TC × 100.0 BC — SPOT ELEVATION
- DETENTION BASIN
- SWALE
- BIORETENTION AREA
- 100-YEAR FLOOD ELEVATION
- 10-YEAR FLOOD ELEVATION

Drainage

- 12"RCP — DRAIN
- 6"HDPE — ROOF DRAIN
- 6"PVC — UNDER DRAIN
- SINGLE CATCH BASIN
- DOUBLE CATCH BASIN
- DRAIN MANHOLE
- CO — CLEANOUT
- FLARED END SECTION
- HEADWALL
- RIPRAP

Utilities

- 6"S — SEWER
- FM — FORCE MAIN
- SEWER MANHOLE
- PLUG OR CAP
- 6"W — WATER
- 2"DW — DOMESTIC WATER
- 6"FP — FIRE PROTECTION
- CS — CURB STOP AND BOX
- HYD — FIRE HYDRANT
- PIV — POST INDICATOR VALVE
- 8"W 6"W — REDUCER
- SHUT-OFF VALVE
- SIAMESE CONNECTION
- TSV — TAPPING SLEEVE AND VALVE
- WV — WATER VALVE AND BOX
- WM — WATER METER
- G — GAS
- GG — GAS GATE
- GM — GAS METER
- UGE — UNDERGROUND ELECTRIC
- EMH — ELECTRIC MANHOLE
- EM — ELECTRIC METER
- TRANSFORMER PAD
- UGT — UNDERGROUND TELEPHONE
- TMH — TELEPHONE MANHOLE
- CATV — CABLE TV
- FO — FIBER OPTICS
- CONDUIT
- HH — HAND HOLE
- PB — PULL BOX

ABBREVIATIONS

General

ACR	ACCESSIBLE CURB RAMP
ADA	AMERICANS WITH DISABILITIES ACT
APPROX	APPROXIMATE
ARCH	ARCHITECTURAL
BC	BOTTOM OF CURB
BCB	BITUMINOUS CONCRETE BERM
BCC	BITUMINOUS CONCRETE CURB
BIT	BITUMINOUS
BLDG	BUILDING
BLSF	BORDERING LAND SUBJECT TO FLOODING
BOT	BOTTOM
BC	BOTTOM OF CURB
BS	BOTTOM OF SLOPE
BW	BOTTOM OF WALL
BWLL	BROKEN WHITE LANE LINE
CLF	CHAIN LINK FENCE
CONC	CONCRETE
DPW	DEPARTMENT OF PUBLIC WORKS
DYCL	DOUBLE YELLOW CENTER LINE
ECC	EXTRUDED CONCRETE CURB
ELEV	ELEVATION
EOP	EDGE OF PAVEMENT
EX	EXISTING
EXIST	EXISTING
FDN	FOUNDATION
FFE	FIRST FLOOR ELEVATION
FG	FINISHED GRADE
GRAN	GRANITE
GTD	GRADE TO DRAIN
HP	HIGH POINT
LA	LANDSCAPE AREA
LOD	LIMIT OF DISTURBANCE
LOW	LIMIT OF WORK
LP	LOW POINT
MAHW	MEAN ANNUAL HIGH WATER
MAX	MAXIMUM
MCC	MONOLITHIC CONCRETE CURB
MIN	MINIMUM
NDZ	NO DISTURB ZONE
NIC	NOT IN CONTRACT
NTS	NOT TO SCALE
OHW	ORDINARY HIGH WATER
PCC	PRECAST CONCRETE CURB
PL	PROPERTY LINE
PROP	PROPOSED
R	RADIUS
RA	RIVERFRONT AREA
REM	REMOVE
RET	RETAIN
ROW	RIGHT-OF-WAY
R&D	REMOVE AND DISPOSE
R&R	REMOVE AND RESET
SGE	SLOPED GRANITE EDGING
SWEL	SOLID WHITE EDGE LINE
SWLL	SOLID WHITE LANE LINE
TC	TOP OF CURB
TS	TOP OF SLOPE
TW	TOP OF WALL
TYP	TYPICAL
VGC	VERTICAL GRANITE CURB

Utilities

ABAN	ABANDON
ACCMP	ASPHALT COATED CORRUGATED METAL PIPE
ADJ	ADJUST
CATV	CABLE TV
CIP	CAST IRON PIPE
CMP	CORRUGATED METAL PIPE
CO	CLEANOUT
COND	CONDUIT
CS	CURB STOP AND BOX
DIA	DIAMETER
DCB	DOUBLE CATCH BASIN
DET	DETENTION
DIP	DUCTILE IRON PIPE
DMH	DRAIN MANHOLE
DW	DOMESTIC WATER
EMH	ELECTRIC MANHOLE
FA	FIRE ALARM
FES	FLARED END SECTION
FP	FIRE PROTECTION
FM	FORCE MAIN
FO	FIBER OPTICS
F&C	FRAME AND COVER
F&G	FRAME AND GRATE
GG	GAS GATE
GI	GUTTER INLET
GM	GAS METER
GT	GREASE TRAP
HDPE	HIGH DENSITY POLYETHYLENE PIPE
HH	HAND HOLE
HW	HEADWALL
HYD	HYDRANT
INF	INFILTRATION
INV	INVERT ELEVATION
I=	INVERT ELEVATION
MES	METAL END SECTION
MW	MONITORING WELL
OCS	OUTLET CONTROL STRUCTURE
OHW	OVERHEAD WIRE
PB	PULL BOX
PIV	POST INDICATOR VALVE
PVC	POLYVINYLCHLORIDE PIPE
RCP	REINFORCED CONCRETE PIPE
RD	ROOF DRAIN
R=	RIM ELEVATION
SAS	SOIL ABSORBTION SYSTEM
SCB	SINGLE CATCH BASIN
SLP	SITE LIGHT POLE
SMH	SEWER MANHOLE
SYS	SYSTEM
TMH	TELEPHONE MANHOLE
TSV	TAPPING SLEEVE, VALVE, AND BOX
UD	UNDERDRAIN
UG	UNDERGROUND
UP	UTILITY POLE
WM	WATER METER
WQI	WATER QUALITY INLET
WQS	WATER QUALITY STRUCTURE
WV	WATER VALVE AND BOX

GENERAL NOTES

General Information:

1. CONTRACTOR SHALL NOTIFY "DIG-SAFE" (1-888-344-7233) AT LEAST 72 HOURS BEFORE EXCAVATING.
2. CONTRACTOR SHALL BE RESPONSIBLE FOR SITE SECURITY AND JOB SAFETY, CONSTRUCTION ACTIVITIES SHALL BE IN ACCORDANCE WITH OSHA STANDARDS AND LOCAL REQUIREMENTS.
3. ACCESSIBLE ROUTES, PARKING SPACES, RAMPS, SIDEWALKS, AND WALKWAYS SHALL BE CONSTRUCTED IN CONFORMANCE WITH THE FEDERAL AMERICANS WITH DISABILITIES ACT AND WITH STATE AND LOCAL LAWS AND REGULATIONS (WHICHEVER ARE MORE STRINGENT).
4. AREAS DISTURBED DURING CONSTRUCTION AND NOT RESTORED WITH IMPERVIOUS SURFACES (BUILDINGS, PAVEMENTS, WALKS, ETC.) SHALL RECEIVE 6 INCHES LOAM AND SEED.
5. WORK WITHIN THE LOCAL RIGHTS-OF-WAY SHALL CONFORM TO LOCAL MUNICIPAL STANDARDS. WORK WITHIN SITE RIGHTS-OF-WAY SHALL CONFORM TO THE LATEST EDITION OF THE STATE HIGHWAY DEPARTMENTS STANDARD SPECIFICATIONS FOR HIGHWAYS AND BRIDGES.
6. UPON AWARD OF CONTRACT, CONTRACTOR SHALL MAKE NECESSARY CONSTRUCTION NOTIFICATIONS AND APPLY FOR AND OBTAIN NECESSARY PERMITS, PAY FEES, AND POST BONDS ASSOCIATED WITH THE WORK INDICATED ON THE DRAWINGS, IN THE SPECIFICATIONS, AND IN THE CONTRACT DOCUMENTS. DO NOT CLOSE OR OBSTRUCT ROADWAYS, SIDEWALKS, AND FIRE HYDRANTS, WITHOUT APPROPRIATE PERMITS.
7. TRAFFIC SIGNAGE AND PAVEMENT MARKINGS SHALL CONFORM TO THE MANUAL OF UNIFORM TRAFFIC CONTROL DEVICES (M.U.T.C.D.).
8. AREAS OUTSIDE THE LIMITS OF PROPOSED WORK DISTURBED BY THE CONTRACTOR'S OPERATIONS SHALL BE RESTORED BY THE CONTRACTOR TO THEIR ORIGINAL CONDITION AT THE CONTRACTOR'S EXPENSE.
9. IN THE EVENT THAT SUSPECTED CONTAMINATED SOIL, GROUNDWATER, AND OTHER MEDIA ARE ENCOUNTERED DURING EXCAVATION AND CONSTRUCTION ACTIVITIES BASED ON VISUAL, OLFACTORY, OR OTHER EVIDENCE, THE CONTRACTOR SHALL STOP WORK IN THE VICINITY OF THE SUSPECT MATERIAL TO AVOID FURTHER SPREADING OF THE MATERIAL, AND SHALL NOTIFY THE OWNER IMMEDIATELY SO THAT THE APPROPRIATE TESTING AND SUBSEQUENT ACTION CAN BE TAKEN.
10. CONTRACTOR SHALL PREVENT DUST, SEDIMENT, AND DEBRIS FROM EXITING THE SITE AND SHALL BE RESPONSIBLE FOR CLEANUP, REPAIRS, AND CORRECTIVE ACTION IF SUCH OCCURS.
11. DAMAGE RESULTING FROM CONSTRUCTION LOADS SHALL BE REPAIRED BY THE CONTRACTOR AT NO ADDITIONAL COST TO THE OWNER.
12. CONTRACTOR SHALL CONTROL STORMWATER RUNOFF DURING CONSTRUCTION TO PREVENT ADVERSE IMPACTS TO OFF SITE AREAS, AND SHALL BE RESPONSIBLE TO REPAIR RESULTING DAMAGES, IF ANY, AT NO COST TO OWNER.

Layout and Materials:

1. DIMENSIONS ARE FROM THE FACE OF CURB, FACE OF BUILDING, FACE OF WALL, AND CENTER LINE OF PAVEMENT MARKINGS, UNLESS OTHERWISE NOTED.
2. CURBING SHALL BE PRECAST CONCRETE CURB (PCC) AND CURB RADII SHALL BE THREE FEET (3') WITHIN THE SITE, UNLESS OTHERWISE INDICATED ON THE SITE PLANS.
3. PROPOSED BOUNDS AND ANY EXISTING PROPERTY LINE MONUMENTATION DISTURBED DURING CONSTRUCTION SHALL BE SET OR REST BY A PROFESSIONAL LICENSED SURVEYOR.
4. SYMBOLS AND LEGENDS OF PROJECT FEATURES ARE GRAPHIC REPRESENTATIONS AND ARE NOT NECESSARILY SCALED TO THEIR ACTUAL DIMENSIONS OR LOCATIONS ON THE DRAWINGS, THE CONTRACTOR SHALL REFER TO THE DETAIL SHEET DIMENSIONS, MANUFACTURER'S LITERATURE, SHOP DRAWINGS AND FIELD MEASUREMENTS OF SUPPLIED PRODUCTS FOR LAYOUT OF THE PROJECT FEATURES.
5. CONTRACTOR SHALL NOT RELY SOLELY ON ELECTRONIC VERSIONS OF PLANS, SPECIFICATIONS, AND DATA FILES THAT ARE OBTAINED FROM THE DESIGNERS, BUT SHALL VERIFY LOCATION OF PROJECT FEATURES IN ACCORDANCE WITH THE PAPER COPIES OF THE PLANS AND SPECIFICATIONS THAT ARE SUPPLIED AS PART OF THE CONTRACT DOCUMENTS.

Utilities:

1. THE LOCATIONS, SIZES, AND TYPES OF EXISTING UTILITIES ARE SHOWN AS AN APPROXIMATE REPRESENTATION ONLY. THE OWNER OR IT'S REPRESENTATIVES HAVE NOT INDEPENDENTLY VERIFIED THIS INFORMATION AS SHOWN ON THE PLANS. THE UTILITY INFORMATION SHOWN DOES NOT GUARANTEE THE ACTUAL EXISTENCE, SERVICEABILITY, OR OTHER DATA CONCERNING THE UTILITIES, NOR DOES IT GUARANTEE AGAINST THE POSSIBILITY THAT ADDITIONAL UTILITIES MAY BE PRESENT THAT ARE NOT SHOWN ON THE PLANS. PRIOR TO ORDERING MATERIALS AND BEGINNING CONSTRUCTION, THE CONTRACTOR SHALL VERIFY AND DETERMINE THE EXACT LOCATIONS, SIZES, AND ELEVATIONS OF THE POINTS OF ALL CONNECTIONS TO EXISTING UTILITIES AND, SHALL CONFIRM THAT THERE ARE NO INTERFERENCES WITH EXISTING UTILITIES AND THE PROPOSED UTILITY ROUTES, INCLUDING ROUTES WITHIN THE PUBLIC RIGHTS OF WAY.
2. WHERE AN EXISTING UTILITY IS FOUND TO CONFLICT WITH THE PROPOSED WORK, OR EXISTING CONDITIONS DIFFER FORM THOSE SHOWN SUCH THAT THE WORK CANNOT BE COMPLETED AS INTENDED, THE LOCATION, ELEVATION, AND SIZE OF THE UTILITY SHALL BE ACCURATELY DETERMINED WITHOUT DELAY BY THE CONTRACTOR, AND THE INFORMATION FURNISHED IN WRITING TO THE OWNER'S REPRESENTATIVE FOR THE RESOLUTION OF THE CONFLICT AND CONTRACTOR'S FAILURE TO NOTIFY PRIOR TO PERFORMING ADDITIONAL WORK RELEASES OWNER FROM OBLIGATIONS FOR ADDITIONAL PAYMENTS WHICH OTHERWISE MAY BE WARRANTED TO RESOLVE THE CONFLICT.
3. CONTRACTOR SHALL MAKE ARRANGEMENTS FOR AND SHALL BE RESPONSIBLE FOR PAYING FEES FOR POLE RELOCATION AND FOR THE ALTERATION AND ADJUSTMENT OF GAS, ELECTRIC, TELEPHONE, FIRE ALARM, AND ANY OTHER PRIVATE UTILITIES, WHETHER WORK IS PERFORMED BY CONTRACTOR OR BY UTILITIES COMPANY.
4. UTILITY PIPE MATERIALS SHALL BE AS FOLLOWS, UNLESS OTHERWISE NOTED ON THE PLAN:
   A. STORM DRAINAGE PIPES SHALL BE REINFORCED CONCRETE PIPE (RCP)

Erosion Control:

1. PRIOR TO STARTING ANY OTHER WORK ON THE SITE, THE CONTRACTOR SHALL NOTIFY APPROPRIATE AGENCIES AND SHALL INSTALL EROSION CONTROL MEASURES AS SHOWN ON THE PLANS AND AS IDENTIFIED IN FEDERAL, STATE, AND LOCAL APPROVAL DOCUMENTS PERTAINING TO THIS PROJECT.
2. CONTRACTOR SHALL INSPECT AND MAINTAIN EROSION CONTROL MEASURES, AND REMOVE SEDIMENT THEREFROM ON A WEEKLY BASIS AND WITHIN TWELVE HOURS AFTER EACH STORM EVENT AND DISPOSE OF SEDIMENTS IN AN UPLAND AREA SUCH THAT THEY DO NOT ENCUMBER OTHER DRAINAGE STRUCTURES AND PROTECTED AREAS.
3. CONTRACTOR SHALL BE FULLY RESPONSIBLE TO CONTROL CONSTRUCTION SUCH THAT SEDIMENTATION SHALL NOT AFFECT REGULATORY PROTECTED AREAS, WHETHER SUCH SEDIMENTATION IS CAUSED BY WATER, WIND, OR DIRECT DEPOSIT.
4. CONTRACTOR SHALL PERFORM CONSTRUCTION SEQUENCING SUCH THAT EARTH MATERIALS ARE EXPOSED FOR A MINIMUM OF TIME BEFORE THEY ARE COVERED, SEEDED, OR OTHERWISE STABILIZED TO PREVENT EROSION.
5. UPON COMPLETION OF CONSTRUCTION AND ESTABLISHMENT OF PERMANENT GROUND COVER, CONTRACTOR SHALL REMOVE AND DISPOSE OF EROSION CONTROL MEASURES AND CLEAN SEDIMENT AND DEBRIS FROM ENTIRE DRAINAGE AND SEWER SYSTEMS.

Demolition:

1. CONTRACTOR SHALL REMOVE AND DISPOSE OF EXISTING MANMADE SURFACE FEATURES WITHIN THE LIMIT OF WORK INCLUDING BUILDINGS, STRUCTURES, PAVEMENTS, SLABS, CURBING, FENCES, UTILITY POLES, SIGNS ETC. UNLESS INDICATED OTHERWISE ON THE DRAWINGS, REMOVE AND DISPOSE OF EXISTING UTILITIES, FOUNDATIONS AND UNSUITABLE MATERIAL BENEATH AND FOR A DISTANCE OF 10 FEET BEYOND THE PROPOSED BUILDING FOORTPRINT INCLUDING EXTERIOR COLUMNS.
2. EXISTING UTILITIES SHALL BE TERMINATED, UNLESS OTHERWISE NOTED, IN CONFORMANCE WITH LOCAL, STATE, AND INDIVIDUAL UTILITY COMPANY STANDARD SPECIFICATIONS AND DETAILS. THE CONTRACTOR SHALL COORDINATE UTILITY SERVICE DISCONNECTS WITH THE UTILITY REPRESENTATIVES.
3. CONTRACTOR SHALL DISPOSE OF DEMOLITION DEBRIS IN ACCORDANCE WITH APPLICABLE FEDERAL, STATE AND LOCAL REGULATIONS, ORDINANCES AND STATUES.

Existing Conditions:

1. THE EXISTING CONDITIONS SHOWN ARE BASED ON TOPOGRAPHIC SURVEY PREPARED BY THOMPSON FARLAND, INC. IN MARCH 2013.
2. TOPOGRAPHY: ELEVATIONS ARE BASED ON 1988 NAVD.
3. HORIZONTAL DATUM IS BASED ON MASS. GRID SYSTEM, NAD 1983.
4. ELEVATIONS REFERENCED IN THIS DRAWING REFLECT NAVD 1988 ELEVATIONS. ELEVATION CONVERSIONS TO THE CITY OF QUINCY BASE CAN BE PERFORMED BY APPLYING THE DATUM RELATIONSHIP ADJUSTMENTS SHOWN BELOW.
5. THE LOCATION OF ALL UNDERGROUND UTILITIES SHOWN HEREON ARE APPROXIMATE AND ARE BASED ON THE FIELD LOCATION OF ALL VISIBLE STRUCTURES SUCH AS CATCH BASINS, MANHOLES, WATER GATES, ETC. AND COMPILED FROM PLANS SUPPLIED BY VARIOUS UTILITY COMPANIES AND GOVERNMENT AGENCIES.
6. LUCAS ENVIRONMENTAL, LLC CONDUCTED A SITE INVESTIGATION NEAR THE CENTRE STREET JUNCTION BOX ON NOVEMBER 28, 2012 AND DECEMBER 29, 2012 TO IDENTIFY LOCAL, STATE, AND FEDERALLY REGULATED RESOURCE AREAS.

DATUM RELATIONSHIP

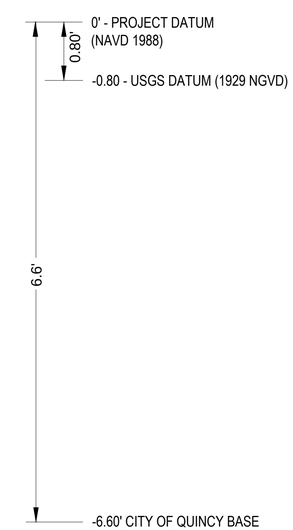

SCALE 1" = 1'

EBI Consulting
environmental | engineering | due diligence
21 B Street | Burlington, MA 01803
Tel: 781.273.2500 | Fax: 781.273.3311
www.ebiconsulting.com

COMMONWEALTH OF MASSACHUSETTS — KARLIS SKULTE — CIVIL — No. 47703 — REGISTERED PROFESSIONAL ENGINEER — 5/6/2013

PREPARED FOR:
City of Quincy
1305 Hancock Street
Quincy, MA 02169
Tel: (617) 376-1362
Fax: (617) 376-1097

THIS DOCUMENT IS THE DESIGN PROPERTY AND COPYRIGHT OF EBI CONSULTING, INC. AND FOR THE EXCLUSIVE USE BY THE TITLE CLIENT. ANY DUPLICATION OR USE WITHOUT EXPRESS WRITTEN CONSENT OF THE CREATOR IS STRICTLY PROHIBITED.

DRAWING SCALES NOTED ARE FOR 22" x 34" SIZE PRINTED MEDIA ONLY. ALL OTHER PRINTED SIZES ARE DEEMED "NOT TO SCALE".

SUBMITTALS

NO.	DATE	DESCRIPTION	BY

DATE: May 6, 2013
PROJECT NUMBER: 16120008

PROJECT TITLE:
Town Brook Base Flow Recapture Improvements
Centre Street
Quincy, Massachusetts 02169
Norfolk County

ISSUED FOR: Bidding

SHEET TITLE:
Legend & General Notes

SCALE: AS NOTED
SHEET NO: C-2
DESIGNED BY: MVG | JVC
CHECKED BY: KPS | BKF

J:\Fay Spofford & Thorndike\Town Brook Base Flow Recapture\CAD\Planset\Planset16120008 OSP.dwg

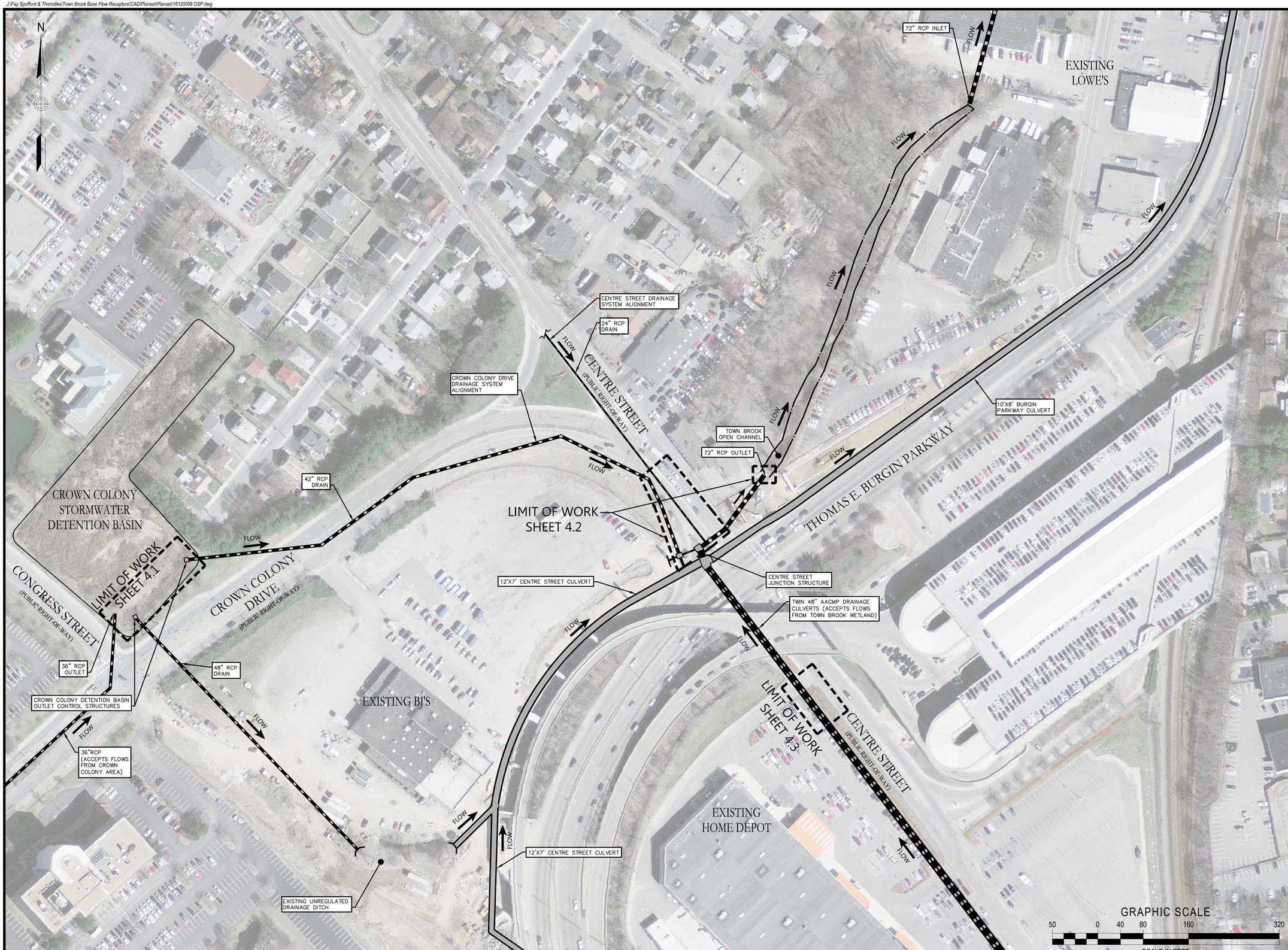

EBI Consulting
environmental | engineering | due diligence

21 B Street | Burlington, MA 01803
Tel: 781.273.2500 | Fax: 781.273.3311
www.ebiconsulting.com

COMMONWEALTH OF MASSACHUSETTS
KARLIS EKULITE
No. 47703
CIVIL
REGISTERED PROFESSIONAL ENGINEER
5/6/2013

PREPARED FOR:
City of Quincy

1305 Hancock Street
Quincy, MA 02169
Tel: (617) 376-1362
Fax: (617) 376-1097

THIS DOCUMENT IS THE DESIGN PROPERTY AND COPYRIGHT OF EBI CONSULTING, INC. AND FOR THE EXCLUSIVE USE BY THE TITLE CLIENT. ANY DUPLICATION OR USE WITHOUT EXPRESS WRITTEN CONSENT OF THE CREATOR IS STRICTLY PROHIBITED.

DRAWING SCALES NOTED ARE FOR 22" x 34" SIZE PRINTED MEDIA ONLY. ALL OTHER PRINTED SIZES ARE DEEMED "NOT TO SCALE".

SUBMITTALS

NO.	DATE	DESCRIPTION	BY

DATE: May 6, 2013

PROJECT NUMBER: 16120008

PROJECT TITLE:
Town Brook Base Flow Recapture Improvements

Centre Street
Quincy, Massachusetts 02169
Norfolk County

ISSUED FOR: Bidding

SHEET TITLE:
Existing Overall Site Plan & Key Map

SCALE: AS NOTED

DESIGNED BY: MVG | JVC

CHECKED BY: KPS | BKF

SHEET NO: C-3

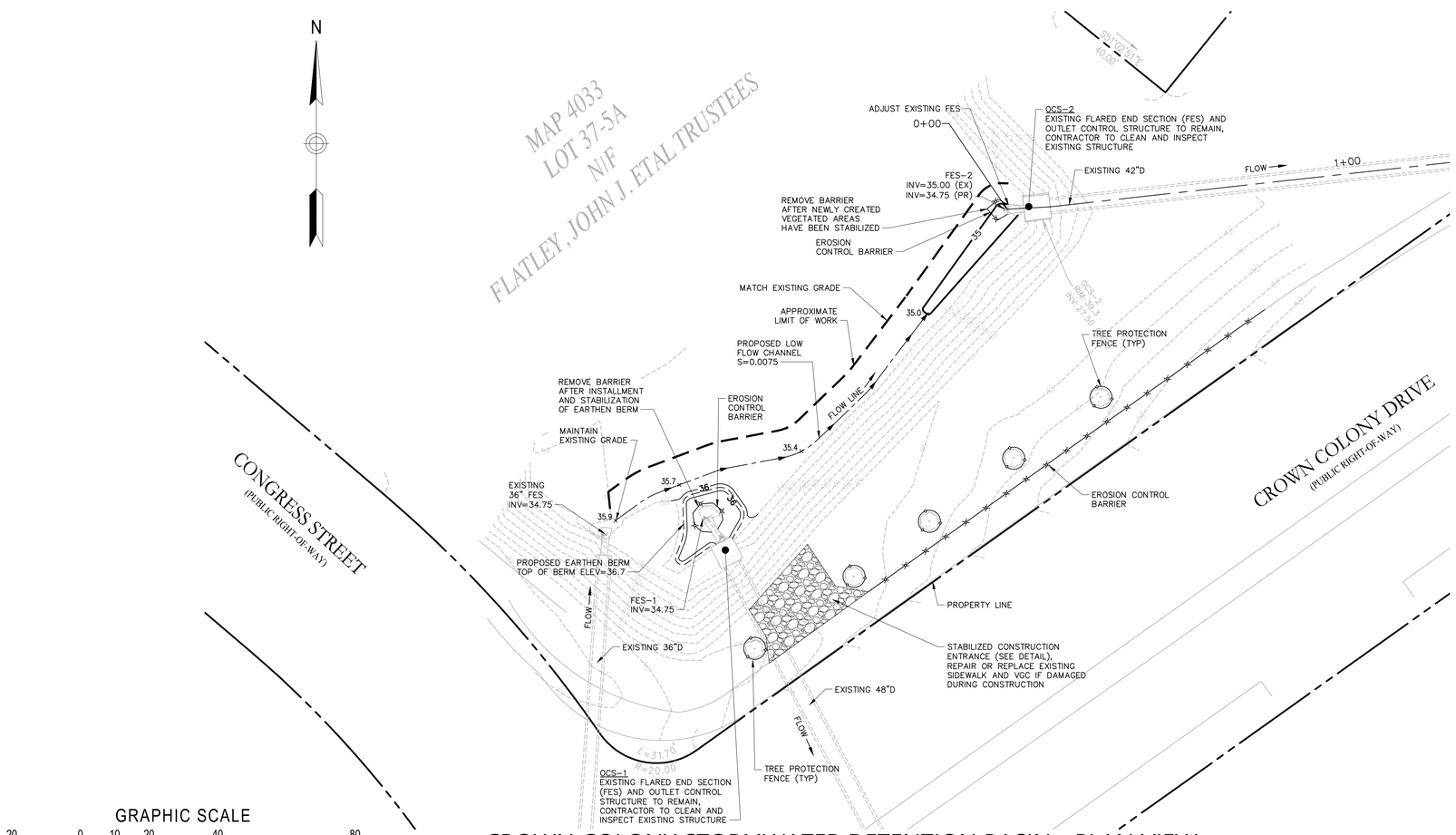

CROWN COLONY STORMWATER DETENTION BASIN - PLAN VIEW

1"=20'

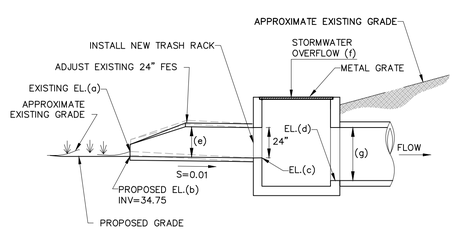

OCS NO.	INV IN (a)	INV IN (b)	INV OUT (c)	INV OUT (d)	DIA. (e)	RIM (f)	DIA. (g)
2	35.00	34.75	34.58	27.50	24"	39.3	42"

OCS-2 SECTION

SCALE: N.T.S.

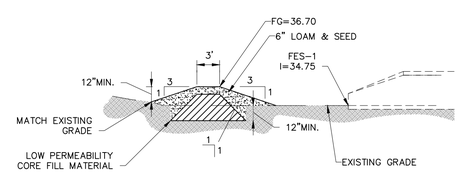

EARTHEN BERM

SCALE: N.T.S.

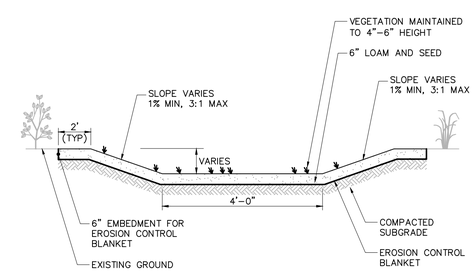

LOW FLOW CHANNEL

SCALE: N.T.S.

NOTES

1. ALL DISTURBED AREAS SHALL BE REVEGETATED TO MATCH EXISTING CONDITIONS, UNLESS OTHERWISE NOTED.
2. IMPROVEMENTS SHOWN ON LOT 37-5A MAY BE IMPLEMENTED UPON WRITTEN CONSENT FROM THE PROPERTY OWNER, OR AS OTHERWISE MAY BE AUTHORIZED IN ACCORDANCE WITH THE LAWS OF THE COMMONWEALTH.
3. ANY EXCESS EXCAVATED MATERIAL MUST BE DISPOSED OF IN A SAFE AND LEGAL MANNER.
4. DRAINAGE GENERATED BY DEWATERING SHALL BE DISCHARGED TO EXISTING DRAINAGE COURSES WITH PROPER EROSION CONTROL, IN ACCORDANCE WITH ALL APPLICABLE REGULATIONS.
5. PERMANENT SEEDING SHALL BE UNDERTAKEN IN THE SPRING FROM MARCH THROUGH MAY, AND IN LATE SUMMER AND EARLY FALL FROM AUGUST 1st TO OCTOBER 15th. DURING PEAK SUMMER MONTHS WHEN SEEDING IS FOUND TO BE IMPRACTICAL, APPROPRIATE TEMPORARY STABILIZATION SHALL BE APPLIED.
6. CONTRACTOR SHALL FURNISH, INSTALL AND MAINTAIN TRAFFIC CONTROL DEVICES FOR THE PROTECTION OF AREA RESIDENTS, THE TRAVELING PUBLIC AND WORKERS DURING CONSTRUCTION OPERATIONS.
7. TRAFFIC CONTROLS SHALL BE IN ACCORDANCE WITH THE MANUAL ON UNIFORM TRAFFIC CONTROL DEVICES, AND ANY ADDITIONAL APPLICABLE REGULATIONS AND REQUIREMENTS.

EBI Consulting
environmental | engineering | due diligence
21 B Street | Burlington, MA 01803
Tel: 781.273.2500 | Fax: 781.273.3311
www.ebiconsulting.com

COMMONWEALTH OF MASSACHUSETTS
KARLIS SKULTE
CIVIL
No. 47703
REGISTERED PROFESSIONAL ENGINEER
5/6/2013

PREPARED FOR:
City of Quincy
1305 Hancock Street
Quincy, MA 02169
Tel: (617) 376-1362
Fax: (617) 376-1097

THIS DOCUMENT IS THE DESIGN PROPERTY AND COPYRIGHT OF EBI CONSULTING, INC. AND FOR THE EXCLUSIVE USE BY THE TITLE CLIENT. ANY DUPLICATION OR USE WITHOUT EXPRESS WRITTEN CONSENT OF THE CREATOR IS STRICTLY PROHIBITED.

DRAWING SCALES NOTED ARE FOR 22" x 34" SIZE PRINTED MEDIA ONLY. ALL OTHER PRINTED SIZES ARE DEEMED "NOT TO SCALE".

SUBMITTALS

NO.	DATE	DESCRIPTION	BY

DATE: May 6, 2013
PROJECT NUMBER: 16120008

PROJECT TITLE:
Town Brook Base Flow Recapture Improvements
Centre Street
Quincy, Massachusetts 02169
Norfolk County

ISSUED FOR: Bidding

SHEET TITLE:
Proposed Improvements Crown Colony Stormwater Detention Basin

SCALE: AS NOTED
DESIGNED BY: MVG | JVC
CHECKED BY: KPS | BKF

SHEET NO: C-4.1

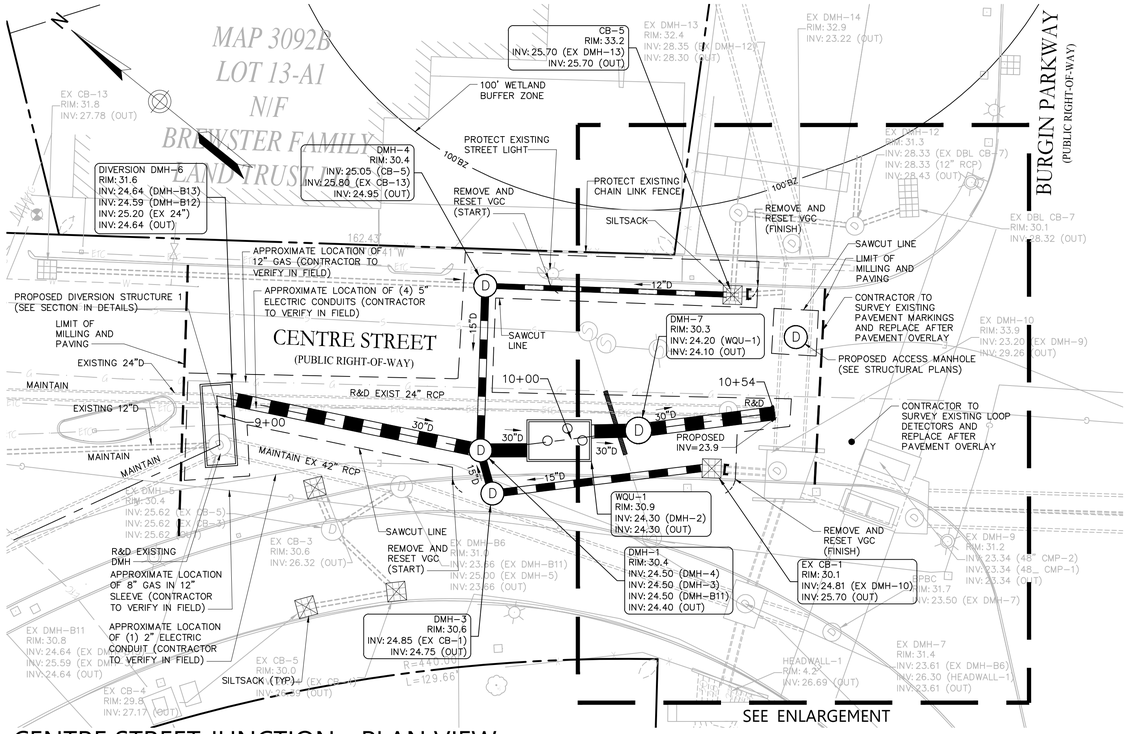

CENTRE STREET JUNCTION - PLAN VIEW

1"=20'

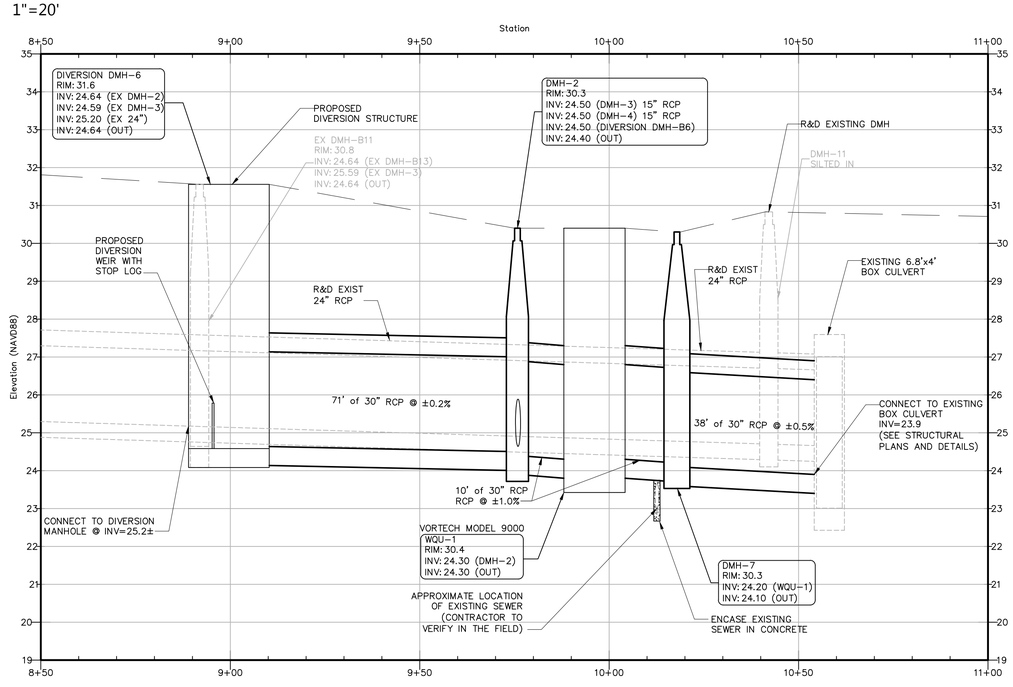

CENTRE STREET JUNCTION - PROFILE VIEW

1"=20' H
1"=2' V

HORIZONTAL SCALE IN FEET

VERTICAL SCALE IN FEET

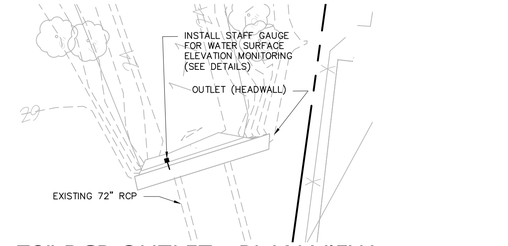

72" RCP OUTLET - PLAN VIEW

1"=10'

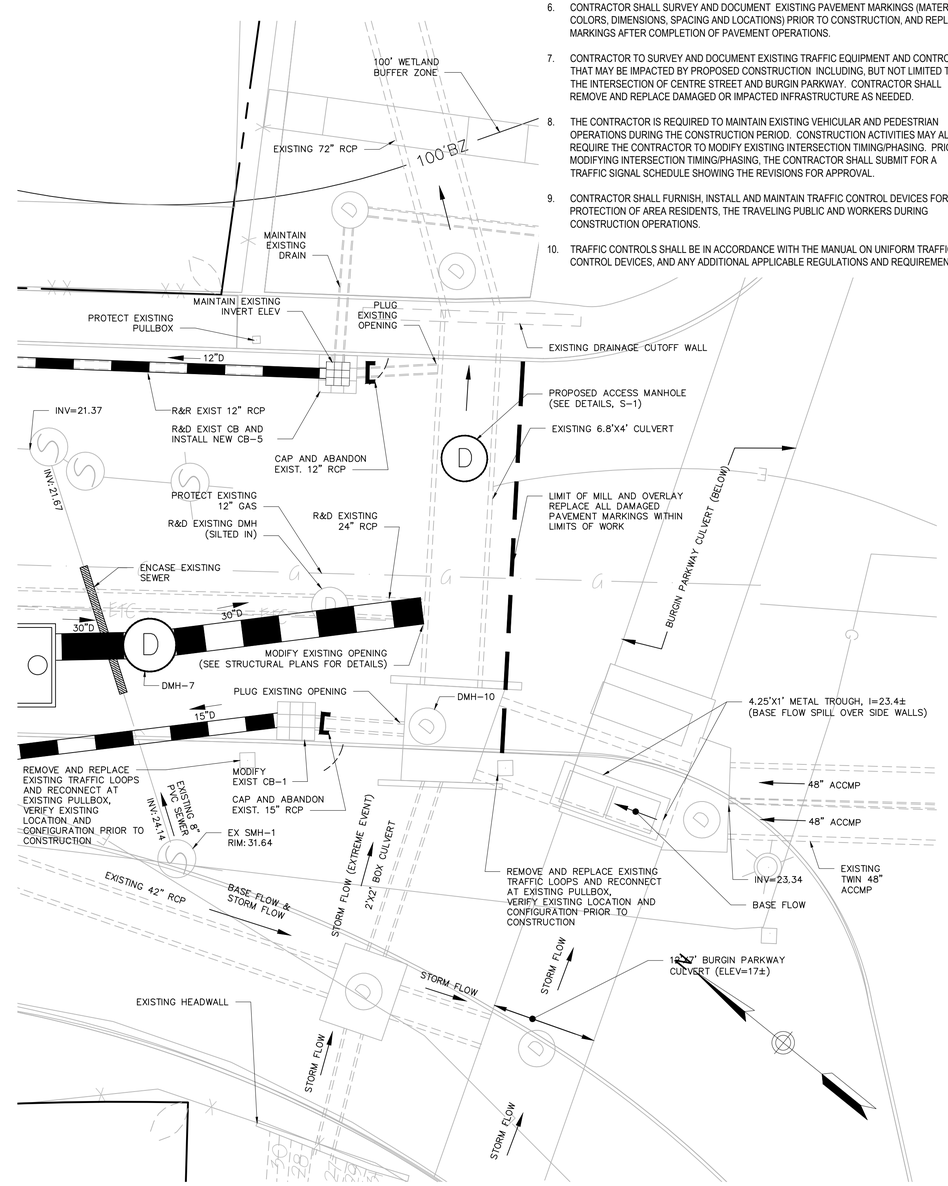

CENTRE STREET JUNCTION ENLARGEMENT - PLAN VIEW

1"=10'

NOTES

1. THE LOCATIONS, SIZES, AND TYPES OF EXISTING UTILITIES ARE SHOWN AS AN APPROXIMATE REPRESENTATION ONLY. THE OWNER OR IT'S REPRESENTATIVES HAVE NOT INDEPENDENTLY VERIFIED THIS INFORMATION AS SHOWN ON THE PLANS. THE UTILITY INFORMATION SHOWN DOES NOT GUARANTEE THE ACTUAL EXISTENCE, SERVICEABILITY, OR OTHER DATA CONCERNING THE UTILITIES, NOR DOES IT GUARANTEE AGAINST THE POSSIBILITY THAT ADDITIONAL UTILITIES MAY BE PRESENT THAT ARE NOT SHOWN ON THE PLANS. PRIOR TO ORDERING MATERIALS AND BEGINNING CONSTRUCTION, THE CONTRACTOR SHALL VERIFY AND DETERMINE THE EXACT LOCATIONS, SIZES, AND ELEVATIONS OF THE POINTS OF ALL CONNECTIONS TO EXISTING UTILITIES AND, SHALL CONFIRM THAT THERE ARE NO INTERFERENCES WITH EXISTING UTILITIES AND THE PROPOSED UTILITY ROUTES, INCLUDING ROUTES WITHIN THE PUBLIC RIGHTS OF WAY.
2. PERMANENT SEEDING SHALL BE UNDERTAKEN IN THE SPRING FROM MARCH THROUGH MAY, AND IN LATE SUMMER AND EARLY FALL FROM AUGUST 1st TO OCTOBER 15th. DURING PEAK SUMMER MONTHS WHEN SEEDING IS FOUND TO BE IMPRACTICAL, APPROPRIATE TEMPORARY STABILIZATION SHALL BE APPLIED.
4. ANY EXCESS EXCAVATED MATERIAL MUST BE DISPOSED OF IN A SAFE AND LEGAL MANNER.
5. DRAINAGE GENERATED BY DEWATERING SHALL BE DISCHARGED TO EXISTING DRAINAGE COURSES WITH PROPER EROSION CONTROL, IN ACCORDANCE WITH ALL APPLICABLE REGULATIONS.
6. CONTRACTOR SHALL SURVEY AND DOCUMENT EXISTING PAVEMENT MARKINGS (MATERIALS, COLORS, DIMENSIONS, SPACING AND LOCATIONS) PRIOR TO CONSTRUCTION, AND REPLACE MARKINGS AFTER COMPLETION OF PAVEMENT OPERATIONS.
7. CONTRACTOR TO SURVEY AND DOCUMENT EXISTING TRAFFIC EQUIPMENT AND CONTROLS THAT MAY BE IMPACTED BY PROPOSED CONSTRUCTION INCLUDING, BUT NOT LIMITED TO THE INTERSECTION OF CENTRE STREET AND BURGIN PARKWAY. CONTRACTOR SHALL REMOVE AND REPLACE DAMAGED OR IMPACTED INFRASTRUCTURE AS NEEDED.
8. THE CONTRACTOR IS REQUIRED TO MAINTAIN EXISTING VEHICULAR AND PEDESTRIAN OPERATIONS DURING THE CONSTRUCTION PERIOD. CONSTRUCTION ACTIVITIES MAY ALSO REQUIRE THE CONTRACTOR TO MODIFY EXISTING INTERSECTION TIMING/PHASING. PRIOR TO MODIFYING INTERSECTION TIMING/PHASING, THE CONTRACTOR SHALL SUBMIT FOR A TRAFFIC SIGNAL SCHEDULE SHOWING THE REVISIONS FOR APPROVAL.
9. CONTRACTOR SHALL FURNISH, INSTALL AND MAINTAIN TRAFFIC CONTROL DEVICES FOR THE PROTECTION OF AREA RESIDENTS, THE TRAVELING PUBLIC AND WORKERS DURING CONSTRUCTION OPERATIONS.
10. TRAFFIC CONTROLS SHALL BE IN ACCORDANCE WITH THE MANUAL ON UNIFORM TRAFFIC CONTROL DEVICES, AND ANY ADDITIONAL APPLICABLE REGULATIONS AND REQUIREMENTS.

EBI Consulting
environmental | engineering | due diligence
21 B Street | Burlington, MA 01803
Tel: 781.273.2500 | Fax: 781.273.3311
www.ebiconsulting.com

COMMONWEALTH OF MASSACHUSETTS
KARLIS SKULTE
CIVIL
No. 47709
REGISTERED PROFESSIONAL ENGINEER
5/6/2013

PREPARED FOR:
City of Quincy
1305 Hancock Street
Quincy, MA 02169
Tel: (617) 376-1362
Fax: (617) 376-1097

THIS DOCUMENT IS THE DESIGN PROPERTY AND COPYRIGHT OF EBI CONSULTING, INC. AND FOR THE EXCLUSIVE USE BY THE TITLE CLIENT. ANY DUPLICATION OR USE WITHOUT EXPRESS WRITTEN CONSENT OF THE CREATOR IS STRICTLY PROHIBITED.

DRAWING SCALES NOTED ARE FOR 22" x 34" SIZE PRINTED MEDIA ONLY. ALL OTHER PRINTED SIZES ARE DEEMED "NOT TO SCALE".

SUBMITTALS

NO.	DATE	DESCRIPTION	BY

DATE: May 6, 2013
PROJECT NUMBER: 16120008

PROJECT TITLE:
Town Brook Base Flow Recapture Improvements
Centre Street
Quincy, Massachusetts 02169
Norfolk County

ISSUED FOR: Bidding

SHEET TITLE:
Proposed Improvements Centre Street (North)

SCALE: AS NOTED
DESIGNED BY: MVG | JVC
CHECKED BY: KPS | BKF
SHEET NO: C-4.2

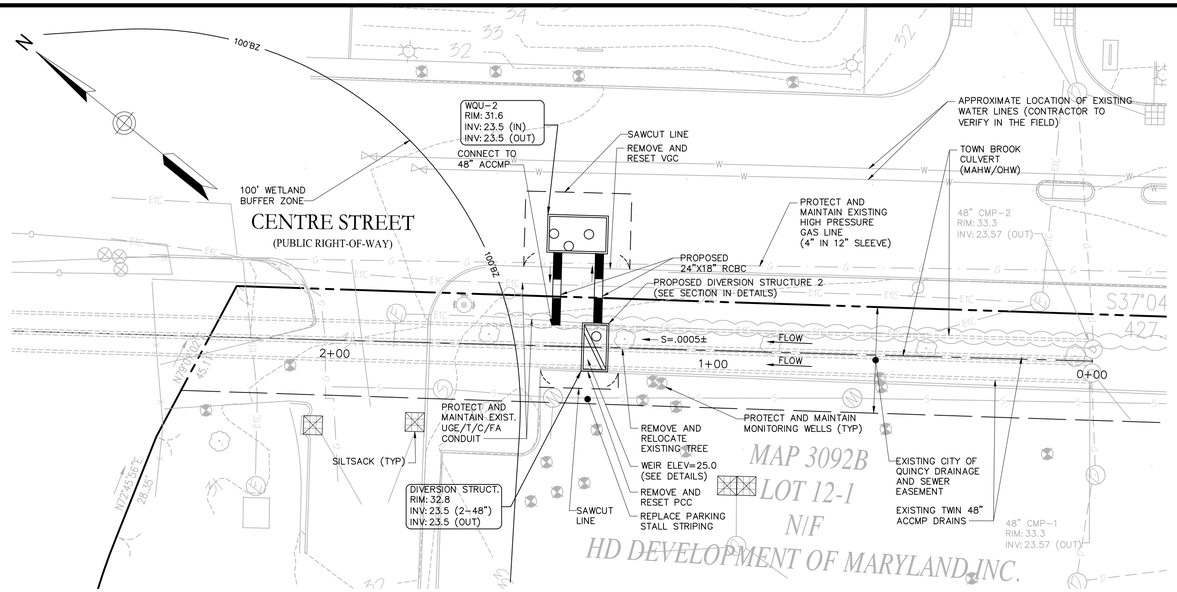

HORIZONTAL SCALE IN FEET

20 0 10 20 40 80

2 0 1 2 4 8

VERTICAL SCALE IN FEET

HOME DEPOT AREA - PLAN VIEW

1"=20'

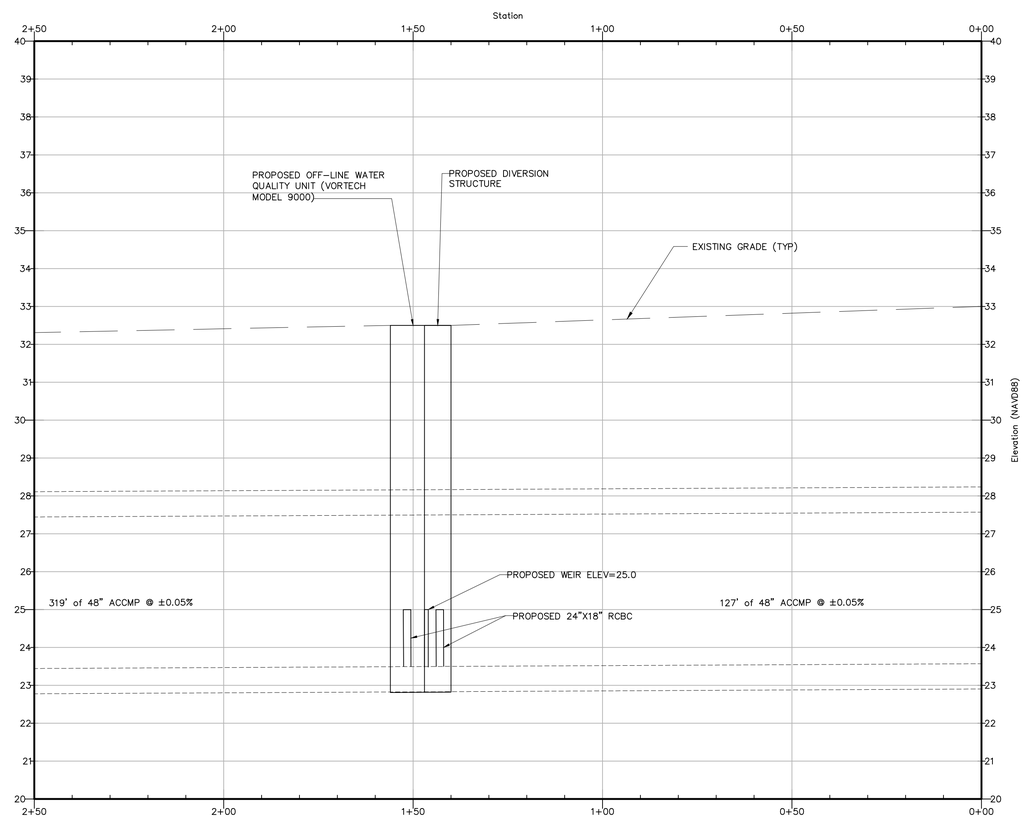

HOME DEPOT AREA - PROFILE VIEW

1"=20' H

1"=2' V

NOTES

1. THE LOCATIONS, SIZES, AND TYPES OF EXISTING UTILITIES ARE SHOWN AS AN APPROXIMATE REPRESENTATION ONLY. THE OWNER OR IT'S REPRESENTATIVES HAVE NOT INDEPENDENTLY VERIFIED THIS INFORMATION AS SHOWN ON THE PLANS. THE UTILITY INFORMATION SHOWN DOES NOT GUARANTEE THE ACTUAL EXISTENCE, SERVICEABILITY, OR OTHER DATA CONCERNING THE UTILITIES, NOR DOES IT GUARANTEE AGAINST THE POSSIBILITY THAT ADDITIONAL UTILITIES MAY BE PRESENT THAT ARE NOT SHOWN ON THE PLANS. PRIOR TO ORDERING MATERIALS AND BEGINNING CONSTRUCTION, THE CONTRACTOR SHALL VERIFY AND DETERMINE THE EXACT LOCATIONS, SIZES, AND ELEVATIONS OF THE POINTS OF ALL CONNECTIONS TO EXISTING UTILITIES AND, SHALL CONFIRM THAT THERE ARE NO INTERFERENCES WITH EXISTING UTILITIES AND THE PROPOSED UTILITY ROUTES, INCLUDING ROUTES WITHIN THE PUBLIC RIGHTS OF WAY.
2. ALL DISTURBED AREAS SHALL BE REVEGETATED TO MATCH EXISTING CONDITIONS, UNLESS OTHERWISE NOTED.
3. ANY EXCESS EXCAVATED MATERIAL MUST BE DISPOSED OF IN A SAFE AND LEGAL MANNER.
4. DRAINAGE GENERATED BY DEWATERING SHALL BE DISCHARGED TO EXISTING DRAINAGE COURSES WITH PROPER EROSION CONTROL, IN ACCORDANCE WITH ALL APPLICABLE REGULATIONS.
5. PERMANENT SEEDING SHALL BE UNDERTAKEN IN THE SPRING FROM MARCH THROUGH MAY, AND IN LATE SUMMER AND EARLY FALL FROM AUGUST 1st TO OCTOBER 15th. DURING PEAK SUMMER MONTHS WHEN SEEDING IS FOUND TO BE IMPRACTICAL, APPROPRIATE TEMPORARY STABILIZATION SHALL BE APPLIED.
6. CONTRACTOR SHALL SURVEY AND DOCUMENT EXISTING PAVEMENT MARKINGS (MATERIALS, COLORS, DIMENSIONS, SPACING AND LOCATIONS) PRIOR TO CONSTRUCTION, AND REPLACE MARKINGS AFTER COMPLETION OF PAVEMENT OPERATIONS.
7. CONTRACTOR TO SURVEY AND DOCUMENT EXISTING TRAFFIC EQUIPMENT AND CONTROLS THAT MAY BE IMPACTED BY PROPOSED CONSTRUCTION INCLUDING, BUT NOT LIMITED TO THE INTERSECTION OF CENTRE STREET AND BURGIN PARKWAY. CONTRACTOR SHALL REMOVE AND REPLACE DAMAGED OR IMPACTED INFRASTRUCTURE AS NEEDED.
8. THE CONTRACTOR IS REQUIRED TO MAINTAIN EXISTING VEHICULAR AND PEDESTRIAN OPERATIONS DURING THE CONSTRUCTION PERIOD. CONSTRUCTION ACTIVITIES MAY ALSO REQUIRE THE CONTRACTOR TO MODIFY EXISTING INTERSECTION TIMING/PHASING. PRIOR TO MODIFYING INTERSECTION TIMING/PHASING, THE CONTRACTOR SHALL SUBMIT FOR A TRAFFIC SIGNAL SCHEDULE SHOWING THE REVISIONS FOR APPROVAL.
9. CONTRACTOR SHALL FURNISH, INSTALL AND MAINTAIN TRAFFIC CONTROL DEVICES FOR THE PROTECTION OF AREA RESIDENTS, THE TRAVELING PUBLIC AND WORKERS DURING CONSTRUCTION OPERATIONS.
10. TRAFFIC CONTROLS SHALL BE IN ACCORDANCE WITH THE MANUAL ON UNIFORM TRAFFIC CONTROL DEVICES, AND ANY ADDITIONAL APPLICABLE REGULATIONS AND REQUIREMENTS.

EBI Consulting
environmental | engineering | due diligence
21 B Street | Burlington, MA 01803
Tel: 781.273.2500 | Fax: 781.273.3311
www.ebiconsulting.com

COMMONWEALTH OF MASSACHUSETTS
KARLIS SKULITE
CIVIL
No. 47703
REGISTERED PROFESSIONAL ENGINEER
5/6/2013

PREPARED FOR:
City of Quincy
1305 Hancock Street
Quincy, MA 02169
Tel: (617) 376-1362
Fax: (617) 376-1097

THIS DOCUMENT IS THE DESIGN PROPERTY AND COPYRIGHT OF EBI CONSULTING, INC. AND FOR THE EXCLUSIVE USE BY THE TITLE CLIENT. ANY DUPLICATION OR USE WITHOUT EXPRESS WRITTEN CONSENT OF THE CREATOR IS STRICTLY PROHIBITED.

DRAWING SCALES NOTED ARE FOR 22" x 34" SIZE PRINTED MEDIA ONLY. ALL OTHER PRINTED SIZES ARE DEEMED "NOT TO SCALE".

SUBMITTALS

NO.	DATE	DESCRIPTION	BY

DATE: May 6, 2013

PROJECT NUMBER: 16120008

PROJECT TITLE:
Town Brook Base Flow Recapture Improvements
Centre Street
Quincy, Massachusetts 02169
Norfolk County

ISSUED FOR: Bidding

SHEET TITLE:
Proposed Improvements Centre Street (South)

SCALE: AS NOTED

DESIGNED BY: MVG | JVC

CHECKED BY: KPS | BKF

SHEET NO: C-4.3

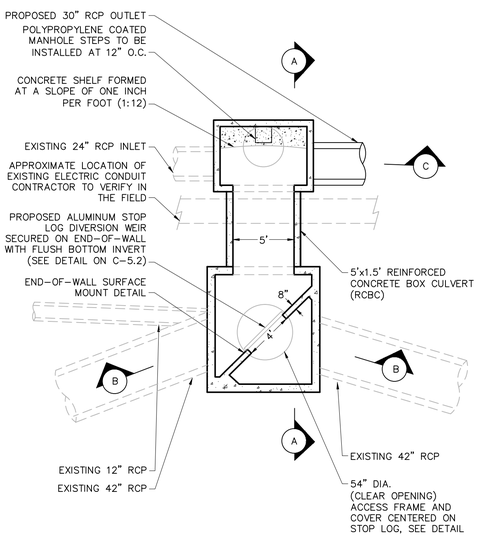

Plan

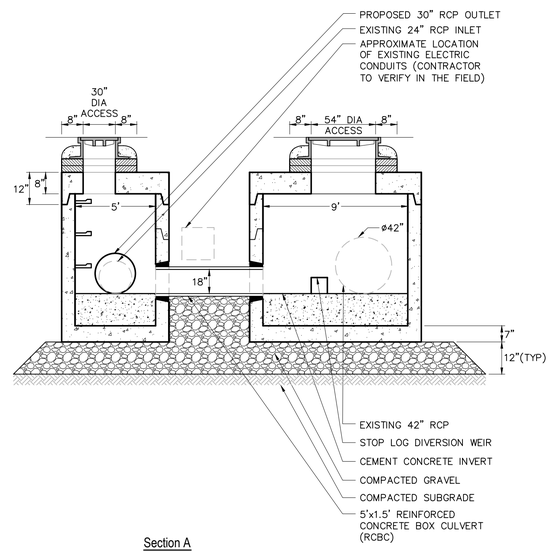

Section A

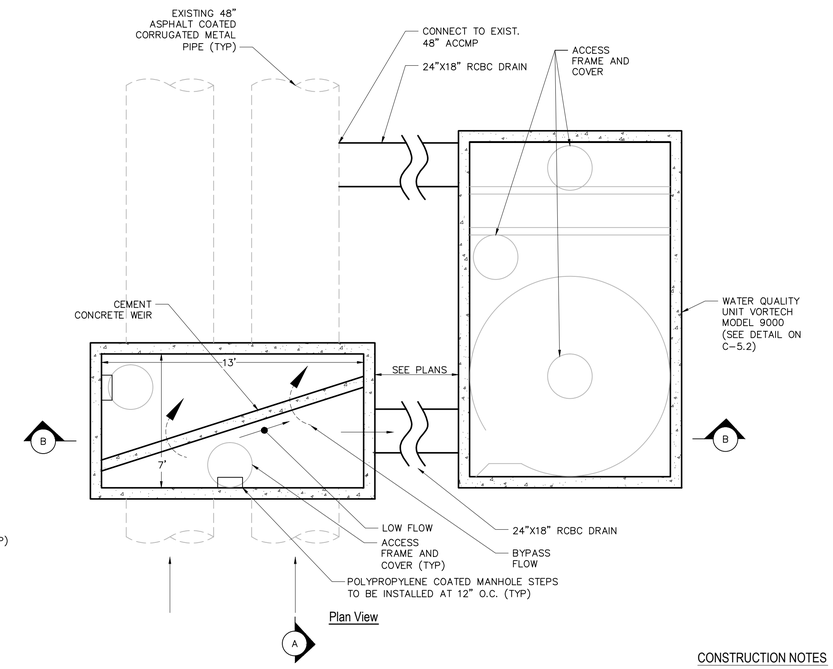

Plan View

CONSTRUCTION NOTES

1. STRUCTURE TO BE PRECAST CONCRETE, MINIMUM 4,000 PSI. ALL SECTIONS TO BE DESIGNED TO MEET OR EXCEED HS-20 LOADING.
2. BASE TO BE SINGLE POUR MONOLITHIC SECTION.

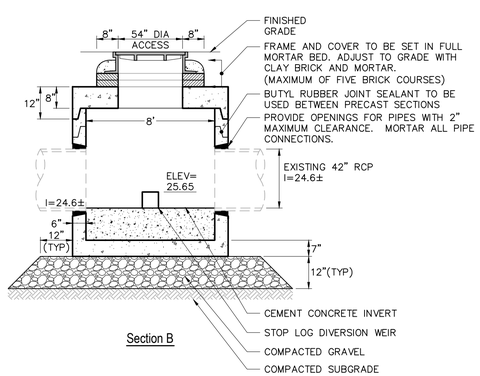

Section B

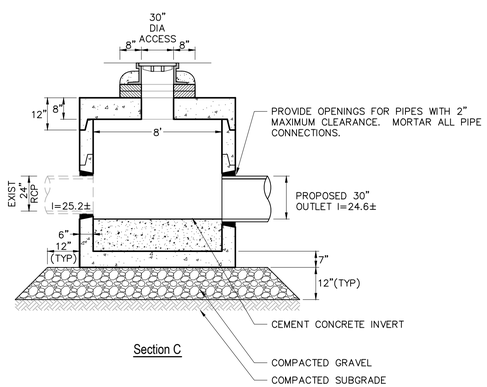

Section C

CONSTRUCTION NOTES

1. STRUCTURE TO BE PRECAST CONCRETE, MINIMUM 4,000 PSI. ALL SECTIONS TO BE DESIGNED TO MEET OR EXCEED HS-20 LOADING.
2. BASE TO BE SINGLE POUR MONOLITHIC SECTION.

DIVERSION STRUCTURE 1

SCALE: N.T.S.

C-4.2

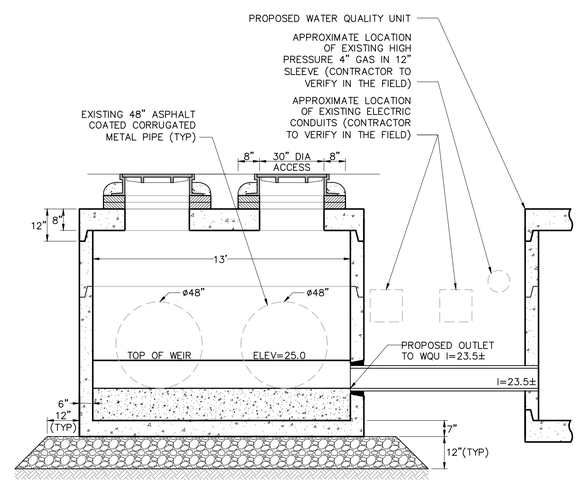

Section B

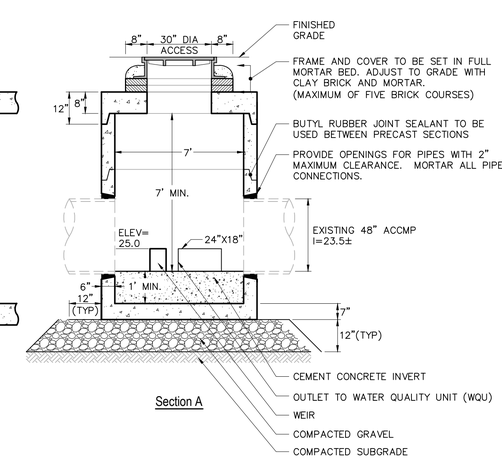

Section A

DIVERSION STRUCTURE 2

SCALE: N.T.S.

C-4.3

EBI Consulting
environmental | engineering | due diligence
21 B Street | Burlington, MA 01803
Tel: 781.273.2500 | Fax: 781.273.3311
www.ebiconsulting.com

COMMONWEALTH OF MASSACHUSETTS KARLIS KKULITE CIVIL No. 47703 REGISTERED PROFESSIONAL ENGINEER 5/6/2013

PREPARED FOR:
City of Quincy
1305 Hancock Street
Quincy, MA 02169
Tel: (617) 376-1362
Fax: (617) 376-1097

THIS DOCUMENT IS THE DESIGN PROPERTY AND COPYRIGHT OF EBI CONSULTING, INC. AND FOR THE EXCLUSIVE USE BY THE TITLE CLIENT. ANY DUPLICATION OR USE WITHOUT EXPRESS WRITTEN CONSENT OF THE CREATOR IS STRICTLY PROHIBITED.

DRAWING SCALES NOTED ARE FOR 22" x 34" SIZE PRINTED MEDIA ONLY. ALL OTHER PRINTED SIZES ARE DEEMED "NOT TO SCALE".

SUBMITTALS

NO.	DATE	DESCRIPTION	BY

DATE: May 6, 2013
PROJECT NUMBER: 16120008

PROJECT TITLE:
Town Brook Base Flow Recapture Improvements
Centre Street
Quincy, Massachusetts 02169
Norfolk County

ISSUED FOR: Bidding

SHEET TITLE:
Site Details 1

SCALE: N.T.S.
DESIGNED BY: MVG/JVC
CHECKED BY: KPS/BKF
SHEET NO: C-5.1

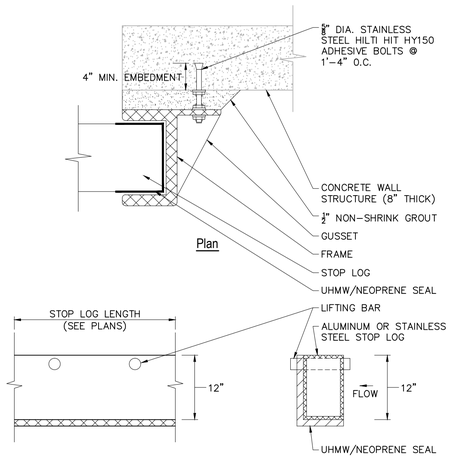

Plan

Profile

Section

CONSTRUCTION NOTES

1. METHOD OF INSTALLATION SHALL BE AS PER MANUFACTURER'S RECOMMENDATIONS.

STOP LOG WEIR

SCALE: N.T.S.

C-4.2

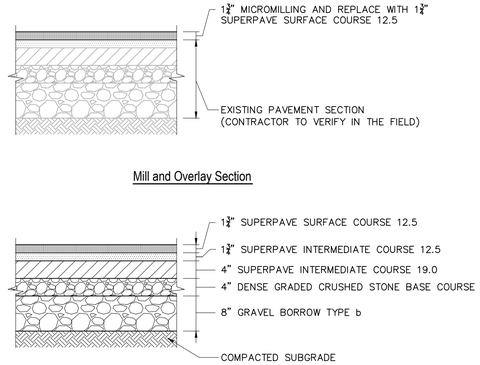

Mill and Overlay Section

Full Depth Reconstruction Section

CONSTRUCTION NOTES

1. PAVEMENT SECTIONS ARE SUBJECT TO CHANGE AND WILL BE BASED ON THE RESULTS OF FURTHER GEOTECHNICAL INVESTIGATIONS.

BITUMINOUS CONCRETE PAVEMENT

SCALE: N.T.S.

C-4.2

NOTE:
VORTECHS SYSTEMS INSTALLED IN A BYPASS CONFIGURATION REQUIRE AN UPSTREAM DIVERSION STRUCTURE THAT SHALL BE DETAILED BY THE CONSULTING ENGINEER WITH ELEVATION AND WEIR WIDTH DATA PROVIDED BY CONTECH STORMWATER SOLUTIONS.

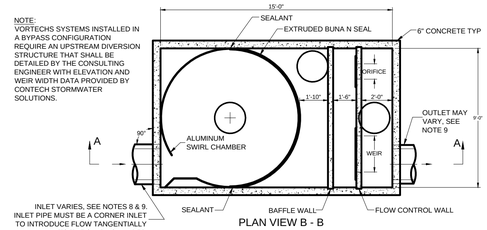

PLAN VIEW B - B

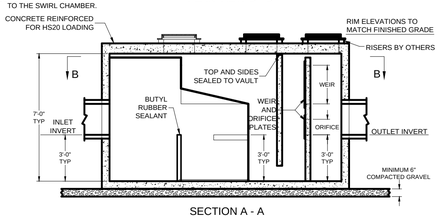

SECTION A - A

NOTES:

1. STORMWATER TREATMENT SYSTEM (SWTS) SHALL HAVE:

   PEAK TREATMENT CAPACITY: 14 CFS
   SEDIMENT STORAGE: 4.8 CU YD
   SEDIMENT CHAMBER DIA: 9' MIN

2. SWTS SHALL BE CONTAINED IN ONE RECTANGULAR STRUCTURE
3. SWTS REMOVAL EFFICIENCY SHALL BE DOCUMENTED BASED ON PARTICLE SIZE
4. SWTS SHALL RETAIN FLOATABLES AND TRAPPED SEDIMENT UP TO AND INCLUDING PEAK TREATMENT CAPACITY
5. SWTS INVERTS IN AND OUT ARE TYPICALLY AT THE SAME ELEVATION
6. SWTS SHALL NOT BE COMPROMISED BY EFFECTS OF DOWNSTREAM TAILWATER
7. SWTS SHALL HAVE NO INTERNAL COMPONENTS THAT OBSTRUCT MAINTENANCE ACCESS
8. INLET PIPE MUST BE PERPENDICULAR TO THE STRUCTURE
9. PIPE ORIENTATION MAY VARY; SEE SITE PLAN FOR SIZE AND LOCATION
10. PURCHASER SHALL NOT BE RESPONSIBLE FOR ASSEMBLY OF UNIT
11. MANHOLE FRAMES AND PERFORATED COVERS SUPPLIED WITH SYSTEM, NOT INSTALLED
12. PURCHASER TO PREPARE EXCAVATION AND PROVIDE CRANE FOR OFF-LOADING AND SETTING AT TIME OF DELIVERY
13. VORTECHS SYSTEMS BY CONTECH STORMWATER SOLUTIONS; PORTLAND, OR (800)548-4667; SCARBOROUGH, ME (877) 907-8676; LINTHICUM, MD (866) 740-3318.

WATER QUALITY UNIT - VORTECH MODEL 9000

SCALE: N.T.S. (PROVIDED BY CONTECH STORMWATER SOLUTIONS)

C-4.2

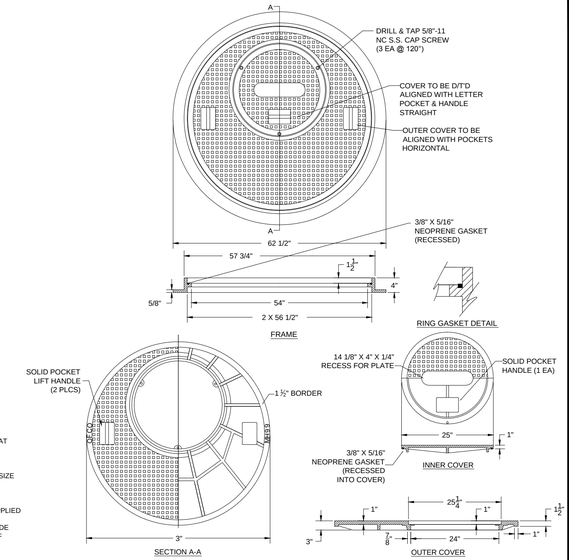

CONSTRUCTION NOTES

1. ALL COMPONENTS TO BE DESIGNED TO MEET OR EXCEED HS-20 LOADING.

54" ACCESS FRAME AND COVER

SCALE: N.T.S. (PROVIDED BY OLYMPIC FOUNDRY, INC.)

C-4.2

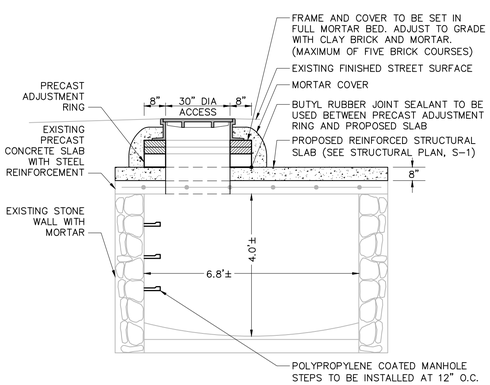

CONSTRUCTION NOTES

1. EXISTING DRAINAGE CULVERT INFORMATION TAKEN FROM THE CENTRE ST./CROWN COLONY DRIVE STREET RECONSTRUCTION PLANS DATED MARCH 27, 1989 AND FIELD OBSERVATIONS.

ACCESS MANHOLE

SCALE: N.T.S.

DWG#

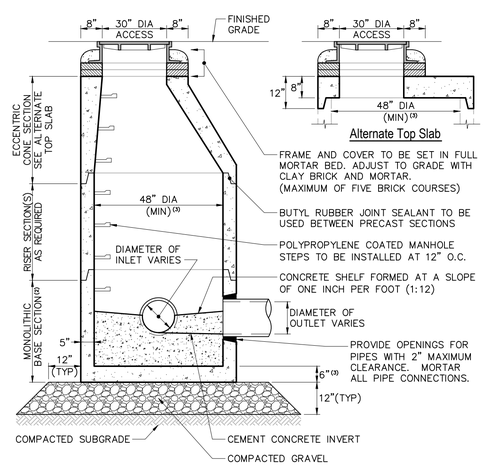

CONSTRUCTION NOTES

1. STRUCTURE TO BE PRECAST CONCRETE, MINIMUM 4,000 PSI. ALL SECTIONS TO BE DESIGNED TO MEET OR EXCEED HS-20 LOADING.
2. BASE TO BE SINGLE POUR MONOLITHIC SECTION.
3. 60" (5'-0") INSIDE DIAMETER FOR ALL MANHOLE DEPTHS GREATER THAN 20 FEET. 6" MINIMUM WALL THICKNESS AND 7" MINIMUM BASE THICKNESS FOR 5'-0" DIAMETER PRECAST MANHOLE.

DRAIN MANHOLE (DMH)

SCALE: N.T.S.

C-4.2

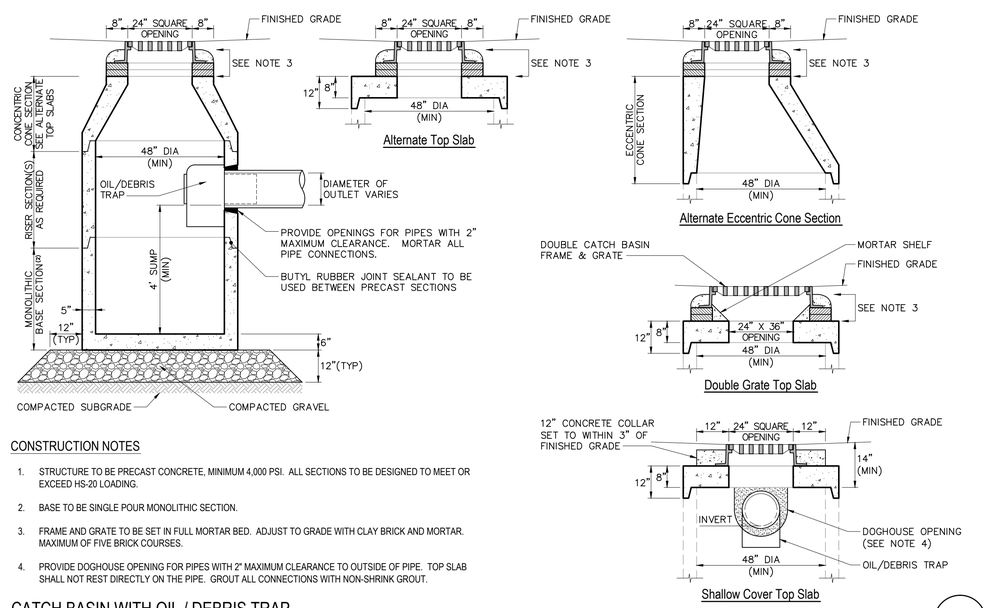

CONSTRUCTION NOTES

1. STRUCTURE TO BE PRECAST CONCRETE, MINIMUM 4,000 PSI. ALL SECTIONS TO BE DESIGNED TO MEET OR EXCEED HS-20 LOADING.
2. BASE TO BE SINGLE POUR MONOLITHIC SECTION.
3. FRAME AND GRATE TO BE SET IN FULL MORTAR BED. ADJUST TO GRADE WITH CLAY BRICK AND MORTAR. MAXIMUM OF FIVE BRICK COURSES.
4. PROVIDE DOGHOUSE OPENING FOR PIPES WITH 2" MAXIMUM CLEARANCE TO OUTSIDE OF PIPE. TOP SLAB SHALL NOT REST DIRECTLY ON THE PIPE. GROUT ALL CONNECTIONS WITH NON-SHRINK GROUT.

CATCH BASIN WITH OIL / DEBRIS TRAP

SCALE: N.T.S.

C-4.2

EBI Consulting
environmental | engineering | due diligence
21 B Street | Burlington, MA 01803
Tel: 781.273.2500 | Fax: 781.273.3311
www.ebiconsulting.com

COMMONWEALTH OF MASSACHUSETTS KARLIS BKULITE CIVIL No. 47703 REGISTERED PROFESSIONAL ENGINEER
5/6/2013

PREPARED FOR:
City of Quincy

1305 Hancock Street
Quincy, MA 02169
Tel: (617) 376-1362
Fax: (617) 376-1097

THIS DOCUMENT IS THE DESIGN PROPERTY AND COPYRIGHT OF EBI CONSULTING, INC. AND FOR THE EXCLUSIVE USE BY THE TITLE CLIENT. ANY DUPLICATION OR USE WITHOUT EXPRESS WRITTEN CONSENT OF THE CREATOR IS STRICTLY PROHIBITED.

DRAWING SCALES NOTED ARE FOR 22" x 34" SIZE PRINTED MEDIA ONLY. ALL OTHER PRINTED SIZES ARE DEEMED "NOT TO SCALE".

SUBMITTALS

NO.	DATE	DESCRIPTION	BY

DATE: May 6, 2013

PROJECT NUMBER: 16120008

PROJECT TITLE:
Town Brook Base Flow Recapture Improvements

Centre Street
Quincy, Massachusetts 02169
Norfolk County

ISSUED FOR: Bidding

SHEET TITLE:
Site Details 2

SCALE: N.T.S.

DESIGNED BY: MVG/JVC

CHECKED BY: KPS/BKF

SHEET NO: C-5.2

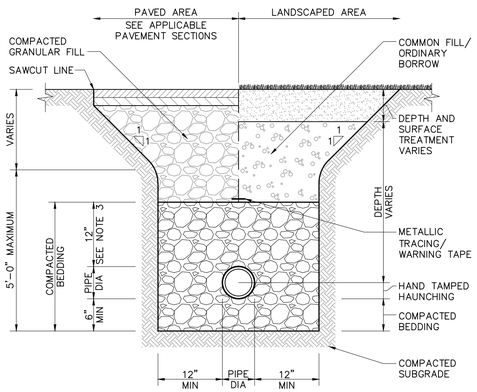

CONSTRUCTION NOTES

1. WHERE UTILITY TRENCHES ARE CONSTRUCTED THROUGH DETENTION BASIN BERMS OR OTHER SUCH SPECIAL SECTIONS, PLACE TRENCH BACKFILL WITH MATERIALS SIMILAR TO THE SPECIAL SECTION REQUIREMENTS.
2. USE METALLIC TRACING/WARNING TAPE OVER ALL PIPES.
3. FOR HIGH DENSITY POLYETHYLENE (HDPE) PIPE, DIMENSION IS 24 INCHES.

UTILITY TRENCH

SCALE: N.T.S.

C-4.2

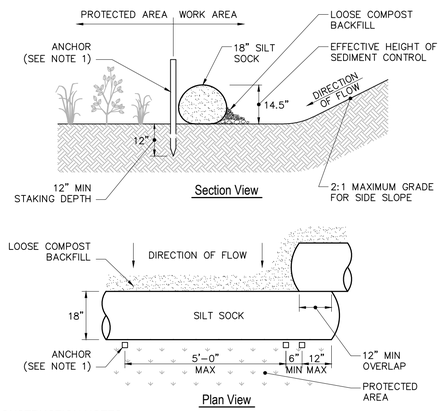

CONSTRUCTION NOTES

1. ANCHOR TO BE A 2" X 2" X 36" HARD WOOD STAKE, OR APPROVED EQUAL.
2. COMPOST FOR SILT SOCK FILL MATERIAL TO BE PROVIDED BY THE MANUFACTURER IN CONJUNCTION WITH THE ENGINEER TO PROVIDE THE REQUIRED REMOVAL OF SEDIMENT OR OTHER POLLUTANTS FROM RUNOFF.
3. COMPOST MATERIAL SHALL BE DISPERSED ON SITE, AS DETERMINED BY THE LOCAL CONSERVATION AGENT OR THE DESIGN ENGINEER.
4. SILT SOCK SHALL BE INSPECTED AT LEAST ONCE EVERY SEVEN DAYS OR PER LOCAL AND STATE REQUIREMENTS. REPAIR OR REPLACEMENT SHALL BE PERFORMED PROMPTLY, AS NEEDED.
5. METHOD OF INSTALLATION SHALL BE AS PER MANUFACTURER'S RECOMMENDATIONS.

SILT SOCK (EROSION CONTROL BARRIER)

SCALE: N.T.S.

C-4.1

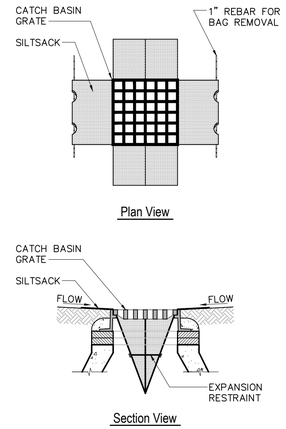

CONSTRUCTION NOTES

1. INSTALL SILT SACKS IN ALL CATCH BASINS WHERE INDICATED ON THE SITE PLANS BEFORE COMMENCING WORK OR IN PAVED AREAS AFTER BINDER COURSE IS PLACED AND HAY BALES HAVE BEEN REMOVED.
2. GRATE TO BE PLACED OVER SILT SACK.
3. SILT SACKS SHALL BE INSPECTED PERIODICALLY AND AFTER ALL STORM EVENTS. CLEANING OR REPLACEMENT SHALL BE PERFORMED AS NEEDED. MAINTAIN SILT SACKS UNTIL UPSTREAM AREAS HAVE BEEN PERMANENTLY STABILIZED.

SILT SACK

SCALE: N.T.S.

C-4.2

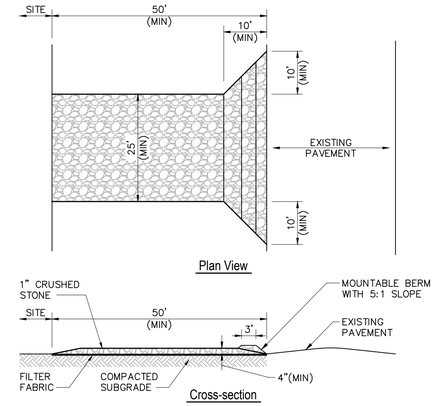

CONSTRUCTION NOTES

1. ENTRANCE WIDTH SHALL BE A TWENTY-FIVE (25) FOOT MINIMUM, BUT NOT LESS THAN THE FULL WIDTH AT POINTS WHERE INGRESS OR EGRESS OCCURS.
2. THE ENTRANCE SHALL BE MAINTAINED IN A CONDITION WHICH SHALL PREVENT TRACKING OR FLOWING OF SEDIMENT ONTO PUBLIC RIGHTS-OF-WAY. THIS MAY REQUIRE PERIODIC TOP DRESSING WITH ADDITIONAL STONE AS CONDITIONS DEMAND AND REPAIR OR CLEANOUT OF ANY MEASURES USED TO TRAP SEDIMENT. ALL SEDIMENT SPILLED, DROPPED, WASHED OR TRACKED ONTO PUBLIC RIGHTS-OF-WAY MUST BE REMOVED IMMEDIATELY. PERIODIC INSPECTION AND MAINTENANCE SHALL BE PROVIDED AS NEEDED.
3. STABILIZED CONSTRUCTION ENTRANCE SHALL BE REMOVED PRIOR TO FINAL FINISHED MATERIALS BEING INSTALLED.

STABILIZED CONSTRUCTION EXIT

SCALE: N.T.S.

C-4.1

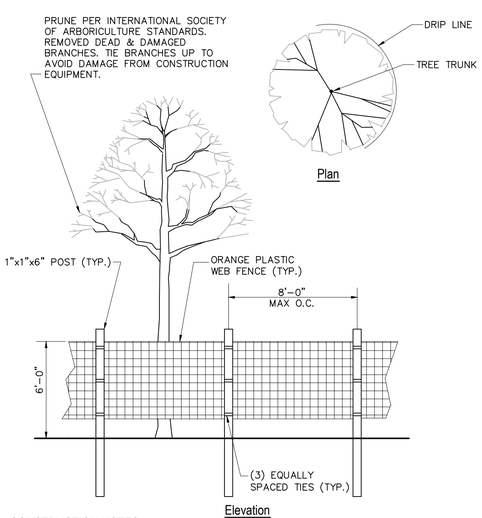

CONSTRUCTION NOTES

1. INSTALL TREE PROTECTION FENCE AT THE DRIP LINE OF EXISTING TREES TO REMAIN
2. IF DRIP LINES OVERLAP, INSTALL CONTINUOUS PROTECTION FENCE FOR MULTIPLE EXISTING TREE TO REMAIN.

TREE PROTECTION FENCE

SCALE: N.T.S.

C-4.1

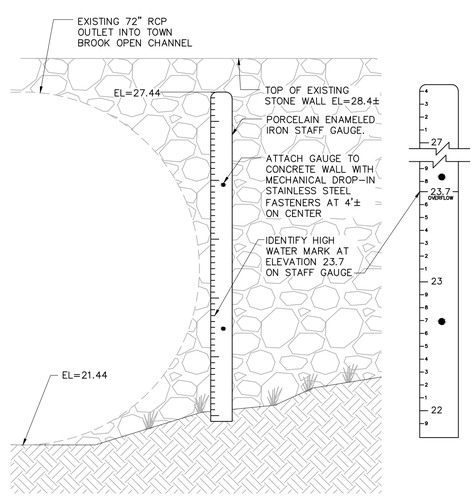

CONSTRUCTION NOTES

1. CONTRACTOR TO SET STAFF GAUGE TO REFLECT ACTUAL ELEVATIONS PER NAVD 88 WITH ASSISTANCE OF SURVEYOR TO PROPERLY CALIBRATE FINAL VERTICAL LOCATION.

STAFF GAUGE DETAIL

SCALE: N.T.S.

C-6.3

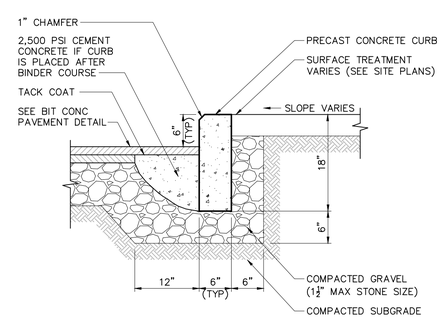

PRECAST CONCRETE CURB (PCC)

SCALE: N.T.S.

C-4.3

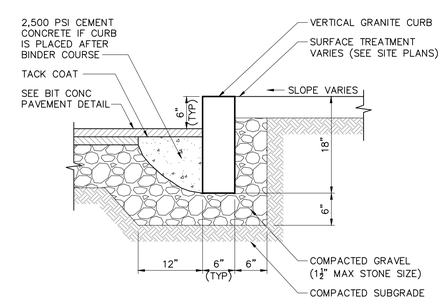

VERTICAL GRANITE CURB (VGC)

SCALE: N.T.S.

C-4.2

EBI Consulting
environmental | engineering | due diligence
21 B Street | Burlington, MA 01803
Tel: 781.273.2500 | Fax: 781.273.3311
www.ebiconsulting.com

COMMONWEALTH OF MASSACHUSETTS KARLIS SKULTE CIVIL No. 47703 REGISTERED PROFESSIONAL ENGINEER 5/6/2013

PREPARED FOR:
City of Quincy
1305 Hancock Street
Quincy, MA 02169
Tel: (617) 376-1362
Fax: (617) 376-1097

THIS DOCUMENT IS THE DESIGN PROPERTY AND COPYRIGHT OF EBI CONSULTING, INC. AND FOR THE EXCLUSIVE USE BY THE TITLE CLIENT. ANY DUPLICATION OR USE WITHOUT EXPRESS WRITTEN CONSENT OF THE CREATOR IS STRICTLY PROHIBITED.

DRAWING SCALES NOTED ARE FOR 22" x 34" SIZE PRINTED MEDIA ONLY. ALL OTHER PRINTED SIZES ARE DEEMED "NOT TO SCALE".

SUBMITTALS

NO.	DATE	DESCRIPTION	BY

DATE: May 6, 2013
PROJECT NUMBER: 16120008

PROJECT TITLE:
Town Brook Base Flow Recapture Improvements
Centre Street
Quincy, Massachusetts 02169
Norfolk County

ISSUED FOR: Bidding

SHEET TITLE:
Site Details 3

SCALE: N.T.S.
DESIGNED BY: MVG/JVC
CHECKED BY: KPS/BKF

SHEET NO: C-5.3

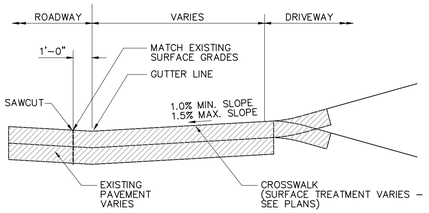

Section A-A

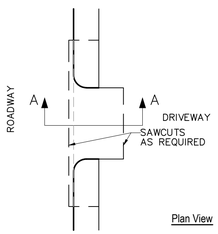

Plan View

CONSTRUCTION NOTES

SEE PLANS FOR EXACT SIDEWALK CONFIGURATION

DRIVEWAY ENTRANCE SECTION DETAIL

SCALE: N.T.S.

C-4.2

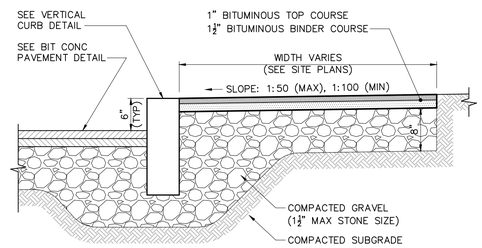

CONSTRUCTION NOTES

1. FOR ACCESSIBLE ROUTES, SIDEWALKS SHALL CONFORM TO THE REQUIREMENTS SET FORTH IN THE AMERICANS WITH DISABILITIES ACT (ADA) STANDARDS FOR ACCESSIBLE DESIGN AND THE MASSACHUSETTS ARCHITECTURAL ACCESS BOARD (AAB) RULES AND REGULATIONS (521 CMR).
2. FOR ACCESSIBLE ROUTES, THE RUNNING SLOPE OF WALKING SURFACES SHALL NOT BE GREATER THAN 1:20. THE CROSS SLOPE OF WALKING SURFACES SHALL NOT BE GREATER THAN 1:50 OR LESS THAN 1:100.
3. FOR ACCESSIBLE ROUTES, WHERE THE SIDEWALK IS LESS THAN FIVE (5) FEET IN WIDTH, EXCLUDING CURBING, A 5' X 5' PASSING AREA SHALL BE PROVIDED AT INTERVALS NOT TO EXCEED 200 FEET.
4. FOR ACCESSIBLE ROUTES, A MINIMUM CLEARANCE OF THREE (3) FEET SHALL BE MAINTAINED AT ANY PERMANENT OBSTACLE; HYDRANTS, UTILITY POLES, SIGN POSTS, ETC.

BITUMINOUS CONCRETE SIDEWALK

SCALE: N.T.S.

C-4.2

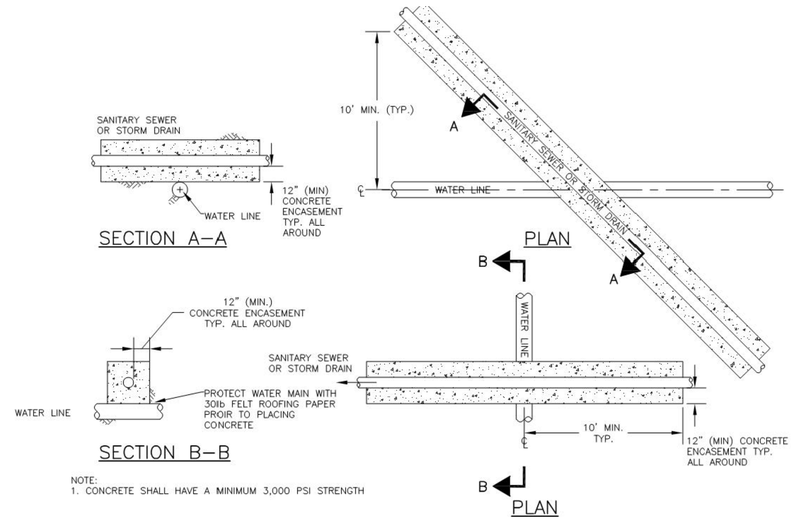

NOTE:
1. CONCRETE SHALL HAVE A MINIMUM 3,000 PSI STRENGTH

CONCRETE ENCASEMENT DETAIL

SCALE: N.T.S.

C-4.2

EBI Consulting
environmental | engineering | due diligence
21 B Street | Burlington, MA 01803
Tel: 781.273.2500 | Fax: 781.273.3311
www.ebiconsulting.com

COMMONWEALTH OF MASSACHUSETTS
KARLIS SKULTE
CIVIL
No. 47703
REGISTERED PROFESSIONAL ENGINEER
5/6/2013

PREPARED FOR:
City of Quincy

1305 Hancock Street
Quincy, MA 02169
Tel: (617) 376-1362
Fax: (617) 376-1097

THIS DOCUMENT IS THE DESIGN PROPERTY AND COPYRIGHT OF EBI CONSULTING, INC. AND FOR THE EXCLUSIVE USE BY THE TITLE CLIENT. ANY DUPLICATION OR USE WITHOUT EXPRESS WRITTEN CONSENT OF THE CREATOR IS STRICTLY PROHIBITED.

DRAWING SCALES NOTED ARE FOR 22" x 34" SIZE PRINTED MEDIA ONLY. ALL OTHER PRINTED SIZES ARE DEEMED "NOT TO SCALE".

SUBMITTALS

NO.	DATE	DESCRIPTION	BY

DATE: May 6, 2013
PROJECT NUMBER: 16120008

PROJECT TITLE:
Town Brook Base Flow Recapture Improvements

Centre Street
Quincy, Massachusetts 02169
Norfolk County

ISSUED FOR: Bidding

SHEET TITLE:
Site Details 4

SCALE: N.T.S.
DESIGNED BY: MVG/JVC
CHECKED BY: KPS/BKF

SHEET NO: C-5.4

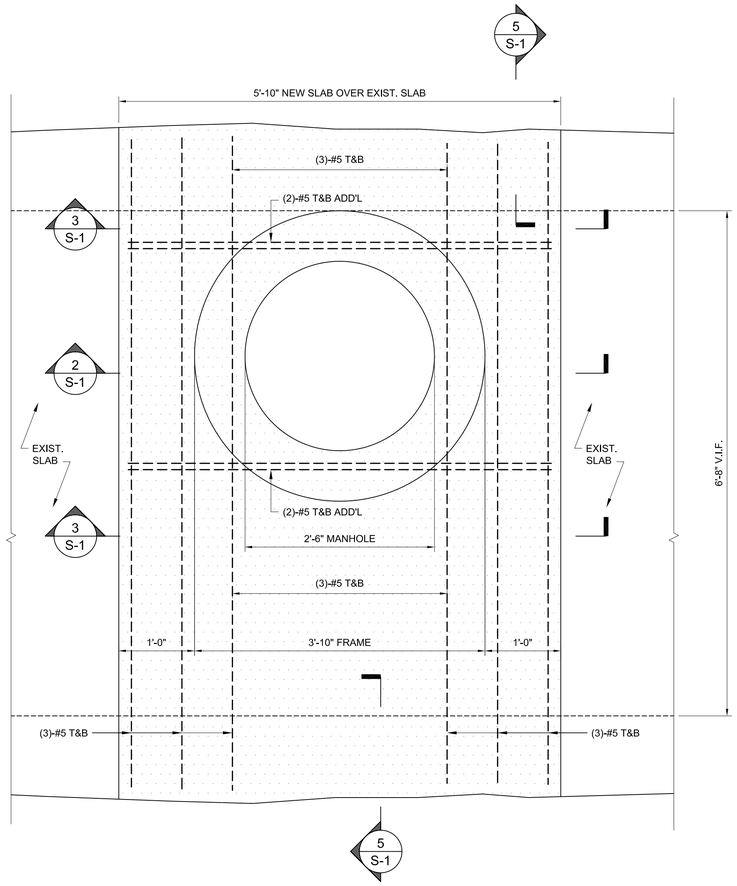

PLAN AT TOP OF EXIST. CULVERT (A / S-1)
1"=1'-0"

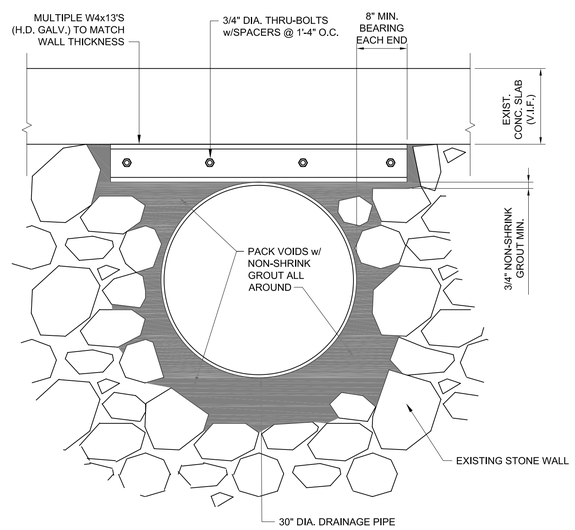

SECTION AT DRAIN PIPE (1 / S-1)
1"=1'-0"

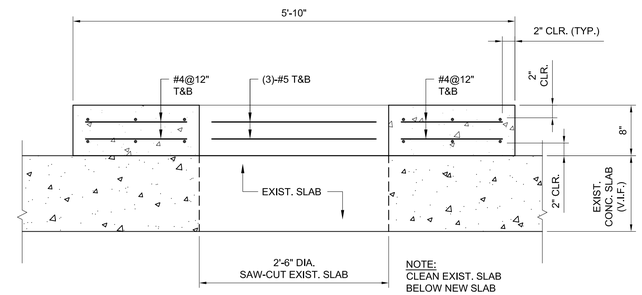

SECTION (2 / S-1)
1"=1'-0"

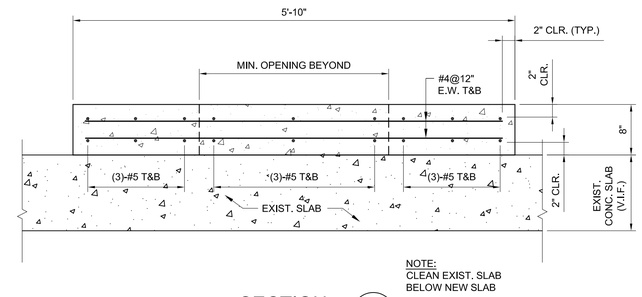

SECTION (3 / S-1)
1"=1'-0"

GENERAL NOTES

BUILDING CODE

MASSACHUSETTS STATE BUILDING CODE (8th EDITION)

LOADS

LIVE LOADS:
CULVERT:
SOIL = 130 PSF
LIVE = 250 PSF (AASHTO H20)

CONCRETE

CONCRETE WORK AND REINFORCING BAR DETAILS SHALL CONFORM TO THE LATEST A.C.I. CODE AND MANUAL.

MINIMUM 28 DAY STRENGTH 3,000 PSI AIR ENTRAINED.

MECHANICALLY VIBRATE ALL CONCRETE WHEN PLACED.

FLY ASH - IF PERMITTED BY ARCHITECTURAL SPECIFICATIONS, SHALL BE LIMITED TO 18% OF CEMENTITIOUS MATERIALS AND SHALL HAVE A REPLACEMENT FACTOR OF 1.2 RELATIVE TO CEMENT REPLACED.

ALL OPENINGS IN SLABS ARE NOT SHOWN. VERIFY SIZES AND LOCATIONS WITH CIVIL DRAWINGS.

REINFORCING

ASTM A615 (Fy = 60 KSI) DEFORMED BARS FOR ALL BARS.

NO TACK WELDING OF REINFORCING BARS ALLOWED WITHOUT PRIOR REVIEW OF PROCEDURE WITH THE STRUCTURAL ENGINEER.

LATEST ACI CODE AND DETAILING MANUAL APPLY. CLEAR CONCRETE COVERAGES AS FOLLOWS:

CAST AGAINST AND PERMANENTLY EXPOSED TO EARTH ---------- 3"
EXPOSED TO EARTH OR WEATHER:
#6 OR LARGER ---------- 2"
#5 AND SMALLER ---------- 1 1/2"
ALL OTHER PER LATEST EDITION OF ACI 318.

LAP SPLICES IN CONCRETE

LAP SPLICES, UNLESS OTHERWISE NOTED, SHALL BE 48 BAR DIAMETERS IN LENGTH MINIMUM.

ALL SPLICE LOCATIONS SUBJECT TO APPROVAL BY THE STRUCTURAL ENGINEER.

REINFORCING BAR SPACINGS GIVEN ARE MAXIMUM ON CENTERS. ALL BARS PER CRSI SPECIFICATIONS AND HANDBOOK.SECURELY TIE ALL BARS IN LOCATION BEFORE PLACING CONCRETE.

SHOP DRAWINGS

SHOP DRAWINGS SHALL BE SUBMITTED FOR CONCRETE REINFORCING STEEL.

THE CONTRACTOR SHALL REVIEW ALL SHOP DRAWINGS PRIOR TO SUBMITTAL. THE SUBMITTAL SHALL BEAR SIGNED REVIEW STAMP OF THE CONTRACTOR. SUBMITTALS WITHOUT THIS STAMP WILL BE RETURNED WITHOUT REVIEW. ITEMS NOT IN ACCORDANCE WITH CONTRACT DOCUMENTS SHALL BE FLAGGED UPON HIS REVIEW.

ALL DIMENSIONS TO BE VERIFIED WITH CIVIL ENGINEER.

ANY CHANGES, SUBSTITUTIONS, OR DEVIATIONS FROM CONTRACT DOCUMENTS SHALL BE CLOUDED BY MANUFACTURER OR FABRICATOR. ANY OF THE AFOREMENTIONED WHICH ARE NOT CLOUDED OR FLAGGED BY SUBMITTING PARTIES, SHALL NOT BE CONSIDERED APPROVED AFTER ENGINEER'S REVIEW, UNLESS NOTED ACCORDINGLY.

THE ENGINEER HAS THE RIGHT TO APPROVE OR DISAPPROVE ANY CHANGES TO CONTRACT DOCUMENTS AT ANYTIME BEFORE OR AFTER SHOP DRAWING REVIEW.

THE SHOP DRAWINGS DO NOT REPLACE THE CONTRACT DOCUMENTS. ITEMS OMITTED OR SHOWN INCORRECTLY AND ARE NOT FLAGGED BY THE STRUCTURAL ENGINEER ARE NOT TO BE CONSIDERED CHANGES TO CONTRACT DOCUMENTS. IT IS THE CONTRACTOR'S RESPONSIBILITY TO MAKE SURE ITEMS ARE CONSTRUCTED TO CONTRACT DOCUMENTS.

THE ADEQUACY OF ENGINEERING DESIGNS AND LAYOUT PERFORMED BY OTHERS RESTS WITH THE DESIGNING OR SUBMITTING AUTHORITY.

REVIEWING IS INTENDED ONLY AS AN AID TO THE CONTRACTOR IN OBTAINING CORRECT SHOP DRAWINGS. RESPONSIBILITY FOR CORRECTNESS SHALL REST WITH THE CONTRACTOR.

SHOP DRAWINGS SHALL BE SUBMITTED IN A TIMELY FASHION TO ALLOW 10 WORKING DAYS FOR THE ARCHITECTS REVIEW.

GROUT

GROUT SHALL BE 5,000 PSI NON-SHRINK GROUT, FIVE STAR OR EQUIVALENT.
INSTALL GROUT UNDER BEARING PLATES BEFORE FRAMING MEMBER IS INSTALLED.
AT COLUMNS, INSTALL GROUT UNDER BASEPLATES AFTER COLUMN HAS BEEN PLUMBED BUT GROUT UNDER BASEPLATES AFTER COLUMN HAS BEEN PLUMBED BUT PRIOR TO FLOOR OR ROOF INSTALLATION.

STRUCTURAL STEEL

ALL STRUCTURAL STEEL SHALL BE ASTM A992 (Fy=50 KSI).

ALL BOLTS SHALL BE ASTM A325, UNLESS NOTED OTHERWISE. ALL CONSTRUCTION PER LATEST AISC HANDBOOK.

ALL EXPANSION AND EPOXY BOLTS TO HAVE I.C.B.O. RATING FOR MATERIAL INTO WHICH INSTALLATION TAKES PLACE.

ALL BOLTS, ANCHOR BOLTS, EXPANSION BOLTS, ETC. SHALL BE INSTALLED WITH STEEL WASHERS AT FACE OF WOOD OR AT SLOTTED HOLES IN STEEL SECTIONS.

ALL WELDING SHALL BE PERFORMED BY WELDERS HOLDING VALID CERTIFICATES AND HAVING CURRENT EXPERIENCE IN THE TYPE OF WELD SHOWN ON THE DRAWINGS OR NOTES. CERTIFICATES SHALL BE THOSE ISSUED BY AN ACCEPTED TESTING AGENCY.

ALL WELDING DONE BY E70 SERIES LOW HYDROGEN RODS UNLESS NOTED OTHERWISE.
ALL WELDING PER LATEST AMERICAN WELDING SOCIETY STANDARDS.

GENERAL

THE STRUCTURAL CONSTRUCTION DOCUMENTS REPRESENT THE FINISHED STRUCTURE. THEY DO NOT INDICATE THE METHOD OF CONSTRUCTION. THE CONTRACTOR SHALL PROVIDE ALL MEASURES NECESSARY TO PROTECT THE STRUCTURE DURING CONSTRUCTION. SUCH MEASURES SHALL INCLUDE, BUT NOT BE LIMITED TO, BRACING, SHORING FOR LOADS DUE TO CONSTRUCTION EQUIPMENT, ETC. THE STRUCTURAL ENGINEER SHALL NOT BE RESPONSIBLE FOR THE CONTRACTOR'S MEANS, METHODS, TECHNIQUES, SEQUENCES FOR PROCEDURE OF CONSTRUCTION, OR THE SAFETY PRECAUTIONS AND THE PROGRAMS INCIDENT THERETO (NOR SHALL OBSERVATION VISITS TO THE SITE INCLUDE INSPECTION OF THESE ITEMS).

CONSTRUCTION MATERIALS SHALL BE SPREAD OUT IF PLACED ON FRAMED CONSTRUCTION. LOAD SHALL NOT EXCEED THE DESIGN LIVE LOAD PER SQUARE FOOT.

WHERE REFERENCE IS MADE TO VARIOUS TEST STANDARDS FOR MATERIALS, SUCH STANDARDS SHALL BE THE LATEST EDITION AND/OR ADDENDA.

ESTABLISH AND VERIFY ALL OPENINGS AND INSERTS PRIOR TO CONSTRUCTION.

OPTIONS ARE FOR CONTRACTOR'S CONVENIENCE. IF HE CHOOSES AN OPTION, CONTRACTOR SHALL BE RESPONSIBLE FOR ALL NECESSARY CHANGES AND SHALL COORDINATE ALL DETAILS.

ALL DIMENSIONS SHALL BE VERIFIED WITH CIVIL DRAWINGS.

NOTES AND DETAILS ON DRAWINGS SHALL TAKE PRECEDENCE OVER GENERAL STRUCTURAL NOTES AND TYPICAL DETAILS. WHERE NO DETAILS ARE SHOWN, CONSTRUCTION SHALL CONFORM TO SIMILAR WORK ON THE PROJECT.

CONTRACTOR SHALL BE RESPONSIBLE FOR VERIFICATION OF ALL DIMENSIONS WITH CIVIL DRAWINGS PRIOR TO START OF CONSTRUCTION. RESOLVE ANY DISCREPANCY WITH THE CIVIL ENGINEER.

TYPICAL DETAILS MAY NOT NECESSARILY BE CUT ON PLANS, BUT APPLY UNLESS OTHERWISE NOTED.

WHERE DISCREPANCIES OCCUR BETWEEN PLANS, DETAILS, GENERAL STRUCTURAL NOTES AND SPECIFICATIONS, THE GREATER REQUIREMENTS SHALL GOVERN.

ANY ENGINEERING DESIGN, PROVIDED BY OTHERS AND SUBMITTED FOR REVIEW, SHALL BEAR THE SEAL OF AN ENGINEER REGISTERED IN THE STATE OF MASSACHUSETTS.

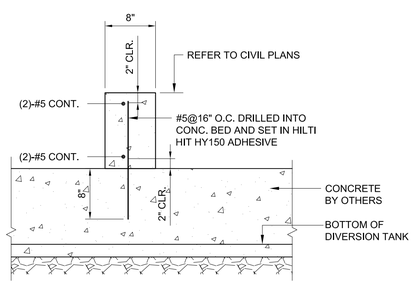

SECTION AT CONCRETE WEIR (4 / S-1)
1"=1'-0"

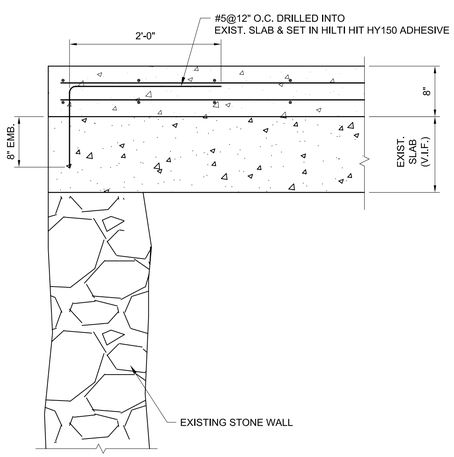

SECTION (5 / S-1)
1"=1'-0"

EBI Consulting
environmental | engineering | due diligence
21 B Street | Burlington, MA 01803
Tel: 781.273.2500 | Fax: 781.273.3311
www.ebiconsulting.com

COMMONWEALTH OF MASSACHUSETTS
PETER V. AMOLINS
STRUCTURAL
No. 33976
REGISTERED PROFESSIONAL ENGINEER

PREPARED FOR:
City of Quincy
1305 Hancock Street
Quincy, MA 02169
Tel: (617) 376-1362
Fax: (617) 376-1097

THIS DOCUMENT IS THE DESIGN PROPERTY AND COPYRIGHT OF EBI CONSULTING, INC. AND FOR THE EXCLUSIVE USE BY THE TITLE CLIENT. ANY DUPLICATION OR USE WITHOUT EXPRESS WRITTEN CONSENT OF THE CREATOR IS STRICTLY PROHIBITED.

DRAWING SCALES NOTED ARE FOR 22" x 34" SIZE PRINTED MEDIA ONLY. ALL OTHER PRINTED SIZES ARE DEEMED "NOT TO SCALE".

SUBMITTALS

NO.	DATE	DESCRIPTION	BY

DATE: May 6, 2013
PROJECT NUMBER: 16120008

PROJECT TITLE:
Town Brook Base Flow Recapture Improvements
Centre Street
Quincy, Massachusetts 02169
Norfolk County

ISSUED FOR: Bidding

SHEET TITLE:
Drainage Pipe Plan Section & Notes

AMOLINS
STRUCTURAL CONSULTANTS
1200 Providence Highway
Sharon, MA 02067
781.793.9933
781.793.9922 fax

SCALE: AS NOTED
DESIGNED BY: JWH
CHECKED BY: PVA
SHEET NO: S-1

NOTE:

1. THE LOCATION OF UNDERGROUND UTILITIES WAS TAKEN FROM THE BEST AVAILABLE INFORMATION AND IS NOT WARRANTED TO BE CORRECT, NOR THAT ALL UNDERGROUND UTILITIES ARE SHOWN. IT SHALL BE THE CONTRACTORS RESPONSIBILITY TO NOTIFY ALL UTILITY COMPANIES AND AGENCIES PRIOR TO CONSTRUCTION FOR THE LOCATION OF UNDERGROUND UTILITIES.

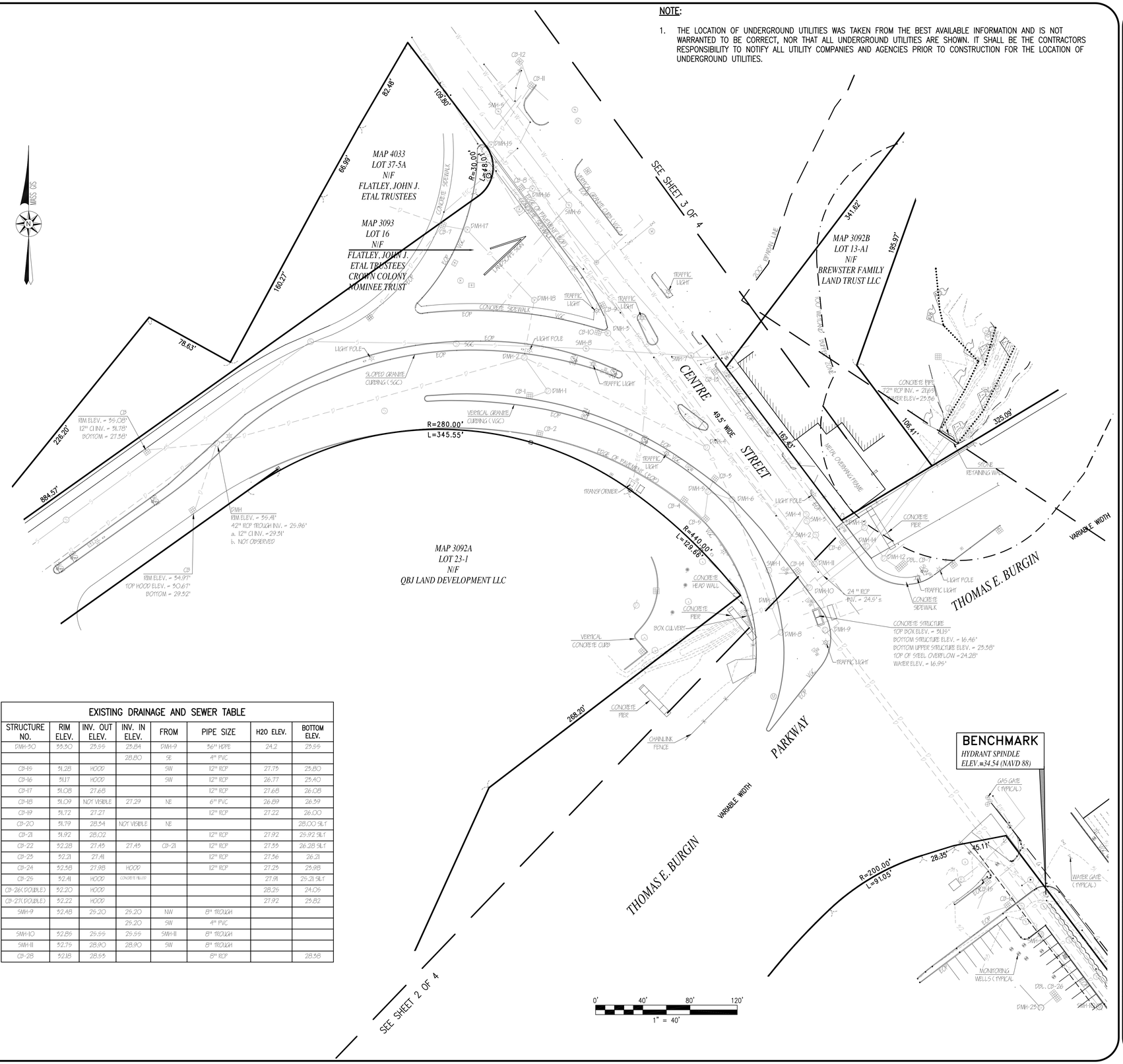

EXISTING DRAINAGE AND SEWER TABLE

STRUCTURE NO.	RIM ELEV.	INV. OUT ELEV.	INV. IN ELEV.	FROM	PIPE SIZE	H20 ELEV.	BOTTOM ELEV.
CB-1	32.07	28.17			12" RCP		
DMH-1	31.99	27.49	26.89	CB-1			
DMH-2	32.99	24.95	29.69	DMH-1	12" RCP		
			29.49	N			
			24.95	SW	42" RCP TROUGH		
DMH-3	31.66	27.76	28.66	NW	12" RCP		
			27.76	N	12" RCP		
DMH-4	30.79	24.64	29.59	DMH-3	12" RCP		
			24.64	DMH2	42" RCP TROUGH		
CB-2	31.38				12" RCP		
CB-3	30.87	26.32			12" RCP		
CB-4	29.82	27.17			12" RCP		
CB-5	29.99	26.59	26.44	CB-4	12" RCP		
DMH-5	30.42	25.62	25.62	CB-5	12" RCP		
			25.82	CB-3	12" RCP		
DMH-6	30.99	25.66	N/A	DMH-5	12" RCP		
			25.66	DMH-4	42" RCP TROUGH		
SMH-1	31.64	24.14			8" PVC FLOW LINE		
SMH-2	30.16	25.98	ABANDONED		8" PVC FLOW LINE		
SMH-3	30.20	25.35	25.35	SMH-2	12"-18" RCP FLOW LINE		
SMH-4	30.22	21.57	25.02	SMH-3	18" RCP		
			21.67	SMH-1	8" PVC		
			21.57	SE	15" RCP FLOW LINE		
DMH-7	31.40	25.61	25.61	DMH-6	42" RCP TROUGH		
DMH-8	31.74	25.56	25.56	DMH-7	C.I. TROUGH		
BOX CULVERT		26.69			24" x 24" RCP		
DMH-9	31.20	25.54	25.54	SE	48" CMP		
		24.3			WATER LEVEL		
DMH-10	29.76	24.26			WATER LEVEL 72" RCP	25.46	22.95
			24.81	NW	15" RCP		
			25.2±	DMH-9	48" CMP		
			25.95	BOX CULVERT	24" x 24" BOX CULVERT		
DMH-11	29.82				SILTED IN		
CB-6	29.70	24.55	24.65	CB-13	12" RCP	24.20	25.50
CB-7 (DOUBLE)	30.12	28.32			12" RCP		
DMH-12	31.33	28.45	28.55	CB-7	12" CI	25.25	21.85
			28.55	NE	12" CI		
			28.98	FROM ABOVE	8" CI		
DMH-13	32.40	28.40	28.32	CB-6	12" CI	28.20	27.90
DMH-14	31.51	25.22	25.22	DMH-10	72" RCP	25.41	22.01
DMH-15	32.65	26.55	26.95	NW	24" RCP TROUGH	28.05	27.94
			27.88	CB-11	12" RCP		
DMH-16	32.32		29.12	CB-8	12" RCP	28.42	28.12 SILT
		29.02			10" CLAY		
DMH-17	33.38		28.18	CB-7	12" RCP	28.08	27.38
		28.13		DMH-18	12" RCP		
DMH-18	33.02		HOOD	DMH-2	12" RCP	27.72	26.92
		27.67		DMH-17	12" RCP		
CB-7	32.18	28.38		DMH-17	12" RCP		SILTED
			28.38	NW	12" RCP		
			30.48	SW	6" CLAY		
CB-8	32.17	29.52		DMH-16	12" RCP		27.17 SILT
CB-9	31.25	29.05		DMH-3	12" RCP		SILTED
CB-10	31.75			DMH-3			
CB-11	33.09	HOOD		DMH-15	12" RCP	29.59	27.49
			30.49	CB-12	8" CLAY		
CB-12	32.78	29.58		CB-11	8" CLAY	30.08	29.48
CB-13	30.63	27.78		CB-6	12" RCP	27.63	27.03
SMH-5	33.09	22.53	22.53	NW	10" RCP TROUGH		
SMH-6	32.25	22.85	22.85	SMH-7	10" RCP TROUGH		
			23.05	SW	8" PVC		
SMH-7	31.09	21.23	21.23	NE	18" RCP		
			21.40	SMH-8	12" RCP		
SMH-8	32.27	22.61	22.73	WEST	12" RCP		
CB-14	29.52	25.72	26.00	NW	15" RCP	25.62	24.62 SILT
DMH-19	33.22	25.57	25.57	NW	48" CMP TROUGH	24.72	23.57
			25.30	15" RCP			
DMH-20	33.23	25.75	25.75	DMH-19	48" CMP TROUGH		
			24.57	DMH-26	36" RCP		
DMH-21	32.54		24.04	DMH-20	48" CMP	24.59	24.01
DMH-22	32.52		23.93	DMH-20	48" CMP	24.57	23.93
			27.02	CB-23	CONCRETE FILLED PIPE		
DMH-23	32.43	26.38	27.93	DBL.-CB-26	12" HDPE		26.33
			26.54	NW	12"HDPE		
DMH-24	32.86	25.26	25.33	DMH-20	30" HDPE	24.06	16.66 SILT
DMH-25	32.93	23.93	23.93	DMH-24	30" HDPE	24.33	24.03
DMH-26	31.49	25.54	25.74	NE	12" RCP		24.94
			26.64	CB-19	12" RCP		
			26.79	NE	12" RCP		
			26.54	CB-18	12" RCP		
DMH-27	32.59	(A) 23.99				24.89	23.19
DMH-28	32.64	26.79	27.16	NE	12" RCP		27.14
			28.19	SE	12" RCP		
			30.14	CB-24			
			27.24	PIPE REPLACEMENT CB-24	12" RCP		
DMH-29	32.47	29.67	29.77	DMH-28	12" RCP	29.67	22.87

EXISTING DRAINAGE AND SEWER TABLE

STRUCTURE NO.	RIM ELEV.	INV. OUT ELEV.	INV. IN ELEV.	FROM	PIPE SIZE	H20 ELEV.	BOTTOM ELEV.
DMH-30	33.30	25.55	25.84	DMH-9	36" HDPE	24.2	23.55
			28.80	SE	4" PVC		
CB-15	31.28	HOOD		SW	12" RCP	27.75	25.80
CB-16	31.17	HOOD		SW	12" RCP	26.77	25.40
CB-17	31.08	27.68			12" RCP	27.68	26.08
CB-18	31.09	NOT VISIBLE	27.29	NE	6" PVC	26.89	26.59
CB-19	31.72	27.27			12" RCP	27.22	26.00
CB-20	31.79	28.54	NOT VISIBLE	NE			28.00 SILT
CB-21	31.92	28.02			12" RCP	27.92	25.92 SILT
CB-22	32.28	27.45	27.45	CB-21	12" RCP	27.55	26.28 SILT
CB-23	32.21	27.41			12" RCP	27.36	26.21
CB-24	32.38	27.98	HOOD		12" RCP	27.25	25.98
CB-25	32.41	HOOD	CONCRETE FILLED			27.91	25.21 SILT
CB-26 (DOUBLE)	32.20	HOOD				28.25	24.05
CB-27 (DOUBLE)	32.22	HOOD				27.92	25.82
SMH-9	32.48	25.20	25.20	NW	8" TROUGH		
			25.20	SW	4" PVC		
SMH-10	32.85	25.55	25.55	SMH-11	8" TROUGH		
SMH-11	32.75	28.90	28.90	SW	8" TROUGH		
CB-28	32.18	28.55			8" RCP		28.58

REVISIONS

THOMPSONFARLAND
PROFESSIONAL ENGINEERS // LAND SURVEYORS
www.ThompsonFarland.com
(MAIN OFFICE) 398 COUNTY STREET, NEW BEDFORD, MA 02740 P.508.717.3479
NEW BEDFORD | TAUNTON | CAMBRIDGE | MARLBOROUGH

DRAWN BY: MOB/SMB

CHECKED BY: BJM

EXISTING CONDITIONS

TOWN BROOK ENHANCEMENT PROJECT
QUINCY, MASSACHUSETTS

PREPARED FOR: EBI CONSULTING
51 SLEEPER STREET, SUITE 600
BOSTON, MA 02210

JANUARY 14, 2013

SCALE: 1"=40'

JOB NO. 12-1189

LATEST REVISION:
APRIL 2, 2013

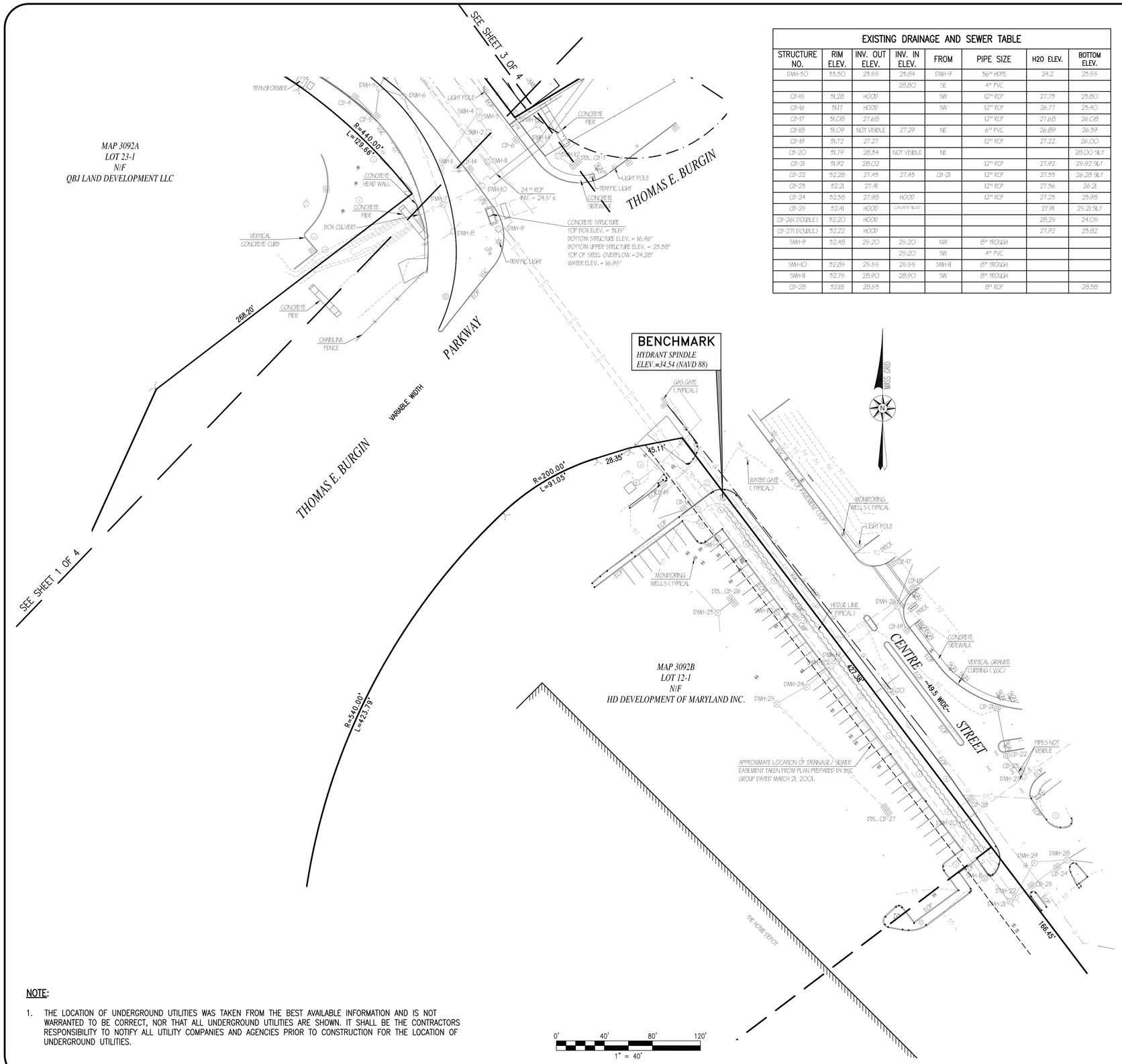

EXISTING DRAINAGE AND SEWER TABLE

STRUCTURE NO.	RIM ELEV.	INV. OUT ELEV.	INV. IN ELEV.	FROM	PIPE SIZE	H20 ELEV.	BOTTOM ELEV.
DMH-30	33.30	23.55	23.84	DMH-9	36" HDPE	24.2	23.55
			28.80	SE	4" PVC		
CB-15	31.28	HOOD		SW	12" RCP	27.75	25.80
CB-16	31.17	HOOD		SW	12" RCP	26.77	25.40
CB-17	31.08	27.68			12" RCP	27.68	26.08
CB-18	31.09	NOT VISIBLE	27.29	NE	6" PVC	26.89	26.59
CB-19	31.72	27.27			12" RCP	27.22	26.00
CB-20	31.79	28.34	NOT VISIBLE	NE			28.00 SILT
CB-21	31.92	28.02			12" RCP	27.92	25.92 SILT
CB-22	32.28	27.85	27.85	CB-21	12" RCP	27.55	26.28 SILT
CB-23	32.21	27.41			12" RCP	27.36	26.21
CB-24	32.38	27.98	HOOD		12" RCP	27.25	25.98
CB-25	32.41	HOOD	CONCRETE FILLED			27.19	25.21 SILT
CB-26 (DOUBLE)	32.20	HOOD				28.25	24.06
CB-27 (DOUBLE)	32.22	HOOD				27.92	25.82
SMH-9	32.48	29.20	29.20	NW	8" TROUGH		
			29.20	SW	4" PVC		
SMH-10	32.86	25.55	25.55	SMH-11	8" TROUGH		
SMH-11	32.75	28.90	28.90	SW	8" TROUGH		
CB-28	32.18	28.35			8" RCP		28.38

EXISTING DRAINAGE AND SEWER TABLE

STRUCTURE NO.	RIM ELEV.	INV. OUT ELEV.	INV. IN ELEV.	FROM	PIPE SIZE	H20 ELEV.	BOTTOM ELEV.
CB-1	32.07	28.17			12" RCP		
DMH-1	31.99	27.49	26.89	CB-1			
DMH-2	32.59	24.95	25.69	DMH-1	12" RCP		
			25.49	N			
			24.95	SW	42" RCP TROUGH		
DMH-3	31.66	27.76	28.66	NW	12" RCP		
			27.76	N	12" RCP		
DMH-4	30.79	24.64	25.59	DMH-3	12" RCP		
			24.64	DMH2	42" RCP TROUGH		
CB-2	31.38						
CB-3	30.97	26.32			12" RCP		
CB-4	29.82	27.17			12" RCP		
CB-5	29.99	26.39	26.44	CB-4	12" RCP		
DMH-5	30.42	25.62	25.62	CB-5	12" RCP		
			25.82	CB-3	12" RCP		
DMH-6	30.99	25.66	N/ A	DMH-5	12" RCP		
			25.66	DMH-4	42" RCP TROUGH		
SMH-1	31.64	24.14			8" PVC FLOW LINE		
SMH-2	30.16	25.98	ABANDONED		8" PVC FLOW LINE		
SMH-3	30.20	25.35	25.35	SMH-2	12"-18" RCP FLOW LINE		
SMH-4	30.22	21.37	25.02	SMH-3	18" RCP		
			21.67	SMH-1	8" PVC		
			21.37	SE	16" RCP FLOWLINE		
DMH-7	31.40	25.61	25.61	DMH-6	42" RCP TROUGH		
DMH-8	31.74	25.56	25.56	DMH-7	C.I. TROUGH		
BOX CULVERT		26.69			24" x 24" RCP		
DMH-9	31.20	25.34	25.34	SE	48" CMP		
		24.3			WATER LEVEL		
DMH-10	29.76	24.26			WATER LEVEL 72" RCP	25.46	22.95
			24.81	NW	15" RCP		
			25.2±	DMH-9	48" CMP		
			25.95	BOX CULVERT	24" x 24" BOX CULVERT		
DMH-11	29.82				SILTED IN		
CB-6	29.70	24.35	24.65	CB-15	12" RCP	24.20	25.50
CB-7 (DOUBLE)	30.12	28.52			12" RCP		
DMH-12	31.33	28.45	28.33	CB-7	12" CI	23.23	21.83
			28.33	NE	12" CI		
			28.98	FROM ABOVE	8" CI		
DMH-13	32.40	28.40	28.32	CB-6	12" CI	28.20	27.90
DMH-14	31.51	25.22	25.22	DMH-10	72" RCP	25.41	22.01
DMH-15	32.83	26.93	26.95	NW	24" RCP TROUGH	28.05	27.94
			27.88	CB-11	12" RCP		
DMH-16	32.52		29.12	CB-8	12" RCP	28.42	28.12 SILT
		29.02			10" CLAY		
DMH-17	33.38		28.18	CB-7	12" RCP	28.08	27.38
		28.15		DMH-18	12" RCP		
DMH-18	33.02		HOOD	DMH-2	12" RCP	27.72	26.92
		27.67		DMH-17	12" RCP		
CB-7	32.18	28.38		DMH-17	12" RCP		SILTED
			28.38	NW	12" RCP		
			30.48	SW	6" CLAY		
CB-8	32.17	29.92		DMH-16	12" RCP		27.17 SILT
CB-9	31.29	29.05		DMH-3	12" RCP		SILTED
CB-10	31.73			DMH-3			
CB-11	33.09	HOOD		DMH-15	12" RCP	29.59	27.49
			30.49	CB-12	8" CLAY		
CB-12	32.78	29.98		CB-11	8" CLAY	30.08	29.48
CB-13	30.65	27.78		CB-6	12" RCP	27.65	27.05
SMH-5	33.09	22.93	22.93	NW	10" RCP TROUGH		
SMH-6	32.25	22.86	22.86	SMH-7	10" RCP TROUGH		
			25.06	SW	8" PVC		
SMH-7	31.06	21.25	21.25	NE	18" RCP		
			21.40	SMH-8	12" RCP		
SMH-8	32.27	22.61	22.73	WEST	12" RCP		
CB-14	29.52	25.72	26.00	NW	15" RCP	25.62	24.62 SILT
DMH-19	35.22	25.57	25.57	NW	48" CMP TROUGH	24.72	25.57
			25.50	15" RCP			
DMH-20	35.25	25.75	25.75	DMH-19	48" CMP TROUGH		
			24.37	DMH-26	36" RCP		
DMH-21	32.54		24.04	DMH-30	48" CMP	24.59	24.01
DMH-22	32.82		25.95	DMH-20	48" CMP	24.57	25.95
			27.02	CB-25	CONCRETE FILLED PIPE		
DMH-23	32.45	26.38	27.95	DBL-CB-26	12" HDPE		26.35
			26.54	NW	12"HDPE		
DMH-24	32.96	25.26	25.35	DMH-30	30" HDPE	24.06	16.66 SILT
DMH-25	32.95	25.95	25.95	DMH-24	30" HDPE	24.55	24.05
DMH-26	31.49	25.54	25.74	NE	12" RCP		24.94
			26.64	CB-19	12" RCP		
			26.79	NE	12" RCP		
			26.54	CB-18	12" RCP		
DMH-27	32.59	(.A) 25.99				24.89	25.19
DMH-28	32.64	26.79	27.16	NE	12" RCP		27.14
			28.19	SE	12" RCP		
			30.14	CB-24			
			27.24	PIPE ROAD UNDER CB-24	12" RCP		
DMH-29	32.47	25.67	25.77	DMH-28	12" RCP	25.67	22.87

NOTE:

1. THE LOCATION OF UNDERGROUND UTILITIES WAS TAKEN FROM THE BEST AVAILABLE INFORMATION AND IS NOT WARRANTED TO BE CORRECT, NOR THAT ALL UNDERGROUND UTILITIES ARE SHOWN. IT SHALL BE THE CONTRACTORS RESPONSIBILITY TO NOTIFY ALL UTILITY COMPANIES AND AGENCIES PRIOR TO CONSTRUCTION FOR THE LOCATION OF UNDERGROUND UTILITIES.

REVISIONS

COMMONWEALTH OF MASSACHUSETTS
BRIAN J. MURPHY
No. 39824
REGISTERED PROFESSIONAL LAND SURVEYOR

THOMPSONFARLAND
PROFESSIONAL ENGINEERS // LAND SURVEYORS
www.ThompsonFarland.com
(MAIN OFFICE) 398 COUNTY STREET, NEW BEDFORD, MA 02740 P.508.717.3479
NEW BEDFORD | TAUNTON | CAMBRIDGE | MARLBOROUGH

DRAWN BY: MOB/SMB

CHECKED BY: BJM

EXISTING CONDITIONS

TOWN BROOK ENHANCEMENT PROJECT
QUINCY, MASSACHUSETTS

PREPARED FOR: EBI CONSULTING
51 SLEEPER STREET, SUITE 600
BOSTON, MA 02210

JANUARY 14, 2013

SCALE: 1"=40'

JOB NO. 12-1189

LATEST REVISION:
APRIL 2, 2013

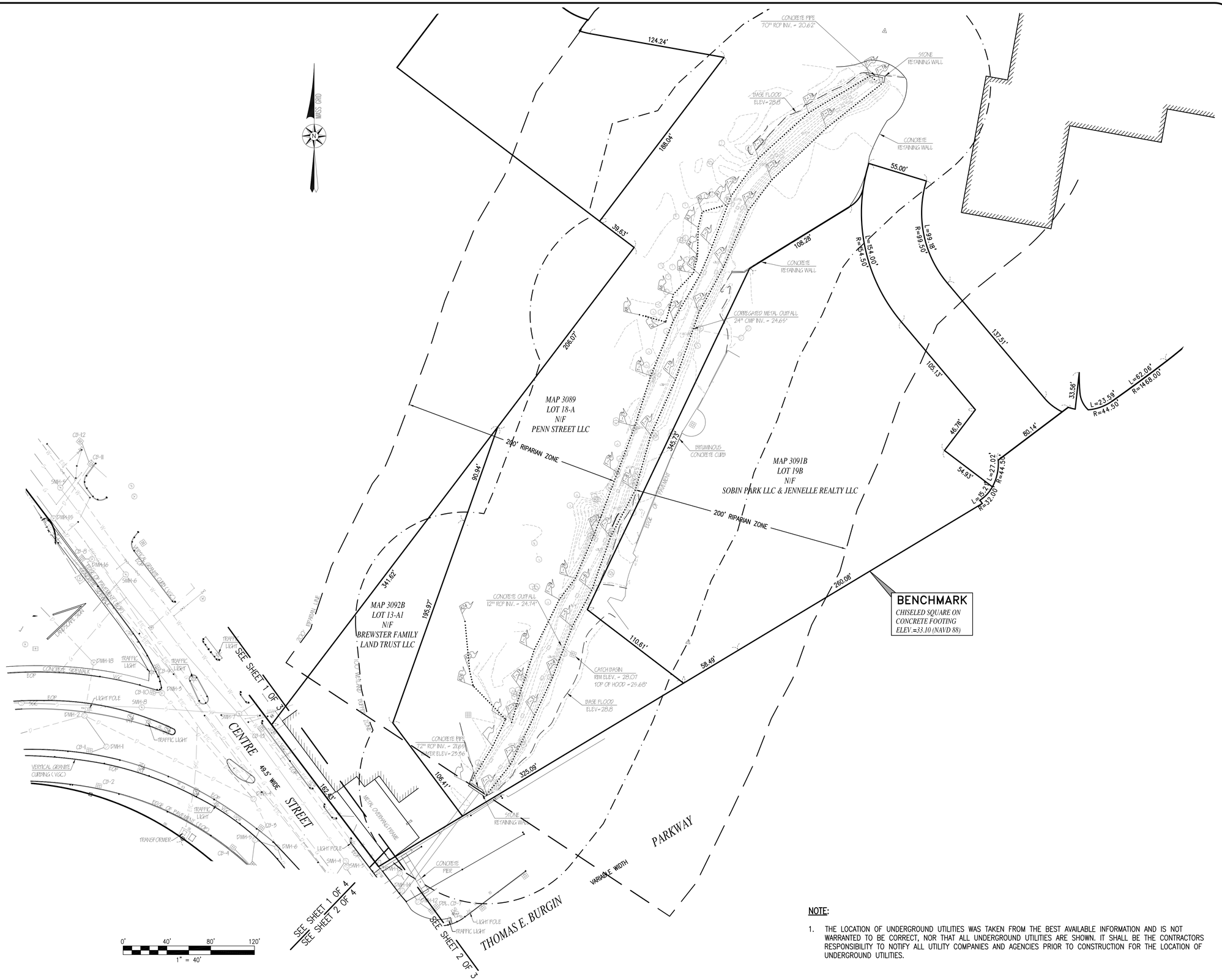

NOTE:

1. THE LOCATION OF UNDERGROUND UTILITIES WAS TAKEN FROM THE BEST AVAILABLE INFORMATION AND IS NOT WARRANTED TO BE CORRECT, NOR THAT ALL UNDERGROUND UTILITIES ARE SHOWN. IT SHALL BE THE CONTRACTORS RESPONSIBILITY TO NOTIFY ALL UTILITY COMPANIES AND AGENCIES PRIOR TO CONSTRUCTION FOR THE LOCATION OF UNDERGROUND UTILITIES.

REVISIONS

COMMONWEALTH OF MASSACHUSETTS
BRIAN J. MURPHY
No. 39874
REGISTERED PROFESSIONAL LAND SURVEYOR

THOMPSON FARLAND
PROFESSIONAL ENGINEERS // LAND SURVEYORS
www.ThompsonFarland.com
(MAIN OFFICE) 398 COUNTY STREET, NEW BEDFORD, MA 02740 P.508.717.3479
NEW BEDFORD | TAUNTON | CAMBRIDGE | MARLBOROUGH

DRAWN BY: MOB/SMB

CHECKED BY: BJM

EXISTING CONDITIONS

TOWN BROOK ENHANCEMENT PROJECT
QUINCY, MASSACHUSETTS

PREPARED FOR: EBI CONSULTING
51 SLEEPER STREET, SUITE 600
BOSTON, MA 02210

JANUARY 14, 2013

SCALE: 1"=40'

JOB NO. 12-1189

LATEST REVISION:
APRIL 2, 2013

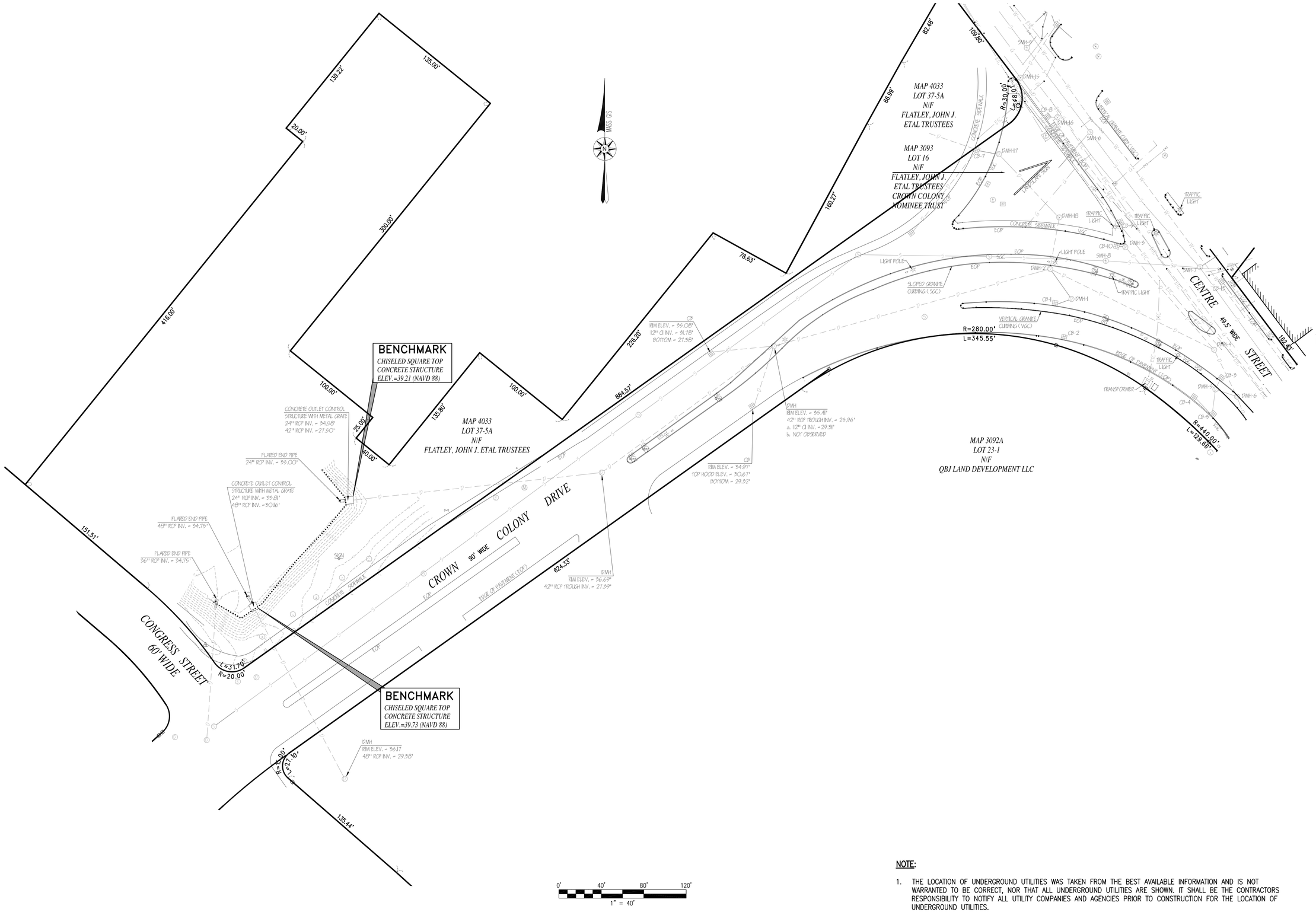

NOTE:

1. THE LOCATION OF UNDERGROUND UTILITIES WAS TAKEN FROM THE BEST AVAILABLE INFORMATION AND IS NOT WARRANTED TO BE CORRECT, NOR THAT ALL UNDERGROUND UTILITIES ARE SHOWN. IT SHALL BE THE CONTRACTORS RESPONSIBILITY TO NOTIFY ALL UTILITY COMPANIES AND AGENCIES PRIOR TO CONSTRUCTION FOR THE LOCATION OF UNDERGROUND UTILITIES.

REVISIONS

COMMONWEALTH OF MASSACHUSETTS
BRIAN J. MURPHY
No. 38987
REGISTERED PROFESSIONAL LAND SURVEYOR

THOMPSON FARLAND
PROFESSIONAL ENGINEERS // LAND SURVEYORS
www.ThompsonFarland.com
(MAIN OFFICE) 398 COUNTY STREET, NEW BEDFORD, MA 02740 P.508.717.3479
NEW BEDFORD | TAUNTON | CAMBRIDGE | MARLBOROUGH

DRAWN BY: MOB/SMB

CHECKED BY: BJM

EXISTING CONDITIONS

TOWN BROOK ENHANCEMENT PROJECT
QUINCY, MASSACHUSETTS

PREPARED FOR: EBI CONSULTING
51 SLEEPER STREET, SUITE 600
BOSTON, MA 02210

JANUARY 14, 2013

SCALE: 1"=40'

JOB NO. 12-1189

LATEST REVISION:
APRIL 2, 2013

SHEET 4 OF 4