SACHEM BROOK OUTFALL REPAIR PROJECT

ISSUED FOR BIDDING

WOLLASTON BEACH
QUINCY, MASSACHUSETTS
April 2015

SHEET NO.	TITLE	LAST REVISED
1	COVER SHEET	04/07/2015
2	NOTES AND LEGEND SHEET	04/07/2015
3	EXISTING CONDITIONS PLAN	04/07/2015
4	LIMITS OF WORK & IMPACTS	04/07/2015
5	LIMITS OF DEMOLITION	04/07/2015
6	PROPOSED CONDITIONS PLAN - PROFILE AND TYPICAL CROSS SECTION	04/07/2015

SCALE: 1:24000
LOCATION PLAN

MAYOR
THOMAS P. KOCH

DEPARTMENT OF PUBLIC WORKS

DANIEL RAYMONDI, COMMISSIONER

SHAWN HARDY, CITY ENGINEER

City of Quincy
DPW

Tighe&Bond
Consulting Engineers

COMMONWEALTH OF MASSACHUSETTS
DAVID A. MURPHY
CIVIL
No. 35482
REGISTERED PROFESSIONAL ENGINEER
4-8-15

COMMONWEALTH OF MASSACHUSETTS
JEAN E. CHRISTY
CIVIL
No. 47080
REGISTERED PROFESSIONAL ENGINEER
4-8-15

COMMONWEALTH OF MASSACHUSETTS
CRAIG S. FRENCH
STRUCTURAL
No. 45032
REGISTERED PROFESSIONAL ENGINEER
4.8.15

COMPLETE SET 6 SHEETS

PROJECT NAME AND LOCATION
SACHEM BROOK OUTFALL REPAIR PROJECT
QUINCY SHORE DRIVE 42°-16'-42"N
QUINCY, MA 02169 71°-00'-46"W

DESCRIPTION
THE PROJECT CONSISTS OF THE PARTIAL REPLACEMENT OF 80 FEET OF THE CONCRETE ENCASEMENT OF A DRAINAGE OUTFALL THAT RUNS FROM THE EXISTING SEAWALL OUT 170 FEET TOWARD THE WATER. THE WORK IS ANTICIPATED TO START IN WINTER OF 2014/2015, AND BE COMPLETED BY SPRING OF 2015.

DISTURBED AREA
THE TOTAL LIMIT OF WORK IS APPROXIMATELY 0.95 ACRES.

GENERAL NOTES:

1. EXISTING CONDITIONS DETAIL AND TOPOGRAPHY SHOWN HEREON ARE DERIVED FROM FIELD SURVEY PERFORMED BY DASILVA SURVEY SERVICES, ON NOVEMBER 13, 2013.
2. THE LIMITS OF THE PROJECT ARE BETWEEN THE TWO YACHT CLUBS ON WOLLASTON BEACH.
3. PROPERTY LINE CONFIGURATION AS SHOWN HEREON WAS COMPILED FROM RECORD PLANS AND ASSESSORS INFORMATION AND SUPPLEMENTED BY ON-THE-GROUND FIELD SURVEY BY DASILVA SURVEY SERVICES. BEING THAT A PROPERTY LINE RETRACEMENT OR VERIFICATION SURVEY HAS NOT BEEN PERFORMED BY DASILVA SURVEY SERVICES, TIGHE AND BOND NOR DASILVA SURVEY SERVICES BEARS RESPONSIBILITY FOR THE DEPICTION THEREOF.
4. PRIOR TO CONSTRUCTION, CONTRACTOR SHALL FIELD VERIFY EXISTING CONDITIONS ILLUSTRATED, AND ESTABLISH SURVEY CONTROL ADEQUATE TO RE-ESTABLISH EXISTING STRUCTURE/FEATURE POSITIONS/ELEVATIONS AND AS NECESSARY FOR NEW WORK LOCATION CONTROL.
5. LOCATION AND DEPTH OF UNDERGROUND UTILITIES IS APPROXIMATE ONLY AND IS NOT WARRANTED TO BE CORRECT. UNDERGROUND UTILITIES ARE SHOWN BASED ON A VISUAL INSPECTION OF SURFACE OBSERVABLE FEATURES ONLY AND HAVE BEEN FIELD INSPECTED FOR CONNECTIONS WHERE POSSIBLE. ADDITIONAL UTILITIES MAY EXIST WHICH ARE NOT INDICATED ON THESE PLANS. ALL EXISTING UTILITIES SHALL BE VERIFIED FOR SERVICE, SIZE, INVERT ELEVATION, LOCATIONS, ETC. PRIOR TO NEW CONNECTIONS TO OR RELOCATION OF SAME. CONTRACTOR MUST NOTIFY DIG-SAFE AT 1-888-344-7233 AT LEAST 72 HOURS PRIOR TO ANY CONSTRUCTION. NOTIFY DASILVA SURVEY AND THE ENGINEER IN WRITING OF ANY AND ALL DISCREPANCIES PRIOR TO COMMENCING ANY WORK.
6. THE PROJECT LIMITS ARE LOCATED IN A FLOOD ZONE VE (ELEV 12,13 & 14), FLOOD ZONE AE (ELEV 10) NAVD 1988 AND ZONE AO (DEPTH 2), AS INDICATED ON COMMUNITY PANEL NUMBER 25521900069E HAVING AN EFFECTIVE DATE OF JULY 17, 2012.
7. THE ELEVATIONS DEPICTED HEREON ARE REFERENCED TO THE NORTH AMERICAN VERTICAL DATUM OF 1988 (NAVD 88). HTL, MHTL, MLW, AND MLLW ARE BASED ON THE NATIONAL OCEANIC AND ATMOSPHERIC ADMINISTRATION TIDAL DATUM INFORMATION FOR NUT ISLAND, QUINCY BAY, MASSACHUSETTS STATION ID 8444525.
8. THE CONTRACTOR IS RESPONSIBLE FOR MAINTAINING THE SHORELINE WAVE PROTECTION FOR THE DURATION OF THE PROJECT INCLUDING PROTECTION OF THE STOCK PILES.
9. BEACH TEST PIT EXCAVATIONS WERE NOT PERFORMED TO DETERMINE THE EXTENT OF THE FOOTING OF THE OUTFALL STRUCTURE. INFORMATION WAS OBTAINED FROM RECORD PLANS PROVIDED BY THE CITY OF QUINCY.
10. THE CONTRACTOR SHALL NOT RELY ON SCALED DIMENSIONS AND SHALL CONTACT THE ENGINEER FOR CLARIFICATION IF A REQUIRED DIMENSION IS NOT PROVIDED ON THE PLANS.
11. THE CONTRACTOR SHALL BE RESPONSIBLE FOR CONSTRUCTION MEANS AND METHODS AND FOR SITE CONDITIONS THROUGHOUT CONSTRUCTION. NEITHER THE PLANS NOR THE SEAL OF THE ENGINEER AFFIXED HEREON EXTEND TO OR INCLUDE SYSTEMS REQUIRED FOR THE SAFETY OF THE CONTRACTOR, THEIR EMPLOYEES, AGENTS, OR REPRESENTATIVES IN THE PERFORMANCE OF THE WORK. THE CONTRACTOR SHALL BE RESPONSIBLE FOR DETERMINING AND IMPLEMENTING SAFETY PROCEDURES AND SYSTEMS AS REQUIRED BY THE UNITED STATES OCCUPATIONAL SAFETY AND HEALTH ADMINISTRATION (OSHA) AND ANY STATE OR LOCAL SAFETY REGULATIONS.
12. TIGHE & BOND ASSUMES NO RESPONSIBILITY FOR ANY ISSUES LEGAL OR OTHERWISE RESULTING FROM CHANGES MADE TO THESE DRAWINGS WITHOUT WRITTEN AUTHORIZATION OF TIGHE & BOND.
13. ALL WORK SHALL CONFORM TO THE CITY OF QUINCY DEPARTMENT OF PUBLIC WORKS, STANDARD SPECIFICATIONS UNLESS OTHERWISE NOTED.
14. HOURS OF WORK ARE TO BE DETERMINED BY THE CITY OF QUINCY
15. INSTALL EROSION CONTROL BARRIERS AS SHOWN AS FIRST ORDER OF WORK.
16. DAILY, OR AS REQUIRED, CONSTRUCT TEMPORARY BERMS, DRAINS, DITCHES, SILT FENCES, SEDIMENT TRAPS, ETC., MULCH AND SEED AS REQUIRED.
17. INSTALL STABILIZED CONSTRUCTION ENTRANCES AS NECESSARY.
18. INSPECT INLET PROTECTION AND EROSION CONTROL DAILY AND AFTER EACH RAIN STORM OF 0.25 INCH OR GREATER. REPAIR/MODIFY PROTECTION AS NECESSARY TO MAXIMIZE EFFICIENCY OF FILTER. REPLACE ALL FILTERS WHEN SEDIMENT IS 1/3 THE FILTER HEIGHT.
19. ALL DISTURBED AREAS ON THE LAND SIDE OF THE SEAWALL NOT TO BE PAVED OR OTHERWISE TREATED, INCLUDING BUT NOT LIMITED TO THE TEMPORARY CONSTRUCTION LAYDOWN/STAGING AREAS, SHALL RECEIVE 6" LOAM, SEED, AND/OR MULCH.
20. REMOVE EROSION AND SEDIMENT CONTROLS OUT OF THE WAVE ENVIRONMENT ON A DAILY/NIGHTLY BASIS WHEN NOT IN USE.
21. THE CONTRACTOR SHALL REMOVE AND PROPERLY DISPOSE OF ALL TEMPORARY EROSION CONTROL DEVICES UPON COMPLETION OF CONSTRUCTION AND AUTHORIZATION FROM THE CONSERVATION COMMISSION.
22. ALL CATCH BASIN SUMPS AND PIPING SHALL BE THOROUGHLY CLEANED TO REMOVE ALL SEDIMENT AND DEBRIS AFTER THE PROJECT HAS BEEN STABILIZED.
23. ANY TEMPORARY SEDIMENT STOCKPILE SHALL BE LOCATED AS FAR AS POSSIBLE FROM THE HTL.
24. TEMPORARY FENCING SHALL BE PROVIDED AROUND STOCKPILES OVER 10 FT AND AS NECESSARY TO RESTRICT PUBLIC ACCESS TO ACTIVE LAYDOWN AND STAGING AREAS AND AREAS UNDER CONSTRUCTION.
25. ALL STORM DRAIN CONSTRUCTION SHALL BE IN ACCORDANCE WITH THE MASSACHUSETTS HIGHWAY DEPARTMENT (MHD), STANDARD SPECIFICATIONS FOR HIGHWAYS AND BRIDGES, LATEST EDITION.
26. CONTRACTOR TO SUBMIT AS-BUILT PLANS ON REPRODUCIBLE MYLARS AND IN DIGITAL FORMAT (.DWG FILE) ON DISK TO THE OWNER AND ENGINEER UPON COMPLETION OF THE PROJECT. AS-BUILTS SHALL BE PREPARED AND CERTIFIED BY A LAND SURVEYOR OR PROFESSIONAL ENGINEER LICENSED IN THE COMMONWEALTH OF MASSACHUSETTS.
27. UNLESS WHERE NOTED ON THE PLANS, PUBLIC STREETS SHALL NOT BE USED FOR CONSTRUCTION LAYDOWN OR STAGING. ADDITIONAL LAYDOWN AREAS MAY BE AVAILABLE BY WRITTEN REQUEST FROM THE CITY OF QUINCY.
28. COASTAL BEACH IS DEFINED AS THE AREA BETWEEN THE LIMIT OF EXISTING REVETMENT AND THE MEAN LOW WATER (MLW) LINE.
29. THE CONTRACTOR SHALL NOT PERFORM WORK BEYOND THE LIMIT OF WORK AS SHOWN ON THE PLANS.
30. VEHICLES ARE PROHIBITED FROM WORKING BEYOND THE LIMIT OF WORK AS SHOWN ON THE PLANS.
31. STRUCTURAL WORK SHALL CONFORM TO MASSACHUSETTS DEPARTMENT OF TRANSPORTATION, STANDARD SPECIFICATIONS FOR HIGHWAYS AND BRIDGES, LATEST EDITION, INCLUDING MOST RECENT ADDENDA, AND CONTRACT DOCUMENTS. IN CASE OF CONFLICT, MOST STRINGENT REQUIREMENT SHALL GOVERN.
32. CONTRACTOR SHALL VERIFY AND COORDINATE DIMENSIONS RELATED TO THIS PROJECT.
33. CONTRACTOR SHALL EXAMINE DRAWINGS FOR ALL TRADES FOR THE VERIFICATION OF LOCATION AND DIMENSIONS OF ALL CHASES, INSERTS, OPENINGS, SLEEVES, AND OTHER PROJECT REQUIREMENTS NOT SHOWN ON THE STRUCTURAL DRAWINGS.
34. PROVIDE SEALANT AT ALL CONTROL JOINTS. PROVIDE COMPRESSIBLE FILLER AND SEALANT AT ALL EXPANSION AND ISOLATION JOINTS.
35. IF ANY PRIVATELY OWNED EXISTING FEATURES LOCATED ON PRIVATE PROPERTY ARE IMPACTED BY CONSTRUCTION THEY SHALL BE RESTORED TO THEIR PRE-CONSTRUCTION STATE PRIOR TO THE COMPLETION OF CONSTRUCTION.
36. THE ENGINEER, MASSACHUSETTS DEPARTMENT OF ENVIRONMENTAL PROTECTION (MADEP), AND MASSACHUSETTS DIVISION OF MARINE FISHERIES (DMF) SHALL BE NOTIFIED IMMEDIATELY IN THE EVENT A BREACH OF SEWAGE PIPES OR RELATED STRUCTURES OCCURS DURING CONSTRUCTION.
37. THE DMF SHALL BE NOTIFIED IF ANY BURIED SALT MARSH (E.G. PEAT AND VEGETATION SUCH AS SALT MARSH CORD GRASS) IS EXPOSED DURING EXCAVATION WORK ON THE SEAWARD SIDE OF THE SEAWALL.
38. ALL BACKFILL UNDER OR ADJACENT TO ANY PORTION OF THE STRUCTURES SHALL BE COMPACTED IN 6" LIFTS.
39. THE CONTRACTOR WILL BE RESPONSIBLE FOR THE MONITORING THE OUTFALL AND THE ADJACENT YACHT CLUB FOR VIBRATION AND MOVEMENT THROUGH THE CONSTRUCTION OPERATION. THE CONTRACTOR WILL PERFORM A THOROUGH INVESTIGATION AND WILL PROVIDE AN EXISTING CONDITIONS REPORT OF THE YACHT CLUB BEFORE AND AFTER CONSTRUCTION.
40. THE CONTRACTOR WILL BE RESPONSIBLE FOR PROVIDING PROTECTION FOR THE PORTION OF THE OUTFALL THAT IS BELOW GRADE AND EXTENDS FROM THE ENCASEMENT TO THE SEAWALL FROM EQUIPMENT AND MATERIAL LOADING AS NEEDED. A DETAILED SKETCH AND CALCULATIONS OF THE CONTRACTOR'S LOADING AND METHODS, STAMPED BY AN ENGINEER LICENSED IN THE STATE OF MASSACHUSETTS, SHALL BE SUBMITTED TO THE ENGINEER FOR APPROVAL PRIOR TO LOADING THE OUTFALL.
41. IN THE EVENT OF DAMAGE TO THE BEACH SURFACE, THE ENGINEER AND CITY OF QUINCY RESERVE THE RIGHT TO LIMIT THE CONSTRUCTION EQUIPMENT TO LOWGROUND PRESSURE ONLY.
42. ALL EXCAVATED MATERIAL MUST REMAIN ON-SITE.
43. INSTALLATION AND REMOVAL OF THE COFFERDAM AS WELL AS ALL DREDGING ACTIVITIES SHALL ONLY TAKE PLACE WITHIN 5 HOURS OF BEFORE OR AFTER LOW TIDE.

REINFORCEMENT:

1. DETAILING, FABRICATION, AND ERECTION OF REINFORCEMENT, UNLESS OTHERWISE NOTED, SHALL CONFORM TO ACI "BUILDING CODE REQUIREMENTS FOR REINFORCED CONCRETE (ACI 318)" AND ACI "MANUAL OF STANDARD PRACTICE FOR DETAILING REINFORCED CONCRETE STRUCTURES (ACI 315)", LATEST EDITION.
2. STEEL REINFORCEMENT, UNLESS OTHERWISE SHOWN, SHALL CONFORM TO ASTM A615 GRADE 60 MINIMUM (YIELD STRENGTH - 60,000 PSI). ALL STEEL REINFORCEMENT SHALL BE EPOXY COATED PER ASTM A775. BARS SHALL BE HANDLED AND REPAIRED WHERE NECESSARY IN ACCORDANCE WITH ASTM D3963.
3. PROVIDE AND SCHEDULE ON SHOP DRAWINGS, ALL NECESSARY ACCESSORIES TO HOLD REINFORCEMENT SECURELY IN POSITION: MINIMUM REQUIREMENTS SHALL BE: HIGH CHAIRS, 4'-0" ON CENTER, #5 SUPPORT BAR FOR HIGH CHAIRS, SLAB BOLSTERS, 3'-6" ON CENTER. ALL CHAIRS SHALL BE AZTEC CASTLE CHAIRS OR APPROVED EQUAL.
4. THE CONCRETE PROTECTIVE COVERING FOR REINFORCEMENT SHALL BE AS FOLLOWS, UNLESS OTHERWISE SHOWN:

(A) CAST-IN-PLACE CONCRETE.

	EXPOSED TO EARTH, WATER, OR WEATHER
(a.) SLAB ON GRADE	3 INCHES
(b.) COLUMN TIES	3 INCHES
(c.) COLUMN MAIN REBARS	3 INCHES
(d.) BEAM STIRRUPS	3 INCHES
(e.) BEAM MAIN REBARS	3 INCHES
(f.) SLAB/WALL #3 TO #5 INCL'S	3 INCHES
(g.) SLAB/WALL #6 TO #11 INCL'S	3 INCHES
(h.) WALL #11 BAR OR SMALLER	3 INCHES

(i.) NOTE: MAXIMUM DEVIATION FROM THESE REQUIREMENTS SHALL BE +1/4" FOR SECTIONS TEN (10) INCHES OR LESS, AND +1/2" FOR SECTIONS OVER TEN (10) INCHES THICK.

5. WHERE REINFORCEMENT IS NOT SHOWN ON DRAWINGS, PROVIDE REINFORCEMENT IN ACCORDANCE WITH APPLICABLE TYPICAL DETAILS OR SIMILAR TO THAT SHOWN FOR MOST NEARLY SIMILAR SITUATIONS, AS DETERMINED BY THE ENGINEER. IN NO CASE SHALL REINFORCEMENT BE LESS THAN MINIMUM REINFORCEMENT PERMITTED BY THE APPLICABLE CODES, NOR LESS THAN THE FOLLOWING:

(a.) BEAM STIRRUPS-#3 @ 12" OC
(b.) BEAM STIRRUP SUPPORTS-1-#5 @ EACH STIRRUP BEND
(c.) FACE REINFORCEMENT IN BEAMS OR PORTIONS OF BEAMS-#4 @ 12" EF
(d.) STRUCTURAL SLABS-.0028 GROSS CONCRETE AREA IN EACH DIRECTION
(e.) STRUCTURAL WALLS-.0028 GROSS CONCRETE AREA IN EACH DIRECTION

6. WHERE REINFORCEMENT IS CALLED FOR IN SECTION, REINFORCEMENT IS CONSIDERED TYPICAL WHEREVER THE SECTION APPLIES.
7. REINFORCEMENT SHALL BE CONTINUOUS THROUGH ALL CONSTRUCTION JOINTS UNLESS OTHERWISE INDICATED ON THE DRAWINGS.
8. WELDED WIRE FABRIC SHALL LAP 12" OR TWO SPACES, WHICHEVER IS LARGER, AND SHALL BE WIRED TOGETHER.
9. REINFORCEMENT COUPLER SPLICES SHALL BE MECHANICAL DEVICES CAPABLE OF TRANSMITTING THE ULTIMATE TENSILE AND COMPRESSIVE STRENGTH OF THE BAR.
10. INSTALLATION OF REINFORCEMENT SHALL BE COMPLETED AT LEAST 24 HOURS PRIOR TO SCHEDULED CONCRETE PLACEMENT. NOTIFY ENGINEER OF COMPLETION AT LEAST 24 HOURS PRIOR TO SCHEDULED COMPLETION OF PLACEMENT OR REINFORCEMENT.
11. REINFORCEMENT SHALL BE SET BEFORE PLACING CONCRETE. SETTING ANY REINFORCEMENT INTO WET CONCRETE IS PROHIBITED.
12. WHERE CONTINUOUS BARS ARE CALLED FOR THEY SHALL BE RUN CONTINUOUSLY AROUND CORNERS AND LAPPED AT NECESSARY SPLICES OF HOOKED AT DISCONTINUOUS ENDS.

CONCRETE:

1. CONCRETE WORK SHALL CONFORM TO THE LATEST EDITIONS OF THE BUILDING CODE REQUIREMENTS FOR REINFORCED CONCRETE (ACI 318) AND SPECIFICATIONS FOR STRUCTURAL CONCRETE FOR BUILDING (ACI 301) AND ACI 357R-84 GUIDE FOR THE DESIGN AND CONSTRUCTION OF FIXED OFFSHORE CONCRETE STRUCTURES. IN THE EVENT OF A CONTRADICTION, THE MORE STRINGENT REQUIREMENT SHALL APPLY.
2. CONCRETE SHALL BE CONTROLLED CONCRETE, PROPORTIONED, MIXED, AND PLACED UNDER THE SUPERVISION OF AN APPROVED CONCRETE TESTING AGENCY OR THE ENGINEER.
3. CONCRETE SHALL BE NORMAL WEIGHT CONCRETE AND SHALL HAVE A COMPRESSIVE STRENGTH OF 5,000 PSI AT 28 DAYS, UNLESS OTHERWISE NOTED, AND SHALL BE AIR ENTRAINED.
4. THE USE OF CONSTRUCTION JOINTS WHERE SHOWN ON THE DRAWINGS IS MANDATORY. OMISSIONS, ADDITIONS, OR CHANGES SHALL NOT BE MADE EXCEPT WITH THE SUBMISSION OF A WRITTEN REQUEST TOGETHER WITH DRAWINGS OF THE PROPOSED JOINT LOCATIONS FOR APPROVAL OF THE STRUCTURAL ENGINEER.
5. WHERE CONSTRUCTION JOINTS ARE NOT SHOWN, DRAWINGS SHOWING LOCATION OF CONSTRUCTION JOINTS AND CONCRETE PLACING SEQUENCE SHALL BE SUBMITTED TO THE ENGINEER FOR APPROVAL PRIOR TO PREPARATION OF THE REINFORCEMENT SHOP DRAWINGS.
6. CONCRETE SHALL BE PLACED WITHOUT HORIZONTAL CONSTRUCTION JOINTS EXCEPT WHERE SHOWN OR NOTED.
7. EXPOSED EDGES OF CONCRETE ELEMENTS SHALL HAVE CHAMFERED CORNERS.
8. CONCRETE SLABS AND WALLS SHALL BE CAST ALTERNATELY OR IN A CHECKERBOARD FASHION SO THAT ADJACENT SECTIONS ARE PLACED NO SOONER THAN THREE DAYS APART. AT LEAST TWO DAYS MUST ELAPSE AFTER PLACING CONCRETE IN WALLS BEFORE PLACING FLOOR SYSTEM SUPPORTED THEREON.
9. ONLY CRITICAL CONSTRUCTION JOINTS ARE SHOWN. SEE SPECIFICATION FOR REQUIRED MAXIMUM SPACING OF CONSTRUCTION JOINTS.
10. NO CONCRETE SHALL BE PLACED IN WATER OR ON FROZEN GROUND.

TIDAL ELEVATIONS:

1. THE ELEVATIONS NOTED BELOW ARE REFERENCED TO THE NORTH AMERICAN VERTICAL DATUM OF 1988 (NAVD 88) BASED ON TIDAL DATA REFERRED TO MEAN LOWER LOW WATER (MLLW) FOR NUT ISLAND, QUINCY BAY, MASSACHUSETTS STATION ID 8444525 AS PROVIDED BY THE NATIONAL OCEANIC AND ATMOSPHERIC ADMINISTRATION.

MEAN HIGH WATER (MHW) = 4.4'
MEAN LOW WATER (MLW) = -5.1'
MEAN HIGHER HIGH WATER (MHHW) = 4.8'
MEAN LOWER LOW WATER (MLLW) = -5.4'

NAME OF RECEIVING WATERS
THE STORM WATER RUNOFF FLOWING THROUGH THIS SITE IS COLLECTED UPSTREAM IN A CLOSED DRAINAGE SYSTEM AND OUTLETS TO THE QUINCY BAY.

SEQUENCE OF MAJOR ACTIVITIES

1. CONSTRUCT TEMPORARY SEDIMENT AND EROSION CONTROL MEASURES. EROSION AND SEDIMENT CONTROL MEASURES SHALL BE INSTALLED PRIOR TO ANY EARTH MOVING OPERATIONS THAT WILL INFLUENCE STORMWATER RUNOFF SUCH AS
   - NEW CONSTRUCTION
   - DISPOSAL OF SEDIMENT SPOIL, STUMP, AND OTHER SOLID WASTE
   - FLOOD PLAIN EXCAVATION WORK
   - CONTROL OF DUST
   - NEARNESS OF CONSTRUCTION SITE TO RECEIVING WATERS
   - CONSTRUCTION DURING LATE WINTER AND EARLY SPRING
2. CLEAR AND DISPOSE OF DEBRIS.
3. REMOVE EXISTING OUTFALL STRUCTURE
4. CONSTRUCT NEW OUTFALL STRUCTURE.
5. CONSTRUCT NEW TRASH RACK.
6. REMOVE TRAPPED SEDIMENTS FROM COLLECTOR DEVICES AS APPROPRIATE AND THEN REMOVE TEMPORARY EROSION CONTROL MEASURES.

NOTE: THE CONSTRUCTION SEQUENCE MUST LIMIT THE DURATION AND AREA OF DISTURBANCE.

EROSION AND SEDIMENT CONTROLS AND STABILIZATION PRACTICES

1. THE CONTRACTOR SHALL BE RESPONSIBLE FOR PROVIDING A MEANS OF DIVERTING ANY FLOW FROM THE EXISTING PIPE TO OUTSIDE OF THE COFFERDAM IN ACCORDANCE WITH ALL LOCAL, STATE, AND FEDERAL DISCHARGE REQUIREMENTS.
2. THE CONTRACTOR SHALL BE RESPONSIBLE FOR STABILIZING AND PROVIDING EROSION CONTROL MEASURES FOR THE STOCKPILED BEACH SAND TO PREVENT LOSS.

GENERAL INSPECTION AND MAINTENANCE PRACTICES FOR EROSION AND SEDIMENT CONTROLS

1. ALL MEASURES WILL BE MAINTAINED IN GOOD WORKING ORDER; IF A REPAIR IS NECESSARY, IT WILL BE INITIATED WITHIN 24 HOURS OF REPORT.
2. BUILT UP SEDIMENT WILL BE REMOVED FROM SILT FENCE OR HAYBALE BARRIERS WHEN IT HAS REACHED ONE THIRD (1/3) THE HEIGHT OF THE FENCE OR BALE.
3. A MAINTENANCE INSPECTION REPORT WILL BE MADE AFTER EACH INSPECTION.
4. A REPRESENTATIVE OF THE SITE CONTRACTOR WILL BE RESPONSIBLE FOR INSPECTIONS, MAINTENANCE AND REPAIR ACTIVITIES, AND FILLING OUT THE INSPECTION AND MAINTENANCE REPORT.
5. THE EROSION CONTROL PROCEDURES SHALL CONFORM TO THE "MASSACHUSETTS EROSION AND SEDIMENT CONTROL GUIDELINES FOR URBAN AND SUBURBAN AREAS" PREPARED BY THE FRANKLIN, HAMPDEN, HAMPSHIRE CONSERVATION DISTRICT.

(a.) ALL FILLS SHALL BE COMPACTED AS REQUIRED TO REDUCE EROSION, SLIPPAGE, SETTLEMENT, SUBSIDENCE, OR OTHER RELATED PROBLEMS. FILL INTENDED TO SUPPORT BUILDINGS, STRUCTURES, AND CONDUITS, ETC., SHALL BE COMPACTED IN ACCORDANCE WITH LOCAL CODES OR SPECIFICATIONS.
(b.) THE USE OF SAND FOR THE PURPOSE OF PEDESTRIAN SAFETY AND SAFE DRIVING CONDITION SHALL BE MINIMIZED.
(c.) THE OWNER SHALL CLEAN ALL CATCH BASINS, DRAIN MANHOLES, AND TIDE GATE STRUCTURES ON AN ANNUAL BASIS.

6. STREET SWEEPING:
   (a.) CONTRACTOR SHALL PERFORM WEEKLY SWEEPING OF PAVED AREAS UTILIZED FOR TEMPORARY CONSTRUCTION ACCESS OR WORK.
   (b.) CONTRACTOR SHALL DISPOSE OF STREET SWEEPING WASTE IN ACCORDANCE WITH ALL LOCAL, STATE, AND FEDERAL CODES AND LAWS.

CONCRETE WASHOUT AREA:

1. THE CONCRETE CONTRACTOR SHOULD BE ENCOURAGED, WHERE POSSIBLE, TO USE WASHOUT FACILITIES AT THEIR OWN PLANT OR DISPATCH FACILITY.
2. CONTRACTOR TO PROVIDE TEMPORARY, WATERTIGHT, CONTAINER FOR WASHOUT ON SITE. THE MAINTENANCE AND PROPER DISPOSAL OF THE CONTAINER AND ITS CONTENTS SHALL BE THE RESPONSIBILITY OF THE CONTRACTOR.
3. NO OTHER WASHOUT WILL BE ALLOWED.
4. NO CONCRETE WASHOUT SHALL OCCUR SEASIDE OF THE SEAWALL.

ALLOWABLE NON-STORMWATER DISCHARGES:

1. DISCHARGES FROM FIREFIGHTING ACTIVITIES
2. FIRE HYDRANT FLUSHINGS
3. WATERS USED TO WASH VEHICLES WHERE DETERGENTS ARE NOT USED
4. WATER USED TO CONTROL DUST
5. POTABLE WATER
6. PAVEMENT WASH WATERS - NO SPILLS OR DETERGENTS
7. LANDSCAPE IRRIGATION
8. UNCONTAMINATED AIR CONDITIONING/COMPRESSOR CONDENSATE
9. UNCONTAMINATED GROUND WATER OR SPRING WATER
10. FOUNDATION OR FOOTING DRAINS - NOT CONTAMINATED

WASTE DISPOSAL
(a.) WASTE MATERIALS
ALL WASTE MATERIALS WILL BE COLLECTED AND STORED IN SECURELY LIDDED RECEPTACLES. ALL TRASH AND CONSTRUCTION DEBRIS FROM THE SITE WILL BE DEPOSITED IN A DUMPSTER. NO CONSTRUCTION WASTE MATERIALS WILL BE BURIED ON SITE. ALL PERSONNEL WILL BE INSTRUCTED REGARDING THE CORRECT PROCEDURE FOR WASTE DISPOSAL BY THE SUPERINTENDENT.
(b.) HAZARDOUS WASTE
ALL HAZARDOUS WASTE MATERIALS WILL BE DISPOSED OF IN THE MANNER SPECIFIED BY LOCAL OR STATE REGULATION OR BY THE MANUFACTURER. SITE PERSONNEL WILL BE INSTRUCTED IN THESE PRACTICES BY THE SUPERINTENDENT.
(c.) SANITARY WASTE
ALL SANITARY WASTE WILL BE COLLECTED FROM THE PORTABLE UNITS A MINIMUM OF ONCE PER WEEK BY A LICENSED SANITARY WASTE MANAGEMENT CONTRACTOR.

TIMING OF CONTROLS/MEASURES
AS INDICATED IN THE SEQUENCE OF MAJOR ACTIVITIES, THE EROSION CONTROL DEVICES SHALL BE INSTALLED PRIOR TO COMMENCING ANY GRADING OF THE SITE AND MOVED OUT OF THE WAVE ENVIRONMENT DURING HIGH TIDES. STRUCTURAL CONTROLS SHALL BE INSTALLED CONCURRENTLY WITH THE APPLICABLE ACTIVITY. WHEN CONSTRUCTION ACTIVITY PERMANENTLY OR TEMPORARILY CEASES WITHIN 100 FEET OF ANY WETLAND OR STREAM, THE AREA SHALL BE STABILIZED WITHIN 7 DAYS OR PRIOR TO A RAIN EVENT. ONCE CONSTRUCTION ACTIVITY CEASES PERMANENTLY IN AN AREA, MEASURES WILL BE ESTABLISHED AND EROSION CONTROL DEVICES WILL BE REMOVED.

REBAR SPLICE LENGTH SCHEDULE NOTES:

1. IF CLEAR SPACING BETWEEN THE REBARS IS LESS THAN THREE BAR DIAMETERS, OR IF COVER IS LESS THAN TWO BAR DIAMETERS, INCREASE THE SPLICE LENGTH BY AN ADDITIONAL 50%.
2. IF EPOXY COATED REBAR IS USED, INCREASE THE SPLICE LENGTH BY AN ADDITIONAL 50%.
3. IF LIGHTWEIGHT CONCRETE IS USED, INCREASE THE SPLICE LENGTH BY AN ADDITIONAL 30%.
4. THE MINIMUM REBAR SPLICE LENGTH SCHEDULE IS BASED ON F'c= 4,000 PSI AND Fy= 60,000 PSI. ADJUST FOR OTHER STRENGTHS USING ACI-318.
5. FOR HORIZONTAL REINFORCEMENT SO PLACED THAT MORE THAN 12 INCHES OF FRESH CONCRETE IS CAST IN THE MEMBER BELOW, INCREASE THE DEVELOPMENT LENGTH BY AN ADDITIONAL 30%.
6. WHEN BARS OF DIFFERENT SIZE ARE LAP SPLICED, THE SPLICE LENGTH SHALL BE THE LARGER OF EITHER THE DEVELOPMENT LENGTH OF THE LARGER BAR OR THE SPLICE LENGTH OF THE SMALLER BAR.

BAR SIZE DESIGNATION		DEVELOPMENT LENGTH (IN.)	SPLICE LENGTH (IN.)	
ENGLISH	METRIC	Ld	CLASS B	CLASS B TOP BARS
#3	#10	15	19	25
#4	#13	19	25	33
#5	#16	24	31	40
#6	#19	29	37	48
#7	#22	42	54	70
#8	#25	48	62	81
#9	#29	54	70	91
#10	#32	61	79	103

REBAR SPLICE LENGTH SCHEDULE

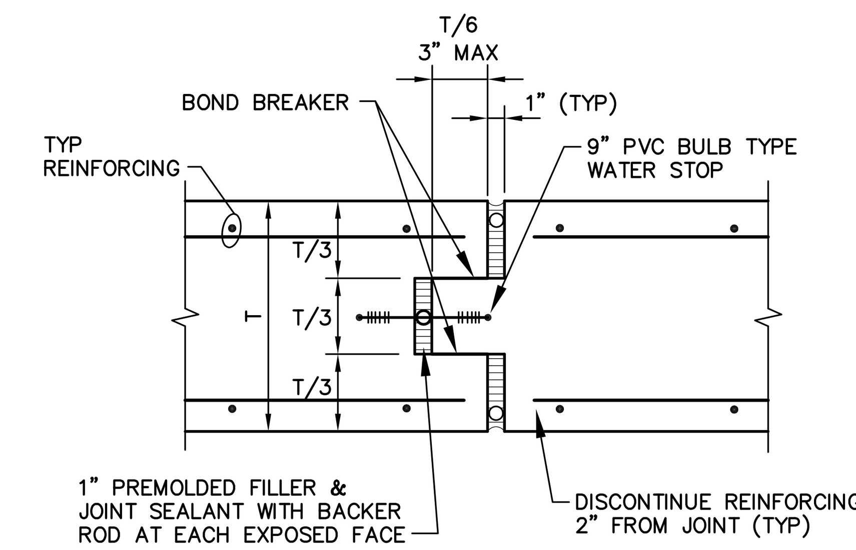

CONCRETE EXPANSION JOINT
NO SCALE

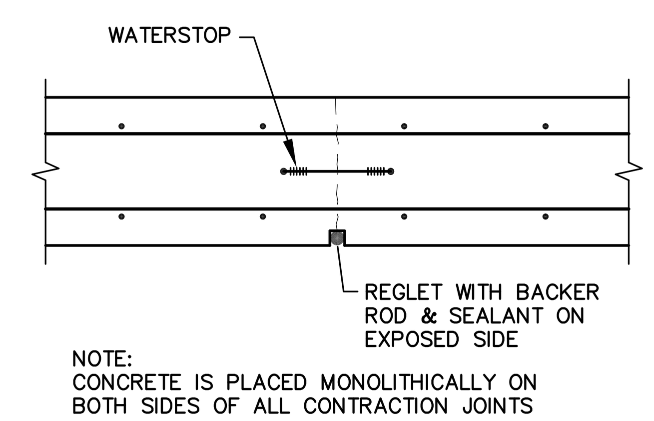

NOTE:
CONCRETE IS PLACED MONOLITHICALLY ON BOTH SIDES OF ALL CONTRACTION JOINTS

CONCRETE CONTRACTION JOINT
NO SCALE

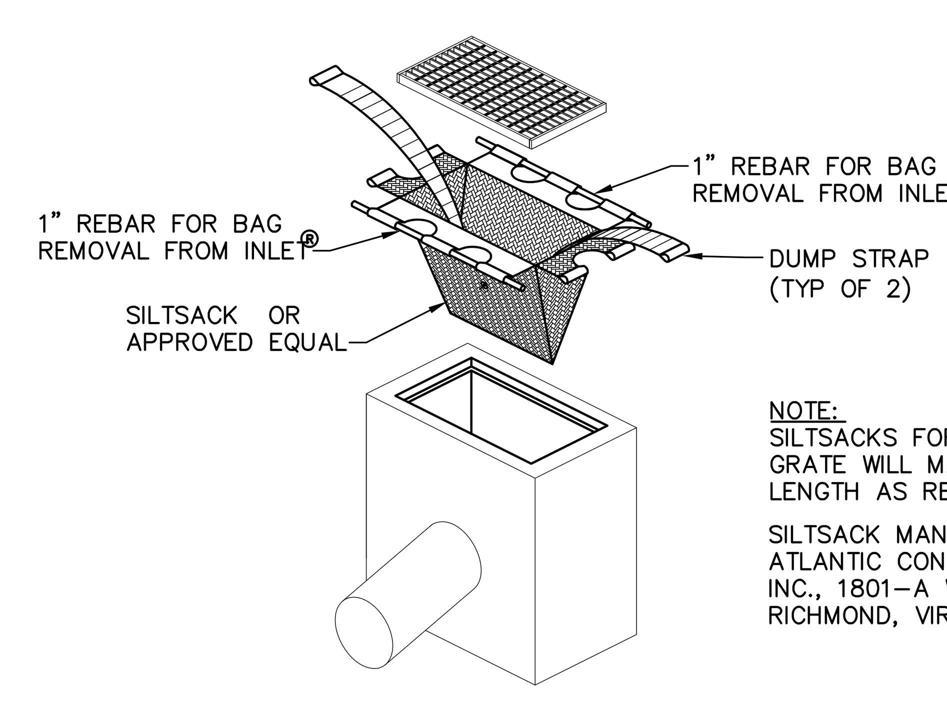

NOTE:
SILTSACKS FOR TRENCH GRATE WILL MATCH OPENING LENGTH AS REQUIRED.
SILTSACK MANUFACTURED BY: ATLANTIC CONSTRUCTION FABRICS, INC., 1801-A WILLIS ROAD, RICHMOND, VIRGINIA 23237

SILTSACK® EROSION CONTROL
NO SCALE

LEGEND
SEWER MANHOLE
HYDRANT
DRAIN MANHOLE
CATCH BASIN
SIGN
UTILITY POLE
GG GAS GATE
WG WATER GATE
EM ELECTRIC METER
X-0.7 SPOT ELEVATION
WHH WATER LINE
FP FLAG POLE
MLLW MEAN LOW LOW WATER
MLW MEAN LOW WATER
MHTL MEAN HIGH TIDE LINE
HTL HIGH TIDE LINE
CONC CONCRETE
SGE SLOPED GRANITE EDGING
EOP EDGE OF PAVEMENT
BCC BITUMINOUS CONCRETE CURB
VCC VERTICAL CONCRETE CURB
VGC VERTICAL GRANITE CURB
TW TOP OF WALL
B-4 SAMPLING LOCATION W/LABEL
D DRAIN LINE
S SEWER LINE
G GAS LINE
W WATER HANDHOLE
OHW OVERHEAD ELECTRIC LINE
2.0 1 FOOT CONTOUR LINE
5.0 5 FOOT CONTOUR LINE
VE ZONE
AO ZONE
-5.4 MLLW
-5.1 MLW
4.4 MHTL
7.6 HTL
TOP OF EXISTING OF SEAWALL
TEMPORARY CONSTRUCTION LAYDOWN/STAGING AREA
PROPOSED CONCRETE
LIMIT OF WORK
SHEETPILES

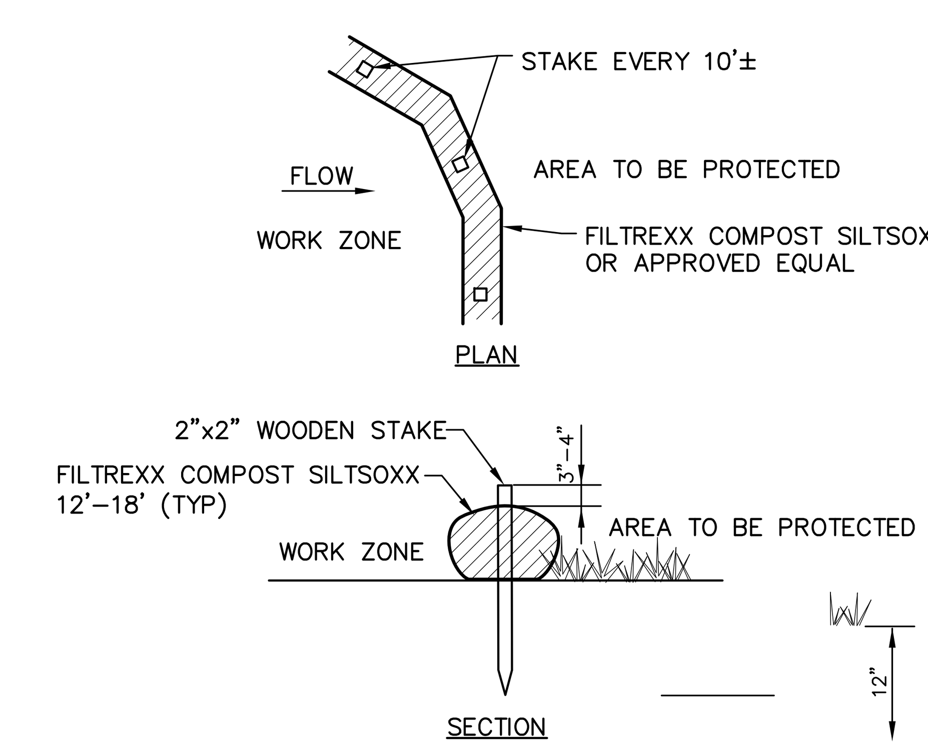

NOTES:

1. ALL MATERIAL IS TO MEET FILTREXX SPECIFICATIONS.
2. COMPOST, SOIL, ROCK AND SEED FILL TO MEET APPLICATIONS REQUIREMENTS.
3. SILTSOXX DEPICTED IS FOR MINIMUM SLOPES. GREATER SLOPES MAY REQUIRED LARGER SOCKS.
4. COMPOST MATERIAL TO BE DISPERSED ON SITE, AS DIRECTED.

EROSION CONTROL BARRIER
NO SCALE

Tighe&Bond
Consulting Engineers
www.tighebond.com

City of Quincy

Sachem Brook Outfall Repair Project

Quincy, Massachusetts

Mark	Date	Description
B	3/15	Issued for Bidding
A	12/14	Issued for Permit

PROJECT NO: Q0032
FILE: NOTES.dwg
DRAWN BY: CFY
CHECKED: AMR
APPROVED BY: DAM

NOTES, ABBREVIATIONS, AND LEGEND SHEET

SCALE: NO SCALE

SHEET 2

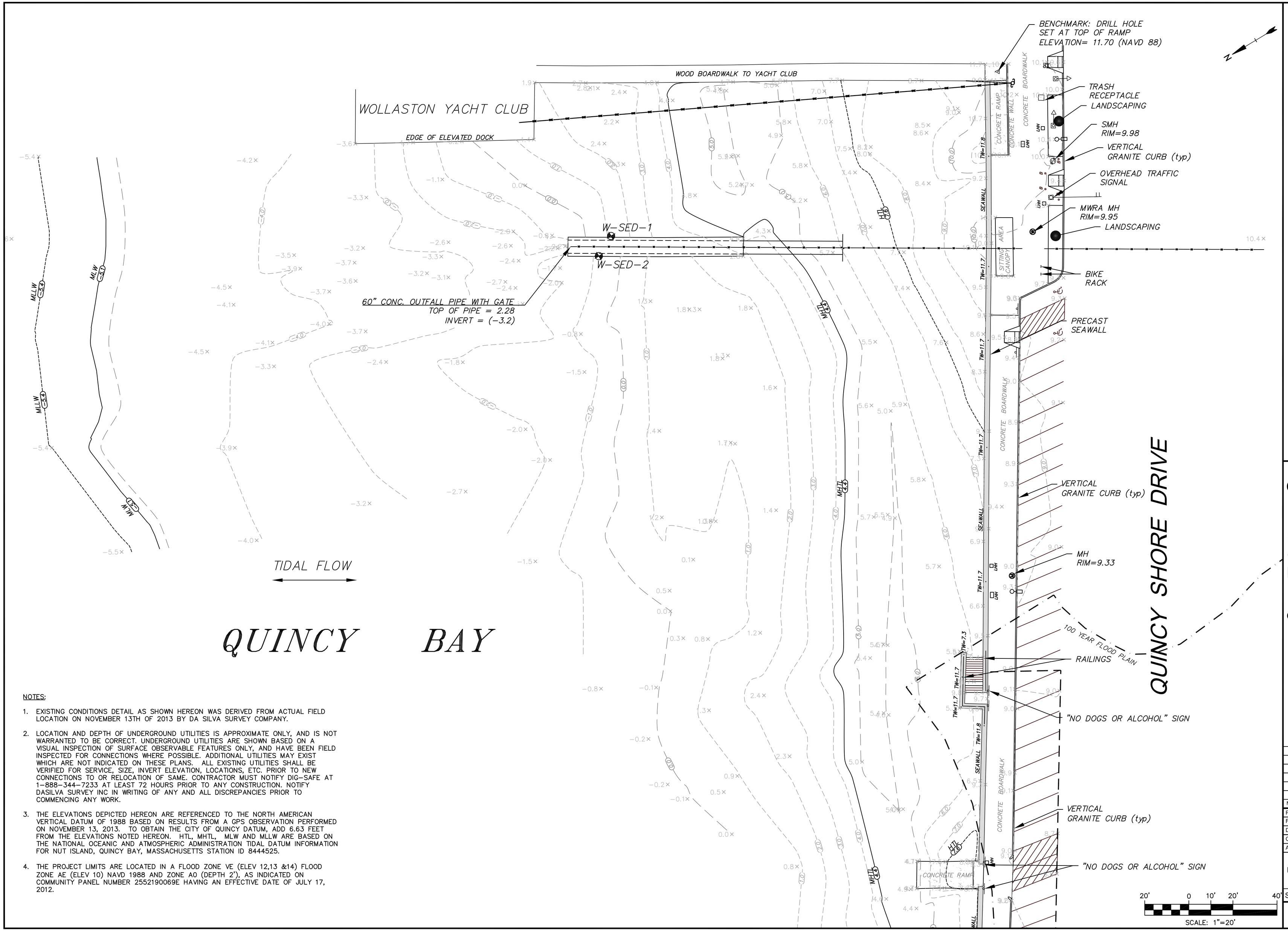

NOTES:

1. EXISTING CONDITIONS DETAIL AS SHOWN HEREON WAS DERIVED FROM ACTUAL FIELD LOCATION ON NOVEMBER 13TH OF 2013 BY DA SILVA SURVEY COMPANY.
2. LOCATION AND DEPTH OF UNDERGROUND UTILITIES IS APPROXIMATE ONLY, AND IS NOT WARRANTED TO BE CORRECT. UNDERGROUND UTILITIES ARE SHOWN BASED ON A VISUAL INSPECTION OF SURFACE OBSERVABLE FEATURES ONLY, AND HAVE BEEN FIELD INSPECTED FOR CONNECTIONS WHERE POSSIBLE. ADDITIONAL UTILITIES MAY EXIST WHICH ARE NOT INDICATED ON THESE PLANS. ALL EXISTING UTILITIES SHALL BE VERIFIED FOR SERVICE, SIZE, INVERT ELEVATION, LOCATIONS, ETC. PRIOR TO NEW CONNECTIONS TO OR RELOCATION OF SAME. CONTRACTOR MUST NOTIFY DIG-SAFE AT 1-888-344-7233 AT LEAST 72 HOURS PRIOR TO ANY CONSTRUCTION. NOTIFY DASILVA SURVEY INC IN WRITING OF ANY AND ALL DISCREPANCIES PRIOR TO COMMENCING ANY WORK.
3. THE ELEVATIONS DEPICTED HEREON ARE REFERENCED TO THE NORTH AMERICAN VERTICAL DATUM OF 1988 BASED ON RESULTS FROM A GPS OBSERVATION PERFORMED ON NOVEMBER 13, 2013. TO OBTAIN THE CITY OF QUINCY DATUM, ADD 6.63 FEET FROM THE ELEVATIONS NOTED HEREON. HTL, MHTL, MLW AND MLLW ARE BASED ON THE NATIONAL OCEANIC AND ATMOSPHERIC ADMINISTRATION TIDAL DATUM INFORMATION FOR NUT ISLAND, QUINCY BAY, MASSACHUSETTS STATION ID 8444525.
4. THE PROJECT LIMITS ARE LOCATED IN A FLOOD ZONE VE (ELEV 12,13 &14) FLOOD ZONE AE (ELEV 10) NAVD 1988 AND ZONE AO (DEPTH 2'), AS INDICATED ON COMMUNITY PANEL NUMBER 2552190069E HAVING AN EFFECTIVE DATE OF JULY 17, 2012.

Tighe&Bond
Consulting Engineers
www.tighebond.com

COMMONWEALTH OF MASSACHUSETTS
DAVID A. MURPHY
CIVIL
No. 35482
REGISTERED PROFESSIONAL ENGINEER
4-8-15

COMMONWEALTH OF MASSACHUSETTS
JEAN E. CHRISTY
CIVIL
No. 47080
REGISTERED PROFESSIONAL ENGINEER
4-8-15

City of Quincy

Sachem Brook Outfall Repair Project

Quincy, Massachusetts

Mark	Date	Description
B	3/15	Issued for Bidding
A	12/14	Issued for Permit

PROJECT NO:	Q0032
FILE:	Site.dwg
DRAWN BY:	DGM
CHECKED:	JEC
APPROVED BY:	DAM

EXISTING CONDITIONS PLAN

SCALE: 1"=20'

SHEET 3

Apr 07, 2015-8:26pm Plotted By: amr
Tighe & Bond, Inc. J:\Q\Q032 Wollaston Beach Outfall Repair\CAD\for construction\Site.dwg Layout: SHEET 3

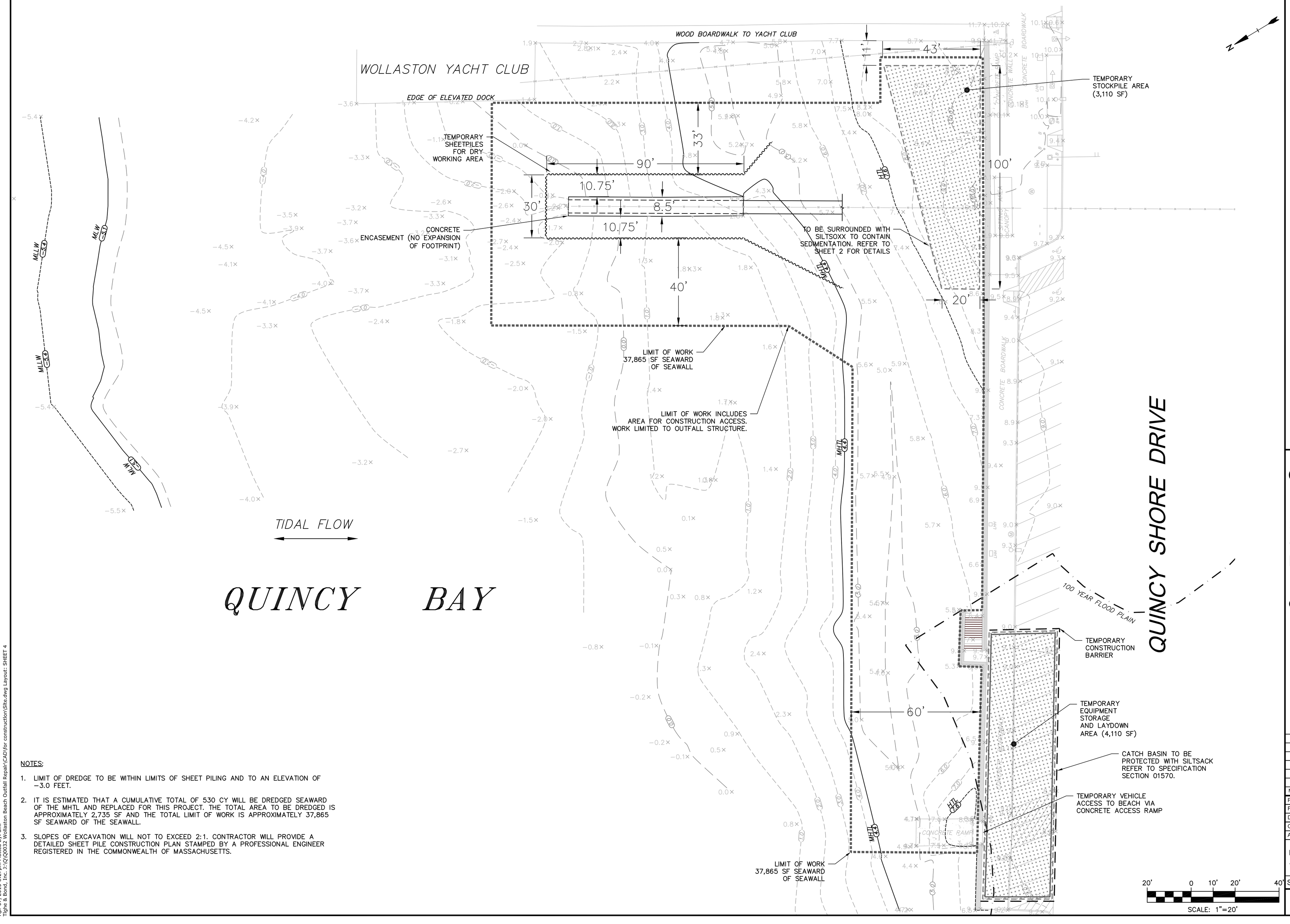

NOTES:

1. LIMIT OF DREDGE TO BE WITHIN LIMITS OF SHEET PILING AND TO AN ELEVATION OF −3.0 FEET.
2. IT IS ESTIMATED THAT A CUMULATIVE TOTAL OF 530 CY WILL BE DREDGED SEAWARD OF THE MHTL AND REPLACED FOR THIS PROJECT. THE TOTAL AREA TO BE DREDGED IS APPROXIMATELY 2,735 SF AND THE TOTAL LIMIT OF WORK IS APPROXIMATELY 37,865 SF SEAWARD OF THE SEAWALL.
3. SLOPES OF EXCAVATION WILL NOT TO EXCEED 2:1. CONTRACTOR WILL PROVIDE A DETAILED SHEET PILE CONSTRUCTION PLAN STAMPED BY A PROFESSIONAL ENGINEER REGISTERED IN THE COMMONWEALTH OF MASSACHUSETTS.

Apr 07, 2015-8:27pm Plotted By: amr
Tighe & Bond, Inc. J:\Q\Q0032 Wollaston Beach Outfall Repair\CAD\for construction\Site.dwg Layout: SHEET 4

Tighe&Bond
Consulting Engineers
www.tighebond.com

COMMONWEALTH OF MASSACHUSETTS
DAVID A. MURPHY
CIVIL
No. 35482
REGISTERED PROFESSIONAL ENGINEER
4-8-15

COMMONWEALTH OF MASSACHUSETTS
JEAN E. CHRISTY
CIVIL
No. 47080
REGISTERED PROFESSIONAL ENGINEER
4-8-15

City of Quincy

Sachem Brook Outfall Repair Project

Quincy, Massachusetts

Mark	Date	Description
B	3/15	Issued for Bidding
A	12/14	Issued for Permit

PROJECT NO:	Q0032
FILE:	Site.dwg
DRAWN BY:	DGM
CHECKED:	JEC
APPROVED BY:	DAM

LIMITS OF WORK AND IMPACT AREAS

SCALE: 1"=20'

SHEET 4

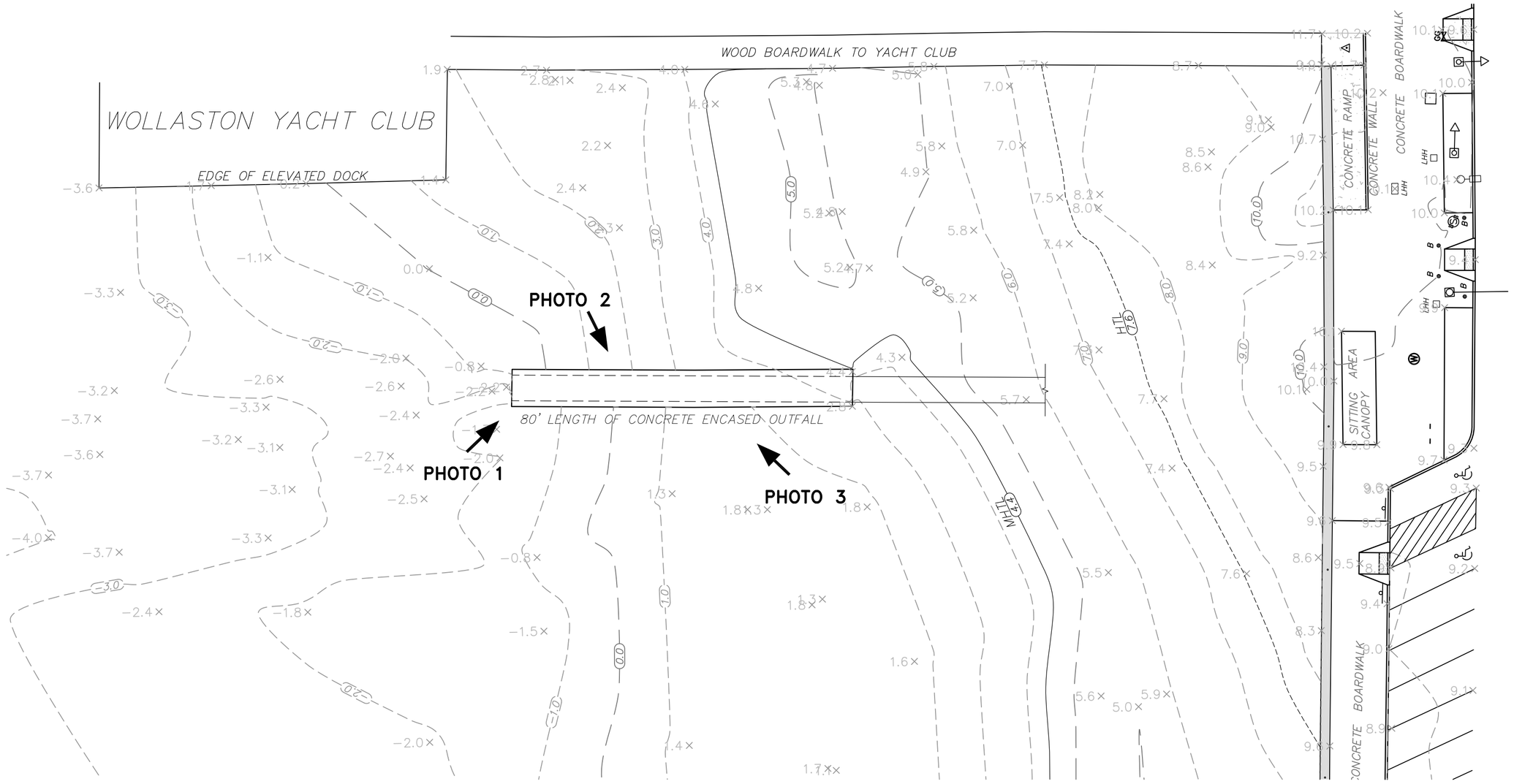

EXISTING SITE PLAN

1"=20'

20' 0 10' 20' 40'

SCALE: 1"=20'

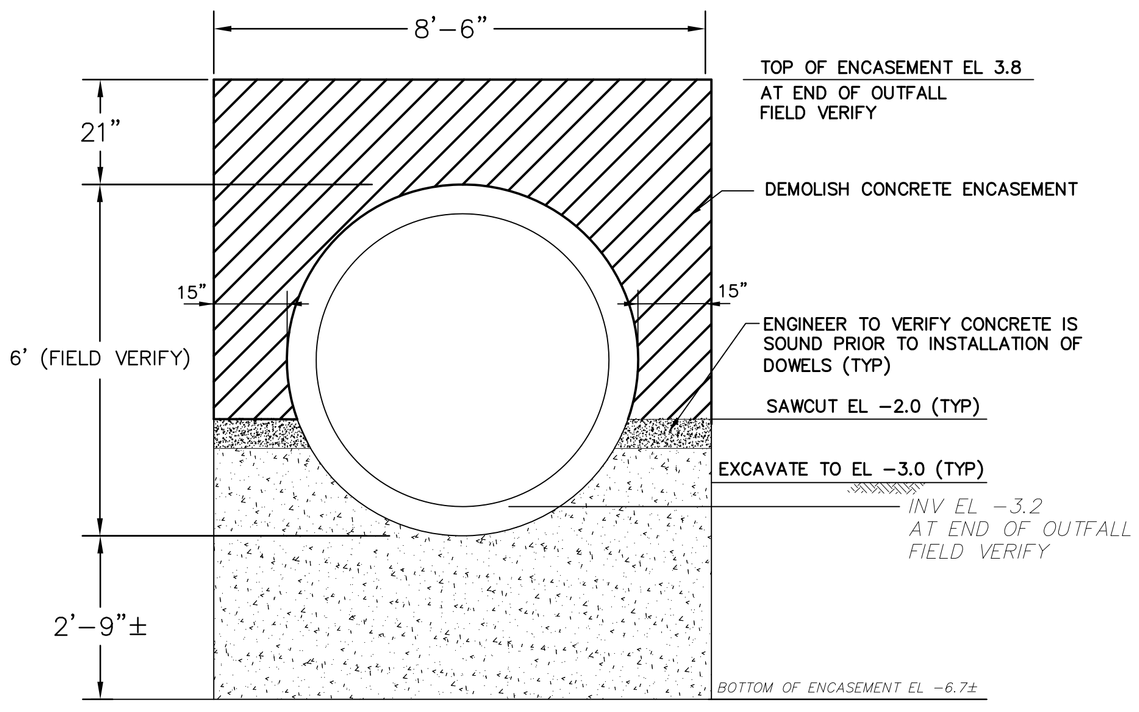

DEMOLITION OF CONCRETE ENCASEMENT OF RCP PIPE
CROSS-SECTION

1/2"=1'-0"

1' 0 1' 2' 2'

SCALE: 1/2"=1'

PHOTO 1

CONCRETE PIPE ENCASEMENT TO BE DEMOLISHED AND REPLACED IN KIND

PHOTO 2

PHOTO 3

Tighe&Bond
Consulting Engineers
www.tighebond.com

COMMONWEALTH OF MASSACHUSETTS
DAVID A. MURPHY
CIVIL
No. 35482
REGISTERED PROFESSIONAL ENGINEER
4-8-15

COMMONWEALTH OF MASSACHUSETTS
CRAIG S. FRENCH
STRUCTURAL
No. 45032
REGISTERED PROFESSIONAL ENGINEER
4.8.15

City of Quincy

Sachem Brook Outfall Repair Project

Quincy, Massachusetts

Mark	Date	Description
B	3/15	Issued for Bidding
A	12/14	Issued for Permit

PROJECT NO:	Q0032
FILE:	Site.dwg
DRAWN BY:	CFY
CHECKED:	AMR
APPROVED BY:	DAM

LIMITS OF DEMOLITION

SCALE: AS SHOWN

SHEET 5

Apr 07, 2015-8:29pm Plotted By: amr
Tighe & Bond, Inc. P:\Q\Q0032 Wollaston Beach Outfall Repair\CAD\for construction\Site.dwg Layout: SHEET 5

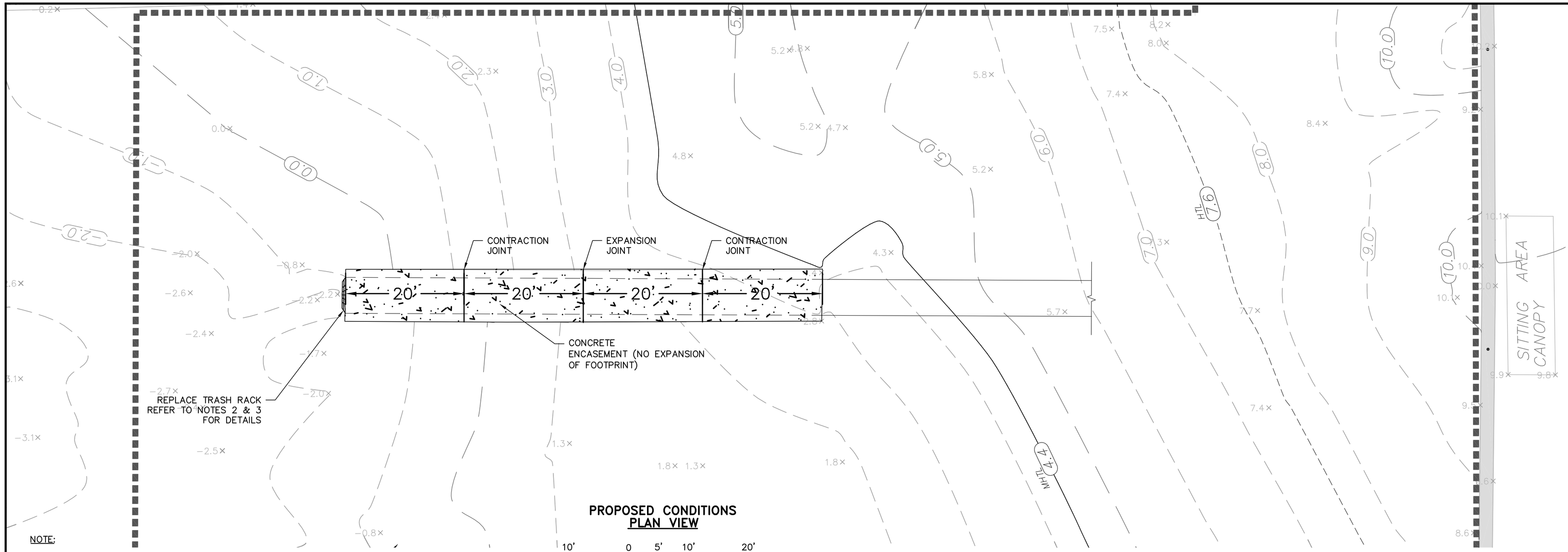

PROPOSED CONDITIONS
PLAN VIEW

10' 0 5' 10' 20'

SCALE: 1"=10'

NOTE:

1. FOR CONTRACTION AND EXPANSION JOINT DETAILS, REFER TO SHEET 2.
2. TRASH RACK REPLACEMENT TO BE A TOP–MOUNTED CONE GRATE TRASHRACK MANUFACTURED BY HAALA INDUSTRIES OR EQUAL.
3. ANCHOR PER MANUFACTURER'S RECOMMENDATIONS.
4. 84"ø TRASHRACK TO MOUNT TO NEW ENCASEMENT

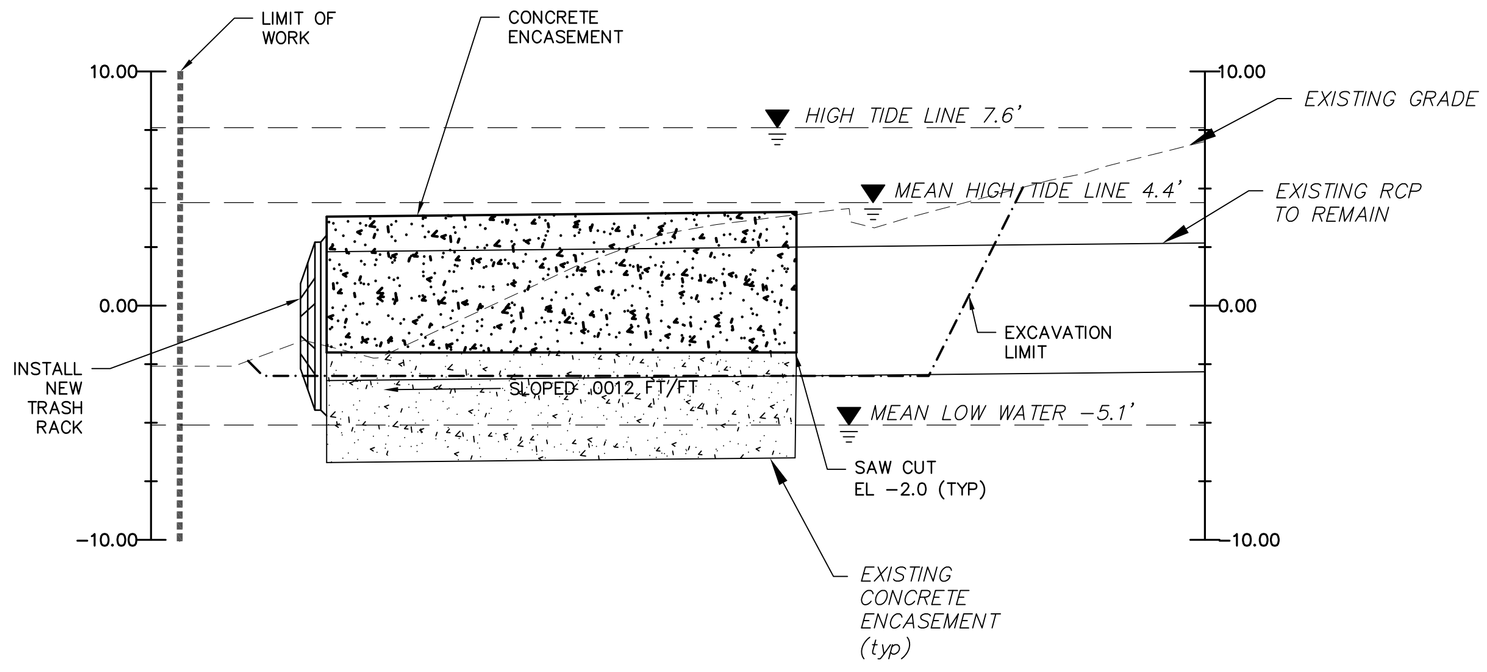

NOTES:

1. LIMIT OF DREDGE TO BE WITHIN LIMITS OF SHEET PILING AND TO AN ELEVATION OF −3.0 FEET.
2. IT IS ESTIMATED THAT A CUMULATIVE TOTAL OF 530 CY WILL BE DREDGED SEAWARD OF THE MHTL AND REPLACED FOR THIS PROJECT. THE TOTAL AREA TO BE DREDGED IS APPROXIMATELY 2,735 SF AND THE TOTAL LIMIT OF WORK IS APPROXIMATELY 37,865 SF SEAWARD OF THE SEAWALL.
3. CONCRETE ENCASEMENT WILL BE REPLACED IN–KIND AND WILL NOT EXPAND BEYOND EXISTING FOOTPRINT. TRASH RACK WILL BE REPLACED WILL SIMILAR UNIT TO BE APPROVED BY THE ENGINEER.
4. SLOPES OF THE EXCAVATION NOT TO EXCEED 2:1.

PROFILE CONDITIONS
CROSS–SECTION

20' 0 2.5' 20' 40'

SCALE: 1"=20'

HORIZONTAL SCALE

5' 0 2.5' 5' 10'

SCALE: 1"=5'

VERTICAL SCALE

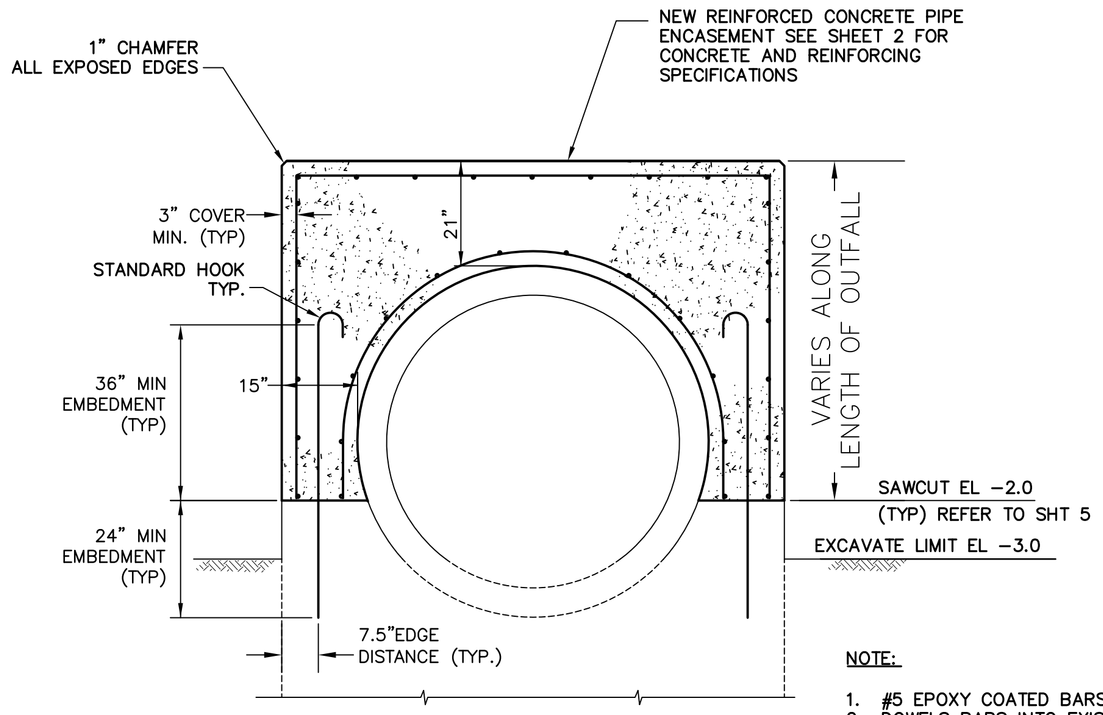

NOTE:

1. #5 EPOXY COATED BARS @ 12" OC (TYP.)
2. DOWELS BARS INTO EXISTING CONCRETE USING HILTI, HIT–RE 500SD OR EQUAL.

PROPOSED CONCRETE ENCASEMENT OF RCP PIPE
CROSS–SECTION

1' 0 1' 2' 2'

SCALE: 1/2"=1'

Tighe&Bond
Consulting Engineers
www.tighebond.com

COMMONWEALTH OF MASSACHUSETTS
DAVID A. MURPHY
CIVIL
No. 35482
REGISTERED PROFESSIONAL ENGINEER
4-8-15

COMMONWEALTH OF MASSACHUSETTS
CRAIG S. FRENCH
STRUCTURAL
No. 45032
REGISTERED PROFESSIONAL ENGINEER
4-8-15

City of Quincy

Sachem Brook Outfall Repair Project

Quincy, Massachusetts

Mark	Date	Description
B	3/15	Issued for Bidding
A	12/14	Issued for Permit

PROJECT NO: Q0032
FILE: Site.dwg
DRAWN BY: CFY
CHECKED: AMR
APPROVED BY: DAM

PROPOSED CONDITIONS PLAN - PROFILE AND TYPICAL CROSS SECTION

SCALE: AS SHOWN

SHEET 6

Apr 07, 2015-8:31pm Plotted By: amr
Tighe & Bond, Inc. J:\Q\Q0032 Wollaston Beach Outfall Repair\CAD\for construction\Site.dwg Layout: SHEET 6