CITY OF QUINCY, MASSACHUSETTS

ROSS GARAGE DEMOLITION AND TEMPORARY SURFACE PARKING RESTORATION PHASE 1

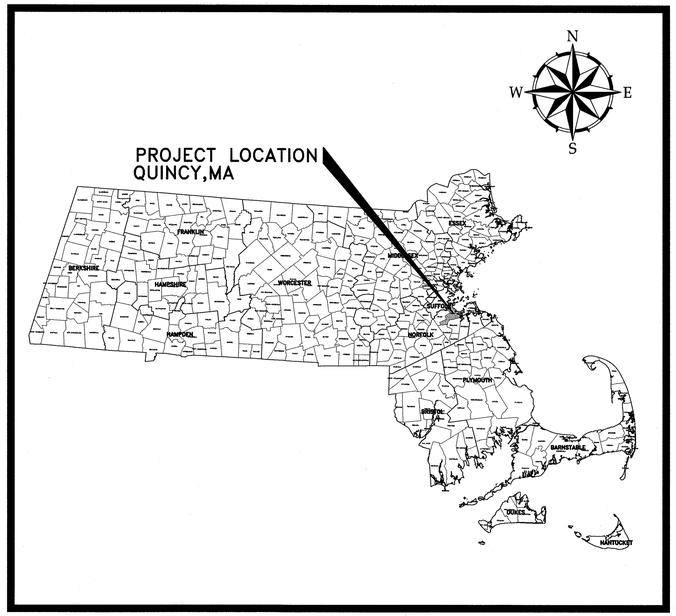

PROJECT LOCATION MAP

NOT TO SCALE

Mayor: Thomas P. Koch

Planning and Community Development Director: James J. Fatseas

Purchasing Agent: Kathryn R. Hobin

APRIL 2016

WOODARD & CURRAN

980 WASHINGTON STREET, SUITE 325
DEDHAM, MASSACHUSETTS 02026
800-446-5518 | www.woodardcurran.com
COMMITMENT & INTEGRITY DRIVE RESULTS

W&C PROJECT NO. 229256.0

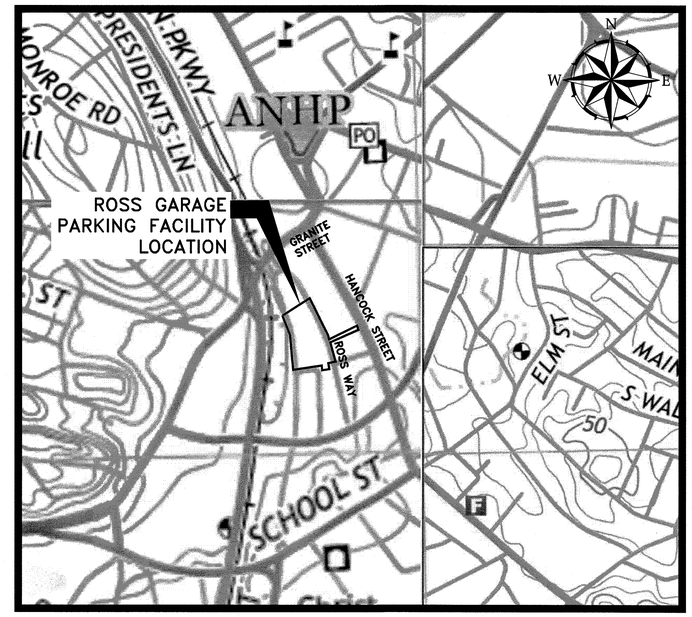

SOURCE: USGIS MAP

SITE LOCATION MAP

NOT TO SCALE

COMMONWEALTH OF MASSACHUSETTS
DAVID A. WHITE
CIVIL
No. 39880
REGISTERED PROFESSIONAL ENGINEER

ISSUED FOR BID

24x36 SHEET
1:1

GENERAL NOTES

GENERAL

1. COMPLY WITH CURRENT MASSACHUSETTS DEPARTMENT OF TRANSPORTATION HIGHWAY DIVISION CONSTRUCTION STANDARDS AND SPECIFICATIONS AS INDICATED IN THE GENERAL REQUIREMENTS.
2. IMPLEMENT EROSION AND WATER CONTROL MEASURES PER THE GENERAL REQUIREMENTS.
3. SUBMIT TRAFFIC CONTROL PLAN AND IMPLEMENT TRAFFIC CONTROL MEASURES PER GENERAL REQUIREMENTS.
4. IMPLEMENT DAILY MEASURES FOR SAFETY, SECURITY AND PROTECTION OF THE WORK AT THE END OF EACH DAY PER THE GENERAL REQUIREMENTS.
5. STORE MATERIALS WHICH COULD BE A POTENTIAL SOURCE OF STORM WATER POLLUTION SUCH AS GASOLINE, DIESEL FUEL, HYDRAULIC OIL, ETC., IN A STORAGE TRAILER OR COVERED LOCATION OR TAKE OFF-SITE AT THE END OF EACH DAY. LEGALLY DISPOSE OF IN A MANNER CONSISTENT WITH LAWS AND REGULATIONS.
6. REPAIR DAMAGE TO SURFACE FEATURES, SUBSURFACE FEATURES AND SUBSURFACE INFRASTRUCTURE AT NO ADDITIONAL COST TO OWNER. REPLACE PAVEMENT, WALKS, CURBS, ETC. THAT MUST BE CUT OR THAT ARE DAMAGED DURING CONSTRUCTION WITH MATCHING MATERIALS.
7. SET OR RESET ANY EXISTING PROPERTY LINE MONUMENTATON DISTURBED DURING CONSTRUCTION BY A PROFESSIONAL LICENSED SURVEYOR AT NO ADDITIONAL COST TO OWNER.
8. AREAS DISTURBED DURING CONSTRUCTION AND NOT RESTORED WITH IMPERVIOUS SURFACES (BUILDINGS, PAVEMENTS, WALKS, ETC.) SHALL RECEIVE 4 INCHES LOAM AND SEED.
9. THE LIMITS OF WORK DEPICTED ON THE DRAWINGS REPRESENT THE LIMITS OF SURFACE AND SUBSURFACE DISTURBANCE AND REPLACEMENT OF EXISTING SURFACE FEATURES (SUCH AS PAVEMENTS, SIDEWALKS, CURBING AND PAVEMENT MARKINGS). NO ADDITIONAL COMPENSATION SHALL BE PROVIDED FOR WORK PERFORMED BEYOND THESE LIMITS. HOWEVER, TEMPORARY USE OF THE PUBLIC RIGHT-OF-WAY OUTSIDE THE LIMIT OF WORK WILL BE ALLOWED FOR LIMITED SPECIFICALLY ALLOWED ACTIVITIES AND CONTRACTOR OPERATIONS.
10. ALL DRAINAGE INLETS WITHIN THE LIMIT OF WORK AND WITHIN 300 FEET DOWN GRADIENT SHALL RECEIVE SILT SACK INLET PROTECTION SEDIMENT CONTROL.

EXISTING CONDITIONS INFORMATION

1. EXISTING CONDITIONS BASE & PLANS OBTAINED FROM AN AUTOCAD FILE PROVIDED BY STEPHENSON DESIGN GROUP, LLC 111 TREMONT STREET, BRIGHTON, MASS 02135 TEL. 617.512.7095. THIS FILE WAS AMENDED BY WOODARD & CURRAN PERFORMING A BASIC LEVELING OPERATION ON 5/19/2011 AND SUPPLEMENTED BY CITY OF QUINCY GIS INFORMATION ALONG WITH DOWNTOWN REDEVELOPMENT ROSS GARAGE DRAWINGS PREPARED BY WOODARD AND CURRAN ON MAY 2011.
2. HORIZONTAL DATUM USED IS MASSACHUSETTS STATE PLANE COORDINATE SYSTEM (NAD 83).
3. PLANS ARE ON CITY OF QUINCY DATUM. TO CONVERT TO NAVD 88 FROM QUINCY DATUM SUBTRACT 6.6 FEET.

LAYOUT

1. SYMBOLS AND LEGENDS OF PROJECT FEATURES ARE GRAPHIC REPRESENTATIONS AND ARE NOT NECESSARILY SCALED TO ACTUAL DIMENSIONS OR LOCATIONS ON THE DRAWINGS. THE CONTRACTOR SHALL REFER TO THE DETAIL SHEET DIMENSIONS, MANUFACTURERS' LITERATURE, SHOP DRAWINGS AND FIELD MEASUREMENTS OF SUPPLIED PRODUCTS FOR LAYOUT OF THE PROJECT FEATURES.
2. DO NOT RELY SOLELY ON ELECTRONIC VERSIONS OF DRAWINGS, SPECIFICATIONS, AND DATA FILES OBTAINED FROM ENGINEER, FIELD VERIFY LOCATION OF PROJECT FEATURES.
3. VERIFY PROPOSED LAYOUT WITH ITS RELATIONSHIP TO THE EXISTING SITE SURVEY AND VERIFY ALL DIMENSIONS, SITE CONDITIONS, AND MATERIAL SPECIFICATIONS. NOTIFY THE OWNER AND ENGINEER OF ANY DISCREPANCIES BEFORE COMMENCING OR PROCEEDING WITH WORK.
4. COORDINATE WITH THE CITY OF QUINCY'S DPW TO CONDUCT TEST PITS TO VERIFY EXISTING CONDITIONS.

UTILITIES

1. LOCATIONS, SIZES, AND TYPES OF EXISTING UTILITIES SHOWN ARE AN APPROXIMATE REPRESENTATION ONLY. NEITHER THE OWNER NOR THE ENGINEER HAS INDEPENDENTLY VERIFIED THIS INFORMATION SHOWN ON THE DRAWINGS. UTILITY INFORMATION SHOWN DOES NOT GUARANTEE THE ACTUAL EXISTENCE, SERVICEABILITY, OR OTHER DATA CONCERNING THE UTILITIES, NOR DOES IT GUARANTEE THAT ADDITIONAL UTILITIES MAY BE PRESENT THAT ARE NOT SHOWN ON THE DRAWINGS.
2. NOTIFY "DIG-SAFE" (1-888-344-7233) AT LEAST 72 HOURS BEFORE EXCAVATING. NOTIFY OWNERS OF UNDERGROUND UTILITY LINES IN THE AREA OF PROPOSED EXCAVATION AT LEAST TWO WORKING DAYS, BUT NOT MORE THAN TEN WORKING DAYS, PRIOR TO COMMENCEMENT OF EXCAVATION OR DEMOLITION. MAINTAIN WATER, GAS, SEWER, ELECTRIC AND OTHER UTILITIES AT ALL TIMES DURING CONSTRUCTION.
3. VERIFY AND DETERMINE THE EXACT LOCATIONS, SIZES, AND ELEVATIONS OF THE POINTS OF CONNECTIONS TO EXISTING UTILITIES AND CONFIRM THERE ARE NO INTERFERENCES WITH EXISTING UTILITIES AND THE PROPOSED UTILITY ROUTES, INCLUDING ROUTES WITHIN THE PUBLIC RIGHTS OF WAY.
4. WHERE AN EXISTING UTILITY IS FOUND TO CONFLICT WITH THE PROPOSED WORK OR EXISTING CONDITIONS DIFFER FROM THOSE SHOWN SUCH THAT THE WORK CANNOT BE COMPLETED AS INTENDED, DETERMINE THE LOCATION, ELEVATION, AND SIZE OF THE UTILITY AND FURNISH TO THE ENGINEER FOR THE RESOLUTION OF THE CONFLICT PER THE GENERAL AND SUPPLEMENTARY CONDITIONS.

DEMOLITION

1. REMOVE AND DISPOSE OF EXISTING STRUCTURES & SITE FEATURES AND ALL DEBRIS AS SHOWN ON DRAWINGS UNLESS OTHERWISE INDICATED.
2. LEGALLY DISPOSE OF EXISTING DEBRIS PER LAWS AND REGULATIONS.
3. IF SUSPECTED CONTAMINATED SOIL, GROUNDWATER, AND OTHER MEDIA ARE ENCOUNTERED DURING EXCAVATION AND CONSTRUCTION BASED ON VISUAL, ODOR, OR OTHER EVIDENCE, STOP WORK IN THE VICINITY OF THE SUSPECT MATERIAL TO AVOID FURTHER SPREADING OF THE MATERIAL AND COMPLY WITH THE REQUIREMENTS SET FORTH IN THE GENERAL AND SUPPLEMENTARY CONDITIONS.

ABBREVIATIONS

ACI	AMERICAN CONCRETE INSTITUTE
ADJ.	ADJUST
ALUM.	ALUMINUM
APPROX.	APPROXIMATE
ASTM	AMERICAN SOCIETY OF TESTING MATERIALS
A-##	STORMWATER FEATURE FLAG
B	BOTTOM
B-#	BORING NUMBER
BB	BIT. BERM
BC	BOTTOM OF CURB
BCB	BIT/ CONC. BERM
BIT.	BITUMINOUS
BK	BACK
BLDG.	BUILDING
BOT	BOTTOM
BS	BOTTOM OF STEPS
BW	BOTTOM OF WALL
CALC	CALCULATES
CBLP	CONCRETE BOUND
CB	CATCH BASIN
CC	CONCRETE CURB
CDF	CONTROL DENSITY FILL
CIPP	CURED-IN-PLACE-PIPE LINING
CITS	CLEAN, INSPECT, TEST, & SEAL
℄	CENTER LINE
CLF	CHAINLINK FENCE
CMP	CORRUGATED METAL PIPE
CONC.	CONCRETE
CONT.	CONTINUOUS
CORR.	CORRUGATED
CU	COPPER
CW	CROSS WALK
D	DRAIN
D.I.	DUCTILE IRON
DIA.	DIAMETER
ø	DIAMETER
DH	DRILL HOLE
DIAG.	DIAGONALLY
DMH	DRAIN MANHOLE
EA.	EACH
ELECT.	ELECTRICAL
ELEV. / EL.	ELEVATION
EOP	EDGE OF PAVEMENT
EX.	EXISTING
FEMA	FEDERAL EMERGENCY MANAGEMENT AGENCY
FND	FOUND
FT.	FOOT
FTG.	FITTING
G	GAS
GALV.	GALVANIZED
H	HEIGHT
HDPE	HIGH DENSITY POLYETHYLENE
HOR.	HORIZONTAL
I.D.	INSIDE DIAMETER
I= /INV.	INVERT
INACC.	INACCESSIBLE
IP	IRON PIPE
IR	IRON PAD
L	LENGTH
LA	LANDSCAPE AREA
LB	POUND
LCC	LAND COURT CASE
LST	LANDSCAPE TIMBERS
LW / L.O.W.	LIMIT OF WORK
MAX.	MAXIMUM
MECH.	MECHANICAL
MFG.	MANUFACTURERS
MH	MANHOLE
MIN.	MINIMUM
MWRA	MASSACHUSETTS WATER RESOURCE AUTHORITY
NOM.	NOMINAL
N/A	NOT APPLICABLE
N/F	NOW OR FORMERLY
NTS	NOT TO SCALE
NVP	NO VISIBLE PIPES
OSHA	OCCUPATIONAL SAFETY AND HEALTH ADMINISTRATION
O.C.	ON CENTER
O.C.E.W.	ON CENTER EACH WAY
O.D.	OUTSIDE DIAMETER
ℙ	PROPERTY LINE
PSI	POUNDS PER SQUARE INCH
PVC	POLYVINYL CHLORIDE
R=	RIM= RIM ELEVATION OR RADIUS
R&D	REMOVE AND DISPOSE
RCP	REINFORCED CONCRETE PIPE
REC	RECORD
RET	RETAINING
S	SEWER
S.S.	STAINLESS STEEL
SB	STONE BOUND
SCH.	SCHEDULE
SECT.	SECTION
SF	SQUARE FEET
SGC	SLOPED GRANITE CURB
SHLDR.	SHOULDER
SHT.	SHEET
SQ.	SQUARE
SQ. FT.	SQUARE FEET
STF	STOCKADE FENCE
TBM	TEMPORARY BENCH MARK
TC	TOP OF CURB
THK.	THICK
TOW	TOP OF WATER
TS	TOP OF STEPS
TT=	TOP OF TRAP
TW	TOP OF WALL
TYP.	TYPICAL
UGE	UNDERGROUND ELECTRIC
UGT	UNDERGROUND TELEPHONE
VERT.	VERTICAL
VGC	VERTICAL GRANITE CURB
W	WATER
W/	WITH
WF	WOOD FRAME
WF-##	WETLAND FLAG NUMBER
WT	WATER TIGHT

LEGEND

EXISTING		PROPOSED
122	CONTOUR (1' OR 2' INTERVAL)	122
120	CONTOUR (INDEX)	120
W	WATER MAIN	
SD	STORM DRAIN PIPE	
T	TELEPHONE	
G	GAS LINE	
S	SANITARY SEWER	
OHW	OVERHEAD WIRES	
X	CHAIN LINK FENCE	
	GUARDRAIL	
C	CABLE TELEVISION	
E	ELECTRIC	
	WOOD FENCE	
	PROPERTY LINE	
	RETAINING WALL	
	CURB	
	EDGE OF PAVEMENT	
	EDGE OF GRAVEL	
	COMPOST FILTER TUBE	
	LIMIT OF WORK	LW
	REMOVE AND DISPOSE CEMENT AND BIT. CONCRETE	
	SAWCUT LINE AND LIMIT OF NEW PAVEMENT	
XXX.XX	BOUND FOUND	XXX.XX
	SPOT ELEVATION	
	HANDICAP RAMP	
GP	GATE POST	
	INDICATES COMMON OWNERSHIP	
W	WATER METER BOX	
B-XX	BORING HOLE LOCATION	
TP-XX	TEST PIT	
	UTILITY POLE W/ LIGHT	
	UTILITY POLE	
	HYDRANT	
	CATCH BASIN	
	ROUND CATCH BASIN	
D	DRAIN MANHOLE	
S	SEWER MANHOLE	
T	TELEPHONE MANHOLE	
C	COMMUNICATION MANHOLE	
E	ELECTRIC MANHOLE	
W	WATER MANHOLE	
MH	UNKNOWN MANHOLE	
	DECIDUOUS TREE	
	REMOVE AND DISPOSE TREE	
	REMOVE AND DISPOSE STUMP	
	TREE PROTECTION	
	SILT SACK	
	HAYBALE	
	BOLLARD	
MAIL	MAILBOX	
	TRANSFORMER	
	LIGHT POLE	
ECB	EMERGENCY CALL BOX	
FA	FIRE ALARM	
	DRILL HOLE	
	WATER SHUT OFF/WATER GATE	
	GAS SHUT OFF/GAS GATE	
	GUY WIRE	
	TRAFFIC CONTROL BOX	
	TRAFFIC SIGNAL	
	GUY POLE	
EH	ELECTRIC HANDHOLE	
	SIGN	
	HANDICAP RAMP	
	ACCESSIBLE PARKING	

SHEET INDEX

CIVIL	
C-00	COVER
C-01	GENERAL NOTES, ABBREVIATIONS, LEGEND & SHEET INDEX
C-02	EXISTING CONDITIONS
C-03	SITE PREPARATION PLAN
C-04	SITE RESTORATION PLAN
C-05	CIVIL DETAILS 1
C-06	CIVIL DETAILS 2
STRUCTURAL	
S-01	ROOF LEVEL GARAGE PLAN & NOTES
S-02	SECOND LEVEL GARAGE PLAN, NOTES, & DETAILS
S-03	FIRST LEVEL GARAGE PLAN
S-04	GROUND LEVEL GARAGE PLAN, SCHEDULE, & NOTES
ELECTRICAL	
E-01	ELECTRICAL LEGEND
E-02	ROSS GARAGE ELECTRICAL SITE DEMOLITION PLAN
E-03	ROSS GARAGE ELECTRICAL SITE PLAN
E-04	ELECTRICAL DETAILS

ISSUED FOR BID

980 Washington Street, Suite 325
Dedham, Massachusetts 02026
800.446.5518 | www.woodardcurran.com

COMMITMENT & INTEGRITY DRIVE RESULTS

THIS DOCUMENT IS THE PROPERTY OF WOODARD & CURRAN INC., AND ITS CLIENT. REPRODUCTION OR MODIFICATION WITHOUT WRITTEN PERMISSION IS PROHIBITED.

COMMONWEALTH OF MASSACHUSETTS
DAVID A. WHITE
CIVIL
No. 39880
REGISTERED PROFESSIONAL ENGINEER

REV.	DESCRIPTION	DATE

DESIGNED BY: PM | CHECKED BY: RJD
DRAWN BY: PW/KCC | 229256-C-00-01.dwg

GENERAL NOTES, ABBREVIATIONS, LEGEND & SHEET INDEX

CITY OF QUINCY, MASSACHUSETTS
DEPARTMENT OF PLANNING AND COMMUNITY DEVELOPMENT
34 CODDINGTON STREET

ROSS GARAGE DEMOLITION AND TEMPORARY SURFACE RESTORATION PHASE 1

JOB NO.:229256.00
DATE: APRIL 2016
SCALE: NOT TO SCALE
SHEET: 2 OF 15

C-01

\\wc\shared\Projects\229256 quincy ma - ross garage demolition\Drawings\Current\Civil\229256-C-00-01.dwg Apr 04, 2016 - 2:06pm

24x36 SHEET
1:1

980 Washington Street, Suite 325
Dedham, Massachusetts 02026
800.446.3518 | www.woodardcurran.com

WOODARD & CURRAN

COMMITMENT & INTEGRITY DRIVE RESULTS

THIS DOCUMENT IS THE PROPERTY OF WOODARD & CURRAN INC. AND ITS CLIENT. REPRODUCTION OR MODIFICATION WITHOUT WRITTEN PERMISSION IS PROHIBITED.

COMMONWEALTH OF MASSACHUSETTS
DAVID A. WHITE
CIVIL
No. 38860
REGISTERED PROFESSIONAL ENGINEER

REV.	DESCRIPTION	DATE

DESIGNED BY: PM
DRAWN BY: PM/KCC
CHECKED BY: RJD
229256-C-02.dwg

EXISTING CONDITIONS

CITY OF QUINCY, MASSACHUSETTS
DEPARTMENT OF PLANNING AND COMMUNITY DEVELOPMENT
34 CODDINGTON STREET

ROSS GARAGE DEMOLITION AND TEMPORARY SURFACE RESTORATION PHASE 1

JOB NO.:229256.00
DATE: APRIL 2016
SCALE: 1" = 40'
SHEET: 3 OF 15

C-02

24x36 SHEET
1:1

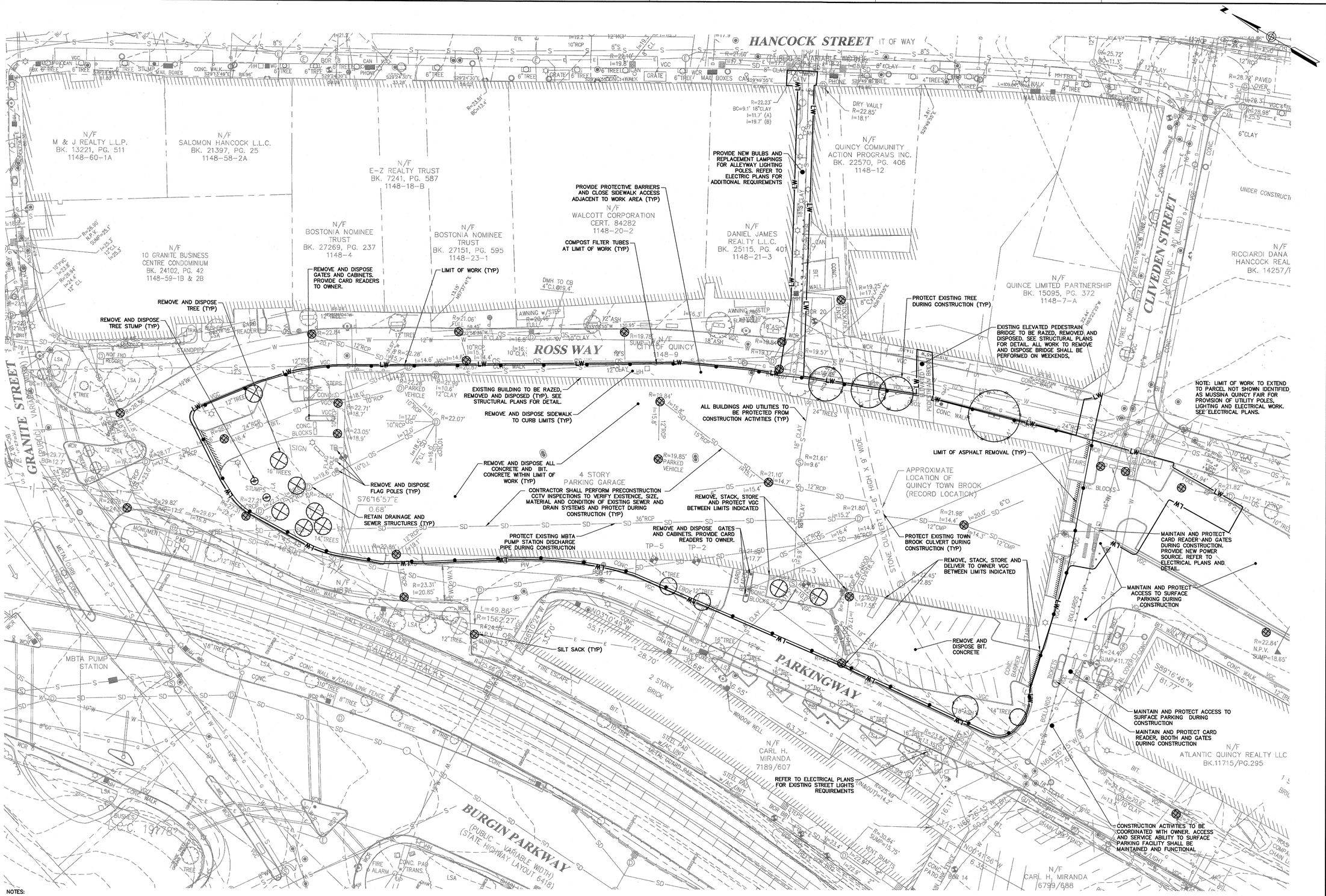

NOTES:

1. PROVIDE CONSTRUCTION ENTRANCES AS POINTS OF ACCESS AND EGRESS AS WORK PROGRESSES.
2. ALL PAVEMENT TO REMAIN OUTSIDE LIMITS OF WORK SHALL BE SAWCUT AT LIMITS OF WORK.
3. TEMPORARY CONSTRUCTION FENCE TO REMAIN IN PLACE FOLLOWING CONSTRUCTION ACTIVITIES UP TO A MINIMUM OF THREE MONTHS AS COORDINATED WITH OWNER.
4. REMOVE, STACK AND DELIVER WHEEL STOPS. THE AMOUNT AND LOCATION TO BE DETERMINED BY OWNER.
5. PROTECT ALL UTILITIES TO REMAIN IN SERVICE. PROVIDE UTILITY PROTECTION PLAN OF EXISTING UTILITIES INCLUDING SPECIFIC MEASURES FOR MBTA PUMP STATION DISCHARGE DRAIN LINE AND FOR TOWN BROOK CULVERT. PROVIDE EMERGENCY RESPONSE PLAN RELATING TO UTILITY PROTECTION PLAN.
6. CUT AND CAP GARAGE UTILITY SERVICES AT LIMITS OF WORK. COORDINATE LOCATIONS WITH SERVICE PROVIDERS.

ISSUED FOR BID

980 Washington Street, Suite 325
Dedham, Massachusetts 02026
800.445.5516 | www.woodardcurran.com
WOODARD & CURRAN
COMMITMENT & INTEGRITY DRIVE RESULTS

THIS DOCUMENT IS THE PROPERTY OF WOODARD & CURRAN INC., AND ITS CLIENT. REPRODUCTION OR MODIFICATION WITHOUT WRITTEN PERMISSION IS PROHIBITED.

COMMONWEALTH OF MASSACHUSETTS
DAVID A. WHITE
CIVIL
No. 38060
REGISTERED PROFESSIONAL ENGINEER

REV	DESCRIPTION	DATE

DESIGNED BY: PM | CHECKED BY: R.D
DRAWN BY: PM/ACC | 229256-C-03.dwg

SITE PREPARATION PLAN

CITY OF QUINCY, MASSACHUSETTS
DEPARTMENT OF PLANNING AND COMMUNITY DEVELOPMENT
34 CODDINGTON STREET

ROSS GARAGE DEMOLITION AND TEMPORARY SURFACE RESTORATION PHASE 1

JOB NO.:229256.00
DATE: APRIL 2016
SCALE: 1" = 30'
SHEET: 4 OF 15

C-03

\\wc\shared\Projects\229256 quincy mg - ross garage demolition\wip\ross garage demolition\Drawings\Current\Civil\229256-C-03.dwg, Apr 04, 2016 - 3:25pm

24x36 SHEET
1:1

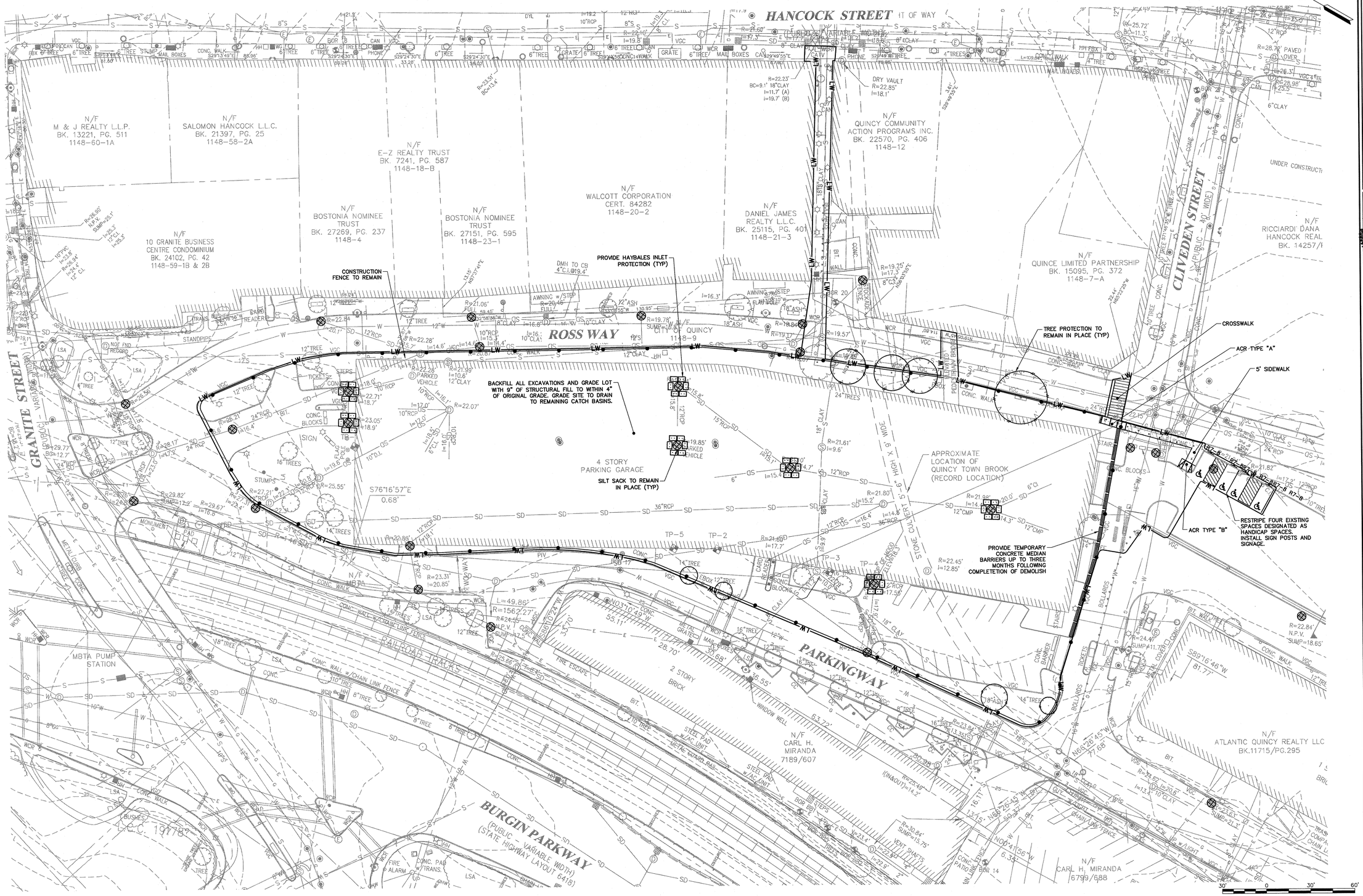

NOTE:

1. ALL PAVEMENT RESTORATION AREAS SHALL MEET EXISTING PAVEMENT SECTIONS, HAVE CLEAN LINEAR LIMITS AND HAVE SMOOTH TRANSITIONS TO MEET ADJACENT SURFACE

ISSUED FOR BID

WOODARD & CURRAN
980 Washington Street, Suite 325
Dedham, Massachusetts 02026
800.446.5518 | www.woodardcurran.com
COMMITMENT & INTEGRITY DRIVE RESULTS

THIS DOCUMENT IS THE PROPERTY OF WOODARD & CURRAN INC. AND ITS CLIENT. REPRODUCTION OR MODIFICATION WITHOUT WRITTEN PERMISSION IS PROHIBITED.

COMMONWEALTH OF MASSACHUSETTS
DAVID A. WHITE
CIVIL
No. 39880
REGISTERED PROFESSIONAL ENGINEER
Dave A. White
4/4/16

REV	DESCRIPTION	DATE

DESIGNED BY: PM
DRAWN BY: PM/KCC
CHECKED BY: RJD
229256-C-04.dwg

SITE RESTORATION PLAN

CITY OF QUINCY, MASSACHUSETTS
DEPARTMENT OF PLANNING AND COMMUNITY DEVELOPMENT
34 CODDINGTON STREET

ROSS GARAGE DEMOLITION AND TEMPORARY SURFACE RESTORATION PHASE 1

JOB NO.: 229256.00
DATE: APRIL 2016
SCALE: 1" = 30'
SHEET: 5 OF 15

C-04

\\wc\shared\Projects\229256 quincy ma - ross garage demolition\wip\ross garage demolition\Drawings\Current\Civil\229256-C-04.dwg, Apr 04, 2016 - 3:31pm

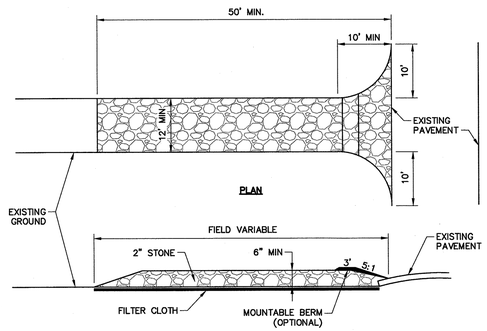

CONSTRUCTION SPECIFICATIONS:

1. USE 2" DIAMETER STONE OR RECLAIMED/RECYCLED CONCRETE EQUIVALENT.
1. RECOMMENDED LENGTH GREATER THAN 50 FEET WHERE PRACTICAL.
2. THICKNESS NOT LESS THAN 6 INCHES.
3. 10 FOOT MINIMUM WIDTH, BUT NOT LESS THAN FULL WIDTH AT POINTS WHERE INGRESS AND EGRESS OCCUR.
4. FILTER CLOTH SHALL BE PLACED OVER THE ENTIRE AREA PRIOR TO PLACING OF STONE.

CONSTRUCTION SPECIFICATIONS:

6. ALL SURFACE WATER FLOWING OR DIVERTED TOWARD CONSTRUCTION ENTRANCES SHALL BE PIPED ACROSS THE ENTRANCE. IF PIPING IS IMPRACTICAL, A MOUNTABLE BERM WILL BE PERMITTED.
7. ENTRANCE SHALL BE MAINTAINED IN A CONDITION THAT WILL PREVENT TRACKING OR FLOWING OF SEDIMENT ONTO PUBLIC RIGHTS-OF-WAY. THIS MAY REQUIRE PERIODIC TOP DRESSING WITH ADDITIONAL STONE AS CONDITIONS DEMAND, AND REPAIR AND/OR CLEANOUT OF ANY MEASURES USED TO TRAP SEDIMENT. ALL SEDIMENT SPILLED, DROPPED, WASHED, OR TRACKED ONTO PUBLIC RIGHTS-OF-WAY MUST BE REMOVED IMMEDIATELY.
8. PERIODIC INSPECTION AND NEEDED MAINTENANCE SHALL BE PROVIDED BY THE CONTRACTOR.
9. REMOVE STABILIZED CONSTRUCTION ENTRANCE PRIOR TO PLACEMENT OF BITUMINOUS CONCRETE PAVEMENT.

STABILIZED CONSTRUCTION ENTRANCE

NOT TO SCALE

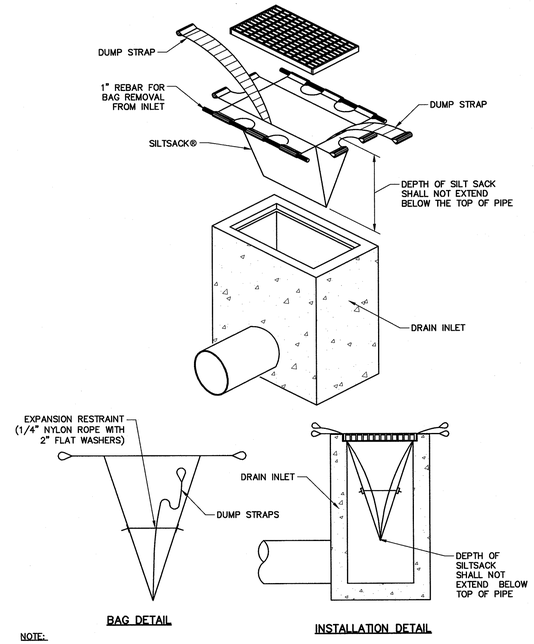

NOTE:

1. HIGH-FLOW SILTSACK AS MANUFACTURED BY ACF ENVIRONMENTAL OR APPROVED EQUAL (FOR AREAS OF MODERATE TO HEAVY PRECIPITATION AND RUN-OFF)

SILT SACK

NOT TO SCALE

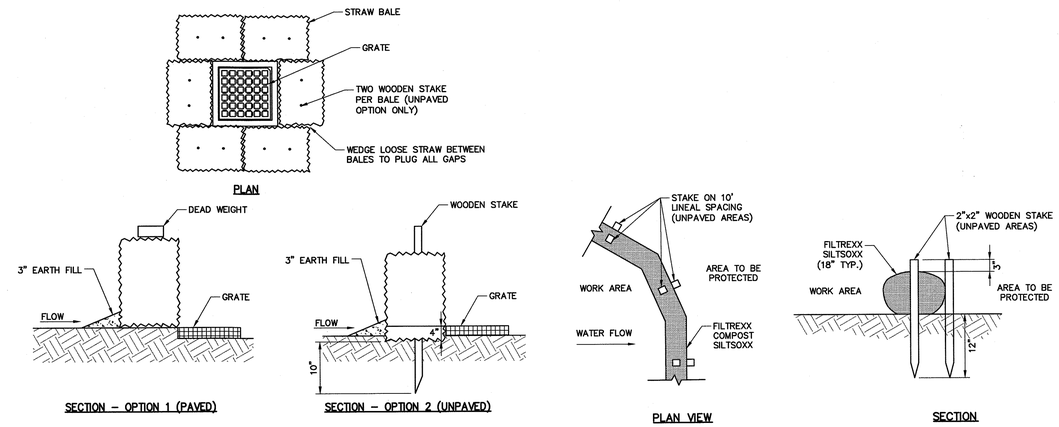

HAYBALE EROSION CONTROL AT DRAIN INLETS

NOT TO SCALE

COMPOST FILTER TUBE

NOT TO SCALE

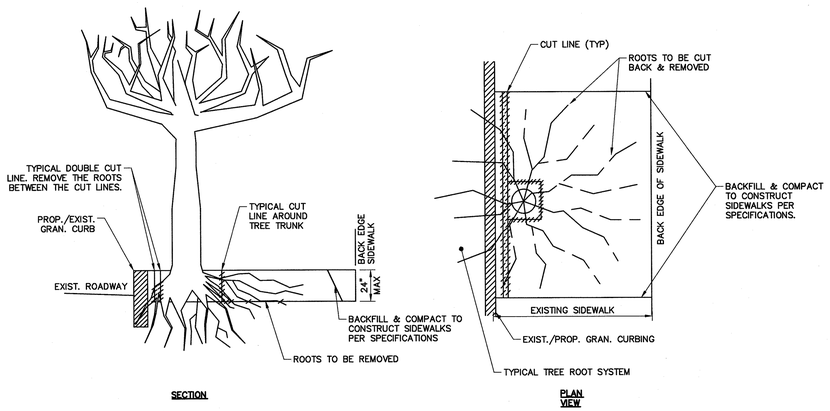

NOTES:

1. LOCATE THE CUT LINES AS CLOSE TO THE CURB LINE AS POSSIBLE.
2. UNLESS DIRECTED BY THE ENGINEER, ALL EXCAVATION RELATED TO THE ROOT SYSTEM AND STUMP REMOVAL SHALL NOT BE OUTSIDE THE SIDEWALK LIMITS.
3. ALL ROOTS WITHIN 24 INCH DEPTH AND THE SIDEWALK LIMITS SHALL BE REMOVED.

TREE ROOT REMOVAL

NOT TO SCALE
SOURCE: CITY OF QUINCY

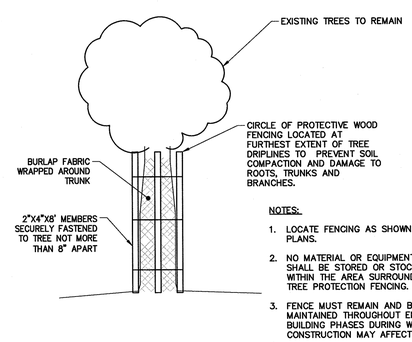

NOTES:

1. LOCATE FENCING AS SHOWN ON PLANS.
2. NO MATERIAL OR EQUIPMENT SHALL BE STORED OR STOCKPILED WITHIN THE AREA SURROUNDED BY TREE PROTECTION FENCING.
3. FENCE MUST REMAIN AND BE MAINTAINED THROUGHOUT ENTIRE BUILDING PHASES DURING WHICH CONSTRUCTION MAY AFFECT TREES.

TREE PROTECTION

NOT TO SCALE

ISSUED FOR BID

980 Washington Street, Suite 325
Dedham, Massachusetts 02026
800.446.5516 | www.woodardcurran.com
WOODARD & CURRAN
COMMITMENT & INTEGRITY DRIVE RESULTS

THE DOCUMENT IS THE PROPERTY OF WOODARD & CURRAN INC. AND ITS CLIENT. REPRODUCTION OR MODIFICATION WITHOUT WRITTEN PERMISSION IS PROHIBITED.

COMMONWEALTH OF MASSACHUSETTS
DAVID A. WHITE
CIVIL
No. 39860
REGISTERED PROFESSIONAL ENGINEER
4/14/16

REV	DESCRIPTION	DATE

DESIGNED BY: PMM
DRAWN BY: KCC
CHECKED BY: RJD
229256-C-05-06.dwg

CIVIL DETAILS 1

CITY OF QUINCY, MASSACHUSETTS
DEPARTMENT OF PLANNING AND COMMUNITY DEVELOPMENT
34 CODDINGTON STREET

ROSS GARAGE DEMOLITION AND TEMPORARY SURFACE RESTORATION PHASE 1

JOB NO.:229256.00
DATE: APRIL 2016
SCALE: AS SHOWN
SHEET: 6 OF 15

C-05

24x36 SHEET
1:1

\\wc\shared\Projects\229256 quincy ma - ross garage demolition\wp\ross garage demolition\Drawings\Current\Civil\229256-C-05-06.dwg, Apr 04, 2016 - 2:07pm

24x36 SHEET
1:1

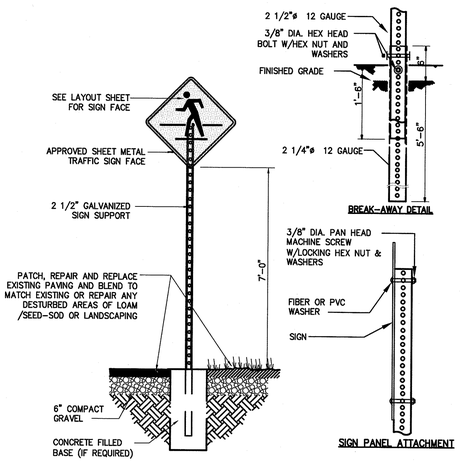

TRAFFIC SIGN POST
NOT TO SCALE

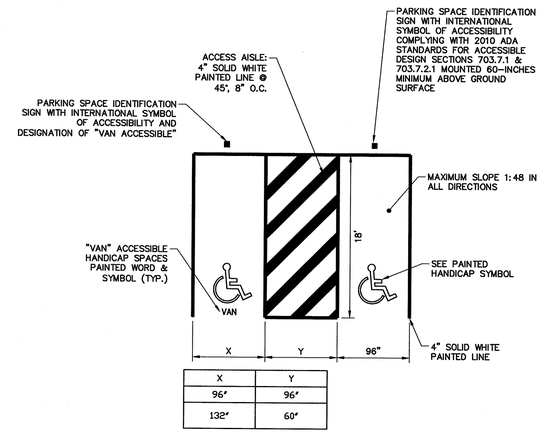

X	Y
96'	96'
132'	60'

HANDICAP PARKING STALL LAYOUT
NOT TO SCALE

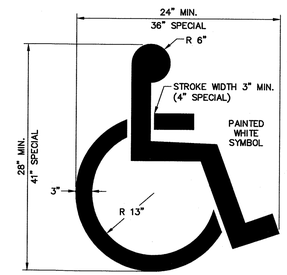

PAINTED HANDICAP SYMBOL
NOT TO SCALE

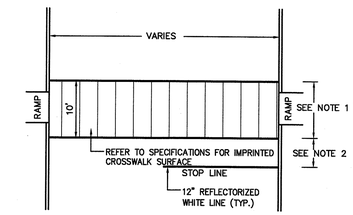

NOTE:
1. CROSSWALK SHALL BE 10' WIDE UNLESS NOTED OTHERWISE ON THE PLANS.
2. DISTANCE FROM STOP LINE SHALL BE 4' UNLESS OTHERWISE INDICATED PLANS.
3. CROSSWALK & STOPLINE PAVEMENT MARKINGS FOR USE AS TEMPORARY PAVEMENT MARKING (NON- REFLECTORIZED PAINT).
4. PERMANENT USE (THERMOPLASTIC) SHALL BE USED AS SPECIFIED UNDER MASS DOT STANDARD SPECIFICATIONS.

CROSSWALK AND STOP LINE PAVEMENT MARKING
NOT TO SCALE

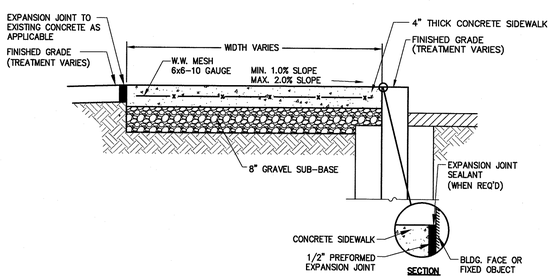

NOTES:
1. PROVIDE EXPANSION JOINTS AT MIN. 30 FT. O.C. WITH PRE- MOLDED JOINT FILLER.
2. PROVIDE CONTROL JOINTS AT 6' O.C.
3. PROVIDE BROOM FINISH IN DIRECTION PERPENDICULAR TO CURB.
4. CEMENT CONCRETE SHALL BE 4000 PSI-TYPE II
5. EXISTING GRAVEL SUB-BASE TO REMAIN IN AREAS WHERE NO TRENCHING IS PROPOSED.
6. SEE ROADWAY/SIDEWALK RECONSTRUCTION DETAIL FOR GRAVEL APPLICATION IN AREAS OF PROPOSED TRENCHING.

TYPICAL CEMENT CONCRETE SIDEWALK DETAIL
NOT TO SCALBOT TO SCALE

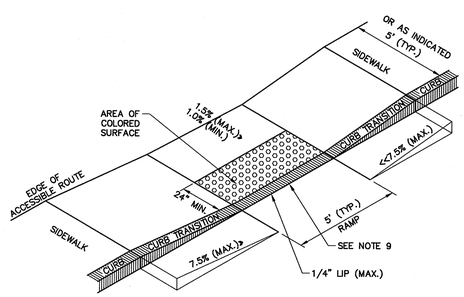

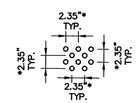

TRUNCATED DOMES (PLAN VIEW)

TRUNCATED DOMES (PROFILE)

*DIMENSIONS ARE CENTER TO CENTER

NOTES:
1. THE MAXIMUM ALLOWABLE SIDEWALK AND CURB RAMP CROSS SLOPES SHALL BE 1.5% (1% MIN.)
2. THE MAXIMUM ALLOWABLE SLOPE OF ACCESSIBLE ROUTE EXCLUDING CURB RAMPS SHALL BE 5%.
3. THE MAXIMUM ALLOWABLE SLOPE OF ACCESSIBLE ROUTE CURB RAMPS SHALL BE 7.5%.
4. A MINIMUM OF 3 FEET CLEAR SHALL BE MAINTAINED AT ANY PERMANENT OBSTACLE IN ACCESSIBLE ROUTE (I.E. HYDRANTS, UTILITY POLES, TREE WE;;S, SIGNS, ETC.)
5. BASE OF RAMP SHALL BE GRADED TO PREVENT PONDING.
6. SEE TYPICAL SIDEWALK SECTION FOR RAMP CONSTRUCTION.
7. WHERE ACCESSIBLE ROUTES ARE LESS THAN 5' IN WIDTH (EXCLUDING CURBING) A 5'x5' PASSING AREA SHALL BE PROVIDED AT INTERVALS NOT TO EXCEED 200 FEET.
8. ELIMINATE ALL CURBING AT RAMP (OTHER THAN VERTICAL CURBING, WHICH SHALL BE SET FLUSH) WHERE IT ABUTS ROADWAY OR OTHERWISE INDICATED.
9. DETECTABLE WARNING SHALL CONTRAST VISUALLY WITH ADJOINING SURFACES.
10. TRUNCATED DOMES AND ALL RELATED INSTALLED SURFACES TO BE INSTALLED ACCORDING TO MANUFACTURER'S SPECIFICATIONS. ALL DETECTABLE WARNING SURFACE INSTALLATIONS SHALL BE AT A MINIMUM AT LEAST AS NON SKID AS THE SURROUNDING PEDESTRIAN SURFACES.

ACCESSIBLE CURB RAMP (ACR) TYPE 'A'
NOT TO SCALE

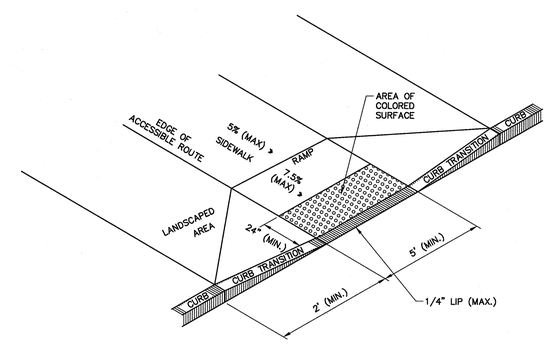

NOTE:
1. ACCESSIBLE CURB RAMP NOTES PROVIDED UNDER "ACCESSIBLE CURB RAMP – TYPE 'A' DETAIL ON THIS SHEET ARE APPLICABLE.

ACCESSIBLE CURB RAMP (ACR) TYPE "B"
NOT TO SCALE

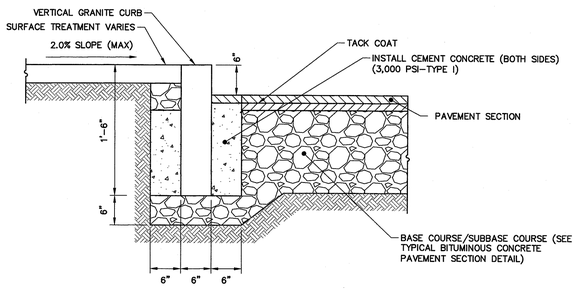

VERTICAL GRANITE CURB (VGC)
NOT TO SCALE

ISSUED FOR BID

980 Washington Street, Suite 325
Dedham, Massachusetts 02026
800.446.5518 | www.woodardcurran.com
WOODARD & CURRAN
COMMITMENT & INTEGRITY DRIVE RESULTS

THIS DOCUMENT IS THE PROPERTY OF WOODARD & CURRAN INC. AND ITS CLIENT. REPRODUCTION OR MODIFICATION WITHOUT WRITTEN PERMISSION IS PROHIBITED.

COMMONWEALTH OF MASSACHUSETTS
DAVID A. WHITE
No. 38580
PROFESSIONAL ENGINEER
4/14/16

REV	DESCRIPTION	DATE

DESIGNED BY: PMM
DRAWN BY: KCC
CHECKED BY: RJD
229256-C-05-06.dwg

CIVIL DETAILS 2

CITY OF QUINCY, MASSACHUSETTS
DEPARTMENT OF PLANNING AND COMMUNITY DEVELOPMENT
34 CODDINGTON STREET

ROSS GARAGE DEMOLITION AND TEMPORARY SURFACE RESTORATION PHASE 1

JOB NO.: 229256.00
DATE: APRIL 2016
SCALE: AS SHOWN
SHEET: 7 OF 15

C-06

\\wc\shared\Projects\229256 quincy ma - ross garage demolition\wip\ross garage demolition\Drawings\Current\Civil\229256-C-05-06.dwg, Apr 04, 2016 - 3:26pm

24x36 SHEET
1:1

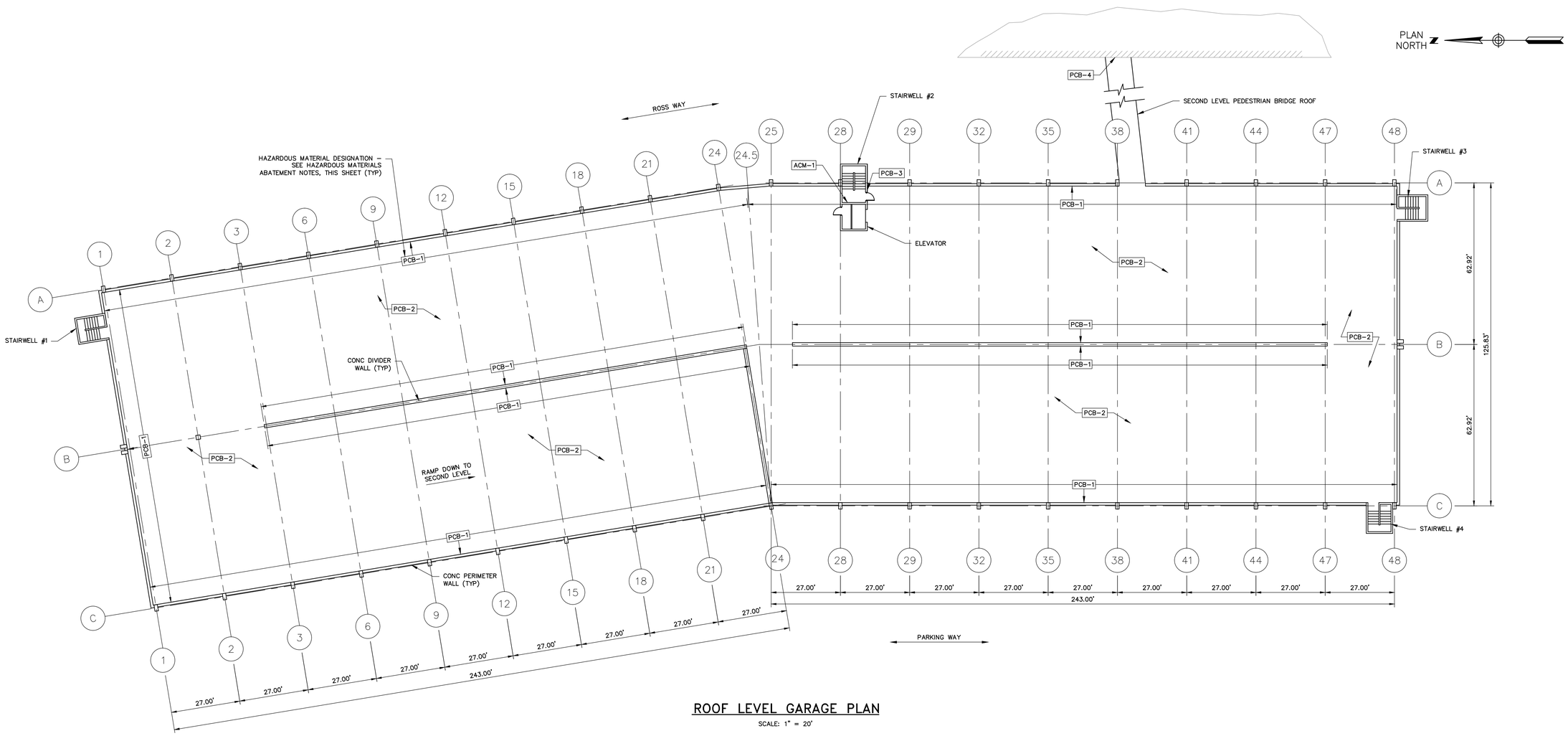

ROOF LEVEL GARAGE PLAN

SCALE: 1" = 20'

STRUCTURAL ABBREVIATIONS:

ACM	ASBESTOS–CONTAINING MATERIAL
APPROX	APPROXIMATELY
CB	CATCH BASIN
CONC	CONCRETE
DMH	DRAIN MANHOLE
DWGS	DRAWINGS
MIN	MINIMUM
PCB	POLYCHLORINATED BIPHENYL
SMH	STORM MANHOLE
TYP	TYPICAL
QTY	QUANTITY

HAZARDOUS MATERIALS ABATEMENT NOTES:

PCB–1 AS DESCRIBED IN THE PROJECT SPECIFICATIONS, CAULKING WITHIN THE CONCRETE DECKING TO CONCRETE WALL JOINTS HAS BEEN DETERMINED TO BE A PCB BULK PRODUCT WASTE. CAULKING AND ADJACENT CONCRETE TO A MINIMUM DISTANCE OF 12 INCHES AWAY FROM THE JOINT TO A MINIMUM DEPTH OF 2 INCHES TO BE REMOVED FOR OFF–SITE DISPOSAL AS PCB BULK PRODUCT WASTE AND MA02 HAZARDOUS WASTE IN ACCORDANCE WITH 40 CFR 761.62. FINAL EXTENT OF REMOVAL TO BE DETERMINED THROUGH VERIFICATION SAMPLING TO BE CONDUCTED BY THE OWNER'S CONSULTANT.

PCB–2 AS DESCRIBED IN THE PROJECT SPECIFICATIONS, CAULKING WITHIN THE CONCRETE TO CONCRETE DECK JOINTS HAS BEEN DETERMINED BY THE OWNER TO BE AN EXCLUDED PCB PRODUCT AS PER 40 CFR 761.3. CAULKING TO BE DISPOSED OF AT A FACILITY PERMITTED TO ACCEPT NON–TSCA MATERIALS CONTAINING PCBS AT THE AS–FOUND CONCENTRATIONS.

PCB–3 AS DESCRIBED IN THE PROJECT SPECIFICATIONS, WHITE PAINT ON THE CONCRETE SURFACES OF STAIRWELL #2 AND THE FIRST FLOOR STAIRWELL #1 CONNECTOR HAS BEEN DETERMINED BY THE OWNER TO BE AN EXCLUDED PCB PRODUCT AS PER 40 CFR 761.3. PAINT FROM THESE LOCATIONS IS TO BE DISPOSED OF AT A FACILITY PERMITTED TO ACCEPT NON–TSCA MATERIALS CONTAINING PCBS AT THE AS–FOUND CONCENTRATIONS.

PCB–4 AS DESCRIBED IN THE PROJECT SPECIFICATIONS, CAULKING ALONG THE SECOND LEVEL PEDESTRIAN BRIDGE TO BUILDING JOINTS HAS BEEN ASSUMED TO BE A PCB BULK PRODUCT WASTE FOR THE PURPOSES OF REMOVAL AND DISPOSAL. CAULKING AND BUILDING MATERIALS SCHEDULED TO BE REMOVED AS PART OF THE PROJECT SCOPE AND IN DIRECT CONTACT WITH THE CAULKING ARE TO BE REMOVED FOR OFF–SITE DISPOSAL AS A PCB BULK PRODUCT WASTE AND MA02 HAZARDOUS WASTE IN ACCORDANCE WITH 40 CFR 761.62.

ACM–1 PRIOR TO DEMOLITION, LEGALLY REMOVE, HANDLE, PACKAGE AND DISPOSE ALL EXISTING ASBESTOS ASPHALTIC ROOFING MATERIALS FROM THE ROOF OF THE STAIR TOWER/ELEVATOR SHAFT AS SPECIFIED IN THE CONTRACT DOCUMENTS AND AS REGULATED BY VARIOUS FEDERAL, STATE AND LOCAL AUTHORITIES HAVING JURISDICTION.

GENERAL NOTES:

1. CONTRACTOR SHALL FIELD VERIFY ALL DIMENSIONS AND LAYOUT BEFORE BIDDING AND CONSTRUCTION. WHERE ELEVATIONS OF EXISTING STRUCTURES ARE GIVEN, CONTRACTOR SHALL FIELD VERIFY THOSE RECORD DRAWING ELEVATIONS BEFORE CONSTRUCTION. IF EXISTING CONDITIONS DIFFER FROM THAT SHOWN ON THE ATTACHED DRAWINGS, NOTIFY ENGINEER BEFORE PROCEEDING WITH THE WORK.
2. FIELD VERIFY LOCATION OF ALL UTILITIES. LOCATIONS OF ALL UTILITIES ARE NOT SHOWN ON THE DRAWINGS.
3. CONTRACTOR SHALL COORDINATE ALL WORK WITH OWNER WITH RESPECT TO WORK HOURS, AVAILABLE WORK AREAS, DEMOLITION DISTURBANCE, ETC.
4. DURING DEMOLITION ACTIVITIES, CONTRACTOR SHALL MINIMIZE DISTURBANCE TO OWNER'S DAILY OPERATIONS DUE TO DUST, DEBRIS, EXCESSIVE NOISE, ETC. PROVIDE TEMPORARY BARRICADES AND OTHER FORMS OF PROTECTION AS NECESSARY TO PROTECT THE OWNER'S PERSONNEL, PROPERTY AND THE GENERAL PUBLIC FROM INJURY.
5. ALL MATERIAL SHALL BE FURNISHED BY THE CONTRACTOR AND ALL DEMOLITION, AND OTHER WASTE DEBRIS SHALL BE REMOVED AND DISPOSED OF AT AN APPROVED FACILITY BY THE CONTRACTOR, UNLESS NOTED OTHERWISE. COSTS ASSOCIATED WITH TESTING AND/OR CHARACTERIZATION OF WASTE DEBRIS, AS MAY BE REQUIRED TO PERMIT DISPOSAL AT THE APPROPRIATE WASTE FACILITY, SHALL BE THE RESPONSIBILITY OF THE CONTRACTOR. FOR POSSIBLE HAZARDOUS MATERIALS RELATING TO THE DEMOLITION WORK, SEE GENERAL NOTE 10 AND HAZARDOUS MATERIALS ABATEMENT NOTES, THIS SHEET. ANY MATERIALS TESTING BEYOND THAT PROVIDED BY OWNER SHALL BE PROVIDED BY CONTRACTOR.
6. CARE SHALL BE TAKEN WHEN WORKING WITH OR AROUND ALL EXISTING MATERIALS. DAMAGE TO EXISTING MATERIALS SHALL BE REPAIRED BY THE CONTRACTOR AT NO ADDITIONAL EXPENSE TO THE OWNER. RESTORE ALL AREAS DISTURBED BY THE WORK TO MATCH EXISTING CONSTRUCTION/FINISH.
7. THE CONTRACTOR SHALL OBTAIN ALL STATE, LOCAL, UTILITY, ETC. PERMITS REQUIRED FOR COMPLETION OF WORK. ANY AND ALL FEES ASSOCIATED WITH THIS WORK ARE THE RESPONSIBILITY OF THE CONTRACTOR.
8. ANY WORK DETERMINED TO BE DEFECTIVE/INCOMPLETE BY THE ENGINEER SHALL BE REPAIRED, REWORKED AND/OR COMPLETED AS PER THE APPROVAL OF THE ENGINEER.
9. PROTECTION FROM DEMOLITION: ALL DEMOLITION ACTIVITIES AND SEQUENCING SHALL BE PLANNED AND PERFORMED IN A MANNER THAT WILL PROTECT ALL ADJACENT PROPERTY/STRUCTURES AND THE PUBLIC FROM DAMAGE OR HARM.
10. HAZARDOUS MATERIALS: ALL IMPACTED MATERIAL WORK AND DISPOSAL SHALL BE IN COMPLIANCE WITH ALL APPLICABLE LOCAL, STATE, AND FEDERAL RULES AND REGULATIONS AS INDICATED WITHIN PROJECT DRAWINGS AND SPECIFICATIONS.

GARAGE SUPERSTRUCTURE NOTES:

1. EXISTING PARKING GARAGE STRUCTURE SHALL BE DEMOLISHED IN ITS ENTIRETY AS SHOWN ON THE DRAWINGS AND AS SPECIFIED IN SPECIFICATION SECTION 02 05 05 – DEMOLITION, INCLUDING ALL ITEMS ABOVE GRADE AND ALL ITEMS BELOW GRADE TO THE DEMOLITION DEPTH LIMITS AS INDICATED IN THE FOUNDATION SCHEDULE AND NOTES.
2. EXISTING PARKING GARAGE IS A PRECAST CONCRETE STRUCTURE WITH ELEVATED DECKS CONSISTING OF 9'–0" WIDE SINGLE TEE BEAM/SLAB SECTIONS SPANNING BETWEEN COLUMN LINES A, B AND C.
3. CONTRACTOR SHALL BE RESPONSIBLE FOR INSPECTING ALL ABOVE–GRADE CONSTRUCTION PRIOR TO PREPARING BID. THESE DRAWINGS ARE NOT INTENDED TO FULLY REPRESENT ALL FEATURES OF THE GARAGE SUPERSTRUCTURE.
4. CONTRACTOR SHALL BE RESPONSIBLE FOR COORDINATING TRAFFIC FLOW AND ESTABLISHING SAFE WORKING ZONES DURING THE WORK, AS REQUIRED TO PROTECT PUBLIC SAFETY, WORKER SAFETY, AND ANY ADJACENT PROPERTIES.
5. CONTRACTOR SHALL BE RESPONSIBLE TO PROVIDE TEMPORARY SHORING AS REQUIRED DURING THE DEMOLITION TO SAFELY DEMOLISH AND DISASSEMBLE THE GARAGE SUPERSTRUCTURE AND TO PROTECT PUBLIC SAFETY, WORKER SAFETY, AND ANY ADJACENT PROPERTIES.

ISSUED FOR BID

980 Washington Street, Suite 325
Dedham, Massachusetts 02026
800.446.3516 | www.woodardcurran.com

COMMITMENT & INTEGRITY DRIVE RESULTS

WOODARD & CURRAN

THIS DOCUMENT IS THE PROPERTY OF WOODARD & CURRAN INC., AND ITS CLIENT. REPRODUCTION OR MODIFICATION WITHOUT WRITTEN PERMISSION IS PROHIBITED.

COMMONWEALTH OF MASSACHUSETTS
JAMES P. STUROS
STRUCTURAL
No. 43268
REGISTERED PROFESSIONAL ENGINEER

REV	DESCRIPTION	DATE

DESIGNED BY: JPS
DRAWN BY: DMB
CHECKED BY: JPS/SJT
229256-S-01.dwg

ROOF LEVEL GARAGE
PLAN & NOTES

CITY OF QUINCY, MASSACHUSETTS
DEPARTMENT OF PLANNING AND COMMUNITY DEVELOPMENT
34 CODDINGTON STREET

ROSS GARAGE DEMOLITION AND TEMPORARY SURFACE RESTORATION PHASE 1

JOB NO.:229256.00
DATE: APRIL 2016
SCALE: AS NOTED
SHEET: 8 OF 15

S-01

\\we\shared\Projects\229256 quincy ma – ross garage demolition\wip\ross garage demolition\Drawings\Current\Structural\229256-S-01.dwg, Apr 05, 2016 – 8:55am

24x36 SHEET
1:1

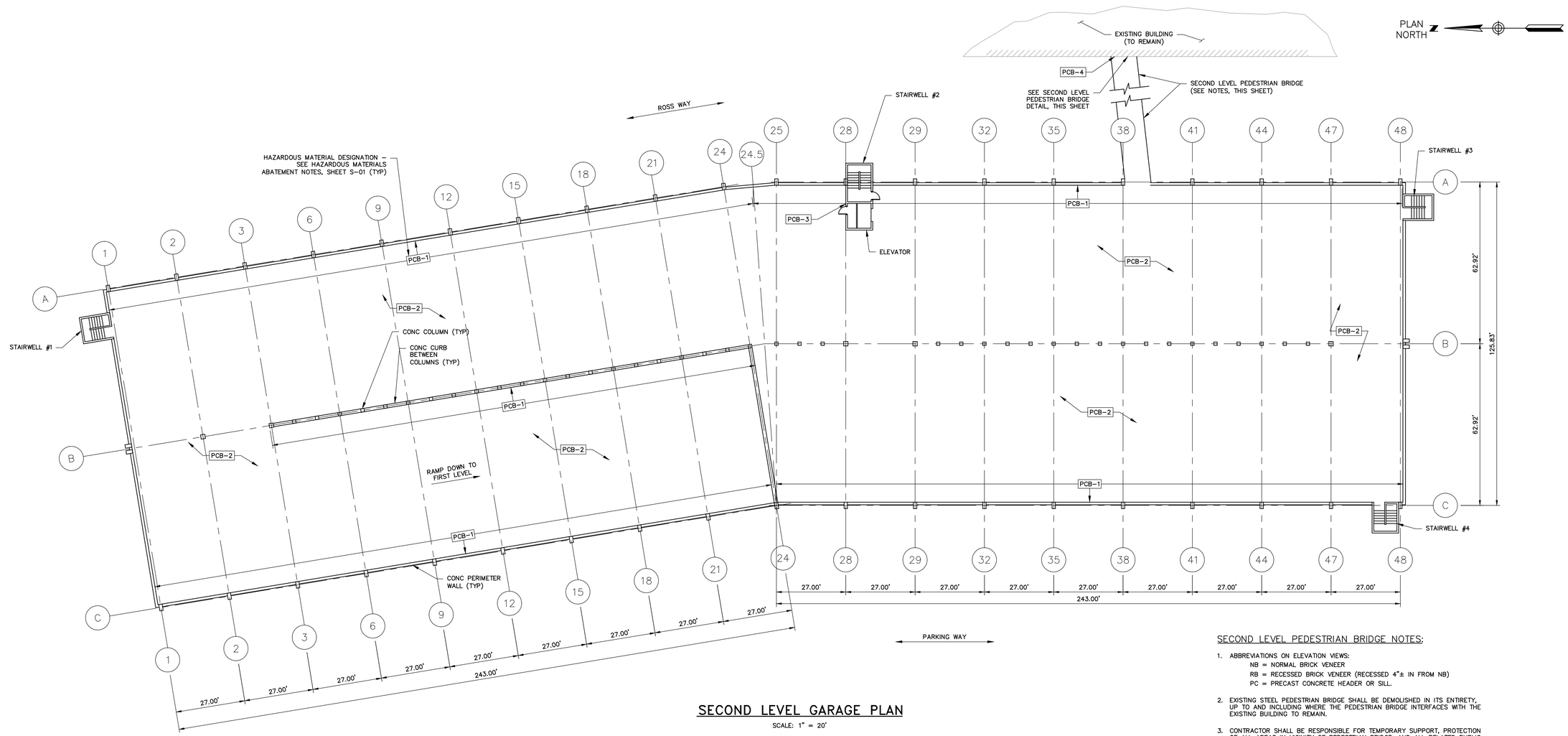

SECOND LEVEL GARAGE PLAN

SCALE: 1" = 20'

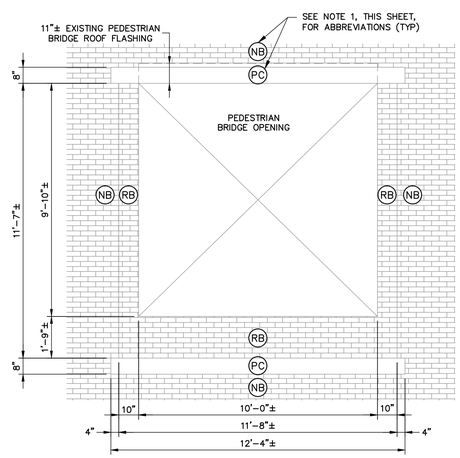

EXISTING WEST ELEVATION

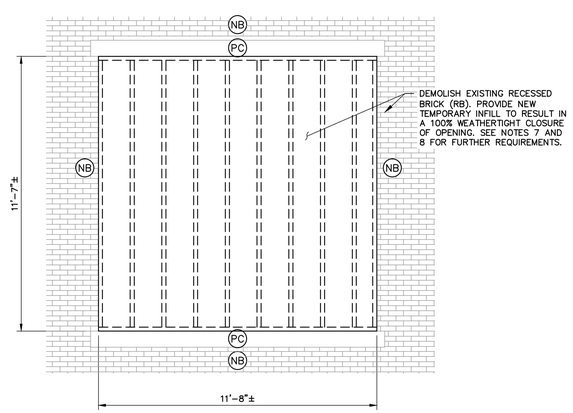

PROPOSED WEST ELEVATION

1 / S-02 SECOND LEVEL PEDESTRIAN BRIDGE DETAIL

SCALE: 1:3

SECOND LEVEL PEDESTRIAN BRIDGE NOTES:

1. ABBREVIATIONS ON ELEVATION VIEWS:
   NB = NORMAL BRICK VENEER
   RB = RECESSED BRICK VENEER (RECESSED 4"± IN FROM NB)
   PC = PRECAST CONCRETE HEADER OR SILL.
2. EXISTING STEEL PEDESTRIAN BRIDGE SHALL BE DEMOLISHED IN ITS ENTIRETY, UP TO AND INCLUDING WHERE THE PEDESTRIAN BRIDGE INTERFACES WITH THE EXISTING BUILDING TO REMAIN.
3. CONTRACTOR SHALL BE RESPONSIBLE FOR TEMPORARY SUPPORT, PROTECTION OF ALL AREAS IN VICINITY OF PEDESTRIAN BRIDGE, AND ALL RELATED PUBLIC AND TRAFFIC SAFETY UNTIL THE PEDESTRIAN BRIDGE IS FULLY DEMOLISHED.
4. ALL ROOF FLASHING ABOVE PEDESTRIAN BRIDGE SHALL BE FULLY REMOVED, INCLUDING ALL SEALANTS AND OTHER RESIDUAL, GRINDING ALL MATERIAL OFF TO EXPOSE EXISTING BRICK VENEER. REPOINT MORTAR JOINTS ALONG FLASHING IF JOINTS MUST BE DISTURBED TO FULLY REMOVE THE FLASHING. FOR POSSIBLE HAZARDOUS MATERIALS RELATING TO THE DEMOLITION WORK, SEE GENERAL NOTE 10 AND HAZARDOUS MATERIALS ABATEMENT NOTES, SHEET S-01.
5. CONTRACTOR SHALL COORDINATE FULLY WITH EXISTING BUILDING'S REPRESENTATIVE(S) DURING CONSTRUCTION TO ENSURE THAT CONSTRUCTION IS FULLY COORDINATED WITH FACILITY'S DAILY OPERATIONS AND PUBLIC SAFETY IS PROTECTED.
6. DEMOLISH ALL RECESSED BRICK BACK TO FACE OF ORIGINAL MASONRY OPENING (11'-7"± HIGH x 11'-8"± WIDE).
7. PROVIDE 16-GAGE 6" DEEP METAL STUDS @ 16" OC LIGHT GAUGE METAL BACK-UP WALL TO INFILL OPENING WITH 5 1/2" OF MINERAL FIBER BATT INSULATION. FASTEN PERIMETER STUDS AND TRACKS TO MASONRY WITH 3/8" DIAMETER GALVANIZED STEEL ADHESIVE ANCHORS AT 24" OC, HILTI HVA OR EQUAL. INTERIOR FINISH SHALL BE 6-MIL POLY FILM WITH 5/8" TYPE X GWB FINISHED AND PAINTED TO MATCH EXISTING, INCLUDING SILL, HEAD, AND JAMBS. EXTERIOR FINISH SHALL BE 1/2" DENSGLASS SHEATHING OR EQUAL. TYVEK BUILDING PAPER OR EQUAL, AND HARDIE PANEL "SIERRA 8" 0.312" VERTICAL SIDING (INSTALL PER MANUFACTURER'S RECOMMENDATIONS), OR EQUAL, PAINTED WITH COLOR TO MATCH EXISTING BRICK. PROVIDE ALUMINUM FLASHING AT TOP (BELOW HEADER) AND BOTTOM (OVER SILL). PROVIDE CONTINUOUS POLYURETHANE SEALANT AT PERIMETER, EQUAL TO SIKAFLEX 1A.
8. FACE OF FINISHED INFILL SHALL BE RECESSED 2" FROM EXISTING FACE OF "NB" BRICK VENEER. CONTRACTOR SHALL PROVIDE SHOP DRAWING OF INFILL CONSTRUCTION AND EXISTING CONDITIONS FOR ENGINEER'S REVIEW PRIOR TO CONSTRUCTION. CONTRACTOR SHALL WARRANTY THAT THIS ENCLOSURE IS WEATHERTIGHT FOR 1 YEAR AFTER SUBSTANTIAL COMPLETION.
9. RECORD DRAWINGS OF EXISTING BUILDING ARE NOT AVAILABLE. ONCE EXISTING CONDITIONS ARE EXPOSED AND REVEALED, CONTRACTOR SHALL SUBMIT PROPOSED CROSS SECTION AND MATERIALS FOR INFILL OF OPENING TO MATCH EXISTING.
10. ALL WORK TO REMOVE AND DISPOSE PEDESTRIAN BRIDGE SHALL BE PERFORMED ON WEEKENDS.

ISSUED FOR BID

980 Washington Street, Suite 325
Dedham, Massachusetts 02026
800.446.3516 | www.woodardcurran.com
WOODARD & CURRAN
COMMITMENT & INTEGRITY DRIVE RESULTS

THIS DOCUMENT IS THE PROPERTY OF WOODARD & CURRAN INC., AND ITS CLIENT. REPRODUCTION OR MODIFICATION WITHOUT WRITTEN PERMISSION IS PROHIBITED.

COMMONWEALTH OF MASSACHUSETTS
JAMES P. STUROS
STRUCTURAL
No. 43268
REGISTERED PROFESSIONAL ENGINEER

REV	DESCRIPTION	DATE

DESIGNED BY: JPS
DRAWN BY: DMB
CHECKED BY: JPS/SJT
229256-S-02.dwg

SECOND LEVEL GARAGE
PLAN, NOTES, & DETAILS

CITY OF QUINCY, MASSACHUSETTS
DEPARTMENT OF PLANNING AND COMMUNITY DEVELOPMENT
34 CODDINGTON STREET

ROSS GARAGE DEMOLITION AND TEMPORARY SURFACE RESTORATION PHASE 1

JOB NO.: 229256.00
DATE: APRIL 2016
SCALE: AS NOTED
SHEET: 9 OF 15

S-02

\\wc\shares\Projects\229256_quincy_ma - ross garage demolition\wip\ross garage demolition\Drawings\Current\Structural\229256-S-02.dwg, Apr 05, 2016 - 8:55am

24x36 SHEET
1:1

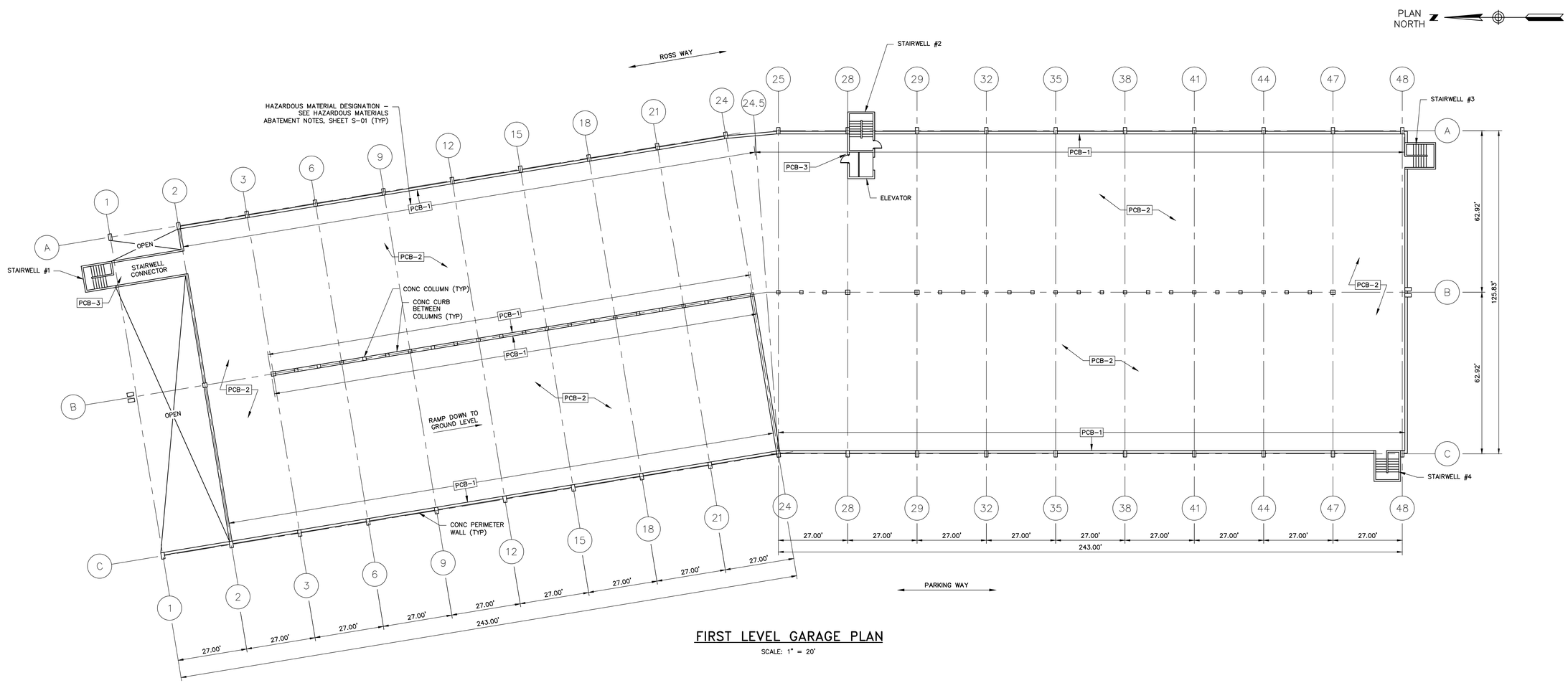

FIRST LEVEL GARAGE PLAN

SCALE: 1" = 20'

ISSUED FOR BID

980 Washington Street, Suite 325
Dedham, Massachusetts 02026
800.446.3516 | www.woodardcurran.com

COMMITMENT & INTEGRITY DRIVE RESULTS

WOODARD & CURRAN

THIS DOCUMENT IS THE PROPERTY OF WOODARD & CURRAN INC., AND ITS CLIENT. REPRODUCTION OR MODIFICATION WITHOUT WRITTEN PERMISSION IS PROHIBITED.

COMMONWEALTH OF MASSACHUSETTS
JAMES P. STURGIS
STRUCTURAL
No. 43268
REGISTERED PROFESSIONAL ENGINEER

REV	DESCRIPTION	DATE

DESIGNED BY: JPS
DRAWN BY: DMB
CHECKED BY: JPS/SJT
229256-S-03.dwg

FIRST LEVEL GARAGE PLAN

CITY OF QUINCY, MASSACHUSETTS
DEPARTMENT OF PLANNING AND COMMUNITY DEVELOPMENT
34 CODDINGTON STREET

ROSS GARAGE DEMOLITION AND TEMPORARY SURFACE RESTORATION PHASE 1

JOB NO.:229256.00
DATE: APRIL 2016
SCALE: AS NOTED
SHEET: 10 OF 15

S-03

\\wc\shared\Projects\229256 quincy ma - ross garage demolition\wip\ross garage demolition\Drawings\Current\Structural\229256-S-03.dwg, Apr 05, 2016 - 8:55am

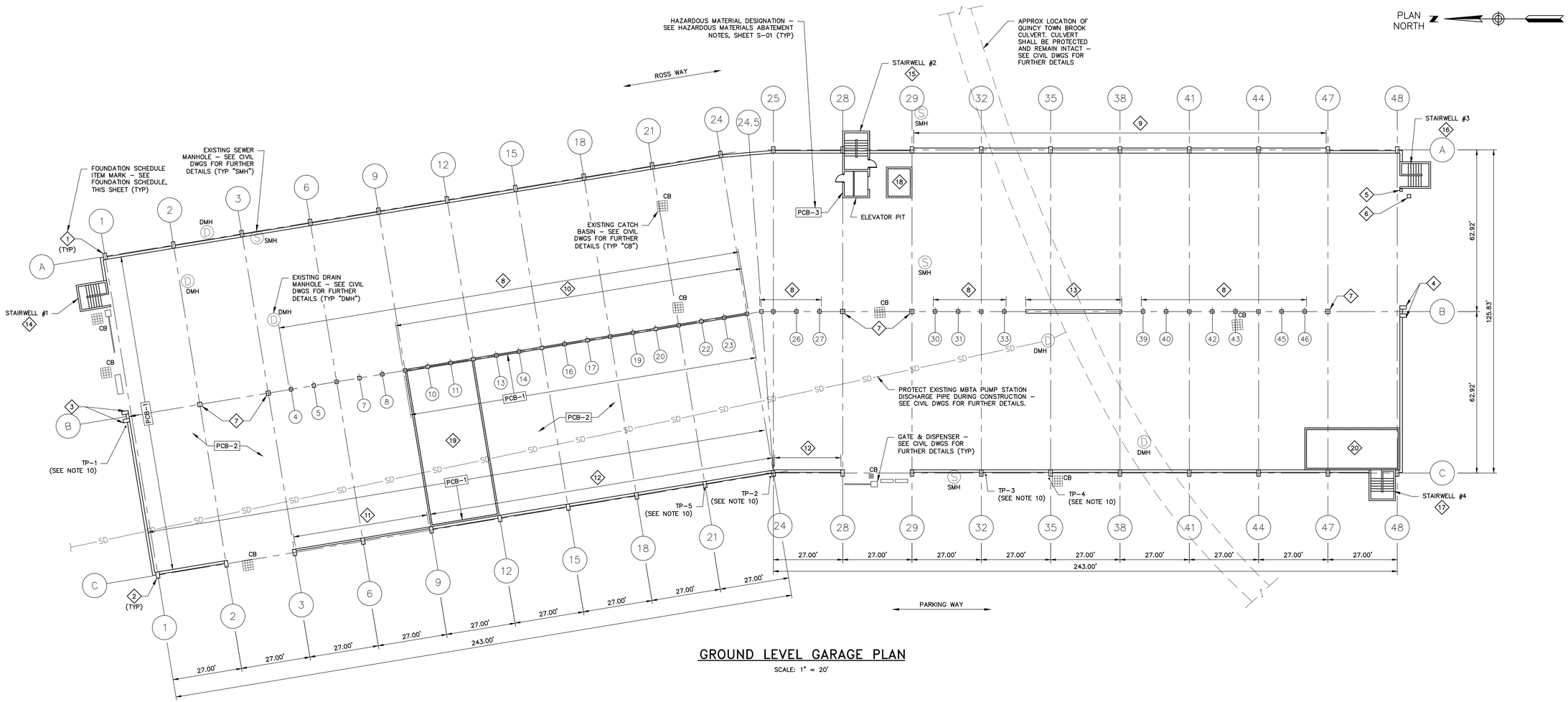

GROUND LEVEL GARAGE PLAN

SCALE: 1" = 20'

FOUNDATION SCHEDULE

ITEM #	DESCRIPTION	GRID LOCATION(S)	N-S DIM'N	E-W DIM'N	QTY	MIN DEMO DEPTH	REMARKS
1	SINGLE CONC PERIMETER COLUMNS	A-1 THRU A-48	16"	30"	20	4'	
2	SINGLE CONC PERIMETER COLUMNS	C-1 THRU C-48	16"	30"	19	4'	
3	DOUBLE CONC PERIMETER COLUMNS	B-1	2 x 16"	2 x 30"	2	4'	22" SPACE BETWEEN COLUMNS
4	DOUBLE CONC PERIMETER COLUMNS	B-48	2 x 16"	2 x 30"	2	4'	22" CONC FILL BETWEEN COLUMNS
5	STAIR #3 CONC SUPPORT COLUMN	A.2-48	12"	12"	1	4'	EXTENDS 7' ABOVE GRADE
6	STAIR #3 CONC SUPPORT COLUMN	A.2-48.2	18"	18"	1	4'	EXTENDS 7' ABOVE GRADE
7	SINGLE CONC INTERIOR COLUMNS	B-2, 3, 28, 29, & 47	20"	20"	5	4'	
8	SINGLE CONC INTERIOR COLUMNS	B-4 THRU B-24; B-24.5, 25, 26 & 27; B-30 THRU B-33; B-39 THRU B-46	16"	16"	37	4'	
9	CONC RETAINING WALL BETWEEN COLUMNS	A-29 THRU A-47	25'-8"	24"	6	4'	
10	CMU RETAINING WALL BETWEEN COLUMNS	B-9 THRU B-24	25'-8"	8"	5	4'	
11	CMU RETAINING WALL BETWEEN COLUMNS	C-3 THRU C-9	25'-8"	8"	2	4'	
12	CONC RETAINING WALL BETWEEN COLUMNS	C-9 THRU C-28	25'-8"	13"	6	4'	
13	CONC SUPPORT WALL	B-34 THRU B-38	40'-0"	16"	1	4'	
14	STAIRWELL #1 CONC ENCLOSURE	A-1	12'-0"	10'-4"	1	4'	
15	STAIRWELL #2 CONC ENCLOSURE	A-28	10'-6"	26'-0"	1	4'	INCLUDES ELEVATOR SHAFT
16	STAIRWELL #3 CONC ENCLOSURE	A-48	12'-0"	10'-4"	1	4'	
17	STAIRWELL #4 CONC ENCLOSURE	C-48	10'-0"	12'-0"	1	4'	
18	CMU STORAGE ROOM	A-29	10'-0"	12'-0"	1	4'	GROUND LEVEL
19	CMU OFFICE/STORAGE ROOM	B-9/C-9 TO B-12/C-12	27'-0"	63'-0"	1	4'	GROUND LEVEL
20	CMU OFFICE/STORAGE ROOM	C-48	37'-0"	16'-4"	1	4'	GROUND LEVEL

FOUNDATION SCHEDULE NOTES:

1. THE INFORMATION SHOWN IN THE FOUNDATION SCHEDULE IS APPROXIMATE AND IS PROVIDED FOR INFORMATION ONLY. ALL ITEMS SHALL BE VERIFIED BY CONTRACTOR PRIOR TO BIDDING.
2. THE PURPOSE OF THIS SCHEDULE IS TO PROVIDE INFORMATION ON ALL ITEMS AS THEY ENTER THE GROUND. NO RECORD DRAWINGS ARE AVAILABLE THAT SHOW FOUNDATION DIMENSIONS OR CONFIGURATION BELOW GRADE. IT SHALL BE ASSUMED THAT THESE ITEMS EXTEND BELOW GRADE AND WILL REQUIRE BELOW-GRADE DEMOLITION TO THE LIMITS INDICATED.
3. DEMOLITION SHALL BE PERFORMED OF ALL ITEMS TO THE 'DEMO DEPTH' INDICATED IN THE SCHEDULE.
4. ITEMS SHALL BE SAW-CUT AT OR BELOW THE 'DEMO DEPTH' INDICATED IN THE SCHEDULE.
5. DIMENSIONS SHOWN ARE AT THE POINT WHERE THE ITEM ENTERS THE GROUND. DIMENSIONS ABOVE GROUND MAY DIFFER.
6. SHOULD THE CONTRACTOR ENCOUNTER ANY CONDITIONS DIFFERENT FROM THAT ASSUMED, THEY SHALL NOTIFY THE ENGINEER IMMEDIATELY.
7. BURIED UTILITIES ARE NOT SHOWN AND SHALL BE COORDINATED AND LOCATED USING DIG-SAFE, TOWN, AND UTILITY RESOURCES.
8. ALL OTHER ITEMS INCLUDING, BUT NOT LIMITED TO, METAL PIPES, BOLLARDS, RAILINGS, FENCES, SIGN POSTS, FLAG POLES, CURBING, ISLANDS, GATE OR TICKET BASES, PARKING ATTENDANT BOOTHS, UTILITIES, LIGHTING, CONC SIDEWALKS, CONC STEPS, CONC RAMPS, CONC BARRIERS, AND BITUMINOUS PAVING, SHALL ALSO BE DEMOLISHED TO A MINIMUM OF 4' BELOW GRADE. THESE ITEMS ARE NOT SHOWN IN SCHEDULE, BUT THEIR DEMOLITION SHALL BE INCLUDED IN THE BASE BID PRICE.
9. ITEM NUMBERS ARE DEPICTED ON THE PLAN VIEW AS "◇8".
10. SEE APPENDIX OF SPECIFICATION FOR TEST PIT (TP) LOGS FROM 3-22-2016 – DEPTH TO TOP OF COLUMN FOOTING ARE LISTED BELOW:
    TP-1 @ B-1: 5'-0"
    TP-2 @ C-24: 6'-0" (MIN)
    TP-3 @ C-32: 4'-0"
    TP-4 @ C-35: 5'-0"
    TP-5 @ C-21: 4'-0"

ISSUED FOR BID

980 Washington Street, Suite 325
Dedham, Massachusetts 02026
800.446.3516 | www.woodardcurran.com
WOODARD & CURRAN
COMMITMENT & INTEGRITY DRIVE RESULTS

THIS DOCUMENT IS THE PROPERTY OF WOODARD & CURRAN INC. AND ITS CLIENT. REPRODUCTION OR MODIFICATION WITHOUT WRITTEN PERMISSION IS PROHIBITED.

COMMONWEALTH OF MASSACHUSETTS JAMES P. STUROS STRUCTURAL No. 43268 REGISTERED PROFESSIONAL ENGINEER

REV	DESCRIPTION	DATE

DESIGNED BY: JPS
DRAWN BY: DMB
CHECKED BY: JPS/SJT
229256-S-04.dwg

GROUND LEVEL GARAGE PLAN, SCHEDULE, & NOTES

CITY OF QUINCY, MASSACHUSETTS
DEPARTMENT OF PLANNING AND COMMUNITY DEVELOPMENT
34 CODDINGTON STREET

ROSS GARAGE DEMOLITION AND TEMPORARY SURFACE RESTORATION PHASE 1

JOB NO.:229256.00
DATE: APRIL 2016
SCALE: AS NOTED
SHEET: 11 OF 15

S-04

24x36 SHEET
1:1

\\wc\shared\Projects\229256 quincy ma - ross garage demolition\wip\ross garage demolition\Drawings\Current\Structural\229256-S-04.dwg, Apr 05, 2016 - 8:55am

24x36 SHEET
1:1

GENERAL

- P1-## — HOME RUN. ARROWS INDICATE NUMBER OF CIRCUITS, CROSS LINES INDICATE NUMBER OF WIRES, OTHER THAN TWO (2) PLUS BOND, WIRE SIZE NOT SHOWN INDICATES #12AWG MIN.
- INDICATES CIRCUIT NUMBER
- PANEL DESIGNATION
- WIRING IN RACEWAY
- WIRING IN RACEWAY CONCEALED UNDERGROUND OR UNDERSLAB, MINIMUM 3/4"C
- 3/C #nn W/GND — EquipNo-P — CONDUIT AND CABLE ID TAG
- CONDUIT TURNING UP
- CONDUIT TURNING DOWN
- CONDUIT STUB
- EY CONDUIT SEAL
- FLEXIBLE NON-METALLIC CONDUIT
- PANELBOARD
- CP — CONTROL PANEL
- ATC — AUTOMATIC TEMPERATURE CONTROL PANEL
- ISBP — INTRINSIC SAFETY BARRIER PANEL
- POWER COMPANY METER
- HS — LOCAL SELECTOR SWITCH
  H/O/A — H/O/A – HAND/OFF/AUTO
  H/O/R – HAND/OFF/REMOTE
  L/O/R – LOCAL/OFF/REMOTE
- PUSHBUTTON STATION, WITH "EM" EMERGENCY
- J — JUNCTION BOX
- MD — MOTORIZED DAMPER
- T — THERMOSTAT
- R — RELAY
- BT — DOOR BELL/BUZZER AND TRANSFORMER – MTD CL UP 7'-0" AFF
- x-# — EQUIP# — EQUIPMENT TAGS
- X — KEYED NOTE TAG
- X — REVISION TRIANGLE
- BRACKET

POWER

- NON-FUSED SAFETY SWITCH
- F — FUSED SAFETY SWITCH
- NON-FUSED DISCONNECT/MAGNETIC MOTOR STARTER
- M — MANUAL MOTOR SWITCH (MOTOR RATED SWITCH), TOGGLE OPERATED, SINGLE PHASE. 1 OR 2 POLE AS REQUIRED
- CB 100A — ENCLOSED CIRCUIT BREAKER W/AMPERE RATING
- M — ELECTRIC MOTOR, NUMBER INDICATES HORSEPOWER RATING, "F" INDICATES FRACTIONAL LESS THAN 1/20HP OR 100W
- T — TRANSFORMER
- P — POWER POLE
- DUPLEX RECEPTACLE, NEMA 5-20R – MTD CL UP 24" OR AS NOTED."WP" WEATHER PROOF, "G" PROTECTED BY GFCI RECEPTACLE OR BREAKER UPSTREAM, "H" MOUNTED 0'-6" BELOW CEILING, "TV" MOUNT 7'-6" UP
- DOUBLE DUPLEX RECEPTACLE, NEMA 5-20R – MTD CL UP 24" OR AS NOTED
- SINGLE RECEPTACLE, NEMA 5-20R – MTD CL UP 24" OR AS NOTED
- GFCI DUPLEX RECEPTACLE, NEMA 5-20R – MOUNTED CL UP 48" OR 6" ABOVE COUNTER
- DOUBLE DUPLEX GFCI RECEPTACLE, NEMA 5-20R – MOUNTED CL UP 48" OR 6" ABOVE COUNTER
- FLUSH FLOOR OUTLET, DUPLEX RECEPTACLE, NEMA 5-20R
- MULTI SERVICE FLUSH FLOOR BOX WITH DUPLEX RECEPTACLE AND PROVISIONS FOR DATA
- POWER RECEPTACLE, NEMA CONFIGURATION AS NOTED OR AS REQUIRED FOR EQUIPMENT SERVED.
- FLUSH CEILING MTD DEVICE BOXES, ONE W/ DUPLEX RCPT FOR PROJECTOR POWER AND ONE FOR DATA TO SERVE OH PROJECTOR. RUN ONE 1 1/2"C TO JBOX LOCATED AT FRONT OF ROOM FOR PROJECTOR CABLE PATHWAY. VERIFY FINAL LOCATION W/ OWNER PRIOR TO ROUGH IN.
- MULITI-OUTLET POWER STRIP, MOUNT 0'-6" ABOVE COUNTERTOP, RECEPTACLE SPACING AS NOTED.

MISCELLANEOUS

- DETAIL # / SHEET # — SECTION CALL OUT
- DETAIL TITLE — 1 / X-0X — DETAIL CALL OUT

LIGHTING

- 2x4 FLUOREXCENT FIXTURE
- Ab — ASSOCIATED CONTROL DEVICE; FIXTURE TYPE (SEE LIGHT FIXTURE SCHEDULE)
- 1x4 FLUORESCENT FIXTURE
- 2x2 FLUORESCENT FIXTURE
- FIXTURE WIRED TO UNSWITCHED NORMAL CIRCUIT
- FIXTURE WIRED TO UNSWITCHED EMERGENCY CIRCUIT
- FIXTURE WIRED TO SWITCHED EMERGENCY CIRCUIT
- DOWN LIGHT
- FLUORESCENT STRIP
- WALL MOUNTED FIXTURES
- POLE MOUNTED SITE LIGHTING FIXTURE
- ab — FIXTURE TYPE (SEE LIGHT FIXTURE SCHEDULE)
- FLOOD LIGHT
- EXIT SIGN, CEILING MOUNTED. ARROW INDICATES EGRESS DIRECTION. SHADING INDICATES SIGN FACE. NUMERAL INDICATES BATTERY UNIT CONNECTED
- EXIT SIGN, WALL MOUNTED 7'-6" AFF OR 0'-6" ABOVE DOOR. SHADING INDICATES SIGN FACE. NUMERAL INDICATES BATTERY UNIT CONNECTED TO.
- BATT — DUAL HEAD EMERGENCY LIGHT BATTERY PACK WITH NUMBER OF HEADS AS INDICATED – WALL MOUNTED MTD 7'-6" AFF. NUMERAL INDICATES BATTERY ID NUMBER.
- TANDEM EMERGENCY LIGHT BATTERY PACK & EXIT SIGN – WALL MOUNTED MTD 7'-6" AFF OR 0,-6" ABOVE DOOR. NUMERAL INDICATES BATTERY ID NUMBER.
- REMOTE EMERGENCY LIGHTING HEAD – WALL MOUNTED MTD 7'-6" AFF. NUMERAL INDICATES BATTERY UNIT CONNECTED TO.
- S — SINGLE POLE TOGGLE SWITCH – MTD CL UP 4'-0" AFF
- S_2 — DOUBLE POLE TOGGLE SWITCH – MTD CL UP 4'-0" AFF
- S_3 — 3-WAY TOGGLE SWITCH – MTD CL UP 4'-0" AFF
- S_4 — 4-WAY TOGGLE SWITCH – MTD CL UP 4'-0" AFF
- S_M — WALL MOUNTED OCCUPANCY SENSOR – MTD CL UP 4'-0" AFF
- S_P — TOGGLE SWITCH WITH PILOT LIGHT – MTD CL UP 4'-0" AFF
- S_D — DIMMER SWITCH – MTD CL UP 4'-0" AFF
- S_{LV} — LOW VOLTAGE SWITCH – MTD CL UP 4'-0" AFF
- a — OCCUPANCY SENSOR; a. INDICATES CONTROLLED FIXTURE
- PC — PHOTOCELL
- LC — LIGHTING CONTRACTOR
- MS — MOTION SENSOR

FIRE ALARM DIAGRAM SYMBOLS

- FACP — FIRE ALARM CONTROL PANEL
- FAA — FIRE ALARM ANNUNCIATOR
- FCPS — FIELD CHARGER POWER SUPPLY
- M — FIRE ALARM MASTER BOX
- K — KNOX BOX
- F — FIRE ALARM MANUAL PULL STATION – WALL MTD CL UP 4'-0"
- HL — FIRE ALARM AUDIBLE/VISIBLE NOTIFICATION APPLIANCE CANDELA (CD) POWER PER NFPA 72 OR AS NOTED – WALL MTD BOTTOM UP 80" AFF. "H" HORN, "V" VOICE.
- L — FIRE ALARM VISUAL NOTIFICATION APPLIANCE CANDELA (CD) POWER PER NFPA 72 OR AS NOTED – WALL MTD BOTTOM UP 80" AFF
- CEILING MOUNTED SMOKE DETECTOR
- CEILING MOUNTED HEAT DETECTOR
- DUCT SMOKE DETECTOR S=SUPPLY, R=RETURN
- FS — SPRINKLER SYSTEM FLOW SWITCH
- TS — SPRINKLER SYSTEM TAMPER SWITCH
- PS — SPRINKLER SYSTEM PRESSURE SWITCH
- DH — FIRE ALARM SYSTEM MAGNETIC DOOR HOLDER
- Z — MONITOR MODULE
- C — CONTROL MODULE
- R — RELAY MODULE

COMMUNICATIONS

- TEL — TELEPHONE BACKBOARD
- WX — PROVISIONS FOR TELEPHONE OUTLET. TWO-GANG WALL BOX WITH ONE 1"C STUB TO ABOVE ACCESSIBLE CEILING – MTD CL UP SAME AS ASSOCIATED RECEPTACLE
  W-INDICATES WALL MOUNTED AT 60" AFF
  P-INDICATES PAYPHONE MOUNTED AT 4'-0" AFF
  X-INDCATES NUMBER OF JACKS, SINGLE BOX
- PROVISIONS FOR DATA OUTLET. TWO-GANG WALL BOX WITH ONE 1"C STUB TO ABOVE ACCESSIBLE CEILING – MTD CL UP SAME AS ASSOCIATED RECEPTACLE. SUBSCRIPTS AS NOTED ABOVE.
- 2D2T — PROVISIONS FOR TELEPHONE & DATA OUTLET. TWO-GANG WALL BOX WITH ONE 1"C STUB TO ABOVE ACCESSIBLE CEILING – MTD CL UP SAME AS ASSOCIATED RECEPTACLE. SUBSCRIPTS AS NOTED ABOVE.
- PROVISIONS FOR SCADA SYSTEM OUTLET. TWO-GANG WALL BOX WITH ONE 1"C STUB TO ABOVE ACCESSIBLE CEILING – MTD CL UP SAME AS ASSOCIATED RECEPTACLE
- CEILING MOUNTED TELEPHONE SYSTEM OUTLET
- CEILING MOUNTED DATA SYSTEM OUTLET
- CEILING MOUNTED VOICE & DATA OUTLET
- FLUSH TELEPHONE FLOOR OUTLET
- FLUSH DATA FLOOR OUTLET
- FLUSH VOICE & DATA FLOOR OUTLET
- TV — TELEVISION COAXIAL OUTLET. MOUNTED UP SAME AS ASSOCIATED RECEPTACLE

SECURITY

- SEC — SECURITY PANEL
- DS — DOOR INTRUSION SWITCH
- DE — ELECTRIC DOOR STRIKE
- CR — CARD READER
- KP — KEY PAD
- MOTION DETECTOR
- CAM — SECURITY CAMERA PTZ = PAN/TILT/ZOOM

INTERCOM & PAGING SYSTEM

- S — CEILING MOUNTED SPEAKER
- PA — PAGING SYSTEM CONTROL PANEL
- HS — PAGING SYSTEM HANDSET

INSTRUMENTATION

- LS / XX — FIELD MOUNTED INSTRUMENT; INSTRUMENT IDENTIFICATION TYPE; INSTRUMENT LOOP #
- FS / XX — VENDER SUPPLIED INSTRUMENT

INSTRUMENT IDENTIFIER:

AE	ANALYSIS ELEMENT
AIT	ANALYSIS INDICATING TRANSMITTER
AT	ANALYSIS TRANSMITTER
DPS	DIFFERENTIAL PRESSURE SWITCH
FCV	FLOW CONTROL VALVE
FE	FLOW ELEMENT
FIT	FLOW INDICATING TRANSMITTER
FT	FLOW TRANSMITTER
FS	FLOW SWITCH
LE	LEVEL ELEMENT
LIT	LEVEL INDICATING TRANSMITTER
LT	LEVEL TRANSMITTER
LS	LEVEL SWITCH
LSH	LEVEL SWITCH HIGH
LSL	LEVEL SWITCH LOW
MOV	MOTOR OPERATED VALVE
PE	PRESSURE ELEMENT
PIT	PRESSURE INDICATING TRANSMITTER
PT	PRESSURE TRANSMITTER
PS	PRESSURE SWITCH
SV	SOLENOID VALVE
TE	TEMPERATURE ELEMENT
TIT	TEMPERATURE INDICATING TRANSMITTER
TT	TEMPERATURE TRANSMITTER
ZS	PROXIMITY SWITCH

MISC TERMINALS

- ARROW, SMALL
- ARROW, LARGE
- ARROW, TRIANGULAR
- CONTINUE, SMALL
- CONTINUE, LARGE
- DOT, SMALL
- DOT, MEDIUM
- DOT, LARGE
- POLARITY SQUARE
- SCREW TERMINAL
- TERMINAL POINT, SMALL
- TERMINAL POINT, LARGE
- TERMINAL POINT, SQUARE
- SHIELD
- SHIELD W/TERMINAL POINT

ONE-LINE DIAGRAM SYMBOLS

- 52 / CB / GCB1 / 800A / E.O / 52 — HV VOLTAGE DRAWOUT TYPE POWER CIRCUIT BREAKER ELECTRICALLY OPERATED
- MV VOLTAGE DRAWOUT TYPE POWER CIRCUIT BREAKER WITH MANUAL CONTROL SWITCH
- AT / AF / EO — LOW VOLTAGE CIRCUIT BREAKER
  AF – AMP FRAME
  AT – AMP TRIP
  EO – ELECTRICALLY OPERATED
- ST — ST – SHUNT TRIP; GF – GROUND FAULT; EO – ELECTRICALLY OPERATED
- DISCONNECT, ISOLATION OR SAFETY SWITCH
- FUSED DISCONNECT SWITCH
- 1 — MAGNETIC MOTOR STARTER. NUMERAL INDICATES NEMA SIZE FVNR UNLESS OTHERWISE NOTED.
  FVR – FULL VOLTAGE REVERSING
  RVAT – REDUCING VOLTAGE AUTO TRANSFORMER
  2S – TWO SPEED
  YD – WYE DELTA REDUCED VOLTAGE STARTER
- CAPACITOR
- VFD 11 — VFD = VARIABLE FREQUENCY DRIVE
  SS = SOLID STATE STARTER
  DC = DC VARIABLE DRIVE
  NUMERAL INDICATES AMP RATING
- OA — POWER TRANSFORMER
  OA – LIQUID TYPE SELF COOLED
  AA – DRY TYPE SELF COOLED
  FA – FAN COOLED
  CONNECTION
- 2 / 480/120 — POTENTIAL TRANSFORMER
  RATIO
  NUMBER REQUIRED
- 2 / 600/5 — CURRENT TRANSFORMER
  RATIO
  PHASE
- 5 — MOTOR, NUMERAL INDICATES HORSEPOWER
- X — GENERAL LOAD, NUMERAL INDICATES LOAD IN KVA
- GENERATOR
- N E O L ATS — ATS – AUTOMATIC TRANSFER SWITCH
  MTS – MANUAL TRANSFER SWITCH
- A — METER
  A – AMMETER
  V – VOLTMETER
  W – WATTMETER
  KWH – KILOWATT HOUR
  KVAR – KILOVAR METER
  VAR – VAR METER
  HZ – FREQUENCY METER
  PF – POWER FACTOR METER
- 3 — LINE OR LOAD REACTOR
  NUMERAL INDICATES %
  IMPENDENCE
- DPM — DIGITAL POWER MONITOR
- AS — METER TRANSFER SWITCH
  AS – AMMETER SWITCH
  VS – VOLTMETER SWITCH
- SPD — SPD = SURGE PROTECTION DEVICE
  ENDN = ETHERNET TO DEVICENET LINKING DEVICE
  DPS = DEVICENET POWER SUPPLY
- MEDIUM VOLTAGE CABLE TERMINATION
- DRAWOUT DEVICE
- LA — LIGHTNING ARRESTOR
- K — KEY INTERLOCK

GROUNDING

- G — BARE COPPER GROUND CABLE. (SIZE 4/0 UNLESS OTHERWISE NOTED)
- 3/4ø X 10'-0" LONG GROUND ROD. (10'-0" MINIMUM LENGTH)
- CABLE TO CABLE CADWELD EXOTHERMIC CONNECTION OR APPROVED EQUAL.
- CADWELD EXOTHERMIC CABLE CONNECTION TO BOLT CONNECTION
- GROUND TERMINAL CONNECTION ON EQUIPMENT
- GROUND

CONTROL DIAGRAM SYMBOLS

NOTE: ALL CONTROL SYMBOLS ARE DRAWN ASSUMING DE-ENERGIZED CIRCUITS, EMPTY TANKS, UNPRESSURIZED LINES, ETC.

- OPEN ON INCREASE / CLOSE ON INCREASE — PRESSURE SWITCH
- LEVEL SWITCH
- FLOW SWITCH
- TEMPERATURE SWITCH
- NORMALLY CLOSED / NORMALLY OPEN — PUSH BUTTON
- INSTANTANEOUS CONTACT
- TIMED CLOSE CONTACT
- TIMED OPEN CONTACT
- LIMIT SWITCH
- H O A / XOO / OOX — SELECTOR SWITCH: QUANTITY OF ARROWS INDICATES NUMBER OF POSITIONS. XOO INDICATES UPPER CONTACT CLOSED IN LEFT POSITION AND OPEN IN CENTER AND RIGHT POSITIONS
- INTERNAL WIRING
- FIELD WIRING
- RELAY COIL

ABBREVIATIONS

A,AMP	AMPERES
AC	ALTERNATING CURRENT
AFF	ABOVE FINISHED FLOOR
AFG	ABOVE FINISHED GRADE
AHJ	AUTHORITY HAVING JURISDICTION
AIC	AMPERE INTERRUPT CAPACITY
AWG	AMERICAN WIRE GAUGE
BFG	BELOW FINISHED GRADE
CATV	CABLE TELEVISION
CB	CIRCUIT BREAKER
CCTV	CLOSED CIRCUIT TELEVISION
CL	CENTER LINE
CKT	CIRCUIT
CP	CONTROL PANEL
CPT	CONTROL POWER TRANSFORMER
CT	CURRENT TRANSFORMER
CU	COPPER
E.C.	ELECTRICAL CONTRACTOR
EMT	ELECTRIC METALLIC TUBING
FAA	FIRE ALARM ANNUNCIATOR
FACP	FIRE ALARM CONTROL PANEL
FBO	FURNISHED BY OTHERS
FWE	FURNISHED WITH EQUIPMENT
G.C.	GENERAL CONTRACTOR
GEN	GENERATOR
GFCI	GROUND FAULT CIRCUIT INTERRUPTER
G,GND	GROUND
HP	HORSEPOWER
HZ	FREQUENCY IN CYCLES/SECOND
IG	ISOLATED GROUND
IMT	INTERMEDIATE METALLIC CONDUIT
JBOX	JUNCTION BOX
K	KILO
KCMIL	1000 CIRCULAR MILS
KVA	KILOVOLT AMPERE
KVAR	KILOVOLT AMPERE REACTIVE
KW	KILOWATT
KWH	KILOWATT HOUR
MCC	MOTOR CONTROL CENTER
MCB	MAIN CIRCUIT BREAKER
MFG	MANUFACTURER
MH	MANHOLE
MLO	MAIN LUGS ONLY
MTD	MOUNTED
MTR	MOTOR
MV	MEDIUM VOLTAGE
NC	NORMALLY CLOSED
NEC	NATIONAL ELECTRIC CODE
NEUT	NEUTRAL
NO	NORMALLY OPEN
OL	OVERLOAD ELEMENT
PF	POWER FACTOR
PH	PHASE
PRI	PRIMARY
PT	POTENTIAL TRANSFORMER
PVC	POLYVINYL CHLORIDE
RGS	RIGID STEEL CONDUIT
RTD	RESISTANCE TEMPERATURE DETECTOR
SEC	SECONDARY
SS	STAINLESS STEEL
SV	SOLENOID VALVE
TEMP	TEMPERATURE
TVSS	TRANSIENT VOLTAGE SURGE SUPPRESSOR
TYP	TYPICAL
UE	UNDERGROUND ELECTRIC
UG	UNDERGROUND
UPS	UNINTERRUPTED POWER SUPPLY
V	VOLTS
VA	VOLT-AMPERES
VAR	VOLT-AMPERE REACTIVE
W	WATT
WM	WATT METER
WP	WEATHER PROOF
XFMR	TRANSFORMER
XP	EXPLOSION PROOF

ISSUED FOR BID

WOODARD & CURRAN
980 Washington Street, Suite 325
Dedham, Massachusetts 02026
800.446.5518 | www.woodardcurran.com
COMMITMENT & INTEGRITY DRIVE RESULTS

THIS DOCUMENT IS THE PROPERTY OF WOODARD & CURRAN INC., AND ITS CLIENT. REPRODUCTION OR MODIFICATION, WITHOUT WRITTEN PERMISSION IS PROHIBITED.

COMMONWEALTH OF MASSACHUSETTS — ANDREW FITZPATRICK — ELECTRICAL — NO. 50761 — REGISTERED PROFESSIONAL ENGINEER — 2016-04-12

REV	DESCRIPTION	DATE

DESIGNED BY: GW | CHECKED BY: AJF
DRAWN BY: PQ | 229256 E-01.dwg

ELECTRICAL LEGEND

CITY OF QUINCY, MASSACHUSETTS
DEPARTMENT OF PLANNING AND COMMUNITY DEVELOPMENT
34 CODDINGTON STREET

ROSS GARAGE DEMOLITION AND TEMPORARY SURFACE RESTORATION PHASE 1

JOB NO.:229256.00
DATE: APRIL 2016
SCALE: AS NOTED
SHEET: 12 OF 15

E-01

\\wc\shared\Projects\229256 Quincy MA - Ross Garage Demolition\wip\Ross Garage Demolition\Drawings\Current\Electrical\229256 E-01.dwg, Apr 05, 2016 - 4:08pm

24x36 SHEET
1:1

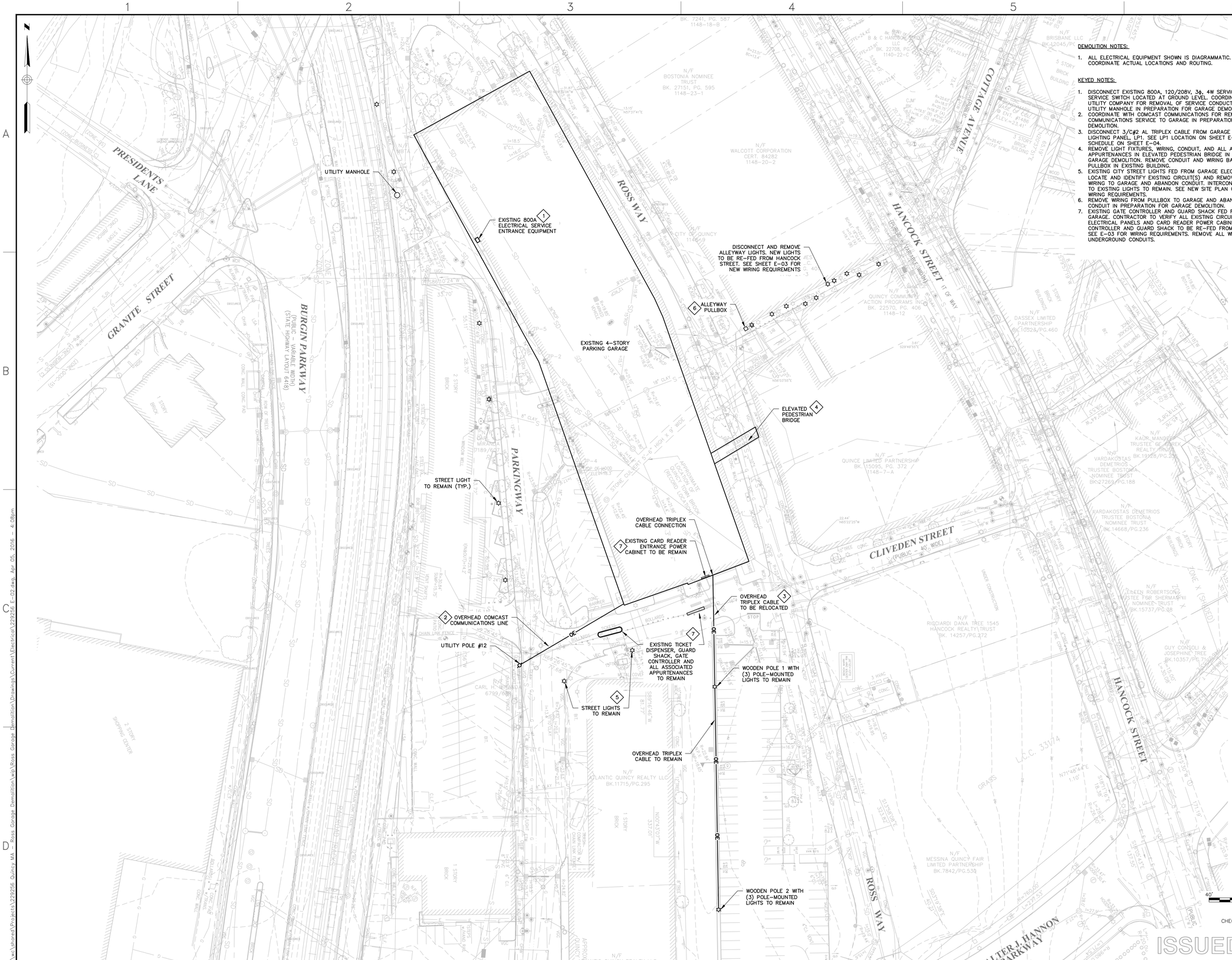

DEMOLITION NOTES:

1. ALL ELECTRICAL EQUIPMENT SHOWN IS DIAGRAMMATIC. FIELD-VERIFY AND COORDINATE ACTUAL LOCATIONS AND ROUTING.

KEYED NOTES:

1. DISCONNECT EXISTING 800A, 120/208V, 3ϕ, 4W SERVICE FROM MAIN SERVICE SWITCH LOCATED AT GROUND LEVEL. COORDINATE WITH LOCAL UTILITY COMPANY FOR REMOVAL OF SERVICE CONDUCTORS BACK TO UTILITY MANHOLE IN PREPARATION FOR GARAGE DEMOLITION.
2. COORDINATE WITH COMCAST COMMUNICATIONS FOR REMOVAL OF COMMUNICATIONS SERVICE TO GARAGE IN PREPARATION FOR GARAGE DEMOLITION.
3. DISCONNECT 3/C#2 AL TRIPLEX CABLE FROM GARAGE AND ROUTE TO NEW LIGHTING PANEL, LP1. SEE LP1 LOCATION ON SHEET E-03 AND PANEL SCHEDULE ON SHEET E-04.
4. REMOVE LIGHT FIXTURES, WIRING, CONDUIT, AND ALL ASSOCIATED APPURTENANCES IN ELEVATED PEDESTRIAN BRIDGE IN PREPARATION FOR GARAGE DEMOLITION. REMOVE CONDUIT AND WIRING BACK TO NEAREST PULLBOX IN EXISTING BUILDING.
5. EXISTING CITY STREET LIGHTS FED FROM GARAGE ELECTRICAL PANEL. LOCATE AND IDENTIFY EXISTING CIRCUIT(S) AND REMOVE UNDERGROUND WIRING TO GARAGE AND ABANDON CONDUIT. INTERCONNECTION OF WIRING TO EXISTING LIGHTS TO REMAIN. SEE NEW SITE PLAN ON SHEET E-02 FOR WIRING REQUIREMENTS.
6. REMOVE WIRING FROM PULLBOX TO GARAGE AND ABANDON UNDERGROUND CONDUIT IN PREPARATION FOR GARAGE DEMOLITION.
7. EXISTING GATE CONTROLLER AND GUARD SHACK FED FROM EXISTING GARAGE. CONTRACTOR TO VERIFY ALL EXISTING CIRCUITS FED FROM ELECTRICAL PANELS AND CARD READER POWER CABINET. GATE CONTROLLER AND GUARD SHACK TO BE RE-FED FROM NEW PANEL LP1. SEE E-03 FOR WIRING REQUIREMENTS. REMOVE ALL WIRING AND ABANDON UNDERGROUND CONDUITS.

980 Washington Street, Suite 325
Dedham, Massachusetts 02026
800.446.5518 | www.woodardcurran.com
COMMITMENT & INTEGRITY DRIVE RESULTS
WOODARD & CURRAN

THIS DOCUMENT IS THE PROPERTY OF WOODARD & CURRAN INC., AND ITS CLIENT. REPRODUCTION OR MODIFICATION, WITHOUT WRITTEN PERMISSION IS PROHIBITED.

COMMONWEALTH OF MASSACHUSETTS
ANDREW FITZPATRICK
ELECTRICAL
NO. 5076
REGISTERED PROFESSIONAL ENGINEER
2016-04-25

REV.	DESCRIPTION	DATE

DESIGNED BY: GW
DRAWN BY: PQ
CHECKED BY: AJF
229256 E-02.dwg

ROSS GARAGE ELECTRICAL SITE DEMOLITION PLAN

CITY OF QUINCY, MASSACHUSETTS
DEPARTMENT OF PLANNING AND COMMUNITY DEVELOPMENT
34 CODDINGTON STREET

ROSS GARAGE DEMOLITION AND TEMPORARY SURFACE RESTORATION PHASE 1

JOB NO.: 229256.00
DATE: APRIL 2016
SCALE: AS NOTED
SHEET: 13 OF 15

E-02

\\wc\shared\Projects\229256 Quincy MA - Ross Garage Demolition\wip\Ross Garage Demolition\Drawings\Current\Electrical\229256 E-02.dwg, Apr 05, 2016 - 4:08pm

24x36 SHEET
1:1

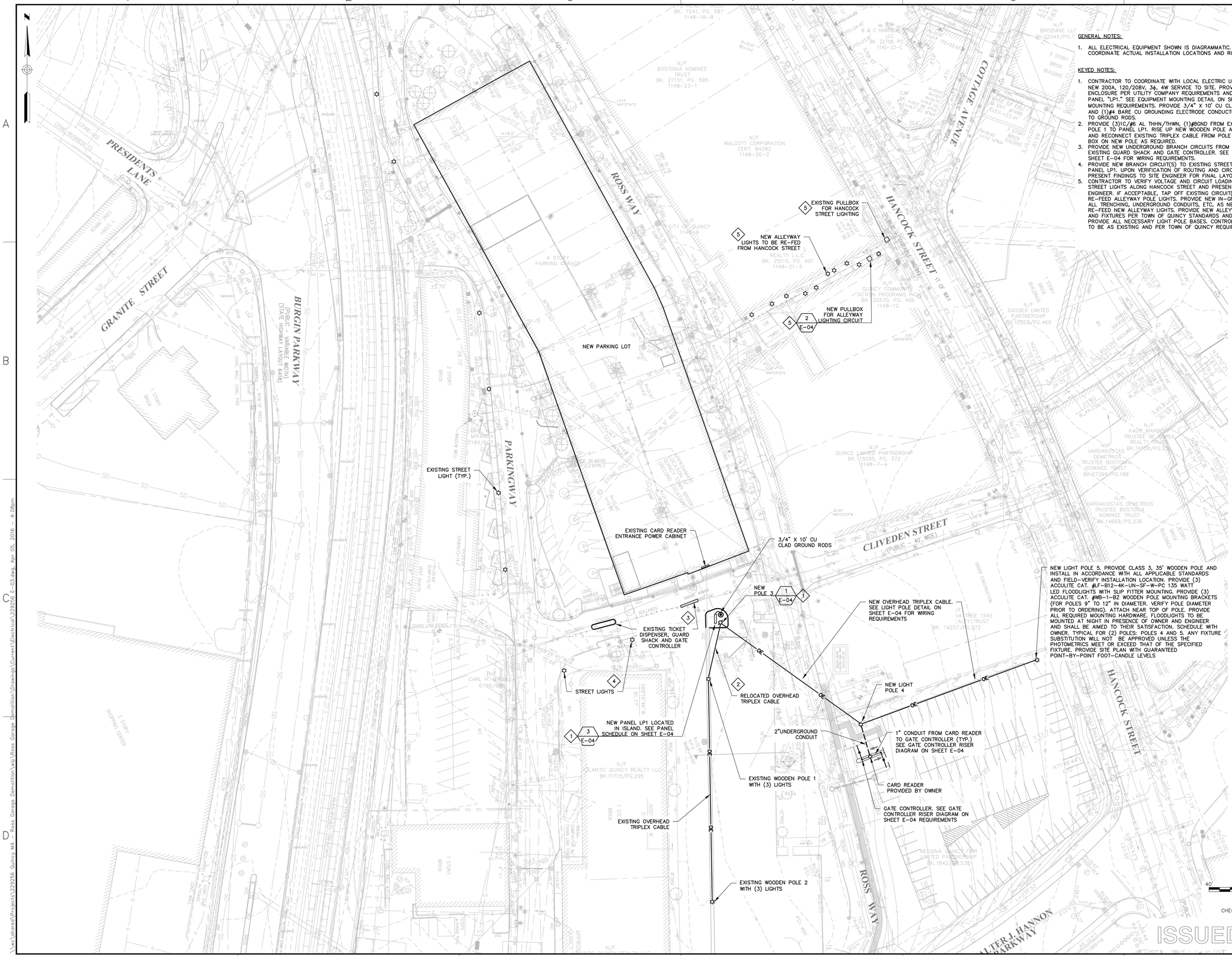

GENERAL NOTES:

1. ALL ELECTRICAL EQUIPMENT SHOWN IS DIAGRAMMATIC. FIELD-VERIFY AND COORDINATE ACTUAL INSTALLATION LOCATIONS AND ROUTING.

KEYED NOTES:

1. CONTRACTOR TO COORDINATE WITH LOCAL ELECTRIC UTILITY COMPANY FOR NEW 200A, 120/208V, 3ϕ, 4W SERVICE TO SITE. PROVIDE METER ENCLOSURE PER UTILITY COMPANY REQUIREMENTS AND MAIN SERVICE PANEL "LP1." SEE EQUIPMENT MOUNTING DETAIL ON SHEET E-04 FOR MOUNTING REQUIREMENTS. PROVIDE 3/4" X 10' CU CLAD GROUND RODS AND (1)#4 BARE CU GROUNDING ELECTRODE CONDUCTOR FROM PANEL LP1 TO GROUND RODS.
2. PROVIDE (3)1C/#6 AL THHN/THWN, (1)#8GND FROM EXISTING WOODEN POLE 1 TO PANEL LP1. RISE UP NEW WOODEN POLE ADJACENT TO LP1 AND RECONNECT EXISTING TRIPLEX CABLE FROM POLE P1 TO 8" JUNCTION BOX ON NEW POLE AS REQUIRED.
3. PROVIDE NEW UNDERGROUND BRANCH CIRCUITS FROM PANEL LP1 TO EXISTING GUARD SHACK AND GATE CONTROLLER. SEE PANEL SCHEDULE ON SHEET E-04 FOR WIRING REQUIREMENTS.
4. PROVIDE NEW BRANCH CIRCUIT(S) TO EXISTING STREET LIGHTS FROM PANEL LP1. UPON VERIFICATION OF ROUTING AND CIRCUIT IDENTIFICATION, PRESENT FINDINGS TO SITE ENGINEER FOR FINAL LAYOUT OF WORK.
5. CONTRACTOR TO VERIFY VOLTAGE AND CIRCUIT LOADING OF EXISTING STREET LIGHTS ALONG HANCOCK STREET AND PRESENT FINDINGS TO SITE ENGINEER. IF ACCEPTABLE, TAP OFF EXISTING CIRCUIT(S) IN PULLBOX AND RE-FEED ALLEYWAY POLE LIGHTS. PROVIDE NEW IN-GROUND PULLBOX AND ALL TRENCHING, UNDERGROUND CONDUITS, ETC. AS NECESSARY TO RE-FEED NEW ALLEYWAY LIGHTS. PROVIDE NEW ALLEYWAY LIGHT POLES AND FIXTURES PER TOWN OF QUINCY STANDARDS AND REQUIREMENTS. PROVIDE ALL NECESSARY LIGHT POLE BASES. CONTROL OF NEW FIXTURES TO BE AS EXISTING AND PER TOWN OF QUINCY REQUIREMENTS.

980 Washington Street, Suite 325
Dedham, Massachusetts 02026
800.446.5518 | www.woodardcurran.com
COMMITMENT & INTEGRITY DRIVE RESULTS
WOODARD & CURRAN

THIS DOCUMENT IS THE PROPERTY OF WOODARD & CURRAN INC., AND ITS CLIENT. REPRODUCTION OR MODIFICATION, WITHOUT WRITTEN PERMISSION IS PROHIBITED.

COMMONWEALTH OF MASSACHUSETTS
ANDREW FITZPATRICK GIOSTRI
NO. 50761
REGISTERED PROFESSIONAL ENGINEER
2016-04-05

REV.	DESCRIPTION	DATE

DESIGNED BY: GW
DRAWN BY: PQ
CHECKED BY: AJF
229256 E-03.dwg

ROSS GARAGE
ELECTRICAL SITE PLAN

CITY OF QUINCY, MASSACHUSETTS
DEPARTMENT OF PLANNING AND COMMUNITY DEVELOPMENT
34 CODDINGTON STREET

ROSS GARAGE DEMOLITION AND TEMPORARY SURFACE RESTORATION PHASE 1

JOB NO.:229256.00
DATE: APRIL 2016
SCALE: AS NOTED
SHEET: 14 OF 15

E-03

\\wc\shared\Projects\229256 Quincy MA - Ross Garage Demolition\wip\Ross Garage Demolition\Drawings\Current\Electrical\229256 E-03.dwg, Apr 05, 2016 - 4:08pm

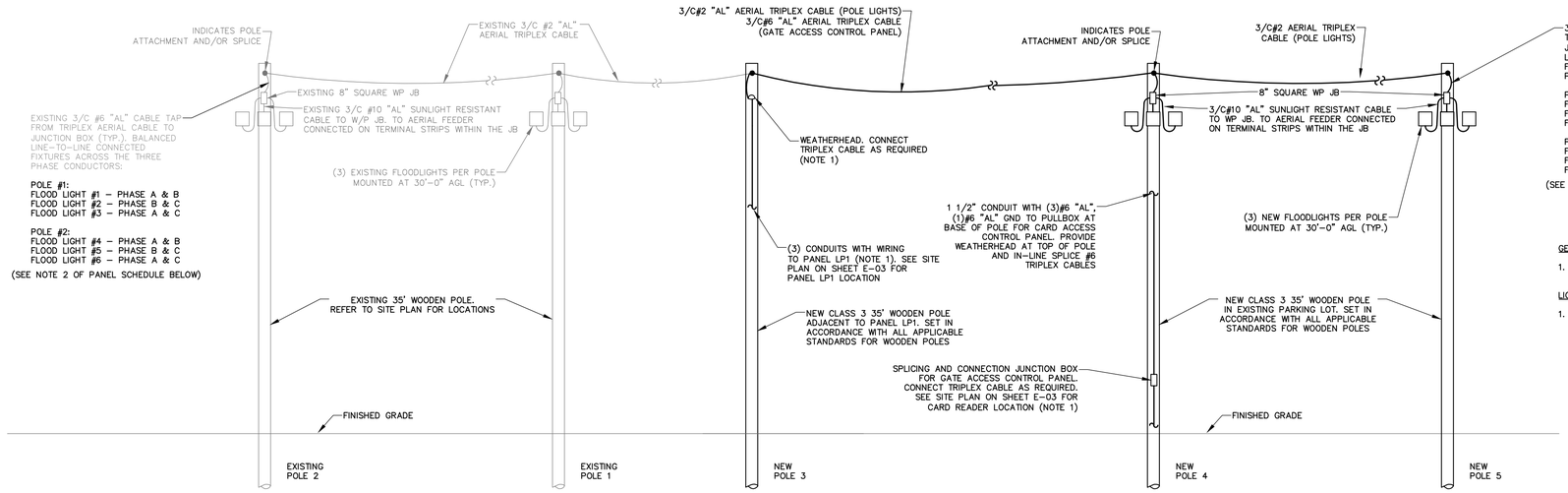

GENERAL NOTES:

1. EXISTING EQUIPMENT IS SHOWN IN LIGHT DESIGNATION. NEW EQUIPMENT IS SHOWN IN BOLD DESIGNATION.

LIGHT POLE CONNECTION NOTES:

1. PROVIDE IN-LINE ALUMINUM OVERHEAD SPLICES FOR CONNECTION OF TRIPLEX CABLES TO THE (3) BRANCH CIRCUIT CONDUCTORS FROM PANEL LP1. EACH BRANCH CIRCUIT SHALL HAVE (3)#6 "AL", (1)#6 "AL" GND IN 1 1/2" CONDUIT DOWN POLE TO PANEL LP1.

1 / E-03 LIGHT POLES 1–5 CONNECTION DETAIL

SCALE: N.T.S.

DIRECTORY	BRKR	POLE	CKT #	KVA	KVA LOADS A	KVA LOADS B	KVA LOADS C	KVA	CKT #	POLE	BRKR	DIRECTORY
EXISTING POLE 1 & POLE 2 LIGHTS (SEE NOTE 2)	20	3	1	1.15	1.65			0.50	2	1	20	EXISTING GATE CONTROLLER (SEE NOTE 1)
			3	1.15		1.15			4	2	20	EXISTING GUARD SHACK
			5	1.15			1.15		6			
POLE 4 & POLE 5 LIGHTS (SEE NOTE 3)	20	3	7	0.60	0.60				8	1	20	EXISTING STREET LIGHTS
			9	0.60		0.60			10	1	20	EXISTING STREET LIGHTS
			11	0.60			1.20	0.60	12	1	20	GATE ACCESS CONTROL PANEL
SPARE	20	1	13		0.00				14	1	20	SPARE
SPACE			15			0.00			16			SPACE
SPACE			17				0.00		18			SPACE
				SUBTOTAL	2.25	1.75	2.35	SUBTOTAL				
VOLTAGE:	120/208		TOTAL kVA		6.35					PANEL NAME:		LP1
MAIN BREAKER:	200		TOTAL AMPS		18					LOCATION:		PARKING LOT ISLAND
BUSES:	200									MOUNTING:		SURFACE
PH & WIRES:	3PH 4W									AIC RATING:		22 KAIC

NOTES: EXISTING LOADS SHOWN IN LIGHT DESIGNATION. NEW LOADS SHOWN IN BOLD DESIGNATION.

PANEL SCHEDULE "PANEL LP1"

PANEL SCHEDULE NOTES:

1. VERIFY FINAL CIRCUIT BREAKER REQUIREMENTS OF THE GATE CONTROLLER, GUARD SHACK AND STREET LIGHTS PER IDENTIFICATION OF EXISTING CIRCUITS.
2. VERIFY EXISTING POLE LIGHTING 3-PHASE CIRCUIT IS BALANCED PER THE PHASE CONNECTION WIRING INDICATED IN THE LIGHT POLE CONNECTION DETAIL. MEASURE AMPERAGE READINGS OF EACH PHASE AT PANEL LP1.

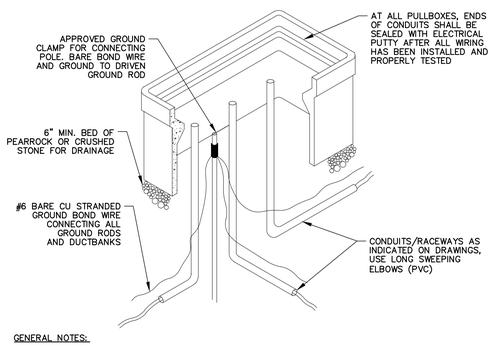

GENERAL NOTES:

1. FINAL DIMENSIONS OF PULL BOXES SHALL BE AS VERIFIED IN THE FIELD AND SHALL BE IN ACCORDANCE WITH NEC.
2. THE PULL/SPLICE BOX UNDERGROUND ENCLOSURES SHALL BE CONSTRUCTED OF POLYMER CONCRETE CONSISTING OF SAND AND AGGREGATE BOUND TOGETHER WITH A POLYMER RESIN. INTERNAL REINFORCEMENT MAY BE PROVIDED BY MEANS OF STEEL, FIBERGLASS, OR A COMBINATION OF THE TWO. HANDHOLES FOR INSTALLATION IN ROADWAYS SHALL CONCRETE REINFORCED H20 TRAFFIC RATED.
3. PULLBOXES SHALL BE PRECAST EQUAL TO: STRONGWELL QUAZITE, OLD CASTLE PRECAST, COLONIAL TEL TEK OR APPROVED EQUAL.
4. COVERS SHALL HAVE MOLDED LETTERING, ELECTRIC OR COMM AS APPLICABLE.

2 / E-03 PULLBOX DETAIL

SCALE: N.T.S.

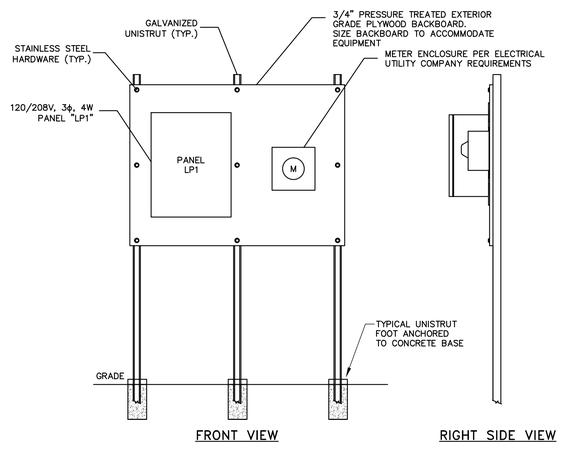

3 / E-03 EQUIPMENT MOUNTING DETAIL

SCALE: N.T.S.

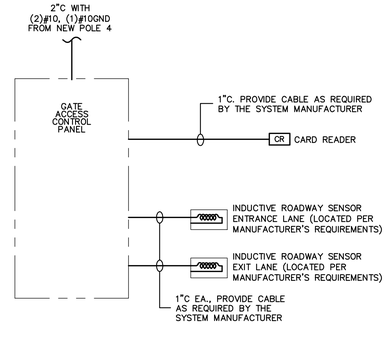

TYPICAL GATE CONTROLLER RISER DIAGRAM

ISSUED FOR BID

WOODARD & CURRAN
980 Washington Street, Suite 325
Dedham, Massachusetts 02026
800.446.3518 | www.woodardcurran.com
COMMITMENT & INTEGRITY DRIVE RESULTS

THIS DOCUMENT IS THE PROPERTY OF WOODARD & CURRAN INC., AND ITS CLIENT. REPRODUCTION OR MODIFICATION, WITHOUT WRITTEN PERMISSION IS PROHIBITED.

COMMONWEALTH OF MASSACHUSETTS ANDREW FITZPATRICK No. 50761 REGISTERED PROFESSIONAL ENGINEER 2016-04-25

REV	DESCRIPTION	DATE

DESIGNED BY: PO
DRAWN BY: XXX
CHECKED BY: GW
229256 E-04.dwg

ELECTRICAL DETAILS

CITY OF QUINCY, MASSACHUSETTS
DEPARTMENT OF PLANNING AND COMMUNITY DEVELOPMENT
34 CODDINGTON STREET

ROSS GARAGE DEMOLITION AND TEMPORARY SURFACE RESTORATION PHASE 1

JOB NO.:229256.00
DATE: APRIL 2016
SCALE: AJF
SHEET: 15 OF 15

E-04

24x36 SHEET
1:1

\\wc\shared\Projects\229256 Quincy MA - Ross Garage Demolition\wip\Ross Garage Demolition\Drawings\Current\Electrical\229256 E-04.dwg, Apr 05, 2016 - 4:09pm