CLEVERLY ESTATES

60 CLEVERLY COURT
QUINCY, MASSACHUSETTS

FEBRUARY 26, 2016

IMAGE FROM 2016 GOOGLE MAPS

LOCUS AERIAL

NTS

GOOGLE MAPS

APPLICANT

JOSEPH TAYLOR
147 BEALE STREET
QUINCY, MA 02169

CIVIL/SURVEY

DECELLE-BURKE & ASSOCIATES
1266 FURNACE BROOK PARKWAY, SUITE 401
QUINCY, MA 02169

SHEETS

1 COVER SHEET
2 EXISTING CONDITIONS & CONSTRUCTION MANAGEMENT
3 GRADING PLAN & LAYOUT & UTILITIES
4 CONSTRUCTION DETAILS

COMMONWEALTH OF MASSACHUSETTS
CLAUDIO SALA
No. 38391
PROFESSIONAL LAND SURVEYOR

REVISIONS:

No.	DATE	
1	6/1/16	PEER REVIEW

COMMONWEALTH OF MASSACHUSETTS
No. 39418
REGISTERED PROFESSIONAL ENGINEER

DeCELLE BURKE & Associates, Inc.

JOB NUMBER: 200.017

LEGEND:

EXISTING:		PROPOSED:
	– LOCUS PROPERTY LINE	
	– SCRUB LINE	
D	– DRAIN MANHOLE	D
S	– SEWER MANHOLE	S
	– CATCH BASIN	
	– STONEWALL	
GV	– GAS VALVE	
WV	– WATER VALVE	WV
	– UTILITY POLE	
N/F	– NOW OR FORMERLY	
	– STONE BOUND	
	– IRON PIPE	
D	– DRAIN PIPE	D
W	– WATER MAIN	W
	– FIRE HYDRANT	
G	– GAS MAIN	
E	– UNDERGROUND POWER	
OHW	– OVERHEAD WIRES	
S	– SEWER PIPE	S
100	– CONTOUR	100
	– POST AND RAIL FENCE	
	– SPOT GRADE	100
	– CONIFEROUS TREE	
	– DECIDUOUS TREE	
	– HEDGE	
LSA	– LSA	LSA

SOIL LOGS

TEST PIT 1
GRD. EL. 20.4
GW. EL. NGWO

0"	Ap, SANDY LOAM 10YR3/3, FRIABLE
12"	Bw, SANDY LOAM 10YR4/4 FRIABLE
22"	C, SAND 2.5Y4/3 ICE CONTACT OUTWASH COARSE SAND AND GRAVEL WITH STONES NO SILT, SINGLE-GRAINED NGWO, NO MOTTLES
100"	

TEST PIT 2
GRD. EL. 20.9
GW. EL. NGWO

0"	FILL, LOAMY SAND
18"	OLD Ap, SANDY LOAM DENSE, 10YR3/3
21"	Bw, SANDY LOAM 10YR4/4 MIXED, UNDEFINED
26"	C, SAND 2.5Y4/3 ICE CONTACT OUTWASH COARSE SAND AND GRAVEL WITH MANY STONES, BONEY, SINGLE-GRAINED NGWO, NO MOTTLES
94"	

TEST PERFORMED BY JAMES BURKE, SOIL EVALUATOR
DATE OF TEST: 02/26/16

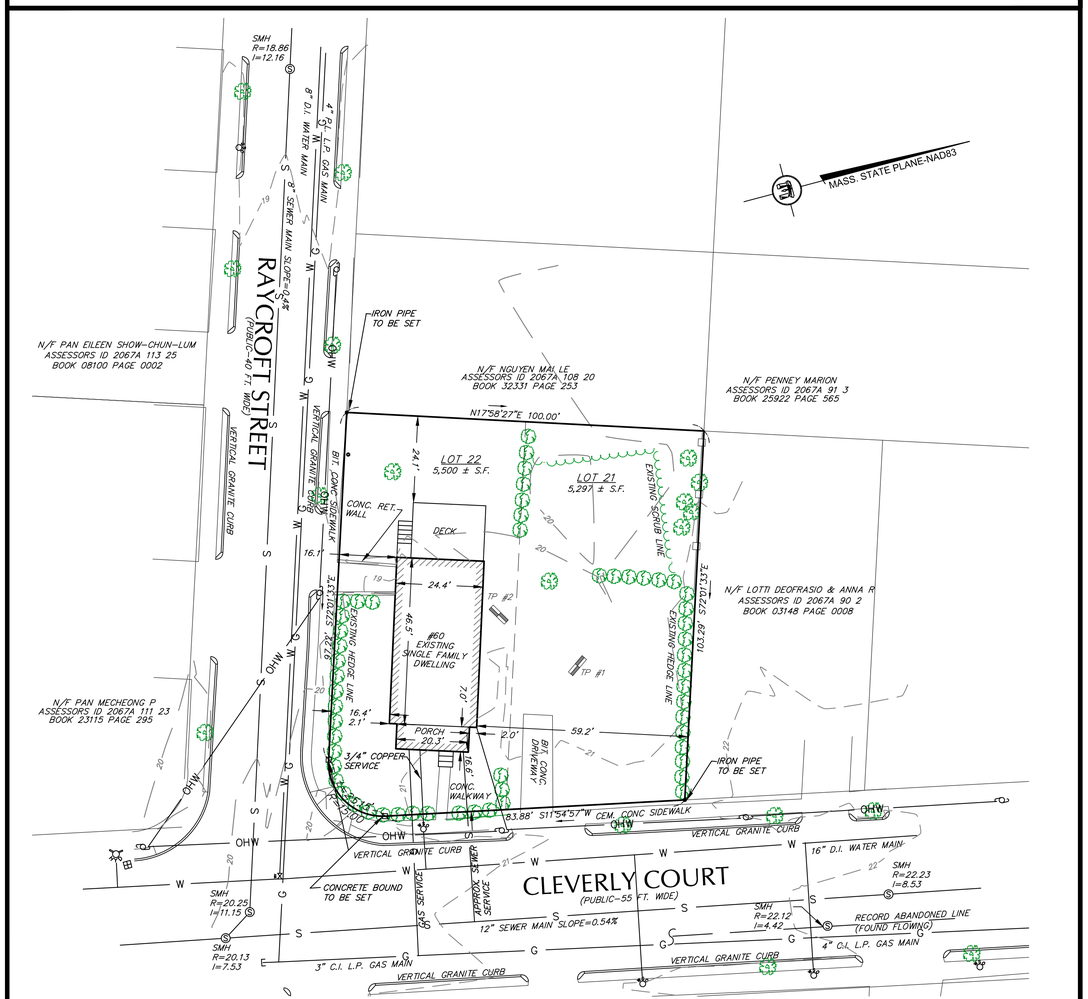

EXISTING CONDITIONS

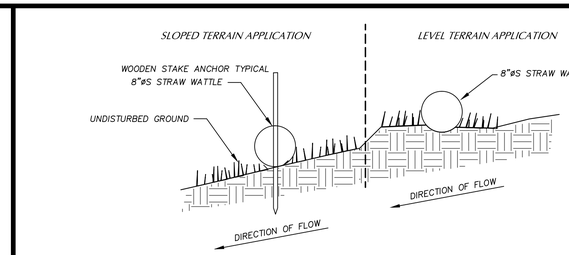

8" STRAW WATTLE

NOT TO SCALE

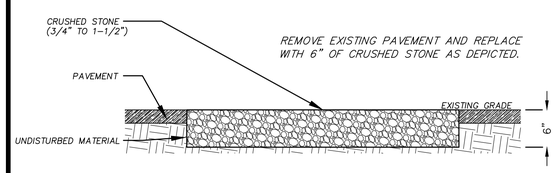

20'x40' CRUSHED STONE APRON

NOT TO SCALE

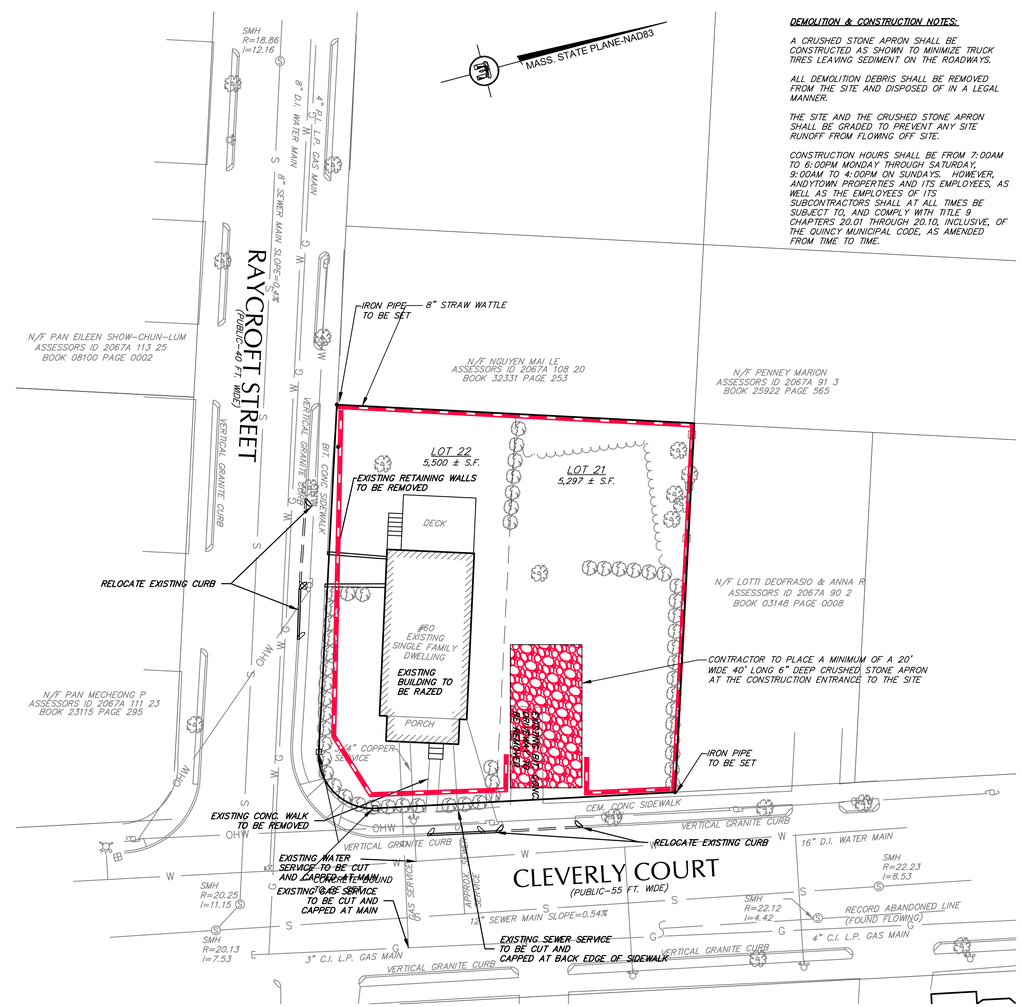

CONSTRUCTION MANAGEMENT

DEMOLITION & CONSTRUCTION NOTES:

A CRUSHED STONE APRON SHALL BE CONSTRUCTED AS SHOWN TO MINIMIZE TRUCK TIRES LEAVING SEDIMENT ON THE ROADWAYS.

ALL DEMOLITION DEBRIS SHALL BE REMOVED FROM THE SITE AND DISPOSED OF IN A LEGAL MANNER.

THE SITE AND THE CRUSHED STONE APRON SHALL BE GRADED TO PREVENT ANY SITE RUNOFF FROM FLOWING OFF SITE.

CONSTRUCTION HOURS SHALL BE FROM 7:00AM TO 6:00PM MONDAY THROUGH SATURDAY, 9:00AM TO 4:00PM ON SUNDAYS. HOWEVER, ANDYTOWN PROPERTIES AND ITS EMPLOYEES, AS WELL AS THE EMPLOYEES OF ITS SUBCONTRACTORS SHALL AT ALL TIMES BE SUBJECT TO, AND COMPLY WITH TITLE 9 CHAPTERS 20.01 THROUGH 20.10, INCLUSIVE, OF THE QUINCY MUNICIPAL CODE, AS AMENDED FROM TIME TO TIME.

DeCELLE
BURKE
& Associates, Inc.
1266 Furnace Brook Parkway, Suite 401 Quincy, MA 02169
(617) 405-5100 (O) (617) 405-5101 (F)

COMMONWEALTH OF MASSACHUSETTS
CLAUDIO SALA
No. 38391
PROFESSIONAL LAND SURVEYOR

CLAUDIO SALA, PLS DATE

GENERAL NOTES:

1. LOCUS: ASSESSORS MAP 2067A BLOCK 110 LOT 22

RECORD OWNER: GLEN T & JEAN M MUNN
DEED REFERENCE: BOOK 7647 PAGE 326
PLAN REFERENCE: BOOK 1729 PAGE 489

2. THIS PLAN IS THE RESULT OF AN ON THE GROUND SURVEY PERFORMED BY THIS OFFICE IN JANUARY 2016. ELEVATIONS SHOWN ON NAVD 88 DATUM.

3. EXISTING UTILITIES WHERE SHOWN IN THE DRAWINGS ARE FROM SURFACE OBSERVATION AND RECORD INFORMATION AND SHOULD BE CONSIDERED APPROXIMATE. THE CONTRACTOR SHALL BE RESPONSIBLE FOR PROPERLY LOCATING AND COORDINATING THE PROPOSED CONSTRUCTION ACTIVITY WITH DIG-SAFE AND THE APPLICABLE UTILITY COMPANIES AND MAINTAINING THE EXISTING UTILITY SYSTEM IN SERVICE.

DIG-SAFE SHALL BE NOTIFIED PER THE STATE OF MASSACHUSETTS STATUTE CHAPTER 82, SECTION 409 AT TEL. 1-888-344-7233. THE ENGINEER DOES NOT GUARANTEE THEIR ACCURACY OR THAT ALL UTILITIES AND SUBSURFACE STRUCTURES ARE SHOWN. LOCATIONS AND ELEVATIONS OF UNDERGROUND UTILITIES WERE TAKEN FROM RECORD PLANS. THE CONTRACTOR SHALL VERIFY SIZE, LOCATION, AND INVERTS OF UTILITIES AND STRUCTURES AS REQUIRED PRIOR TO THE START OF CONSTRUCTION.

4. THE LOT SHOWN DOES NOT LIE IN A SPECIAL FLOOD HAZARD ZONE AS DELINEATED ON FIRM 25021C-0226F DATED JUNE 9, 2014.

5. PARCEL IS ZONED RESB.

MIN. LOT AREA = 6,750 S.F.
MIN. FRONTAGE = 75 FT.
MIN. FRONT YARD = 25 FT.
MIN. SIDE YARD = 25 FT.
MIN. REAR YARD = 25 FT.
MAX. STORIES = 3

6. AN AS-BUILT PLAN SHALL BE SUBMITTED TO THE QUINCY ENGINEERING DEPARTMENT UPON COMPLETION OF THE PROJECT AND PRIOR TO OCCUPANCY.

PROJECT TITLE & LOCATION:

CLEVERLY ESTATES
60 CLEVERLY COURT
QUINCY MA, 02169

PLAN TITLE:
EXISTING CONDITIONS &
CONSTRUCTION MANAGEMENT

PREPARED FOR:

JOSEPH TAYLOR
147 BEALE STREET
QUINCY, MA 02169

DATE: FEBRUARY 26, 2016
REVISED: JUNE 1, 2016

JOB NUMBER: 200.017 | SHEET 2 OF 4

20 10 0 20 40
SCALE: 1"=20'

LEGEND:

EXISTING:		PROPOSED:
	– LOCUS PROPERTY LINE	
	– SCRUB LINE	
D	– DRAIN MANHOLE	D
S	– SEWER MANHOLE	S
	– CATCH BASIN	
	– STONEWALL	
GV	– GAS VALVE	
WV	– WATER VALVE	WV
	– UTILITY POLE	
N/F	– NOW OR FORMERLY	
	– STONE BOUND	
	– IRON PIPE	
D	– DRAIN PIPE	D
W	– WATER MAIN	W
	– FIRE HYDRANT	
G	– GAS MAIN	
E	– UNDERGROUND POWER	
OHW	– OVERHEAD WIRES	
S	– SEWER PIPE	S
100	– CONTOUR	100
	– POST AND RAIL FENCE	
	– SPOT GRADE	100
	– CONIFEROUS TREE	
	– DECIDUOUS TREE	
	– HEDGE	
LSA	– LSA	LSA

SEWER PROFILE

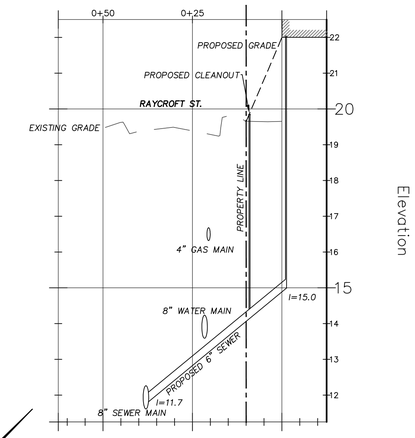

ZONING SCHEDULE

LOT ZONING CLASSIFICATION : RESIDENTIAL B (RESB)

ZONING REQUIREMENT		REQUIRED	PROPOSED	VARIANCE NEEDED?
MINIMUM LOT SIZE	–	6,750 FT.	10,792 S.F.	
MINIMUM FRONTAGE	–	75 FT.	83.89 FT.	
MINIMUM FRONT YARD SETBACK	–	25 FT.	8.5 FT.	VARIANCE REQUIRED
*MINIMUM SIDE YARD SETBACK	–	25 FT.	8.5 FT.	VARIANCE REQUIRED
MINIMUM REAR YARD SETBACK	–	25 FT.	N/A	
MAXIMUM NUMBER OF STORIES	–	3 STORIES	2.5 STORIES	
MAXIMUM F.A.R.	–	0.4	0.56	VARIANCE REQUIRED
MINIMUM GREEN SPACE	–	700 S.F. / UNIT	1,038 S.F. / UNIT	
MINIMUM LOT AREA PER UNIT	–	4,000 S.F. / UNIT	2,698 S.F. / UNIT	VARIANCE REQUIRED
MINIMUM NUMBER OF PARKING SPACES	–	1.75 SPACES / UNIT	2.25 SPACES / UNIT	

PLEASE NOTE THERE ARE TWO SIDE YARD VARIANCE REQUESTS FOR THE SAME DISTANCE OF 8.5 FEET

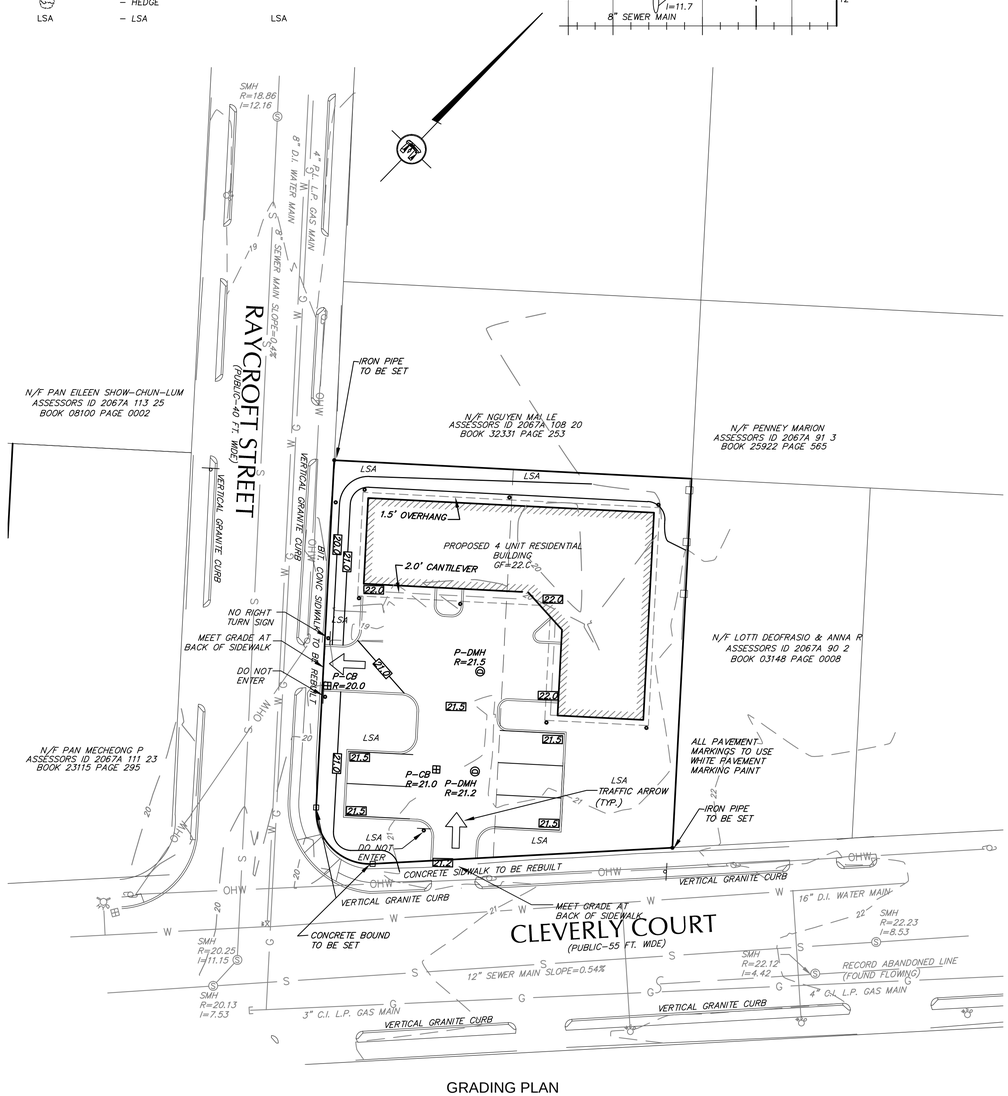

GRADING PLAN

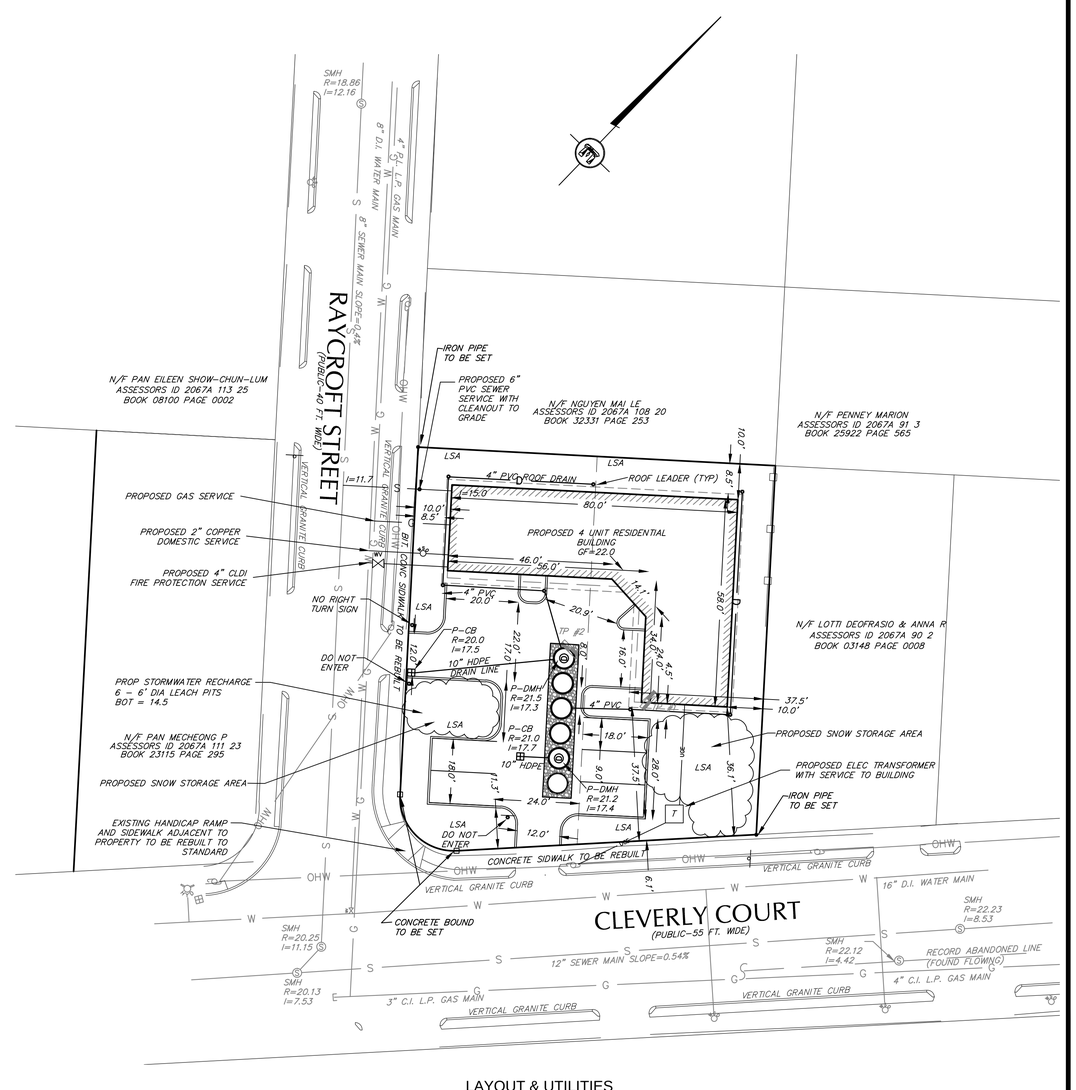

LAYOUT & UTILITIES

DeCELLE
BURKE
& Associates, Inc.
1266 Furnace Brook Parkway, Suite 401 Quincy, MA 02169
(617) 405-5100 (O) (617) 405-5101 (F)

COMMONWEALTH OF MASSACHUSETTS
JAMES W. BURKE
No. 39418
REGISTERED PROFESSIONAL ENGINEER

JAMES W. BURKE, P.E. DATE

GENERAL NOTES:

1. LOCUS: ASSESSORS MAP 2067A BLOCK 110 LOT 22

RECORD OWNER: GLEN T & JEAN M MUNN
DEED REFERENCE: BOOK 7647 PAGE 326
PLAN REFERENCE: BOOK 1729 PAGE 489

2. THIS PLAN IS THE RESULT OF AN ON THE GROUND SURVEY PERFORMED BY THIS OFFICE IN JANUARY 2016. ELEVATIONS SHOWN ON NAVD 88 DATUM.

3. EXISTING UTILITIES WHERE SHOWN IN THE DRAWINGS ARE FROM SURFACE OBSERVATION AND RECORD INFORMATION AND SHOULD BE CONSIDERED APPROXIMATE. THE CONTRACTOR SHALL BE RESPONSIBLE FOR PROPERLY LOCATING AND COORDINATING THE PROPOSED CONSTRUCTION ACTIVITY WITH DIG–SAFE AND THE APPLICABLE UTILITY COMPANIES AND MAINTAINING THE EXISTING UTILITY SYSTEM IN SERVICE.

DIG–SAFE SHALL BE NOTIFIED PER THE STATE OF MASSACHUSETTS STATUTE CHAPTER 82, SECTION 409 AT TEL. 1–888–344–7233. THE ENGINEER DOES NOT GUARANTEE THEIR ACCURACY OR THAT ALL UTILITIES AND SUBSURFACE STRUCTURES ARE SHOWN. LOCATIONS AND ELEVATIONS OF UNDERGROUND UTILITIES WERE TAKEN FROM RECORD PLANS. THE CONTRACTOR SHALL VERIFY SIZE, LOCATION, AND INVERTS OF UTILITIES AND STRUCTURES AS REQUIRED PRIOR TO THE START OF CONSTRUCTION.

4. THE LOT SHOWN DOES NOT LIE IN A SPECIAL FLOOD HAZARD ZONE AS DELINEATED ON FIRM 25021C–0226F DATED JUNE 9, 2014.

5. PARCEL IS ZONED RESB.

MIN. LOT AREA = 6,750 S.F.
MIN. FRONTAGE = 75 FT.
MIN. FRONT YARD = 25 FT.
MIN. SIDE YARD = 25 FT.
MIN. REAR YARD = 25 FT.
MAX. STORIES = 3

6. AN AS–BUILT PLAN SHALL BE SUBMITTED TO THE QUINCY ENGINEERING DEPARTMENT UPON COMPLETION OF THE PROJECT AND PRIOR TO OCCUPANCY.

COMMONWEALTH OF MASSACHUSETTS
CLAUDIO SALA
No. 38391
PROFESSIONAL LAND SURVEYOR

CLAUDIO SALA, PLS DATE

PROJECT TITLE & LOCATION:

CLEVERLY ESTATES
60 CLEVERLY COURT
QUINCY MA, 02169

PLAN TITLE:
GRADING PLAN &
LAYOUT & UTILITES

PREPARED FOR:

JOSEPH TAYLOR
147 BEALE STREET
QUINCY, MA 02169

DATE: FEBRUARY 26, 2016
REVISED: JUNE 1, 2016

JOB NUMBER: 200.017 | SHEET 3 OF 4

20 10 0 20 40
SCALE: 1"=20'

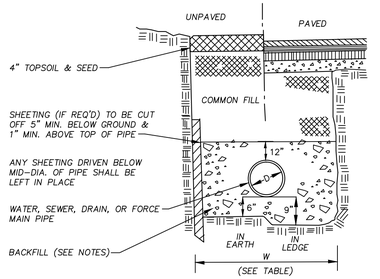

NOTES:

1. COMMON FILL MATERIAL TO CONSIST OF GRANULAR MATERIAL CONTAINING NO STONES LARGER THAN 6" IN GREATEST DIMENSION.

2. BACKFILL WITH CLEAN SAND TO 12" OVER PIPE FOR WATERMAINS.

3. BACKFILL WITH SELECT MATERIAL CONTAINING NO STONES LARGER THAN 3" IN GREATEST DIMENSION TO 12" OVER PIPE FOR SEWER AND DRAIN PIPES.

4. PROVIDE SCREENED GRAVEL BEDDING TO MID PIPE DIAMETER FOR SANITARY SEWERS AND WHERE GROUNDWATER IS ENCOUNTERED AS DIRECTED BY THE ENGINEER.

5. REMOVE UNSUITABLE MATERIAL BELOW GRADE IF ENCOUNTERED, TO SUITABLE DEPTHS AS DIRECTED BY ENGINEER AND REPLACE WITH CLEAN GRANULAR FILL.

TRENCH WIDTH		
D DIAMETER OF PIPE	W UNSHEETED	W SHEETED
TO 12"	3'	4'
14" TO 24"	4'	5'
30" TO 36"	5'	6'

NOTES:

1. ALL TRENCH CONSTRUCTION TO CONFORM TO APPLICABLE FEDERAL, STATE AND LOCAL REQULATIONS.

2. COMPACT FILL AND TAMP PIPE TO 93% MAX. DENSITY UNLESS OTHERWISE SPECIFIED.

3. MATERIALS TO BE USED ARE CL 52 DICL AND SDR 35 PVC

TYPICAL TRENCH SECTIONS

N.T.S.

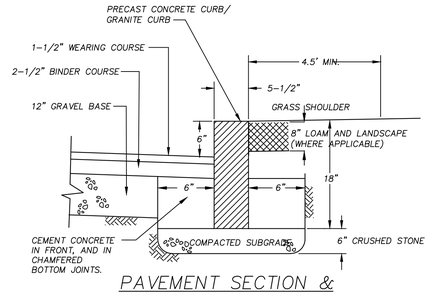

PAVEMENT SECTION & CONCRETE & GRANITE CURB DETAIL

N.T.S.

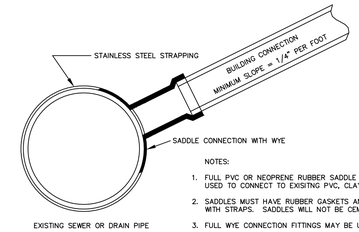

NOTES:

1. FULL PVC OR NEOPRENE RUBBER SADDLE MAY BE USED TO CONNECT TO EXISTING PVC, CLAY OR IRON PIPE.
2. SADDLES MUST HAVE RUBBER GASKETS AND SHALL BE TIGHTENED WITH STRAPS. SADDLES WILL NOT BE CEMENTED ONTO PIPE.
3. FULL WYE CONNECTION FITTINGS MAY BE USED.
4. PIPE SHALL BE CUT TO CONFORM TO THE OPENING IN THE SADDLE.
5. CONNECTIONS DIRECTLY INTO THE EXISTING PIPE WITHOUT A SADDLE OR A FULL WYE FITTING ARE NOT ALLOWED.

DRAIN AND SEWER SADDLE CONNECTION

N.T.S.

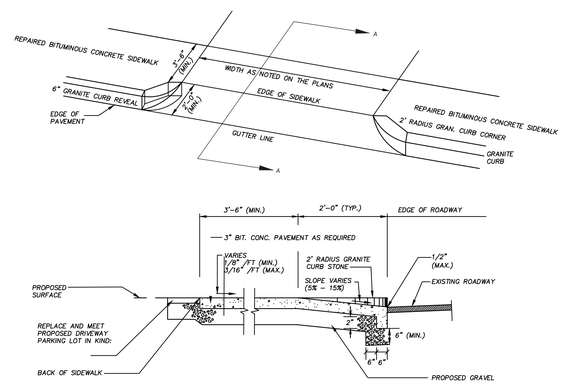

CURB CUT W/ CURB CORNER DETAIL

N.T.S.

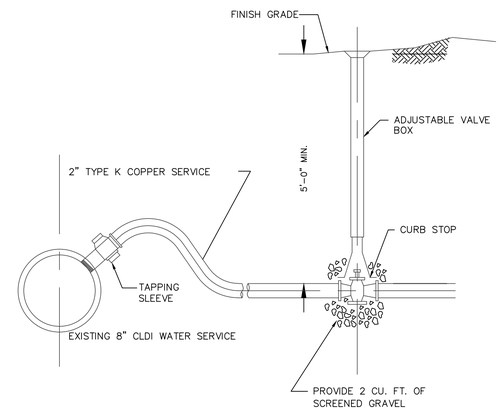

TAPPING SLEEVE & GATE VALVE FOR 2" COPPER DOMESTIC WATER SERVICE

N.T.S.

NOTES:
- CONCRETE THRUST BLOCK TO BE USED ONLY WHERE IT WILL BEAR ON UNDISTURBED EARTH.
- USE RESTRAINED JOINT FITTINGS (MEGALUG OR APPROVED EQUAL) WHERE CONCRETE THRUST BLOCK IS UNACCEPTABLE.
- SIZE OF BLOCK OR MEGALUG TO BE DESIGNED FOR SPECIFIC CONDITIONS.

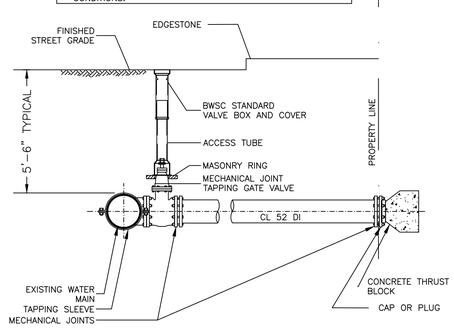

TAPPING SLEEVE & GATE VALVE FOR 4" FIRE SERVICE

N.T.S.

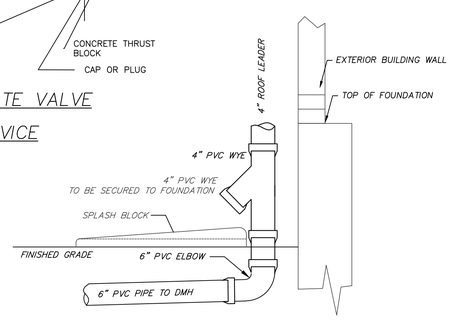

TYPICAL ROOF DRAIN W/ OVERFLOW

N.T.S.

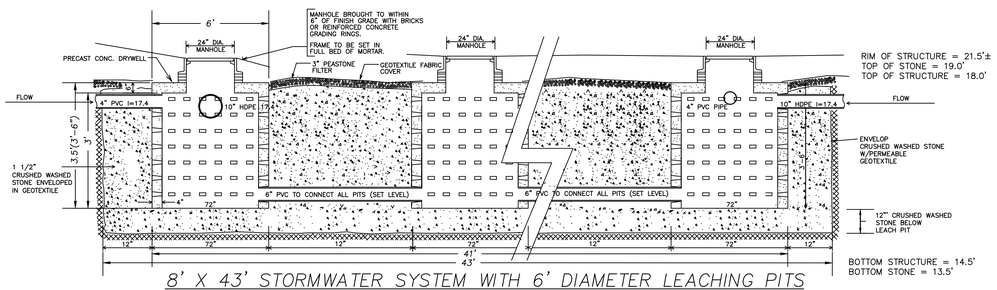

8' X 43' STORMWATER SYSTEM WITH 6' DIAMETER LEACHING PITS

N.T.S.

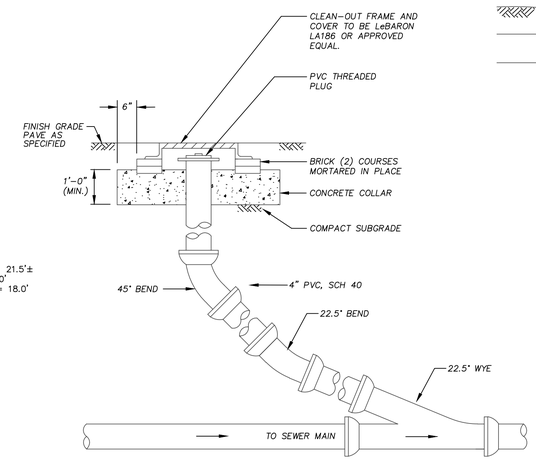

TYPICAL SEWER CLEAN-OUT DETAIL

NOT TO SCALE

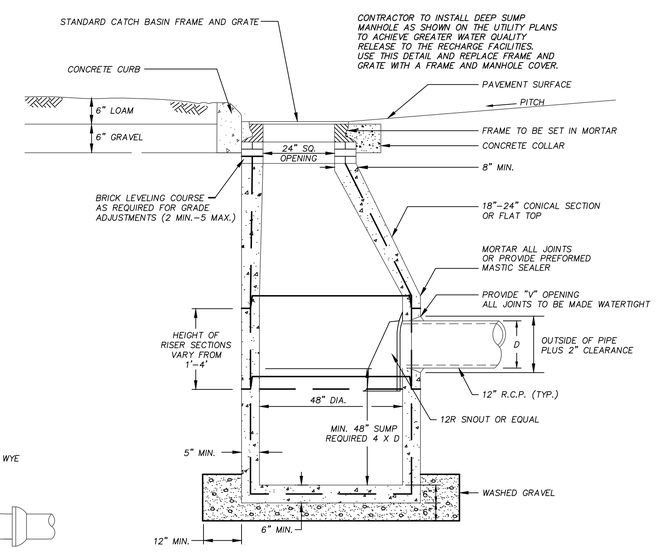

PRECAST CONCRETE CATCH BASIN

N.T.S.

DeCELLE BURKE & Associates, Inc.
1266 Furnace Brook Parkway, Suite 401 Quincy, MA 02169
(617) 405-5100 (O) (617) 405-5101 (F)

COMMONWEALTH OF MASSACHUSETTS JAMES W. BURKE No. 39418 REGISTERED PROFESSIONAL ENGINEER

JAMES W. BURKE, P.E. DATE

GENERAL NOTES:

1. LOCUS: ASSESSORS MAP 2067A BLOCK 110 LOT 22

RECORD OWNER: GLEN T & JEAN M MUNN
DEED REFERENCE: BOOK 7647 PAGE 326
PLAN REFERENCE: BOOK 1729 PAGE 489

2. THIS PLAN IS THE RESULT OF AN ON THE GROUND SURVEY PERFORMED BY THIS OFFICE IN JANUARY 2016. ELEVATIONS SHOWN ON NAVD 88 DATUM.

3. EXISTING UTILITIES WHERE SHOWN IN THE DRAWINGS ARE FROM SURFACE OBSERVATION AND RECORD INFORMATION AND SHOULD BE CONSIDERED APPROXIMATE. THE CONTRACTOR SHALL BE RESPONSIBLE FOR PROPERLY LOCATING AND COORDINATING THE PROPOSED CONSTRUCTION ACTIVITY WITH DIG-SAFE AND THE APPLICABLE UTILITY COMPANIES AND MAINTAINING THE EXISTING UTILITY SYSTEM IN SERVICE.

DIG-SAFE SHALL BE NOTIFIED PER THE STATE OF MASSACHUSETTS STATUTE CHAPTER 82, SECTION 409 AT TEL. 1-888-344-7233. THE ENGINEER DOES NOT GUARANTEE THEIR ACCURACY OR THAT ALL UTILITIES AND SUBSURFACE STRUCTURES ARE SHOWN. LOCATIONS AND ELEVATIONS OF UNDERGROUND UTILITIES WERE TAKEN FROM RECORD PLANS. THE CONTRACTOR SHALL VERIFY SIZE, LOCATION, AND INVERTS OF UTILITIES AND STRUCTURES AS REQUIRED PRIOR TO THE START OF CONSTRUCTION.

4. THE LOT SHOWN DOES NOT LIE IN A SPECIAL FLOOD HAZARD ZONE AS DELINEATED ON FIRM 25021C-0226F DATED JUNE 9, 2014.

5. PARCEL IS ZONED RESB.

MIN. LOT AREA = 6,750 S.F.
MIN. FRONTAGE = 75 FT.
MIN. FRONT YARD = 25 FT.
MIN. SIDE YARD = 25 FT.
MIN. REAR YARD = 25 FT.
MAX. STORIES = 3

6. AN AS-BUILT PLAN SHALL BE SUBMITTED TO THE QUINCY ENGINEERING DEPARTMENT UPON COMPLETION OF THE PROJECT AND PRIOR TO OCCUPANCY.

PROJECT TITLE & LOCATION:

CLEVERLY ESTATES
60 CLEVERLY COURT
QUINCY MA, 02169

PLAN TITLE:

CONSTRUCTION DETAILS

PREPARED FOR:

JOSEPH TAYLOR
147 BEALE STREET
QUINCY, MA 02169

DATE: FEBRUARY 26, 2016
REVISED: JUNE 1, 2016

JOB NUMBER: 200.017 | SHEET 4 OF 4

20 10 0 20 40
SCALE: 1"=20'