BID DOCUMENTS

TOWN BROOK OPEN SPACE IMPROVEMENTS PROJECT
QUINCY, MASSACHUSETTS

APRIL 2013

PREPARED FOR:

CITY OF QUINCY
PLANNING AND COMMUNITY DEVELOPMENT DEPARTMENT

DENNIS E. HARRINGTON
PLANNING DIRECTOR

KATHRYN HOBIN
CHIEF PROCUREMENT OFFICER

EBI Consulting
environmental | engineering | due diligence

21 B Street
Burlington, MA 01803
Tel: (781) 273-2500
Fax: (781) 273-3311
www.ebiconsulting.com

TABLE OF CONTENTS

DIVISION 00 – BIDDING AND CONTRACT REQUIREMENTS	**Section No.**
Invitation to Bid	001010
Instruction to Bidders	002100
Form of General Bid	004100
Bid Bond	004110
Representations and Certifications	004500
Certification of Bidder Regarding Equal Opportunity	
Right-To-Know Law Certification	
Non-Collusive Affidavit of Bidder	
Certification of Non-Segregated Facilities	
Affidavit Regarding Prior Labor Disputes	
CPA Certification	
Certification of Internal Accounting	
Certification of General and Sub-Bidders	004520
Agreement	005000
Performance Bond Form	006113.13
Payment Bond Form	006113.16
Certificate of Insurance	006216-1
Notice of Award	005100
Indemnity Agreement	005110
Contractor's Certification	005120
Notice to Proceed	005500
Certificate of Compliance with Tax Laws	006270
General Conditions	00700
Supplementary Conditions Part I – Amendments to the General Conditions	00800
Supplementary Conditions Part II – Statutory Requirements	00850
Determination of Wage Rates	
Permits	008900

DIVISION 01 – GENERAL REQUIREMENTS	
Summary of Work	011000
Special Provisions	011700
Measurement and Payment	012000
Submittals	013000
Control of Work	015000
Temporary Construction Facilities	015200
Traffic and Safety Controls	015500
Uniformed Officer for Traffic Control	015530
Environmental Protection	015700
Use and Control of Materials	016000
Project Closeout	017700

DIVISION 05 – METALS

Metal Fabrications 055000

DIVISION 10 – SPECIALTIES

Informational Kiosks 101800

DIVISION 12 – FURNISHINGS

Site Furnishings 129300

DIVISION 31 – EARTHWORK

Site Clearing 311000
Earth Stripping and Stockpiling 311400
Excavation and Fill 312300
Subgrade Preparation 312313
Erosion Control 312500

DIVISION 32 – EXTERIOR IMPROVEMENTS

Stone Paving 321423
Stone Curbs 321613.43
Site Cast-in-Place Concrete 321640
Metal Edging for Landscape Beds 323190
Site Walls 323219
Irrigation 328000
Sod Lawns 329200
Plants 329300

DIVISION 33 – UTILITIES

Storm Utility Drainage Piping 334100
Storm Drainage Ponds and Reservoirs 334726
Storm Utility Drainage Structures 334900
Electrical Work 337173

APPENDIX

City of Quincy Commission Order of Conditions DEP File No. 59-1261 Appendix A
MassDEP Water Quality Certification – Town Brook Realignment Transmittal #X239696 Appendix B

RELATIONSHIP TO OTHER CONTRACT DOCUMENTS

This Project Manual forms a part of the project entitled Town Brook Open Space Improvements, Quincy, Massachusetts - Project Manual - prepared by:

Karlis Skulte
EBI Consulting
21 B Street
Burlington, MA 01803

The work identified in this Project Manual and the associated drawings, listed on the Site Drawing Index that follows, although separately bound, forms a part of the Contract Documents referenced above. The work performed under the Project Manual shall be subject to the General Conditions, Supplemental Conditions of the Contract and Division 1 General Requirements of the above referenced project.

SITE DRAWING INDEX

Drawing No.	Title
C-1	Title Sheet
C-2	Legend & General Notes
C-3	Site Layout Plan
C-4	Details
L-1	Layout and Materials Plans
L-2	Landscape Plan
L-3	Landscape Details Sheet 1
L-4	Landscape Details Sheet 2
L-5	Irrigation Plan
L-6	Irrigation Details 1 of 2
L-7	Irrigation Details 2 of 2
E-1	Electrical Layout
E-2	Electrical Details
E-3	Electrical Details

INTENTIONALLY BLANK

CITY OF QUINCY, MASSACHUSETTS
Department of Public Works

Thomas P. Koch
Mayor

Dennis E. Harrington
Director of Planning and Urban Redevelopment

INVITATION TO BID

The Department of Planning and Community Development for the City of Quincy, Massachusetts is seeking sealed bids for **Town Brook Open Space Improvements Project** until 11:30 a.m. local time **Thursday, May 16, 2013**, in the offices of the Purchasing Agent, 1305 Hancock St., Quincy, Massachusetts 02169, at which time and place all bids will be publicly opened and read aloud.

The work under this contract consists of construction of the hardscape and landscape improvements of approximately 8,000 sf of open space adjacent to Town Brook. The work includes landscape planting, irrigation, sidewalk, stone wall, lighting; informational signage and various site appurtenances as required and all related work to complete the project.

All work under this contract shall be completed within Sixty (60) calendar days.

Detailed specifications are available on-line at the City of Quincy's website, www.quincyma.gov and also available at the Office of the Purchasing Agent, Quincy City Hall, 1305 Hancock Street, Quincy, Massachusetts, 02169, between the hours of 8:30 ^{AM} and 4:30 ^{PM} for a non-refundable printing charge of $50.00. Specifications will be available May 1, 2013.

Each bid shall be accompanied by a bid security in the amount of five percent (5%) of the total value of the bid in the form of a bid bond or certified/treasurer's check.

The bidding and award of this contract shall be in full compliance with Massachusetts General Laws, Chapter 30, Section 39M, as last revised. All applicable Federal, State and City of Quincy regulations in relation to Minority Business Enterprise, Women's Business Enterprise, Minority Work Force, Equal Employment Opportunity and subject to the minimum wage rates set under the Massachusetts Prevailing Wage Law Chapter 149, §26 to 27H and/or any applicable federal rates. The City reserves the right to waive any informality in or to reject any or all bids when such an action is deemed in the best interests of the City.

Non-responsive and/or unbalanced bids may be rejected.

Thomas P. Koch
Mayor

Dennis E. Harrington
Director of Planning and Urban Redevelopment

Advertise		Req. No.
The Quincy Sun	April 25, 2013	S051613
The Central Register	May 1, 2013	

1305 Hancock St., Quincy MA 02169
Telephone: (617) 376-1060 Fax: (617) 376-1074

INTENTIONALLY BLANK

INSTRUCTIONS TO BIDDERS

ARTICLE 1 PROJECT IDENTIFICATION

1.1 Owner: City of Quincy, Massachusetts

1.2 Awarding Authority: Kathryn R. Hobin
Purchasing Agent
1305 Hancock St., Quincy, MA 02169

1.3 Project Name: Town Brook Open Space Improvements

1.4 Funding:
a. The City of Quincy
b. Commonwealth of Massachusetts

1.5 The attached Documents are required to be submitted with the Bids. Failure to comply with these requirements may render the Bid non-responsive and thus be disqualified.

ARTICLE 2 QUALIFICATIONS OF BIDDERS

2.1 Bidders may be investigated by the City to determine if they are qualified to perform the work. Bidders shall submit within five (5) calendar days of the City's or Engineer's request, written evidence of such information and data necessary to make this determination.

2.2 The investigation of a Bidder will seek to determine whether the organization is adequate in size, is authorized to do business in the project jurisdiction, and has had previous experience and whether available equipment and financial resources are adequate to assure the City that the work will be completed in accordance with the terms of the Agreement. The amount of other work to which the Bidder is already committed may also be considered.

2.3 The City reserves the right to reject any Bid if the evidence submitted by, or the investigation of such Bidder fails to satisfy the City that such Bidder is properly qualified to carry out the obligations and the work included in the Contract Documents.

ARTICLE 3 COPIES OF CONTRACT DOCUMENTS

3.1 Complete sets of Contract Documents shall be used in preparing Bids; neither the City nor the Engineer assumes any responsibility for errors or misinterpretations resulting from the use of incomplete sets of Contract Documents.

3.2 The City and the Engineer in making copies of Contract Documents available do so only for the purpose of obtaining bids on the Work and do not confer a license or grant permission for any other use.

ARTICLE 4 EXAMINATION OF CONTRACT DOCUMENTS AND SITE

4.1 Before submitting a Bid, each Bidder must (a) examine the Contract Documents thoroughly, (b) visit the site to familiarize themselves with local conditions that may in any manner affect cost, progress or performance of the Work, (c) familiarize themselves with Federal, State and local laws, ordinances, rules and regulations that may in any manner affect cost, progress, or performance of the work; and (d) study and carefully correlate Bidder's observations with the requirements of the Contract Documents.

4.2 All information given in the Drawings and the other bid documents relating to sub-surface and other conditions, natural phenomena, existing utilities, pipelines, other structures, etc. is from the best sources available to the City. All such information is furnished only for the information and convenience of the Bidders and is not guaranteed.

4.3 Before submitting the Bid, each Bidder may, at his own expense, make such additional investigations and tests as the Bidder may deem necessary to determine the accuracy of their Bid for performance of the work in accordance with the time, price and other terms and conditions of the Contract Documents.

4.4 Upon request, the City will provide each Bidder access to the site to conduct such investigations and tests as each Bidder may deem necessary for submission of the Bid.

4.5 The lands upon which the work is to be performed and rights-of-way for access thereto are identified on the Drawings.

4.6 The submission of a Bid will constitute an incontrovertible representation by the Bidder that he has complied with every requirement of this Article 4 and that the Contract Documents are sufficient in scope and detail to indicate and convey understanding of all terms and conditions for performance of the work.

ARTICLE 5 INTERPRETATIONS

5.1 All questions about the meaning or intent of the Contract Documents must be received in writing by the City of Quincy Purchasing Department, 1305 Hancock St., Quincy, MA 02169, prior to the Bid Opening Date, as set forth in the Invitation to Bid.

5.2 Written clarifications or interpretations will be issued through Addenda. No addenda, except via FAX transmission or email, will be issued any later than 72 hours before the bid opening date. Only questions answered by formal written Addenda will be binding. Oral and other clarifications or interpretations will be without legal effect. Addenda will be sent out to all parties recorded to have received the Contract Documents.

5.3 Each Bidder shall be responsible for determining all Addenda issued have been received and incorporated into their Bid.

5.4 **A BID WHICH INCLUDES, FOR ANY ITEM, A BID PRICE THAT IS ABNORMALLY HIGH OR LOW, MAY BE REJECTED AS AN UNBALANCED BID.**

5.5 The quantities in the Bid Form are being set forth as a basis for the comparison of bids only and the actual amount of work may not correspond therewith.

5.6 The City reserves the right to delete all or any portion of the work or add new work or to decrease or increase the scope of any item of the work to be done under this Contract either prior to executing the Contract or at any time during the life of the Contract. Exercise by the City of the above rights shall not constitute any grounds or basis of claims for damages or for a loss of anticipated profits.

Also, an increase or a decrease of quantity for any bid item (regardless of its magnitude) shall not be regarded as a grounds or basis for any increase or decrease in the Contract unit prices, nor in the time allowed for the completion of the work except as provided for in the Contract.

ARTICLE 6 PRE-BID CONFERENCE

6.1 A Pre-Bid Conference will not be held. Any questions or requests of interpretations will be addressed in accordance with Article 5.

ARTICLE 7 BID SECURITY

7.1 Each bid must be accompanied by a bid bond or certified check or a treasurer's/cashiers check issued by a bona fide bank or trust company, payable to the City of Quincy. The Bid Security shall be in the amount of five percent (5%) of the Total Bid Price. The Bid Security shall be sealed in a separate envelope form the Bid and then attached to the envelope containing the Bid. All Bid Securities except those of the three lowest responsible and eligible bidders will be returned within ten calendar days after the opening of bids. All Bid securities will be returned on the execution of the Agreement, or if no award is made, within sixty calendar days after the actual Bid Opening Date, unless the bid security is forfeited under the conditions stipulated herein.

7.2 In case a party to whom a Contract is awarded shall fail or neglect to execute the Agreement and furnish the satisfactory bonds within the time specified, the City may determine that the bidder has abandoned the Contract, and thereupon the Bid Forms and acceptance thereof shall be null and void, and the Bid Security accompanying the Bid form shall be forfeited to the City as liquidated damages for such failure or neglect and to indemnify the said City for any loss which may be sustained by failure of the Bidder to execute the Agreement and furnish the bonds aforesaid, provided that the amount forfeited to the City shall not exceed the difference between the Bid Price of said Bidder and that of the next lowest responsible and eligible Bidder and provided further that, in case of death, disability or other unforeseen circumstances affecting the Bidder, such Bid Security may be returned. After execution of the Agreement and acceptance of

bonds by the City, the Bid Security accompanying the Bid Form of the Successful Bidder will be returned.

ARTICLE 8 PERFORMANCE, PAYMENT AND OTHER BONDS

8.1 Performance, Payment and other required bonds and project Insurance Certificates shall be provided in accordance with Article 5 of the General Conditions of the Contract.

8.2 All Bonds required, as Contract Security shall be furnished prior to the execution of the Agreement.

ARTICLE 9 BID FORMS

9.1 Each Bid shall be submitted on the Bid Form included in this Project Manual. All blank spaces for Bid prices must be filled in with unit or lump sum prices for each of the items for which the bid is requested.

9.2 Bid Forms shall be completed in ink or be typewritten. The Bid price of each item on the form shall be stated in words, and figures. Discrepancies between unit prices and their respective total amounts will be resolved in favor of the unit prices. Discrepancies between words and figures will be resolved in favor of words.

Discrepancies between the indicated sum of any column of figures and correct sum thereof shall be resolved in favor of the correct arithmetic sum, based on words.

9.3 Bids by corporations shall be executed in the corporation name, by the Chief Executive Officer (or other corporate officer). The bid must be accompanied by evidence of authority to sign the bid and the corporate seal shall be affixed and attested to by the secretary. The corporate address and state of incorporation shall be shown below the signature.

9.4 Bids by partnership shall be executed in the partnership name and signed by a partner, whose title shall appear under the signature. The official address of the partnership shall be shown below the signature.

9.5 All names shall be typed or printed below the signature.

9.6 The Bid shall confirm the receipt of all Addenda. Actual number of Addenda received shall be filled in on the Bid Form.

9.7 The address, telephone number and email address of the person to whom communications regarding the Bid are to be directed shall be shown.

9.8 Bids shall be submitted (original signatures) in a sealed envelope bearing on the outside the Bidder's name, address, Project Title, Bid opening date and time, for which the Bid is

submitted. If forwarded by mail, the Bid shall be enclosed in a sealed envelope with the notation **"BID ENCLOSED"** on the face and address as above.

ARTICLE 10 RECEIPT OF BIDS

10.1 Sealed bids for the work under this Contract will be received at the time and place indicated in the Invitation to Bid.

10.2 The City may consider informal any Bid not prepared and submitted in accordance with the provisions hereof.

10.3 Bidders are cautioned that it is the responsibility of each individual Bidder to insure that the bid is in the possession of the responsible official or a designated alternate prior to the stated time and at the place of the Bid Opening. The City is not responsible for bids delayed by mail and/or other forms of delivery.

ARTICLE 11 MODIFICATIONS AND WITHDRAWAL OF BIDS

11.1 Bids may be modified only by an appropriate document duly executed and delivered to the place where Bids are to be submitted at any time prior to the opening of Bids.

11.2 Bids may be withdrawn prior to the scheduled Bid Opening time or the authorized postponement thereof.

11.3 Bids, once officially opened, cannot be withdrawn and shall remain open for a period of sixty (60) calendar days from the date of the opening. The City, at its sole discretion, may release any bid and return the Bid Security prior to that date.

ARTICLE 12 AWARD OF CONTRACT

12.1 The Contract will be awarded to the lowest responsible and eligible bidder (Successful Bidder). Such a Bidder shall possess the skill, ability, job-related prior work experience, and integrity necessary for the faithful performance of the work and the bid, apart form being complete and responsive, is the lowest in price of all the bids opened.

12.2 The City reserves the right to reject any and all Bids, to waive any and all informalities, if it is in the City's best interest to do so, and the right to disregard all nonconforming, non-responsive, unbalanced and conditional Bids.

12.3 The City also reserves the right to reject the Bid of any Bidder who is considered to be unqualified in accordance with Article 2, above.

12.4 If the Contract is to be awarded, the City will give the Successful Bidder a Notice of Award within sixty (60) calendar days after the actual Bid Opening Date. The Notice of Award

will have to be formally acknowledged and accepted by the Bidder within the time period stipulated herein.

12.5 The acceptance of the above Notice of Award shall be accompanied by a complete list of sub-contractors (specialty, suppliers, and sub-consultants, etc.) selected by the Bidder to work on the project. The list shall contain information on the percentage of total work (material, labor, equipment and services) allocated to each sub-contractor.

ARTICLE 13 EXECUTION OF AGREEMENT

13.1 When the City gives a Notice of Award to the Successful Bidder, at least six (6)-unsigned copies of the Agreement and all other applicable Contract Documents will accompany it. Within ten (10) calendar days from the date of such notification, Contractor shall execute and return all copies of the Agreement and all other applicable Contract Documents to the City. Within ten-(10) calendar days thereafter, the City will deliver one fully signed copy along with the "Notice to Proceed" to the Contractor.

13.2 If for any reason the Notice to Proceed cannot be issued within such period, the time may be extended by mutual agreement between the City and the Contractor. If the Notice to Proceed has not been issued within the ten (10) calendar days after signing of the Agreement, or within the time period mutually agreed upon, the Contractor may terminate the Agreement without further liability on the part of either party.

13.3 The Bidder's attention is especially directed to special requirements in relation to project construction work and completion schedule, specified in the Division 01 Sections of this Project Manual. Each Bidder is urged to study these requirements to insure compliance with the same before submitting the Bid.

ARTICLE 14 SAFETY AND HEALTH REGULATIONS

14.1 This Project is subject to all of the Safety and Health Regulations (CFR 29, Part 1926 and all subsequent amendments) as promulgated by the U.S. Department of Labor on June 24, 1974, and CFR 29, Part 1910, General Industry Safety and Health Regulations Identified as Applicable to Construction.

14.2 The Successful Bidder shall comply with the Department of Labor Safety and Health Regulations for Construction promulgated under the Occupational Safety and Health Act of 1970 (PL-91-596) and under Section 107 of the Contract Work Hours and Safety Standards Act (PL-91-54).

14.3 The Successful Bidder shall have a competent person or persons, as required under the Occupational Safety and Health Act on the site to inspect the Work and to supervise the conformance of the Work with the regulations of the Act.

14.4 This project is also subject to the Massachusetts Department of Labor and Industries Division of Industrial Safety "Rules and Regulations for the Prevention of Accidents in Construction Operations (Industrial Bulletin No. 12)".

ARTICLE 15 SALES TAX

15.1 The materials and supplies to be used in the Work shall be exempt from all applicable Federal, State and local sales taxes.

ARTICLE 16 UTILITY UNDERGROUND PLANT DAMAGE PREVENTION SYSTEM

16.1 All excavations within public or private ways are subject to the requirements of Massachusetts General Laws, Acts of 1983, Chapter 252, included in Part II of the Supplementary Conditions.

ARTICLE 17 WAGE RATES

17.1 All work done under this Contract shall be subject to compliance with the minimum wage rates as mandated by the Commonwealth of Massachusetts Department of Labor and Industries and the U.S. Department of Labor Wage Rates issued in the most recent wage decisions applicable to the project area.

17.2 The Commonwealth of Massachusetts Minimum Wage Rates issued under the provisions of the Massachusetts General Laws, Chapter 149, Section 26 to 27H, as amended, shall apply to the projects when the use of Federal funds is not involved on a particular project.

17.3 The Schedule of Minimum Wage Rates is included in the Appendices and shall be strictly enforced.

17.4 It is the responsibility of the Contractor, before submitting the Bid, to verify the minimum wage rates and to request, if necessary, any additional and/or the latest information on wage rates for all tradespeople to be employed under this contract.

ARTICLE 18 COMPETITIVE BIDDING

18.1 The Bidding and award of this contract shall be in full compliance with the Federal Procurement Act and with MGL Chapter 30, Section 39M, as last revised.

ARTICLE 19 GUARANTEES

19.1 In addition to other guarantees due the City, the Contractor guarantees that the Work and services to be performed under the Contract, and all workmanship, materials, and equipment furnished, used or installed shall be free from defects and flaws, and shall be in strict accordance with the Drawings, Specifications, and other Contract Documents. Also, the strength of all parts of all manufactured equipment shall be adequate and as specified and that the performance test

requirements of the Contract shall be fulfilled. This guarantee shall be for a period of one year from and after the date of Substantial Completion and acceptance of the Work unless otherwise specified herein.

The Performance Bond shall remain in full force and effect throughout the Guarantee Period.

19.2 If at any time within the said period of guarantee, any part of the Work requires repairs, correction and/or replacement, the City may notify the Contractor in writing to make the required repairs, correction or replacement. If the Contractor neglects to commence making such repairs, corrections, or replacements to the satisfaction of the City within ten (10) days from the date of receipt of such notice, or having commenced said repairs, corrections or replacement, fails to prosecute such work with diligence, the City may employ other person(s) to make the same, and all direct and indirect costs of making said repairs, corrections or replacements, including compensation for additional professional services, shall be paid by the Contractor.

ARTICLE 20 LABOR DISPUTES

20.1 The Bidder shall submit a written statement as to whether it has been the subject of, or otherwise been involved in any labor dispute during the past five (5) years. If the bidder has been the subject of, or otherwise been involved in any labor dispute during this period, the Bidder must also provide a detailed description of each labor dispute, including the name and location of the project worked on, the nature of the dispute, the duration and dates during which the dispute took place and how the dispute was resolved. For these purposes, "labor disputes" shall include picketing or any other activity which disrupted or delayed the Work.

ARTICLE 21 RECORD KEEPING

21.1 The Contractor is reminded that the provisions of Chapter 30, Section 39R relative to record keeping apply to this Contract. A copy of c.30, s.39R is included in the Supplementary Conditions. A brief summary of the requirements is as follows:

a. The Contractor and all sub-contractors shall maintain books, records and accounts at least six (6) years after the final payment. They will be subject to inspection by the awarding authority, officers of the Inspector General, or the Department of Capital Asset Management.

b. Any changes in record keeping or recording transactions, which affect the awarding authority, shall be explained along with a letter from the Contractor's independent certified public accountant approving or otherwise commenting on the change.

c. The Contractor shall file with the awarding authority a statement of management as to whether the system of internal accounting controls has been established.

d. The Contractor shall file with the awarding authority a statement prepared and signed by an independent certified public account that an examination has been made of internal accounting controls.

ARTICLE 22 LAWS AND REGULATIONS

22.1 All applicable laws, ordinances and rules and regulations of all Public Agencies having jurisdiction over construction of the project shall apply to the Contract throughout.

22.2 This project is subject to all of the OSHA Safety and Health Regulations (see CFR Part 1926/1910 and all subsequent amendments), as promulgated by the United States Department of Labor on June 24, 1974 and MGL Chapter 454 CMR 10.00, et.seq.; The Prevention of Accidents and Illnesses in Construction Operations. Contractors shall become familiar with the requirements of these regulations.

Kathryn R. Hobin
Purchasing Agent

INTENTIONALLY BLANK

FORM OF GENERAL BID

PROPOSAL OF: _____

(hereinafter called "Bidder", organized and existing under the laws of the Commonwealth of Massachusetts, doing business as:

- a corporation
- a partnership
- an individual.

TO: The Director of Planning and Urban Redevelopment for the City of Quincy, Massachusetts (hereinafter called the "City" or "Owner")

In compliance with your Advertisements for Bids, Bidder hereby proposes to perform all work for the **Town Brook Open Space Improvement Project** within ten (10) calendar days following the effective date of the Contract Agreement and fully complete the project within sixty (60) calendar days thereafter. Work performed after this Contract Time Period (Completion) will be subject to liquidated damages. The Bidder further agrees to pay as liquidated damages: $1,000.00 for each day thereafter, charged against the Contractor, as provided for in Article 12 of the General Conditions.

Bidder agrees not to withdraw his bid for sixty (60) calendar days after the actual bid opening date and that if the City shall accept this bid, the Bidder will duly execute and acknowledge the Agreement and furnish duly executed and acknowledged, the required Contract Bonds, Insurance Certificates and other documents, <u>within ten (10) calendar days</u>, after the notification that the Agreement and other documents are ready for signature.

Bidder acknowledges receipt of Addenda No. ___ through No.___.

The attached price is to include and cover the furnishing of all materials (except as herein otherwise specified), all labor (requisite or proper), tools, equipment, apparatus and other means of construction, required in the performance of the works included herein, in the manner set forth and shown in the Specifications for the Work and in the form of Contract, and the **<u>completion</u>** thereof as specified herein. Bidder agrees to perform all the work described in the Contract Documents at the following unit price(s)/lump sum(s) for a total amount of:

_____DOLLARS
(in Words)

($ _____)
(in Figures)

All prices, except at the extended totals, shall be stated in both words and figures. In the event of a discrepancy between the price in words and the price in figures, the written word shall govern. In the event of a discrepancy between mathematical totals and the totals stated, the mathematical totals shall govern. All prices shall be typewritten or written by hand (printed) in black ink.

BID FORM

The Bidder agrees to perform all the Work described in the Contract Documents for the following unit prices or lump sum(s):

Item No.	Estimated Quantity	Brief Description of Items w/ Unit Bid Price in Words	Unit Bid Price in Figures	Amount in Figures
055000	**1**	**METAL FABRICATIONS**		
		_____ lump sum	$ _____	$ _____
101800.01	**6**	**INFORMATIONAL KIOSKS**		
		_____ each	$_____	$_____
129300	**1**	**SITE FURNISHINGS**		
		_____ lump sum	$_____	$_____
311400	**1**	**EARTH STRIPPING AND STOCKPILING**		
		_____ lump sum	$_____	$_____
312300	**1**	**EXCAVATION AND FILL**		
		_____ lump sum	$_____	$_____
312313	**1**	**SUBGRADE PREPARATION**		
		_____ lump sum	$_____	$_____
312500	**1**	**EROSION CONTROL**		
		_____ lump sum	$_____	$_____

SUB-TOTAL PAGE 004100-2: $ _____

321423	**1**	**STONE PAVING**		
		_____ lump sum	$_____	$_____
321613.43	**40**	**VERTICAL GRANITE CURB**		
		_____ per linear foot	$_____	$_____
321640	**45**	**SITE CAST-IN-PLACE CONCRETE**		
		_____ per cubic yard	$_____	$_____
323190	**1**	**METAL EDGING FOR LANDSCAPE BEDS**		
		_____ lump sum	$_____	$_____
323219-01	**570**	**STONE WALLS, PIER, AND CAPSTONES**		
		_____ per square foot face (sff)	$_____	$_____
323219-02	**14**	**GRANITE BLOCKS (12” REVEAL)**		
		_____ each	$_____	$_____
323219-03	**20**	**GRANITE BLOCKS (18” REVEAL)**		
		_____ each	$_____	$_____
328000	**1**	**IRRIGATION**		
		_____ lump sum	$_____	$_____
329200	**1**	**SOD LAWNS**		
		_____ lump sum	$_____	$_____

SUB-TOTAL PAGE 004100-3: $ _____

329300 **1** **PLANTS**

_____ $_____ $_____
lump sum

334100-01 **110** **4" PERFORATED HDPE PIPE**

_____ $_____ $_____
per linear foot

334100-02 **60** **12" HDPE PIPE**

_____ $_____ $_____
per linear foot

334726 **1** **BIORETENTION BASINS**

_____ $_____ $_____
lump sum

334900 **3** **LANDSCAPE DRAINS**

_____ $_____ $_____
each

337173 **1** **ELECTRICAL WORK**

_____ $_____ $_____
lump sum

999999.01 **320** **UNIFORMED OFFICER FOR TRAFFIC CONTROL**

Forty-two Dollars and Zero Cents $ 42.00 $ 13,440.00
per hour

SUB-TOTAL PAGE 004100-4: $ _____

SUBTOTAL PAGE 004100-2 $_____

SUBTOTAL PAGE 004100-3 $_____

SUBTOTAL PAGE 004100-4 $_____

TOTAL BID AMOUNT $_____
(In Figures)

TOTAL BID AMOUNT: **$**_____
(In Figures)

_____

(Total Bid Amount Written In Words)

A. The undersigned agrees that, if he/she is selected as General Contractor, he/she will within ten (10) days, Saturdays, Sundays and legal holidays excluded, after presentation thereof by the Awarding Authority, execute a contract in accordance with the terms of this Bid and furnish a Performance Bond and also a Labor and Materials or Payment Bond, each of a surety company qualified to do business under the laws of the Commonwealth and satisfactory to the Awarding Authority and each in the sum of the Contract Price, the premiums for which are to be paid by the General Contractor and are included in the Contract Price.

B. The undersigned hereby certifies that he/she is able to furnish labor that can work in harmony with all other elements of labor employed or to be employed on the work and that he/she will comply fully with all laws and regulations applicable to awards made subject to M.G.L. Section 44 A.

C. The undersigned certifies under penalties of perjury that there have been no substantial changes in his financial position or business organization other than those changes noted within the application since the applicant's most recent prequalification statement and that the bid is in all respects bonafide, fair and made without collusion or fraud with any other person. "Person" shall mean any natural person, joint venture, partnership, corporation or other business or legal entity which sells materials, equipment or supplies used in or for, or engages in the performance of, the same or similar construction, reconstruction, installation, demolition, maintenance or repair work or any part thereof.

D. The undersigned further certifies under the penalties of perjury that this Bid is in all respects bona fide, fair and made without collusion or fraud with any other person. As used in this subsection, the word “person” shall mean any natural person, joint venture, partnership, corporation or other business or legal entity.

E. The undersigned further certifies under penalty of perjury that the said undersigned is not presently debarred from doing public construction work in the Commonwealth under the provision of Section Twenty-Nine F of Chapter Twenty-Nine, or any other applicable debarment provisions of any other Chapter of the General Laws or any rule or regulation promulgated thereunder.

F. A Labor and Material or Payment Bond in the amount of 100% of the total Contract Price must be

provided by the General Contractor. A Performance Bond in the amount of 100% of the total Contract Price must be provided by the General Contractor.

G. The time for holding bids, where Federal approval is not required is sixty (60) days, Saturdays, Sundays and legal holidays excluded, after opening of bids and where Federal approval is required, the time period for holding bids is sixty (60) days, Saturdays, Sundays and holidays excluded after Federal approval.

H. This project is subject to all requirements of M.G.L. Chapter 30, Section 39M and applicable requirements of MGL Chapter 149.

I. The time for substantial completion of this Contract is as set forth in the Invitation to Bid. Liquidated damages shall be assessed as set forth in the agreement. The Work will be considered complete and ready for final payment after warranty inspection is completed.

J. Interest of Officers and Employees of the City of Quincy or Members of the City Council or Other Public Officials: No officer, member or employee of the City of Quincy or its designees or agents, and no member of its governing body, and no other public official of the governing body of the locality or localities in which the project is situated or being carried out, who exercises any function or responsibilities in the review or approval or the undertaking or carrying out of this project, shall participate in any decisions relating to this Contract, which affects his personal interest or the interest of any corporation, partnership, or associations in which he is directly or indirectly interested or have any personal or pecuniary interest, direct or indirect, in this contract or proceeds thereof.

BID FORM

The Bidder hereby certifies that he is able to furnish labor that can work in harmony with all other elements of labor employed or to be employed on the work and that he will comply fully with all laws and regulations applicable to awards made in the Commonwealth of Massachusetts.

The Bidder certifies under the penalties of perjury that this bid is in all respects bona fide, fair and made without collusion or fraud with any other person. As used herein, the word "person" shall mean any natural person, joint venture, partnership, corporation, or other business or legal entity.

Interest of Officers and Employees of the City of Quincy or Members of the City Council or Other Public Officials: No officer, member or employee of the City of Quincy or its designees or agents, and no member of its governing body, and no other public official of the governing body of the locality or localities in which the project is situated or being carried out, who exercises any functions or responsibilities in the review or approval or the undertaking or carrying out of this project, shall participate in any decisions relating to this Contract, which affects his personal interest or the interest of any corporation, partnership, or association in which he is directly or indirectly interested or have any personal or pecuniary interest, direct or indirect, in this contract or the proceeds thereof.

The undersigned, as Bidder, declares that he has carefully examined the proposed form and has fully informed and satisfied himself as to the existing conditions, the character and requirements of the proposed work, the difficulties attendant upon its execution; and the accuracy of all estimated quantities stated in this bid and that he has carefully read and examined the form of contract, the standard specifications and plans therein referred to, and he proposes and agrees, if this proposal is accepted, that he will contract with the Party of the First Part to provide all necessary labor, equipment, tools, apparatus and other means of construction and to do all the work and furnish all the materials specified in the contract in the manner and time therein prescribed and according to the requirements of the City of Quincy as therein set forth and that he will take the payment therefore, the prices stated in the Bid.

The undersigned, as Bidder, declares that he understands that information relative to sub-surface and other conditions, natural phenomena, existing pipes and other structures (surface and/or sub-surface) has been furnished only for his information and convenience without any warranty or guarantee, expressed or implied, that the structures (surface and/or sub-surface) actually encountered will be the same as those shown on the drawings or in any of the other contract documents, and he agrees that he shall not use or be entitled to use any such information made available to him through the contract documents or otherwise, or obtained by him in his own examination or the site, as a basis or grounds for any claim against the City of the Engineer arising from or by reason or any variance which may exist between the aforesaid information made available to or acquired by him and the sub-surface and/or other conditions, natural phenomena, existing pipes and other structures (surface and/or sub-surface) encountered during construction, and that due allowance therefore has been made in this bid.

The undersigned, as Bidder, understands that the quantities of work tabulated in this bid or indicated

on the drawings or in the specifications or other contract documents are only approximate and are subject to increase or decrease, as deemed necessary by the Engineer.

The undersigned, as Bidder, agrees that for extra work, if any, performed in accordance with the terms and provisions of the annexed form of Agreement, he will accept compensation as stipulated therein as full payment for such extra work.

If this proposal shall be accepted and the Bidder shall fail to contract as aforesaid and to give a Bond in the sum to be determined as aforesaid with surety satisfactory to the City of Quincy **within ten (10) days** from the date of the mailing of the Notice of Award from the City of Quincy to him, according to the address herewith given, the City of Quincy may, at its option, determine that the bidder has abandoned the contract, and thereupon this proposal and acceptance thereof shall be null and void, and the certified check or bid submitted covering this proposal shall become the property of the City of Quincy, otherwise said certified check or bid bond shall be returned to the Bidder.

This bid must bear the written signature of the Bidder, or an authorized agent of the bidder. If the bidder is a corporation or a partnership, the bid must be signed by a duly authorized officer of such corporation or partnership, and the title of such an officer must be stated.

The Bidder offers the following information as evidence or qualifications to perform the work as bid in accordance with the requirements of the plans and specifications.

BID FORM

RELEVANT PREVIOUS EXPERIENCE

The Bidder shall list below the relevant prior work experience on similar projects, and give references that will enable the City to evaluate his qualifications to perform the work under this Contract. The length of the relevant experience must be at least 5 years on projects of comparable size and complexity. The evaluation shall be based on prior experience, work performance and level of key personnel skills, and business standing (add additional page if necessary).

I. PROJECTS

	Completion Date	Project Name	Contract Amount	Design Reference Engineer Name	Reference Phone No.
a.					
b.					
c.					
d.					
e.					
f.					

II. KEY PERSONNEL:

Key personnel to be employed on the job, in the event of contract award. Attach brief education and experience where applicable.

1. _____

2. _____

3. _____

4. _____

BID FORM

STATEMENT OF BIDDER'S QUALIFICATIONS

All questions must be answered and the date given must be clear and comprehensive. This statement must be notarized. If necessary, questions may be answered on separate attached sheet. The bidder may submit any additional information, if desired.

1. Name of Bidder:

2. Permanent main office address:

   a. Treasury Number (Employer's Identification No.):

3. When organized?

4. If a corporation, where incorporated?

5. How many years have you been engaged in the contracting business under your present firm or trade name?

   a. Names and home addresses of principal officers and their social security numbers: (attach separate sheet).

6. Contracts on hand: (Schedule these, showing gross amount of each contract and the approximate anticipated dates of completion. Name and address of client and name of person supervising for client.) (Attach separate sheet)

7. General character of work performed by your company?

8. Have you ever failed to complete any work awarded to you? If so, where and why?

9. Have you ever defaulted on a contract? If so, where and why?

10. List the more important contracts recently completed by you stating approximate cost of each, and the month and year completed. (Give names and addresses of client and name of person supervising for client). (See attached form.)

11. List your major equipment available for this contract. (Use separate sheet)

12. Experience in construction work similar in importance to this project. (See form)

13. Background and experience of the principle members of your organization, including the

officers.

14. Credit available: $_____.

15. Give bank reference, including bank name, address, telephone and contact name.

16. Will you, upon request, fill out a detailed financial statement and furnish any other information that may be required?

17. The undersigned hereby authorizes and requests any person, firm, or corporation to furnish any information requested by the City of Quincy in verification of the recitals comprising this Statement of Bidder's Qualifications.

Dated this _____ day of _____, 20___.

Name of Bidder: _____

By:_____

Title:_____

State of _____

County of _____

_____ being duly sworn, deposed and says that he is

_____ of _____
(office) (Name of Organization)

and that the answers to the foregoing questions and all statements contained therein are true and correct.

SUBSCRIBED AND SWORN TO, before me the _____ day of _____ , 20_____

_____
(Notary Public) Seal

My commission expires:_____

CITY OF QUINCY
Purchasing Department
1305 Hancock Street, Quincy, MA 02169

Phone: (617) 376-1060
Fax: (617) 376-1074

SIGNATURE AUTHORIZATION

At a duly authorized meeting of the Board of Directors of the

_____
(NAME OF CORPORATION)

held on _____, at which all the Directors were present or waived notice, it was
(DATE)

VOTED, that:

_____ _____
(NAME) (OFFICER)

of this company, be and he/she hereby is authorized to execute Contracts and Bonds in the name and behalf of said Company, and affix its Corporate Seal thereto, and such execution of any Contract or obligation in this Company's name on its behalf by such _____ under seal of the Company, shall be valid
(OFFICER)

and binding upon this Company. It was further voted that the City of Quincy may rely on such authorization of future Contracts until notified to the contrary.

A true copy,

ATTEST: _____
(CLERK'S SIGNATURE)

PLACE OF BUSINESS: _____

DATE OF THIS CONTRACT: _____

I hereby certify that I am the Clerk of the:

_____ that _____ is the
(COMPANY) (NAME)

duly elected _____ of said Company, and that the above VOTE has not been
(TITLE)

amended or rescinded and remains in full force and effect as of the date of this Contract.

_____ **CORPORATE SEAL**

CERTIFICATE OF ACKNOWLEDGMENT
OF CONTRACTOR FOR BID

State of

] Date: _____ 20

County of

On this _____ day of _____ , 20_____,

before me personally appeared _____

who being duly sworn, did depose and say as follows:

_____, that said firm consist of
(Company Name)

_____
(name of principals in firm and position)

_____

_____

that he executed the foregoing instrument on behalf of said firm for the uses and purposes stated herein. If a corporation, the seal affixed to the foregoing instrument is such corporate seal and it was so affixed by order of the Board of Directors of said corporation, and that by like order, he signed thereto his name and official designation.

_____
(Notary Public) (Seal)

My commission expires:_____

SIGNATURE PAGE

DATED: _____

BY: _____
(Signature and Title of Person Authorized to Sign Bid)

_____
(Name of General Bidder)

_____
(Business Address)

_____
(Social Security Number – Federal Tax ID No.)

Telephone Number: (_____) _____

Email: _____

(SEAL: IF BID IS BY A CORPORATION)

ATTEST: _____

The proposed surety company on the bond to be given as follows:

_____
(Contact Name)

_____
(Name of Surety)

_____
(Address of Home Office)

_____
(Massachusetts Address, if different)

_____
(Business Telephone)

This form may be substituted with standardized form issued by insurance/bonding agent.

BID BOND

KNOW ALL MEN BY THESE PRESENT, that we, the undersigned,

_____ as Principal and

_____ as Surety, are hereby held and firmly bound unto

_____ as OWNER in the penal sum of

for the payment of which, well and truly to be made, we hereby jointly and severally bind ourselves,

successors and assigns _____ .

Signed this _____ day of _____ , 20

The Condition of the above obligation is such that whereas the Principal has submitted to:

_____ a certain BID, attached hereto and hereby made a part hereof

to enter into a contract in writing for the:

_____

NOW, THEREFORE,

(A) If said BID shall be rejected, or

(B) If said BID shall be accepted and the Principal shall execute and deliver a contract int he Form of Contract attached hereto (properly completed in accordance with said BID) and shall furnish a BOND for his faithful performance of said contract, and for the payment of all persons performing labor, or furnishing materials in connection therewith, and shall in all other respects perform the agreement created by the acceptance of said BID, then this obligation shall be void, otherwise the same shall remain in force and effect; it being expressly understood and agreed that the liability of the Surety for any and all claims hereunder shall, in no event, exceed the penal amount of this obligation as herein stated.

The Surety, for value received, hereby stipulates and agrees that the obligations of said Surety and its BOND shall in no way be impaired or affected by any extension of the time within which the OWNER may accept such BID, and said Surety does hereby waive notice of any such extension.

This form may be substituted with standardized form issued by insurance/bonding agent.

IN WITNESS WHEREOF, the Principal and the Surety have hereunto set their hands and seals, and such of them as are corporations have caused their corporate seals to be hereto affixed and these present to be signed by their proper officers the day and year first set forth above.

_____ (L.S.)
Principal

_____
Surety

BY:_____

IMPORTANT: Surety companies executing BONDS must appear on the Treasury Department's most current list (Cir. 570, as amended) and be authorized to transact business in the state where the project is located.

CERTIFICATION OF BIDDER
REGARDING EQUAL EMPLOYMENT OPPORTUNITY

This certification is required pursuant to Executive Order 112A6 (30 R.R. 123 1935). The implementing rules and regulations, provide that any bidder or prospective contractor, or any of their proposed subcontractors, shall state as an initial part of the bid or negotiations of the contract whether it has participated in any previous contract or subcontract subject to the equal opportunity cause: and, if so, whether it has filed all compliance reports due under applicable instructions.

Where the certification indicates that the bidder has not filed a compliance report due under applicable instructions, such bidder shall be required to submit a compliance report within seven (7) calendar days after bid opening. No contract shall be awarded unless such report is submitted.

CERTIFICATION BY BIDDER

NAMES AND ADDRESS OF BIDDER (Include Zip Code):

1. Bidder has participated in a previous contract or subcontract subject to the Equal Opportunity Clause.

   Yes No

2. Compliance reports were required to be filed in connection with such contract or subcontract.

   Yes No

3. Bidder has filed all compliance reports due under applicable instructions, including SF-100.

   Yes No

4. Have you ever been or are you being considered for sanction due to violation of the Executive of 112A6, as amended?

   Yes No

Name and Title of Signatory (Please Type)

Signature:_____ Date:_____

RIGHT-TO-KNOW LAW

A bidder will not be eligible for award of this contract under this invitation for bids unless such bidder has submitted as part of its bid the following certification which will be deemed a part of the resulting contract.

CERTIFICATION

The Bidder hereby certifies that, if awarded this contract, he will fully comply with the Massachusetts Right-To-Know Law, c.470 of the Acts of 1983, (the Act). In addition, he shall:

1. obtain a Material Safety Data Sheet (MSDS), for all substances or mixtures of which appear on the Massachusetts Substance List that he or any of his subcontractors brings to or uses on the work site and will keep a copy of the MSDS on the work site of this contract;

2. label each container of a substance or mixture of substances on the Massachusetts Substance List, as required, in section 7 of the Act;

3. provide the same training and non-technical instruction that he is required to provide under section 15 of the Act to all Quincy personnel. Training shall include instructing on the nature and effects of any substance or mixture of substances listed on the Massachusetts Substance List which the Bidder or any of his subcontractors brings to or uses on the worksite.

4. provide to Quincy DPW employees on the work site the same protective equipment that the bidder or any of his subcontractors provides to his employees.

_____
Signature of Authorized Representative of Bidder

Bidder's Name: _____

Bidder's Address: _____

_____

NON-COLLUSION AFFIDAVIT

A bidder will not be eligible for award of this contract under this invitation for bids unless such bidder has submitted as part of its bid the following certification which will be deemed a part of the resulting contract.

State of _____

Date: _____ 20_____

County of _____

The undersigned being duly sworn, deposes and says that he is the:

_____

(sole owner, partner, president, treasurer, or other duly authorized official)

of _____

(name of company - bidder - as appears in submitted proposal)

for work in _____ on _____

(City/Town) (Bid Opening Date)

and certifies under penalties of perjury that this bid is in all respects bona fide, fair and made without collusion or fraud with any other person. As used in this paragraph the word "person" shall mean any natural person, joint venture, partnership, corporation or other business or legal entity.

_____

Signature/Title of Person Making Affidavit

Sworn to before me this:

_____ day of _____ 20_____

_____

(Notary Public)

My commission expires: _____ 20_____

CERTIFICATION
NON-SEGREGATED FACILITIES

The Bidder certifies that he does not maintain or provide for his employees any segregated facilities at any of his establishments, and that he does not permit his employees to perform their services at any location, under this control, where segregated facilities are maintained. The Bidder certifies further that he will not maintain or provide for his employees any segregated facilities at any of his establishments and that he will not permit his employees to perform their services at any location under his control where segregated facilities are maintained. The Bidder agrees that a breach of this certification will be a violation of the Equal Opportunity clause in any contract resulting from acceptance of this bid. As used in this certification, the term "segregated facilities" means any waiting rooms, work areas, restrooms, and washrooms, restaurants and other eating areas, timeclocks, locker rooms, and other storage or dressing areas, parking lots, drinking fountains, recreation or entertainment areas, transportation and housing facilities provided for employees which are segregated by explicit directive or are in fact segregated on the basis of race, color, religion or national origin, because of habit, local custom or otherwise. The Bidder agrees that (except where he has obtained identical certification from proposed subcontractors for specific time periods) he will obtain identical certifications from proposed subcontractors prior to the award of subcontracts exceeding $10,000.00 which are not exempt from the provisions of the Equal Opportunity clause, and that he will retain such certifications in his file.

Note: The penalty for making false statements in offers is prescribed in 18 U.S.C. ss.1001.

Date:_____, 20____

_____
(Name of Bidder)

Official Address (including Zip Code)

By:

_____

_____
(Title)

_____

AFFIDAVIT
REGARDING PRIOR LABOR DISPUTES

The Bidder must execute and complete the following statements as to whether it has been the subject of, or otherwise been involved in, any labor dispute during the past five (5) years. If the Bidder has been the subject of, or otherwise been involved in any labor dispute during this period, the bidder must also provide a detailed description of each labor dispute, including the name and location of the project worked on, the nature of the dispute was resolved. For these purposes, "labor disputes" shall include picketing or any other activity which disrupted or delayed the work.

I _____ , being first duly sworn, do hereby depose/state:
(Name)

1. I make each of the following statements with full authorization to bind

   _____ to each of the representations made below.
   (Name of Bidder)

2. _____ has/has not been involved in a labor dispute
   (Name of Bidder)

   as described above, within the past five (5) years.

3. (Complete only if bidder has been involved in dispute).

   The dispute(s) occurred on the following project(s). (Use separate sheet if necessary)

Name and Location of Project	Date Dispute Began	Date Concluded
a.		
b.		

   Attach separate sheet and give full description of the nature of each dispute and an explanation of how it was resolved. (Please give a full description below, for each such dispute).

Signed under the penalty of perjury this _____ day of _____ , 20____ .

BY: _____

on behalf of: _____
(Company name)

(To be typed onto letterhead of the Certified Public Accountant)

City of Quincy
City Solicitor's Office
1305 Hancock Street
Quincy, MA 02169

Attn: James S. Timmins
City Solicitor

RE: Town Brook Open Space Improvements
Project Name

Dear Mr.Timmins:

Please be advised that I have reviewed the statement on internal accounting controls prepared by/for _____ (Name of Company), in connection with the above captioned project. This statement is required under Massachusetts General Laws, Chapter 30, Section 39R. In our opinion, representations of management are consistent with our evaluation of the system of internal accounting controls. In addition, we believe that they are reasonable with respect to transactions and assets in amounts which would be material when measured in relation to the firm's financial statements.

Yours sincerely,

_____
Certified Public Accountant

Note to awarded vendor: This form is to be completed **ONLY** when the contract exceeds $100,000. and is for the purchase of materials or for the construction, renovation, etc. of public works or public buildings.

CERTIFICATION

Internal Accounting

The Contractor certifies that it has internal accounting controls, as required by Chapter 30, Section 39R and that the Contractor will:

1. maintain accurate and detailed accounts for a six (6) year period after the final payment;

2. file regular statements of management concerning internal auditing controls;

3. file an annual audited financial statement; and

4. submit a statement from an independent certified public accountant that such CPA has examined management's internal auditing controls and expresses an opinion as to their consistency with management's statements in (2) above, and whether such statements are reasonable with respect to transactions and assets that are substantial in relation to designer's financial statements. General Laws, Chapter 7, Section 301 (e).

Signed under the pains and penalties of perjury:

_____

Name of Company

_____

Authorized Signature

Note to awarded vendor: This form is to be completed **ONLY** when the contract exceeds $100,000 and is for the purchase of materials or for the construction, renovation, etc. of public works or public buildings.

INTENTIONALLY BLANK

CERTIFICATION OF GENERAL BIDDERS ON PUBLIC CONSTRUCTION PROJECTS

I. CERTIFICATION REGARDING HEALTH AND SAFETY

The undersigned hereby certifies that he is able to furnish labor that can work in harmony with all other elements of labor employed or to be employed on the work; that all employees to be employed at the worksite will have successfully completed a course in construction safety and health approved by the United States Occupational Safety and Health Administration that is at least ten hours in duration at the time the employee begins work and who shall furnish documentation of successful completion of said course with the first certified payroll report for each employee; and that he will comply fully with all laws and regulations application to awards made subject to section 44A.

II. CERTIFICATION REGARDING NON-COLLUSION AND DEBARMENT

The undersigned further certifies under the penalties of perjury that this bid is in all respects bona fide, fair and made without collusion or fraud with any other person. As used in this subsection the word "person" shall mean any natural person, joint venture, partnership, corporation or other business or legal entity. The undersigned further certifies under penalty of perjury that the said undersigned is not presently debarred from doing public construction work in the Commonwealth under the provisions of section twenty-nine F of chapter twenty-nine, or any other applicable debarment provisions of any other chapter of the General Laws or any rule or regulation promulgated thereunder.

Date: _____

_____
Name of General Bidder

By _____
Signature

_____
Print name and title

_____
Business Address

_____
Street Address City and State

CERTIFICATION OF SUB- BIDDERS (IF ANY) ON PUBLIC CONSTRUCTION PROJECTS

I. CERTIFICATION REGARDING HEALTH AND SAFETY

The undersigned hereby certifies that he is able to furnish labor that can work in harmony with all other elements of labor employed or to be employed on the work; that all employees to be employed at the worksite will have successfully completed a course in construction safety and health approved by the United States Occupation Safety and Health Administration that is at least ten hours in duration at the time the employee begins work and who shall furnish documentation of successful completion of said course with the first certified payroll report for each employee; and that he will comply fully with all laws and regulations applicable to awards of subcontracts subject to section 44F.

II. CERTIFICATION REGARDING NON-COLLUSION AND DEBARMENT

The undersigned further certifies under penalties of perjury that this subbid is in all responses bona fide, fair and made without collusion or fraud with any other person. As used in this subsection the "person" shall mean any natural person, joint venture, partnership, corporation or other business or legal entity. The undersigned further certifies under penalty of perjury that the said undersigned is not presently debarred from doing public construction work in the Commonwealth under the provisions of section twenty-nine F of chapter twenty-nine, or any other applicable debarment provisions of any other chapter of the General Laws or any rule or regulation promulgated thereunder.

Date _____

_____
Name of Sub-bidder

By _____
Signature

_____
Print Name and Title

_____
Business Name

_____
Street Address, City and State

AGREEMENT

THIS AGREEMENT made as of the _____ day of _____ in the year _____ by and between the City of Quincy, Massachusetts, acting through its Department of Public Works, hereinafter called the "City" and: _____ with legal address and principle place of business at _____ _____ hereinafter called the "Contractor". The City and the Contractor, in consideration of the mutual covenants hereinafter set forth, agree as follows:

ARTICLE 1 WORK

1.1 Contractor shall perform the Work as specified or indicated in the Contract Documents. The Work is as described in Section 011000, Summary of Work.

ARTICLE 2 ENGINEER

2.1 The project design and construction documents have been prepared by EBI Consulting, Inc., 21 B Street, Burlington, MA 01803.

2.2 The City of Quincy Engineer Department, 55 Sea Street, Quincy, Massachusetts in conjunction with a private consultant, to be determined, will act as the Engineer in connection with execution of the project work, in accordance with the Contract Documents.

ARTICLE 3 CONTRACT TIME

3.1 The total Contract Time to complete the project shall be 60 calendar days, commencing ten (10) calendar days following the effective date of this Agreement. No site work shall be allowed between Thanksgiving and March 15, without permission, in writing, from the City.

3.2 The Contractor agrees that the Work shall be prosecuted regularly, diligently, and uninterrupted and at such rate of progress as will insure full completion thereof within the Contract Time stated above. It is expressly understood and agreed, by and between the contractor and the City, that the Contract Time is reasonable for the completion of the Work, taking into consideration the average climatic range and usual business/commercial and industrial activities prevailing in this locality.

ARTICLE 4 CONTRACT PRICE

4.1 The City will pay the contractor for performance of the Work in accordance with the Contract Documents, in current funds at the itemized unit or lump sum prices of work items, a total agreed sum of $_____ (state the total amount in words):

_____

as submitted in the Contractor's Bid Form attached to the Agreement.

ARTICLE 5 APPLICATIONS FOR PAYMENT

5.1 Applications for payment shall be submitted by the Contractor and processed by the Engineer in accordance with the Conditions of the Contract included in the Contract Documents.

ARTICLE 6 PROGRESS AND FINAL PAYMENTS

6.1 The City will make progress payments on account of the Contract Price on the basis of the Contractor's Application for Payment, as recommended by the Engineer, monthly during construction as provided below. All progress payments will be on the basis of the progress of the Work measured by the schedule of values provided for in the Conditions of the Contract.

6.2 The City will make progress and final payments as provided for in the Conditions of the Contract and in accordance with the applicable Massachusetts General Laws.

ARTICLE 7 LIQUIDATED DAMAGES

7.1 The City and the Contractor recognize that time is of the essence for this Agreement and that the City will suffer financial loss if the Work is not completed within the Contract Time specified in Article 3 above, plus any extensions thereof allowed in accordance with Article 12 of the General Conditions. They also recognize the delays, expense and difficulties involved in providing, in a legal or arbitration proceeding, the actual loss suffered by the City if the Work is not completed on time. Accordingly, instead of requiring any such proof, the City and the Contractor agree that as liquidated damages or delay (but not as a penalty) the Contractor shall pay the City $ 1,000.00 per day for each calendar day of delay until the Work is complete.

7.2 Provided, that the Contractor shall not be charged with liquidated damages or any excess cost when the delay in completion of the Work is for reasons included in Article 12 of the General Conditions.

7.3 Provided further, that the Contractor shall furnish the City the required notification of such delays in accordance with the applicable Conditions of the Contract.

ARTICLE 8 ASSURANCE

8.1 The Contractor has familiarized himself with the nature and extent of the Contract Documents, Work, locality, and with all local conditions and Federal, State and local laws, ordinances, rules and regulations that in any manner may affect cost, progress or performance of the Work.

8.2 The Contractor has studied carefully all reports of investigations and tests of sub-surface and latent physical conditions at the site or otherwise affecting cost, progress or performance of the Work which were relied upon by the Engineer in the preparation of

the Drawings and Specifications and which have been identified in the Supplementary Conditions.

8.3 The Contractor has made or caused to be made examinations, investigations and tests and studies of such reports and related data in addition to those referred to in the above paragraph as he deems necessary for the performance of the work at the Contact Price within the Contact Time and in accordance with the other terms and conditions of the Contract Documents; and no additional examinations, investigations, tests, reports or similar data are or will be required by him for such purposes.

8.4 The Contractor has correlated the results of all such observations, examinations, tests, reports and data with the terms and conditions of the Contract Documents.

8.5 The Contractor has given the Engineer written notice of any conflict, error or discrepancy that he has discovered in the Contract Documents and the written resolution thereof by the Engineer is acceptable to the Contractor.

8.6 The Contractor agrees that the Contract Documents are sufficient in scope and detail to indicate and convey understanding of all terms and conditions for performance of the Work.

IN WITNESS WHEREOF, the parties hereto have executed, or caused to be executed, by their duly authorized officials, this Agreement in six (6) copies, each of which shall be deemed an original on the date first above written. The Party of the First Part agrees to pay to the Party of the Second Part, upon satisfactory completion and delivery of the aforementioned, the sum of:

Amount in Figures: $ _____

Amount in Words: _____

_____

WITNESS:

_____

OWNER: The City of Quincy

BY: _____
MAYOR

Approved as to form:

BY: _____
CITY SOLICITOR

BY: _____
COMMISSIONER OF PUBLIC WORKS

BY: _____
PURCHASING AGENT

P.O. # _____

Contract #: _____

The undersigned, in compliance with MGL, Chapter 44, Section 31C, certifies that an appropriation in the amount required for this contract is available.

BY: _____
DIRECTOR OF MUNICIPAL FINANCE

CONTRACTOR:

Company Name: _____

BY: _____

Name: _____

Title: _____

Address: _____

_____

Telephone: _____

Note: This form may be substituted with standard form issued by bonding agency.

PERFORMANCE BOND

KNOW ALL MEN BY THESE PRESENT: that

_____.
(Name of Contractor)

_____.
(Address of Contractor)

a _____, hereinafter called Principal, and
(corporation, partnership, individual)

_____.
(Name of Surety)

_____.
(Address of Surety)

hereinafter called Surety, are held and firmly bound unto _____.

_____.
(Name of Owner)

_____.
(Address of Owner)

hereinafter called OWNER, in the penal sum of: $ _____.

_____.
Dollars

in lawful money of the United States, for the payment of which sum will and truly to be made, we bind ourselves, successors, and assigns, jointly and severally, firmly by these present.

THE CONDITION OF THIS OBLIGATION is such that whereas, the Principal entered into a certain contract with the Owner, dated the ____ day of _____ 20__, a copy of which is hereto attached and made a part hereof for the construction of:

_____.

NOW, THEREFORE, if the Principal shall well, truly and faithfully perform its duties, all the undertakings, covenants, terms, conditions and agreements of said contract during the original term thereof, and any extensions thereof which may be granted by the City, with or without notice to the Surety and during the one year guarantee period, and if he shall satisfy all claims and demands incurred under such contract, and shall fully indemnify and save harmless the City from all costs and damages which it may suffer by reason of failure to do so, and shall reimburse and repay the City all outlay and expense which the City may incur in making good any default, then this obligation shall be void, otherwise to remain in full force and effect.

Note: This form may be substituted with standard form issued by bonding agency.

PROVIDED FURTHER, that said surety for value received hereby stipulates and agrees that no change, extension of time, alteration or addition to the terms of the Contract or to the WORK to be performed thereunder or the SPECIFICATIONS accompanying the same shall in any way affect its obligation on this BOND, and it does hereby waive notice of any such change, extension of time, alteration or addition to the terms of the Contract or to the WORK or to the SPECIFICATIONS.

PROVIDED FURTHER that no final settlement between the OWNER and the CONTRACTOR shall abridge the right of any beneficiary hereunder, whose claim may be unsatisfied.

IN WITNESS WHEREOF, this instrument is executed in ___ counterparts, one of which shall be deemed an original, this the ___ day of _____ 20___.

ATTEST

_____ _____.
Principal's Secretary Principal

[SEAL] BY_____.

_____.
(Address)

_____ _____.
(Witness as to Principal)

_____.
(Address)

_____ _____.
(Surety)

ATTEST:

_____.
(Surety Secretary)

[SEAL]

_____ BY:_____.
(Witness to Surety) (Attorney-In-Fact)

_____ _____.
(Address) (Address)

_____ _____.

NOTE: Date of Bond must not be prior to date of Contract. If Contractor is Partnership, all partners should execute bond.

IMPORTANT: Surety companies executing bonds must appear on the Treasury Department's most current list (Circular 570 as amended) and be authorized to transact business in the State of projects' location.

Note: This form may be substituted with standard form issued by bonding agency.

PAYMENT BOND

KNOW ALL MEN BY THESE PRESENT: that

_____.
(Name of Contractor)

_____.
(Address of Contractor)

a _____, hereinafter called Principal, and
(corporation, partnership, individual)

_____.
(Name of Surety)

_____.
(Address of Surety)

hereinafter called Surety, are held and firmly bound unto _____.

_____.
(Name of Owner)

_____.
(Address of Owner)

hereinafter called OWNER, in the penal sum of: $ _____.

_____.
(Dollars)

in lawful money of the United States, for the payment of which sum will and truly to be made, we bind ourselves, successors, and assigns, jointly and severally, firmly by these present.

THE CONDITION OF THIS OBLIGATION is such that whereas, the Principal entered into a certain contract with the Owner, dated the ____ day of _____ 20___, a copy of which is hereto attached and made a part hereof for the construction of:

_____.

NOW, THEREFORE, if the Principal shall promptly make payment to all persons, firms, subcontractors, and corporations furnishing materials for or performing authorized extension or modification thereof, including all amounts due for materials, lubricants, oil, gasoline, coal and coke, repairs on machinery, equipment and tools, consumed or used in connection with the construction of such WORK, and all insurance premiums on said WORK, and for all labor, performed in such WORK whether by SUBCONTRACTOR or otherwise, then this obligation shall be void, otherwise to remain in full force and effect.

Note: This form may be substituted with standard form issued by bonding agency.

PROVIDED FURTHER, that said surety for value received hereby stipulates and agrees that no change, extension of time, alteration or addition to the terms of the Contract or to the WORK to be performed thereunder or the SPECIFICATIONS accompanying the same shall in any way affect its obligation on this BOND, and it does hereby waive notice of any such change, extension of time, alteration or addition to the terms of the Contract or to the WORK or to the SPECIFICATIONS.

PROVIDED FURTHER that no final settlement between the OWNER and the CONTRACTOR shall abridge the right of any beneficiary hereunder, whose claim may be unsatisfied.

IN WITNESS WHEREOF, this instrument is executed in ___ counterparts, one of which shall be deemed an original, this the ___ day of _____ 20___.

ATTEST

_____ _____.

Principal's Secretary Principal

[SEAL] BY_____.

_____.

(Address)

_____ _____.

(Witness as to Principal)

_____.

(Address)

_____ _____.

(Surety)

ATTEST:

_____.

(Surety Secretary)

[SEAL]

_____ BY:_____.

(Witness to Surety) (Attorney-In-Fact)

_____ _____.

(Address) (Address)

_____ _____.

NOTE: Date of Bond must not be prior to date of Contract. If Contractor is Partnership, all partners should execute bond.

IMPORTANT: Surety companies executing bonds must appear on the Treasury Department's most current list (Circular 570 as amended) and be authorized to transact business in the State of projects' location.

CERTIFICATE OF INSURANCE

This is to certify that the _____ (Company) has issued the policies listed below, that these policies are written in accordance with the Company's standard policies and endorsements, except as indicated below or as noted in the attachments herewith, which policies and endorsements will be made available to ENGINEER and OWNER UPON request, that they provide coverage and limits of liability shown with respect to the insurance indicated that they are in force on this date, that all deductible amounts are indicated below, and that this Certificate is furnish in accordance with and for the purpose of satisfying the requirements of OWNER and ENGINEER in connection with the award and performance of a contract or agreement between_____ _____(OWNER)and

1. Name of Insured_____.
2. Address of Insured _____.
3. Location and Description of Work _____.
_____.

Project Contract No.

					Coverage and Limits of Liability (at least as shown below	
					Bodily Injury Liability	Property Damage Liability
Policy Number	Effective Date	Expiration Date	Each Occurrence	Each Aggregate	Occurrence	Aggregate
A. Owner's Protective Liability has been issued at the expense of Above Insured to_____Owner.						
_____	_____	_____	$1,000,000.	$1,000,000.	$1,000,000.	$1,000,000.
B. Comprehensive General Liability						
_____	_____	_____	$1,000,000.	$1,000,000.	$1,000,000.	$1,000,000.

Including: 1. Operations Premises 2. Contractor's Protective 3.Contractual as Below 4.Products/Completed Operations 5. Personal Injury

Property Damage Ins.under policies A & B above includes Cover. for Explosion/Collapse/Underground Prop. Damage.

C. Auto Liability Including 1. Owner 2. Hired 3. Non-owned			Each Person $1,000,000.00	Each Accident $1,000,000.	Each Accident $1,000,000.00
D. Workmen's Compensation			Compensation Statutory State's Coverage B Limits $1,000,000. if applicable		
E. Builder's Risk Insurance - All Risk Completed Value form			As called for in Contract or Agreement		

CONTRACTUAL LIABILITY

CONTRACTOR shall at all times indemnify and save harmless OWNER, ENGINEER and their respective officers, agents and employees on account of any and all claims, damages, losses, litigation, expenses, counsel fees and compensation arising out of injuries (including death) sustained by or alleged to have been sustained by the officers, agents and employees of said OWNER or ENGINEER or of CONTRACTOR, his subcontractors, or material men, and from injuries (including death sustained by or alleged to have been sustained by the public, any or all persons on or near the Work, or by any other person or property, real or personal (including property of said OWNER or ENGINEER caused in whole or in part by the acts, omissions, or neglect of CONTRACTOR including but not limited to any neglect in safeguarding the work or through the use of unacceptable materials in contracting the Work by CONTRACTOR, any subcontractor, material man, or anyone directly or indirectly employed by them or any of them while engaged in the performance of the contract, including the entire elapsed time from the date ordered to start work or the actual start, whichever occurs first, until completion of the one year correction period, as certified by OWNER or ENGINEER.

Policies A, B, C & D shall remain in effect during the one year correction period.

Such insurancer as is herein certified applies to all operations of the insured in connection with, and necessary and incidental to, the work herein described at the locations stated.

It is hereby understood and agreed that the above policies will not be restricted, suspended, materially changed, nor canceled without 15 days advance notice by registered mail to OWNER and ENGINEER._____.

_____ _____.

Authorized Representative Signature Address

INTENTIONALLY BLANK

NOTICE OF AWARD

TO:

PROJECT TITLE: _Town Brook Open Space Improvement Project _____

The City has considered the Bid submitted by you for the above-described work in response to its Advertisements for Bids and Information for Bidders. You are hereby notified that your Bid in the amount **$ _____** has been accepted, provided you furnish the City with the required Certificates, Affidavits, Contractor's Performance and Payments Bonds and Certificate of Insurance within ten (10) days receipt of this notice to execute the Agreement. In case of failure to execute said Agreement and to furnish said bonds and documents as stipulated in the Bid Documents within ten (10) days from the date of receipt of this Notice, the City will be entitled to consider all your rights arising out of the City's acceptance of your Bid as abandoned and as a forfeiture of your bid bond. The City will also be entitled to such other rights as may be granted by law. You are required to return an acknowledged copy of the Notice of Award to the City.

Dated this the _____ day of_____20___.

BY:_____
Dennis E. Harrington
Director of Planning & Urban Redevelopment

ACCEPTANCE OF NOTICE

Receipt of the above NOTICE OF AWARD is hereby acknowledged by:

_____
(Company Name)

Signature: _____ Date: _____

Print Name: _____ Title: _____

INTENTIONALLY BLANK

INDEMNITY AGREEMENT

In consideration of the award of Contract No._____

by the City of Quincy, hereinafter referred to as INDEMNITEE, to the CONTRACTOR/BIDDER:

_____

hereinafter referred to as INDEMNITOR, and for other good and valuable consideration, said INDEMNITOR agrees to hold INDEMNITEE, City of Quincy, and its various department and employees harmless from any and all liability, loss or damage that INDEMNITEE may suffer as the result of claims, demands, costs, including attorneys fees, or judgement or other actions against it by reason of any and all work done by or on behalf of the INDEMNITOR in connection with the above-referenced contract.

INDEMNITOR,

_____
By Duly Authorized Agent

Date:_____

INTENTIONALLY BLANK

CONTRACTOR'S CERTIFICATION

A Contractor will not be eligible for award of a contract unless he has submitted the following certification, which is deemed a part of the resulting contract.

_____ certifies that:

1. it intends to use the following listed construction trades in the work under the contract:

   _____

2. will comply with the minority manpower ratio and specific affirmative action steps contained herein; and

3. will obtain from each of its subcontractors and submit to the contracting administrating agency prior to the award of any subcontract under this contract the subcontractor certification required by these bid conditions.

_____
Contractor's Signature/Authorized Representative

B. SUBCONTRACTOR'S CERTIFICATION

Prior to the award of any subcontract, regardless of tier, the prospective subcontractor must execute and submit to the Prime Contractor the following certification, which will be deemed a part of the resulting subcontract.

_____ certifies that:

1. it tends to use the following listed construction trades in work under the subcontract:

   _____ ; and

2. will comply with the minority manpower ratio and specific affirmative action steps contained herein.

_____
Subcontractor's Signature

In order to ensure that said subcontractor's certification becomes a part of all subcontracts under the general contract, no subcontract shall be executed until an authorized representative of the state/municipal agency (or agencies) administering this project has determined, in writing, that said certification has been incorporated in such subcontract, regardless of tier. Any subcontract executed without such written approval may been deemed invalid.

INTENTIONALLY BLANK

NOTICE TO PROCEED

TO:_____ DATE:

_____ Project: Town Brook Open Space Improvements

_____

You are hereby notified to commence WORK on or before _____

In accordance with contract documents the contract time is 60 calendar days. The date for completion of all work is therefore _____.

BY:_____

Name: Dennis E. Harrington

Title: Director of Planning and Urban Redevelopment

ACCEPTANCE OF NOTICE

Receipt of the above NOTICE TO PROCEED is hereby acknowledged by:

_____

. (Company Name)

Signature: _____ Date:

Print Name: _____ Title:

INTENTIONALLY BLANK

CITY OF QUINCY
Purchasing Department
1305 Hancock Street, Quincy, MA 02169

Phone: 376-1060

Fax: 376-1074

TAX COMPLIANCE CERTIFICATE
MASS. GENERAL LAWS, CH. 62c, s: 49A(b)

I hereby certify that I have complied with all laws of the Commonwealth of Massachusetts Relating to taxes.

Signed under the pains and penalties of perjury.

(1) Individual Contractor _____
Contractor's Name and Signature)

(2) Corporation, Association or Partnership _____
(Contractor's Name)

Federal Tax ID Number, or Social Security Number _____

By: _____
(Authorized Signature)

Note to Contractor: Please sign at (1) or (2), whichever applies.

1983 Enactment. St. 1983, c. 233, § 35, by § 101 made effective upon passage, was approved July 1, 1983. Emergency declaration by the Governor was filed on the same date.

Library References
Licenses ← 22. S.J.S. Licenses § 34, 38, 39.

§ 48. Liability of lessee for tax due from lessor

The lessee of real estate or tangible personal property of any corporation, company or association subject to taxation under chapter sixty-three shall also be liable for the payment of the tax due from the lessor under chapter sixty-three. Upon such payment, the lessee may, in the absence of an agreement to the contrary, retain it out of the rent of the property, or recover it in an action against the lessor.

Added by St. 1976, c. 415, §22.

1976 Enactment. This section was derived from c. 63, §74.

§ 49. Information for collection of taxes; injunction

Taxes due from a company, association or corporation may be collected by an information brought in the supreme judicial court by the attorney general at the relation of the commissioner. The court may issue an injunction upon such information, restraining the further prosecution of the business of the company, association or corporation until such taxes, with interest and costs thereon, have been paid and until the returns required by this chapter have been filed.

Added by St. 1976, c. 415, §22.

1976 Enactment. This section was derived from c. 63. § 745; c. 64D, § 5.

Cross References

Penalties and forfeitures imposed by chapter 63 or § 74 of this chapter, collection remedies under this section and §47 of this chapter, see c. 63, §80.

§ 49A. Certification of compliance with tax laws as prerequisite to obtaining license or governmental contract

(a) Any person applying to any department, board, commission, division, authority, district or other agency of the commonwealth or any subdivision of the commonwealth, including a city, town or district, for a right or license to conduct a profession, trade or business, or for the renewal of such right or license, shall certify upon such application, under penalties or perjury, that he has complied with all laws of the commonwealth relating to taxes. Such right or license shall not be issued or renewed unless such certification is made.

(b) No contract or other agreement for the purposes of providing goods, services or real estate space to any of the foregoing agencies shall be entered into, renewed or extended with any person unless such person certifies in writing, under penalties of perjury, that he had complied with all laws of the commonwealth relating to taxes.

(c) Any such agency, which has been notified by the commissioner pursuant to section forty-seven A that a person who holds a license or certificate of authority issued by such agency or who has agreed to furnish goods, services or real estate space to such agency has neglected or refused to file any returns or to pay any tax required under this chapter and that such person has not filed in good faith a pending application for abatement of such tax or a pending petition before the appellate tax board contesting such tax, shall refuse to reissue, renew or extend such license, certificate of authority, contract or agreement until the agency receives a certificate issued by the commissioner that the person is in good standing with respect to any and all returns due and taxes payable to the commissioner as of the date of issuance of said certificate, including all returns and taxes referenced in the initial notification.

Added by St. 1983, c. 233, §36. Amended by St. 1986, c. 557, § 72.

1983 Enactment. St. 1983, c. 233, §36, by §101 made effective upon passage, was approved July 1, 1983. Emergency declaration by the Governor was filed on the same date.

1985 Amendment. St. 1985, c. 593, §22, purported to amend par. (c) by substituting "forty-seven A" for "forty-seven" as appearing in line 14 of the 1984 GLM but apparently intended to substitute such amendment where appearing in line 15 of the 1984 GLM.

St. 1985, c. 593, was approved Dec. 18, 1985. Emergency declaration by the Governor was filed on the same date.

St.1986, c. 557, § 213, an emergency act, approved Dec. 8, 1986, repealed St. 1985, c. 593, § 22.

1986 Legislation

St. 1986, c. 557, §72, an emergency act, approved Dec. 8, 1986, in par. (c) substituted "forty-seven A" for "forty-seven" as apparently intended by the 1985 amendment.

Library References Licenses ← 22. C.J. S. Licenses §§ 34, 38, 39.

This document has important legal consequences; consultation with an attorney is encouraged with respect to its use or modification. This document should be adapted to the particular circumstances of the contemplated Project and the Controlling Law.

STANDARD GENERAL CONDITIONS OF THE CONSTRUCTION CONTRACT

Prepared by

ENGINEERS JOINT CONTRACT DOCUMENTS COMMITTEE

and

Issued and Published Jointly By

PROFESSIONAL ENGINEERS IN PRIVATE PRACTICE
a practice division of the
NATIONAL SOCIETY OF PROFESSIONAL ENGINEERS

AMERICAN COUNCIL OF ENGINEERING COMPANIES

AMERICAN SOCIETY OF CIVIL ENGINEERS

This document has been approved and endorsed by

The Associated General Contractors of America

Construction Specifications Institute

EJCDC C-700 Standard General Conditions of the Construction Contract.
Copyright © 2002 National Society of Professional Engineers for EJCDC. All rights reserved.

Copyright ©2002

National Society of Professional Engineers
1420 King Street, Alexandria, VA 22314

American Council of Engineering Companies
1015 15th Street, N.W., Washington, DC 20005

American Society of Civil Engineers
1801 Alexander Bell Drive, Reston, VA 20191-4400

These General Conditions have been prepared for use with the Suggested Forms of Agreement Between Owner and Contractor Nos. C-520 or C-525 (2002 Editions). Their provisions are interrelated and a change in one may necessitate a change in the other. Comments concerning their usage are contained in the EJCDC Construction Documents, General and Instructions (No. C-001) (2002 Edition). For guidance in the preparation of Supplementary Conditions, see Guide to the Preparation of Supplementary Conditions (No. C-800) (2002 Edition).

Copyright © 2002 National Society of Professional Engineers for EJCDC. All rights reserved.

TABLE OF CONTENTS

Page

ARTICLE 1 - DEFINITIONS AND TERMINOLOGY 6
1.01 *Defined Terms* 6
1.02 *Terminology* 8
ARTICLE 2 - PRELIMINARY MATTERS 9
2.01 *Delivery of Bonds and Evidence of Insurance* 9
2.02 *Copies of Documents* 9
2.03 *Commencement of Contract Times; Notice to Proceed* 9
2.04 *Starting the Work* 9
2.05 *Before Starting Construction* 9
2.06 *Preconstruction Conference* 9
2.07 *Initial Acceptance of Schedules* 9
ARTICLE 3 - CONTRACT DOCUMENTS: INTENT, AMENDING, REUSE 10
3.01 *Intent* 10
3.02 *Reference Standards* 10
3.03 *Reporting and Resolving Discrepancies* 10
3.04 *Amending and Supplementing Contract Documents* 11
3.05 *Reuse of Documents* 11
3.06 *Electronic Data* 11
ARTICLE 4 - AVAILABILITY OF LANDS; SUBSURFACE AND PHYSICAL CONDITIONS; HAZARDOUS ENVIRONMENTAL CONDITIONS; REFERENCE POINTS 11
4.01 *Availability of Lands* 11
4.02 *Subsurface and Physical Conditions* 12
4.03 *Differing Subsurface or Physical Conditions* 12
4.04 *Underground Facilities* 13
4.05 *Reference Points* 13
4.06 *Hazardous Environmental Condition at Site* 13
ARTICLE 5 - BONDS AND INSURANCE 14
5.01 *Performance, Payment, and Other Bonds* 14
5.02 *Licensed Sureties and Insurers* 15
5.03 *Certificates of Insurance* 15
5.04 *Contractor's Liability Insurance* 15
5.05 *Owner's Liability Insurance* 16
5.06 *Property Insurance* 16
5.07 *Waiver of Rights* 17
5.08 *Receipt and Application of Insurance Proceeds* 17
5.09 *Acceptance of Bonds and Insurance; Option to Replace* 17
5.10 *Partial Utilization, Acknowledgment of Property Insurer* 18
ARTICLE 6 - CONTRACTOR'S RESPONSIBILITIES 18
6.01 *Supervision and Superintendence* 18
6.02 *Labor; Working Hours* 18
6.03 *Services, Materials, and Equipment* 18
6.04 *Progress Schedule* 18
6.05 *Substitutes and "Or-Equals"* 19
6.06 *Concerning Subcontractors, Suppliers, and Others* 20
6.07 *Patent Fees and Royalties* 21
6.08 *Permits* 21
6.09 *Laws and Regulations* 21
6.10 *Taxes* 22
6.11 *Use of Site and Other Areas* 22
6.12 *Record Documents* 22
6.13 *Safety and Protection* 22
6.14 *Safety Representative* 23
6.15 *Hazard Communication Programs* 23

Copyright © 2002 National Society of Professional Engineers for EJCDC. All rights reserved.

6.16 *Emergencies* 23
6.17 *Shop Drawings and Samples* 23
6.18 *Continuing the Work* 24
6.19 *Contractor's General Warranty and Guarantee* 24
6.20 *Indemnification* 24
6.21 *Delegation of Professional Design Services* 25
ARTICLE 7 - OTHER WORK AT THE SITE 25
7.01 *Related Work at Site* 25
7.02 *Coordination* 26
7.03 *Legal Relationships* 26
ARTICLE 8 - OWNER'S RESPONSIBILITIES 26
8.01 *Communications to Contractor* 26
8.02 *Replacement of Engineer* 26
8.03 *Furnish Data* 26
8.04 *Pay When Due* 26
8.05 *Lands and Easements; Reports and Tests* 26
8.06 *Insurance* 26
8.07 *Change Orders* 26
8.08 *Inspections, Tests, and Approvals* 26
8.09 *Limitations on Owner's Responsibilities* 27
8.10 *Undisclosed Hazardous Environmental Condition* 27
8.11 *Evidence of Financial Arrangements* 27
ARTICLE 9 - ENGINEER'S STATUS DURING CONSTRUCTION 27
9.01 *Owner's Representative* 27
9.02 *Visits to Site* 27
9.03 *Project Representative* 27
9.04 *Authorized Variations in Work* 27
9.05 *Rejecting Defective Work* 27
9.06 *Shop Drawings, Change Orders and Payments* 28
9.07 *Determinations for Unit Price Work* 28
9.08 *Decisions on Requirements of Contract Documents and Acceptability of Work* 28
9.09 *Limitations on Engineer's Authority and Responsibilities* 28
ARTICLE 10 - CHANGES IN THE WORK; CLAIMS 28
10.01 *Authorized Changes in the Work* 28
10.02 *Unauthorized Changes in the Work* 29
10.03 *Execution of Change Orders* 29
10.04 *Notification to Surety* 29
10.05 *Claims* 29
ARTICLE 11 - COST OF THE WORK; ALLOWANCES; UNIT PRICE WORK 30
11.01 *Cost of the Work* 30
11.02 *Allowances* 31
11.03 *Unit Price Work* 31
ARTICLE 12 - CHANGE OF CONTRACT PRICE; CHANGE OF CONTRACT TIMES 32
12.01 *Change of Contract Price* 32
12.02 *Change of Contract Times* 33
12.03 *Delays* 33
ARTICLE 13 - TESTS AND INSPECTIONS; CORRECTION, REMOVAL OR ACCEPTANCE OF DEFECTIVE WORK 33
13.01 *Notice of Defects* 33
13.02 *Access to Work* 33
13.03 *Tests and Inspections* 33
13.04 *Uncovering Work* 34
13.05 *Owner May Stop the Work* 34
13.06 *Correction or Removal of Defective Work* 34
13.07 *Correction Period* 34
13.08 *Acceptance of Defective Work* 35
13.09 *Owner May Correct Defective Work* 35
ARTICLE 14 - PAYMENTS TO CONTRACTOR AND COMPLETION 36
14.01 *Schedule of Values* 36
14.02 *Progress Payments* 36
14.03 *Contractor's Warranty of Title* 37
14.04 *Substantial Completion* 37

Copyright © 2002 National Society of Professional Engineers for EJCDC. All rights reserved.

14.05 *Partial Utilization* 38
14.06 *Final Inspection* 38
14.07 *Final Payment* 38
14.08 *Final Completion Delayed* 39
14.09 *Waiver of Claims* 39
ARTICLE 15 - SUSPENSION OF WORK AND TERMINATION 39
15.01 *Owner May Suspend Work* 39
15.02 *Owner May Terminate for Cause* 39
15.03 *Owner May Terminate For Convenience* 40
15.04 *Contractor May Stop Work or Terminate* 40
ARTICLE 16 - DISPUTE RESOLUTION 41
16.01 *Methods and Procedures* 41
ARTICLE 17 - MISCELLANEOUS 41
17.01 *Giving Notice* 41
17.02 *Computation of Times* 41
17.03 *Cumulative Remedies* 41
17.04 *Survival of Obligations* 41
17.05 *Controlling Law* 41
17.06 *Headings* 41

Copyright © 2002 National Society of Professional Engineers for EJCDC. All rights reserved.

GENERAL CONDITIONS

ARTICLE 1 - DEFINITIONS AND TERMINOLOGY

1.01 *Defined Terms*

A. Wherever used in the Bidding Requirements or Contract Documents and printed with initial capital letters, the terms listed below will have the meanings indicated which are applicable to both the singular and plural thereof. In addition to terms specifically defined, terms with initial capital letters in the Contract Documents include references to identified articles and paragraphs, and the titles of other documents or forms.

1. *Addenda*--Written or graphic instruments issued prior to the opening of Bids which clarify, correct, or change the Bidding Requirements or the proposed Contract Documents.

2. *Agreement*--The written instrument which is evidence of the agreement between Owner and Contractor covering the Work.

3. *Application for Payment*--The form acceptable to Engineer which is to be used by Contractor during the course of the Work in requesting progress or final payments and which is to be accompanied by such supporting documentation as is required by the Contract Documents.

4. *Asbestos*--Any material that contains more than one percent asbestos and is friable or is releasing asbestos fibers into the air above current action levels established by the United States Occupational Safety and Health Administration.

5. *Bid*--The offer or proposal of a Bidder submitted on the prescribed form setting forth the prices for the Work to be performed.

6. *Bidder*--The individual or entity who submits a Bid directly to Owner.

7. *Bidding Documents*--The Bidding Requirements and the proposed Contract Documents (including all Addenda).

8. *Bidding Requirements*--The Advertisement or Invitation to Bid, Instructions to Bidders, bid security of acceptable form, if any, and the Bid Form with any supplements.

9. *Change Order*--A document recommended by Engineer which is signed by Contractor and Owner and authorizes an addition, deletion, or revision in the Work or an adjustment in the Contract Price or the Contract Times, issued on or after the Effective Date of the Agreement.

10. *Claim*--A demand or assertion by Owner or Contractor seeking an adjustment of Contract Price or Contract Times, or both, or other relief with respect to the terms of the Contract. A demand for money or services by a third party is not a Claim.

11. *Contract*--The entire and integrated written agreement between the Owner and Contractor concerning the Work. The Contract supersedes prior negotiations, representations, or agreements, whether written or oral.

12. *Contract Documents*-- Those items so designated in the Agreement. Only printed or hard copies of the items listed in the Agreement are Contract Documents. Approved Shop Drawings, other Contractor's submittals, and the reports and drawings of subsurface and physical conditions are not Contract Documents.

13. *Contract Price*--The moneys payable by Owner to Contractor for completion of the Work in accordance with the Contract Documents as stated in the Agreement (subject to the provisions of Paragraph 11.03 in the case of Unit Price Work).

14. *Contract Times*--The number of days or the dates stated in the Agreement to: (i) achieve Milestones, if any, (ii) achieve Substantial Completion; and (iii) complete the Work so that it is ready for final payment as evidenced by Engineer's written recommendation of final payment.

15. *Contractor*--The individual or entity with whom Owner has entered into the Agreement.

16. *Cost of the Work*--See Paragraph 11.01.A for definition.

17. *Drawings*--That part of the Contract Documents prepared or approved by Engineer which graphically shows the scope, extent, and character of the Work to be performed by Contractor. Shop Drawings and other Contractor submittals are not Drawings as so defined.

18. *Effective Date of the Agreement*--The date indicated in the Agreement on which it becomes effective, but if no such date is indicated, it means the date on which the Agreement is signed and delivered by the last of the two parties to sign and deliver.

19. *Engineer*--The individual or entity named as such in the Agreement.

Copyright © 2002 National Society of Professional Engineers for EJCDC. All rights reserved.

20. *Field Order*--A written order issued by Engineer which requires minor changes in the Work but which does not involve a change in the Contract Price or the Contract Times.

21. *General Requirements*--Sections of Division 1 of the Specifications. The General Requirements pertain to all sections of the Specifications.

22. *Hazardous Environmental Condition*--The presence at the Site of Asbestos, PCBs, Petroleum, Hazardous Waste, or Radioactive Material in such quantities or circumstances that may present a substantial danger to persons or property exposed thereto in connection with the Work.

23. *Hazardous Waste*--The term Hazardous Waste shall have the meaning provided in Section 1004 of the Solid Waste Disposal Act (42 USC Section 6903) as amended from time to time.

24. *Laws and Regulations; Laws or Regulations*--Any and all applicable laws, rules, regulations, ordinances, codes, and orders of any and all governmental bodies, agencies, authorities, and courts having jurisdiction.

25. *Liens*--Charges, security interests, or encumbrances upon Project funds, real property, or personal property.

26. *Milestone*--A principal event specified in the Contract Documents relating to an intermediate completion date or time prior to Substantial Completion of all the Work.

27. *Notice of Award*--The written notice by Owner to the Successful Bidder stating that upon timely compliance by the Successful Bidder with the conditions precedent listed therein, Owner will sign and deliver the Agreement.

28. *Notice to Proceed*--A written notice given by Owner to Contractor fixing the date on which the Contract Times will commence to run and on which Contractor shall start to perform the Work under the Contract Documents.

29. *Owner*--The individual or entity with whom Contractor has entered into the Agreement and for whom the Work is to be performed.

30. *PCBs*--Polychlorinated biphenyls.

31. *Petroleum*--Petroleum, including crude oil or any fraction thereof which is liquid at standard conditions of temperature and pressure (60 degrees Fahrenheit and 14.7 pounds per square inch absolute), such as oil, petroleum, fuel oil, oil sludge, oil refuse, gasoline, kerosene, and oil mixed with other non-Hazardous Waste and crude oils.

32. *Progress Schedule*--A schedule, prepared and maintained by Contractor, describing the sequence and duration of the activities comprising the Contractor's plan to accomplish the Work within the Contract Times.

33. *Project*--The total construction of which the Work to be performed under the Contract Documents may be the whole, or a part.

34. *Project Manual*--The bound documentary information prepared for bidding and constructing the Work. A listing of the contents of the Project Manual, which may be bound in one or more volumes, is contained in the table(s) of contents.

35. *Radioactive Material*--Source, special nuclear, or byproduct material as defined by the Atomic Energy Act of 1954 (42 USC Section 2011 et seq.) as amended from time to time.

36. *Related Entity* -- An officer, director, partner, employee, agent, consultant, or subcontractor.

37. *Resident Project Representative*--The authorized representative of Engineer who may be assigned to the Site or any part thereof.

38. *Samples*--Physical examples of materials, equipment, or workmanship that are representative of some portion of the Work and which establish the standards by which such portion of the Work will be judged.

39. *Schedule of Submittals*--A schedule, prepared and maintained by Contractor, of required submittals and the time requirements to support scheduled performance of related construction activities.

40. *Schedule of Values*--A schedule, prepared and maintained by Contractor, allocating portions of the Contract Price to various portions of the Work and used as the basis for reviewing Contractor's Applications for Payment.

41. *Shop Drawings*--All drawings, diagrams, illustrations, schedules, and other data or information which are specifically prepared or assembled by or for Contractor and submitted by Contractor to illustrate some portion of the Work.

42. *Site*--Lands or areas indicated in the Contract Documents as being furnished by Owner upon which the Work is to be performed, including rights-of-way and easements for access thereto, and such other lands furnished by Owner which are designated for the use of Contractor.

43. *Specifications*--That part of the Contract Documents consisting of written requirements for materials, equipment, systems, standards and workmanship as applied to the Work, and certain

Copyright © 2002 National Society of Professional Engineers for EJCDC. All rights reserved.

administrative requirements and procedural matters applicable thereto.

44. *Subcontractor*--An individual or entity having a direct contract with Contractor or with any other Subcontractor for the performance of a part of the Work at the Site.

45. *Substantial Completion*--The time at which the Work (or a specified part thereof) has progressed to the point where, in the opinion of Engineer, the Work (or a specified part thereof) is sufficiently complete, in accordance with the Contract Documents, so that the Work (or a specified part thereof) can be utilized for the purposes for which it is intended. The terms "substantially complete" and "substantially completed" as applied to all or part of the Work refer to Substantial Completion thereof.

46. *Successful Bidder*--The Bidder submitting a responsive Bid to whom Owner makes an award.

47. *Supplementary Conditions*--That part of the Contract Documents which amends or supplements these General Conditions.

48. *Supplier*--A manufacturer, fabricator, supplier, distributor, materialman, or vendor having a direct contract with Contractor or with any Subcontractor to furnish materials or equipment to be incorporated in the Work by Contractor or any Subcontractor.

49. *Underground Facilities*--All underground pipelines, conduits, ducts, cables, wires, manholes, vaults, tanks, tunnels, or other such facilities or attachments, and any encasements containing such facilities, including those that convey electricity, gases, steam, liquid petroleum products, telephone or other communications, cable television, water, wastewater, storm water, other liquids or chemicals, or traffic or other control systems.

50. *Unit Price Work*--Work to be paid for on the basis of unit prices.

51. *Work*--The entire construction or the various separately identifiable parts thereof required to be provided under the Contract Documents. Work includes and is the result of performing or providing all labor, services, and documentation necessary to produce such construction, and furnishing, installing, and incorporating all materials and equipment into such construction, all as required by the Contract Documents.

52. *Work Change Directive*--A written statement to Contractor issued on or after the Effective Date of the Agreement and signed by Owner and recommended by Engineer ordering an addition, deletion, or revision in the Work, or responding to differing or unforeseen subsurface or physical conditions under which the Work is to be performed or to emergencies. A Work Change Directive will not change the Contract Price or the Contract Times but is evidence that the parties expect that the change ordered or documented by a Work Change Directive will be incorporated in a subsequently issued Change Order following negotiations by the parties as to its effect, if any, on the Contract Price or Contract Times.

1.02 *Terminology*

A. The following words or terms are not defined but, when used in the Bidding Requirements or Contract Documents, have the following meaning.

B. *Intent of Certain Terms or Adjectives*

1. The Contract Documents include the terms "as allowed," "as approved," "as ordered", "as directed" or terms of like effect or import to authorize an exercise of professional judgment by Engineer. In addition, the adjectives "reasonable," "suitable," "acceptable," "proper," "satisfactory," or adjectives of like effect or import are used to describe an action or determination of Engineer as to the Work. It is intended that such exercise of professional judgment, action or determination will be solely to evaluate, in general, the Work for compliance with the requirements of and information in the Contract Documents and conformance with the design concept of the completed Project as a functioning whole as shown or indicated in the Contract Documents (unless there is a specific statement indicating otherwise). The use of any such term or adjective is not intended to and shall not be effective to assign to Engineer any duty or authority to supervise or direct the performance of the Work or any duty or authority to undertake responsibility contrary to the provisions of Paragraph 9.09 or any other provision of the Contract Documents.

C. *Day*

1. The word "day" means a calendar day of 24 hours measured from midnight to the next midnight.

D. *Defective*

1. The word "defective," when modifying the word "Work," refers to Work that is unsatisfactory, faulty, or deficient in that it:

a. does not conform to the Contract Documents, or

b. does not meet the requirements of any applicable inspection, reference standard, test, or approval referred to in the Contract Documents, or

c. has been damaged prior to Engineer's - recommendation of final payment (unless responsibility for the protection thereof has been assumed by Owner at Substantial Completion in accordance with Paragraph 14.04 or 14.05).

Copyright © 2002 National Society of Professional Engineers for EJCDC. All rights reserved.

E. *Furnish, Install, Perform, Provide*

1. The word "furnish," when used in connection with services, materials, or equipment, shall mean to supply and deliver said services, materials, or equipment to the Site (or some other specified location) ready for use or installation and in usable or operable condition.

2. The word "install," when used in connection with services, materials, or equipment, shall mean to put into use or place in final position said services, materials, or equipment complete and ready for intended use.

3. The words "perform" or "provide," when used in connection with services, materials, or equipment, shall mean to furnish and install said services, materials, or equipment complete and ready for intended use.

4. When "furnish," "install," "perform," or "provide" is not used in connection with services, materials, or equipment in a context clearly requiring an obligation of Contractor, "provide" is implied.

F. Unless stated otherwise in the Contract Documents, words or phrases which have a well-known technical or construction industry or trade meaning are used in the Contract Documents in accordance with such recognized meaning.

ARTICLE 2 - PRELIMINARY MATTERS

2.01 *Delivery of Bonds and Evidence of Insurance*

A. When Contractor delivers the executed counterparts of the Agreement to Owner, Contractor shall also deliver to Owner such bonds as Contractor may be required to furnish.

B. *Evidence of Insurance:* Before any Work at the Site is started, Contractor and Owner shall each deliver to the other, with copies to each additional insured identified in the Supplementary Conditions, certificates of insurance (and other evidence of insurance which either of them or any additional insured may reasonably request) which Contractor and Owner respectively are required to purchase and maintain in accordance with Article 5.

2.02 *Copies of Documents*

A. Owner shall furnish to Contractor up to ten printed or hard copies of the Drawings and Project Manual. Additional copies will be furnished upon request at the cost of reproduction.

2.03 *Commencement of Contract Times; Notice to Proceed*

A. The Contract Times will commence to run on the thirtieth day after the Effective Date of the Agreement or, if a Notice to Proceed is given, on the day indicated in the Notice to Proceed. A Notice to Proceed may be given at any time within 30 days after the Effective Date of the Agreement. In no event will the Contract Times commence to run later than the sixtieth day after the day of Bid opening or the thirtieth day after the Effective Date of the Agreement, whichever date is earlier.

2.04 *Starting the Work*

A. Contractor shall start to perform the Work on the date when the Contract Times commence to run. No Work shall be done at the Site prior to the date on which the Contract Times commence to run.

2.05 *Before Starting Construction*

A. *Preliminary Schedules:* Within 10 days after the Effective Date of the Agreement (unless otherwise specified in the General Requirements), Contractor shall submit to Engineer for timely review**:**

1. a preliminary Progress Schedule; indicating the times (numbers of days or dates) for starting and completing the various stages of the Work, including any Milestones specified in the Contract Documents;

2. a preliminary Schedule of Submittals; and

3. a preliminary Schedule of Values for all of the Work which includes quantities and prices of items which when added together equal the Contract Price and subdivides the Work into component parts in sufficient detail to serve as the basis for progress payments during performance of the Work. Such prices will include an appropriate amount of overhead and profit applicable to each item of Work.

2.06 *Preconstruction Conference*

A. Before any Work at the Site is started, a conference attended by Owner, Contractor, Engineer, and others as appropriate will be held to establish a working understanding among the parties as to the Work and to discuss the schedules referred to in Paragraph 2.05.A, procedures for handling Shop Drawings and other submittals, processing Applications for Payment, and maintaining required records.

2.07 *Initial Acceptance of Schedules*

A. At least 10 days before submission of the first Application for Payment a conference attended by Contractor, Engineer, and others as appropriate will be held to review for acceptability to Engineer as provided below the schedules submitted in accordance with Paragraph 2.05.A. Contractor shall have an additional 10 days to make corrections and adjustments and to complete and resubmit the schedules. No progress payment shall be made to Contractor until acceptable schedules are submitted to Engineer.

Copyright © 2002 National Society of Professional Engineers for EJCDC. All rights reserved.

1. The Progress Schedule will be acceptable to Engineer if it provides an orderly progression of the Work to completion within the Contract Times. Such acceptance will not impose on Engineer responsibility for the Progress Schedule, for sequencing, scheduling, or progress of the Work nor interfere with or relieve Contractor from Contractor's full responsibility therefor.

2. Contractor's Schedule of Submittals will be acceptable to Engineer if it provides a workable arrangement for reviewing and processing the required submittals.

3. Contractor's Schedule of Values will be acceptable to Engineer as to form and substance if it provides a reasonable allocation of the Contract Price to component parts of the Work.

ARTICLE 3 - CONTRACT DOCUMENTS: INTENT, AMENDING, REUSE

3.01 *Intent*

A. The Contract Documents are complementary; what is required by one is as binding as if required by all.

B. It is the intent of the Contract Documents to describe a functionally complete Project (or part thereof) to be constructed in accordance with the Contract Documents. Any labor, documentation, services, materials, or equipment that may reasonably be inferred from the Contract Documents or from prevailing custom or trade usage as being required to produce the intended result will be provided whether or not specifically called for at no additional cost to Owner.

C. Clarifications and interpretations of the Contract Documents shall be issued by Engineer as provided in Article 9.

3.02 *Reference Standards*

A. Standards, Specifications, Codes, Laws, and Regulations

1. Reference to standards, specifications, manuals, or codes of any technical society, organization, or association, or to Laws or Regulations, whether such reference be specific or by implication, shall mean the standard, specification, manual, code, or Laws or Regulations in effect at the time of opening of Bids (or on the Effective Date of the Agreement if there were no Bids), except as may be otherwise specifically stated in the Contract Documents.

2. No provision of any such standard, specification, manual or code, or any instruction of a Supplier shall be effective to change the duties or responsibilities of Owner, Contractor, or Engineer, or any of their subcontractors, consultants, agents, or employees from those set forth in the Contract Documents. No such provision or instruction shall be effective to assign to Owner, or Engineer, or any of, their Related Entities, any duty or authority to supervise or direct the performance of the Work or any duty or authority to undertake responsibility inconsistent with the provisions of the Contract Documents.

3.03 *Reporting and Resolving Discrepancies*

A. Reporting Discrepancies

1. *Contractor's Review of Contract Documents Before Starting Work*: Before undertaking each part of the Work, Contractor shall carefully study and compare the Contract Documents and check and verify pertinent figures therein and all applicable field measurements. Contractor shall promptly report in writing to Engineer any conflict, error, ambiguity, or discrepancy which Contractor may discover and shall obtain a written interpretation or clarification from Engineer before proceeding with any Work affected thereby.

2. *Contractor's Review of Contract Documents During Performance of Work*: If, during the performance of the Work, Contractor discovers any conflict, error, ambiguity, or discrepancy within the Contract Documents or between the Contract Documents and any provision of any Law or Regulation applicable to the performance of the Work or of any standard, specification, manual or code, or of any instruction of any Supplier, Contractor shall promptly report it to Engineer in writing. Contractor shall not proceed with the Work affected thereby (except in an emergency as required by Paragraph 6.16.A) until an amendment or supplement to the Contract Documents has been issued by one of the methods indicated in Paragraph 3.04.

3. Contractor shall not be liable to Owner or Engineer for failure to report any conflict, error, ambiguity, or discrepancy in the Contract Documents unless Contractor knew or reasonably should have known thereof.

B. Resolving Discrepancies

1. Except as may be otherwise specifically stated in the Contract Documents, the provisions of the Contract Documents shall take precedence in resolving any conflict, error, ambiguity, or discrepancy between the provisions of the Contract Documents and:

a. the provisions of any standard, specification, manual, code, or instruction (whether or not specifically incorporated by reference in the Contract Documents); or

b. the provisions of any Laws or Regulations applicable to the performance of the Work

Copyright © 2002 National Society of Professional Engineers for EJCDC. All rights reserved.

(unless such an interpretation of the provisions of the Contract Documents would result in violation of such Law or Regulation).

3.04 *Amending and Supplementing Contract Documents*

A. The Contract Documents may be amended to provide for additions, deletions, and revisions in the Work or to modify the terms and conditions thereof by either a Change Order or a Work Change Directive.

B. The requirements of the Contract Documents may be supplemented, and minor variations and deviations in the Work may be authorized, by one or more of the following ways:

1. A Field Order;

2. Engineer's approval of a Shop Drawing or Sample; (Subject to the provisions of Paragraph 6.17.D.3); or

3. Engineer's written interpretation or clarification.

3.05 *Reuse of Documents*

A. Contractor and any Subcontractor or Supplier or other individual or entity performing or furnishing all of the Work under a direct or indirect contract with Contractor, shall not:

1. have or acquire any title to or ownership rights in any of the Drawings, Specifications, or other documents (or copies of any thereof) prepared by or bearing the seal of Engineer or Engineer's consultants, including electronic media editions; or

2. reuse any of such Drawings, Specifications, other documents, or copies thereof on extensions of the Project or any other project without written consent of Owner and Engineer and specific written verification or adaption by Engineer.

B. The prohibition of this Paragraph 3.05 will survive final payment, or termination of the Contract. Nothing herein shall preclude Contractor from retaining copies of the Contract Documents for record purposes.

3.06 *Electronic Data*

A. Copies of data furnished by Owner or Engineer to Contractor or Contractor to Owner or Engineer that may be relied upon are limited to the printed copies (also known as hard copies). Files in electronic media format of text, data, graphics, or other types are furnished only for the convenience of the receiving party. Any conclusion or information obtained or derived from such electronic files will be at the user's sole risk. If there is a discrepancy between the electronic files and the hard copies, the hard copies govern.

B. Because data stored in electronic media format can deteriorate or be modified inadvertently or otherwise without authorization of the data's creator, the party receiving electronic files agrees that it will perform acceptance tests or procedures within 60 days, after which the receiving party shall be deemed to have accepted the data thus transferred. Any errors detected within the 60-day acceptance period will be corrected by the transferring party..

C. When transferring documents in electronic media format, the transferring party makes no representations as to long term compatibility, usability, or readability of documents resulting from the use of software application packages, operating systems, or computer hardware differing from those used by the data's creator.

ARTICLE 4 - AVAILABILITY OF LANDS; SUBSURFACE AND PHYSICAL CONDITIONS; HAZARDOUS ENVIRONMENTAL CONDITIONS; REFERENCE POINTS

4.01 *Availability of Lands*

A. Owner shall furnish the Site. Owner shall notify Contractor of any encumbrances or restrictions not of general application but specifically related to use of the Site with which Contractor must comply in performing the Work. Owner will obtain in a timely manner and pay for easements for permanent structures or permanent changes in existing facilities. If Contractor and Owner are unable to agree on entitlement to or on the amount or extent, if any, of any adjustment in the Contract Price or Contract Times, or both, as a result of any delay in Owner's furnishing the Site or a part thereof, Contractor may make a Claim therefor as provided in Paragraph 10.05.

B. Upon reasonable written request, Owner shall furnish Contractor with a current statement of record legal title and legal description of the lands upon which the Work is to be performed and Owner's interest therein as necessary for giving notice of or filing a mechanic's or construction lien against such lands in accordance with applicable Laws and Regulations.

C. Contractor shall provide for all additional lands and access thereto that may be required for temporary construction facilities or storage of materials and equipment.

Copyright © 2002 National Society of Professional Engineers for EJCDC. All rights reserved.

4.02 *Subsurface and Physical Conditions*

A. *Reports and Drawings:* The Supplementary Conditions identify:

1. those reports of explorations and tests of subsurface conditions at or contiguous to the Site that Engineer has used in preparing the Contract Documents; and

2. those drawings of physical conditions in or relating to existing surface or subsurface structures at or contiguous to the Site (except Underground Facilities) that Engineer has used in preparing the Contract Documents.

B. *Limited Reliance by Contractor on Technical Data Authorized:* Contractor may rely upon the general accuracy of the "technical data" contained in such reports and drawings, but such reports and drawings are not Contract Documents. Such "technical data" is identified in the Supplementary Conditions. Except for such reliance on such "technical data," Contractor may not rely upon or make any claim against Owner or Engineer, or any of their Related Entities with respect to:

1. the completeness of such reports and drawings for Contractor's purposes, including, but not limited to, any aspects of the means, methods, techniques, sequences, and procedures of construction to be employed by Contractor, and safety precautions and programs incident thereto; or

2. other data, interpretations, opinions, and information contained in such reports or shown or indicated in such drawings; or

3. any Contractor interpretation of or conclusion drawn from any "technical data" or any such other data, interpretations, opinions, or information.

4.03 *Differing Subsurface or Physical Conditions*

A. *Notice:* If Contractor believes that any subsurface or physical condition at or contiguous to the Site that is uncovered or revealed either:

1. is of such a nature as to establish that any "technical data" on which Contractor is entitled to rely as provided in Paragraph 4.02 is materially inaccurate; or

2. is of such a nature as to require a change in the Contract Documents; or

3. differs materially from that shown or indicated in the Contract Documents; or

4. is of an unusual nature, and differs materially from conditions ordinarily encountered and generally recognized as inherent in work of the character provided for in the Contract Documents;

then Contractor shall, promptly after becoming aware thereof and before further disturbing the subsurface or physical conditions or performing any Work in connection therewith (except in an emergency as required by Paragraph 6.16.A), notify Owner and Engineer in writing about such condition. Contractor shall not further disturb such condition or perform any Work in connection therewith (except as aforesaid) until receipt of written order to do so.

B. *Engineer's Review*: After receipt of written notice as required by Paragraph 4.03.A, Engineer will promptly review the pertinent condition, determine the necessity of Owner's obtaining additional exploration or tests with respect thereto, and advise Owner in writing (with a copy to Contractor) of Engineer's findings and conclusions.

C. Possible Price and Times Adjustments

1. The Contract Price or the Contract Times, or both, will be equitably adjusted to the extent that the existence of such differing subsurface or physical condition causes an increase or decrease in Contractor's cost of, or time required for, performance of the Work; subject, however, to the following:

a. such condition must meet any one or more of the categories described in Paragraph 4.03.A; and

b. with respect to Work that is paid for on a Unit Price Basis, any adjustment in Contract Price will be subject to the provisions of Paragraphs 9.07 and 11.03.

2. Contractor shall not be entitled to any adjustment in the Contract Price or Contract Times if:

a. Contractor knew of the existence of such conditions at the time Contractor made a final commitment to Owner with respect to Contract Price and Contract Times by the submission of a Bid or becoming bound under a negotiated contract; or

b. the existence of such condition could reasonably have been discovered or revealed as a result of any examination, investigation, exploration, test, or study of the Site and contiguous areas required by the Bidding Requirements or Contract Documents to be conducted by or for Contractor prior to Contractor's making such final commitment; or

Copyright © 2002 National Society of Professional Engineers for EJCDC. All rights reserved.

c. Contractor failed to give the written notice as required by Paragraph 4.03.A.

3. If Owner and Contractor are unable to agree on entitlement to or on the amount or extent, if any, of any adjustment in the Contract Price or Contract Times, or both, a Claim may be made therefor as provided in Paragraph 10.05. However, Owner and Engineer, and any of their Related Entities shall not be liable to Contractor for any claims, costs, losses, or damages (including but not limited to all fees and charges of engineers, architects, attorneys, and other professionals and all court or arbitration or other dispute resolution costs) sustained by Contractor on or in connection with any other project or anticipated project.

4.04 *Underground Facilities*

A. *Shown or Indicated:* The information and data shown or indicated in the Contract Documents with respect to existing Underground Facilities at or contiguous to the Site is based on information and data furnished to Owner or Engineer by the owners of such Underground Facilities, including Owner, or by others. Unless it is otherwise expressly provided in the Supplementary Conditions:

1. Owner and Engineer shall not be responsible for the accuracy or completeness of any such information or data; and

2. the cost of all of the following will be included in the Contract Price, and Contractor shall have full responsibility for:

a. reviewing and checking all such information and data,

b. locating all Underground Facilities shown or indicated in the Contract Documents,

c. coordination of the Work with the owners of such Underground Facilities, including Owner, during construction, and

d. the safety and protection of all such Underground Facilities and repairing any damage thereto resulting from the Work.

B. *Not Shown or Indicated*

1. If an Underground Facility is uncovered or revealed at or contiguous to the Site which was not shown or indicated, or not shown or indicated with reasonable accuracy in the Contract Documents, Contractor shall, promptly after becoming aware thereof and before further disturbing conditions affected thereby or performing any Work in connection therewith (except in an emergency as required by Paragraph 6.16.A), identify the owner of such Underground Facility and give written notice to that owner and to Owner and Engineer. Engineer will promptly review the Underground Facility and determine the extent, if any, to which a change is required in the Contract Documents to reflect and document the consequences of the existence or location of the Underground Facility. During such time, Contractor shall be responsible for the safety and protection of such Underground Facility.

2. If Engineer concludes that a change in the Contract Documents is required, a Work Change Directive or a Change Order will be issued to reflect and document such consequences. An equitable adjustment shall be made in the Contract Price or Contract Times, or both, to the extent that they are attributable to the existence or location of any Underground Facility that was not shown or indicated or not shown or indicated with reasonable accuracy in the Contract Documents and that Contractor did not know of and could not reasonably have been expected to be aware of or to have anticipated. If Owner and Contractor are unable to agree on entitlement to or on the amount or extent, if any, of any such adjustment in Contract Price or Contract Times, Owner or Contractor may make a Claim therefor as provided in Paragraph 10.05.

4.05 *Reference Points*

A. Owner shall provide engineering surveys to establish reference points for construction which in Engineer's judgment are necessary to enable Contractor to proceed with the Work. Contractor shall be responsible for laying out the Work, shall protect and preserve the established reference points and property monuments, and shall make no changes or relocations without the prior written approval of Owner. Contractor shall report to Engineer whenever any reference point or property monument is lost or destroyed or requires relocation because of necessary changes in grades or locations, and shall be responsible for the accurate replacement or relocation of such reference points or property monuments by professionally qualified personnel.

4.06 *Hazardous Environmental Condition at Site*

A. *Reports and Drawings:* Reference is made to the Supplementary Conditions for the identification of those reports and drawings relating to a Hazardous Environmental Condition identified at the Site, if any, that have been utilized by the Engineer in the preparation of the Contract Documents.

B. *Limited Reliance by Contractor on Technical Data Authorized:* Contractor may rely upon the general accuracy of the "technical data" contained in such reports and drawings, but such reports and drawings are not Contract Documents. Such "technical data" is identified in the Supplementary Conditions. Except for such reliance on such "technical data," Contractor may not rely upon or make any claim against Owner or Engineer, or any of their Related Entities with respect to:

Copyright © 2002 National Society of Professional Engineers for EJCDC. All rights reserved.

1. the completeness of such reports and drawings for Contractor's purposes, including, but not limited to, any aspects of the means, methods, techniques, sequences and procedures of construction to be employed by Contractor and safety precautions and programs incident thereto; or

2. other data, interpretations, opinions and information contained in such reports or shown or indicated in such drawings; or

3. any Contractor interpretation of or conclusion drawn from any "technical data" or any such other data, interpretations, opinions or information.

C. Contractor shall not be responsible for any Hazardous Environmental Condition uncovered or revealed at the Site which was not shown or indicated in Drawings or Specifications or identified in the Contract Documents to be within the scope of the Work. Contractor shall be responsible for a Hazardous Environmental Condition created with any materials brought to the Site by Contractor, Subcontractors, Suppliers, or anyone else for whom Contractor is responsible.

D. If Contractor encounters a Hazardous Environmental Condition or if Contractor or anyone for whom Contractor is responsible creates a Hazardous Environmental Condition, Contractor shall immediately: (i) secure or otherwise isolate such condition; (ii) stop all Work in connection with such condition and in any area affected thereby (except in an emergency as required by Paragraph 6.16.A); and (iii) notify Owner and Engineer (and promptly thereafter confirm such notice in writing). Owner shall promptly consult with Engineer concerning the necessity for Owner to retain a qualified expert to evaluate such condition or take corrective action, if any.

E. Contractor shall not be required to resume Work in connection with such condition or in any affected area until after Owner has obtained any required permits related thereto and delivered to Contractor written notice: (i) specifying that such condition and any affected area is or has been rendered safe for the resumption of Work; or (ii) specifying any special conditions under which such Work may be resumed safely. If Owner and Contractor cannot agree as to entitlement to or on the amount or extent, if any, of any adjustment in Contract Price or Contract Times, or both, as a result of such Work stoppage or such special conditions under which Work is agreed to be resumed by Contractor, either party may make a Claim therefor as provided in Paragraph 10.05.

F. If after receipt of such written notice Contractor does not agree to resume such Work based on a reasonable belief it is unsafe, or does not agree to resume such Work under such special conditions, then Owner may order the portion of the Work that is in the area affected by such condition to be deleted from the Work. If Owner and Contractor cannot agree as to entitlement to or on the amount or extent, if any, of an adjustment in Contract Price or Contract Times as a result of deleting such portion of the Work, then either party may make a Claim therefor as provided in Paragraph 10.05. Owner may have such deleted portion of the Work performed by Owner's own forces or others in accordance with Article 7.

G. To the fullest extent permitted by Laws and Regulations, Owner shall indemnify and hold harmless Contractor, Subcontractors, and Engineer, and the officers, directors, partners, employees, agents, consultants, and subcontractors of each and any of them from and against all claims, costs, losses, and damages (including but not limited to all fees and charges of engineers, architects, attorneys, and other professionals and all court or arbitration or other dispute resolution costs) arising out of or relating to a Hazardous Environmental Condition, provided that such Hazardous Environmental Condition: (i) was not shown or indicated in the Drawings or Specifications or identified in the Contract Documents to be included within the scope of the Work, and (ii) was not created by Contractor or by anyone for whom Contractor is responsible. Nothing in this Paragraph 4.06. G shall obligate Owner to indemnify any individual or entity from and against the consequences of that individual's or entity's own negligence.

H. To the fullest extent permitted by Laws and Regulations, Contractor shall indemnify and hold harmless Owner and Engineer, and the officers, directors, partners, employees, agents, consultants, and subcontractors of each and any of them from and against all claims, costs, losses, and damages (including but not limited to all fees and charges of engineers, architects, attorneys, and other professionals and all court or arbitration or other dispute resolution costs) arising out of or relating to a Hazardous Environmental Condition created by Contractor or by anyone for whom Contractor is responsible. Nothing in this Paragraph 4.06.H shall obligate Contractor to indemnify any individual or entity from and against the consequences of that individual's or entity's own negligence.

I. The provisions of Paragraphs 4.02, 4.03, and 4.04 do not apply to a Hazardous Environmental Condition uncovered or revealed at the Site.

ARTICLE 5 - BONDS AND INSURANCE

5.01 *Performance, Payment, and Other Bonds*

A. Contractor shall furnish performance and payment bonds, each in an amount at least equal to the Contract Price as security for the faithful performance and payment of all of Contractor's obligations under the Contract Documents. These bonds shall remain in effect until one year after the date when final payment becomes due or until completion of the correction period specified

Copyright © 2002 National Society of Professional Engineers for EJCDC. All rights reserved.

in Paragraph 13.07, whichever is later, except as provided otherwise by Laws or Regulations or by the Contract Documents. Contractor shall also furnish such other bonds as are required by the Contract Documents.

B. All bonds shall be in the form prescribed by the Contract Documents except as provided otherwise by Laws or Regulations, and shall be executed by such sureties as are named in the current list of "Companies Holding Certificates of Authority as Acceptable Sureties on Federal Bonds and as Acceptable Reinsuring Companies" as published in Circular 570 (amended) by the Financial Management Service, Surety Bond Branch, U.S. Department of the Treasury. All bonds signed by an agent must be accompanied by a certified copy of the agent's authority to act.

C. If the surety on any bond furnished by Contractor is declared bankrupt or becomes insolvent or its right to do business is terminated in any state where any part of the Project is located or it ceases to meet the requirements of Paragraph 5.01.B, Contractor shall promptly notify Owner and Engineer and shall, within 20 days after the event giving rise to such notification, provide another bond and surety, both of which shall comply with the requirements of Paragraphs 5.01.B and 5.02.

5.02 *Licensed Sureties and Insurers*

A. All bonds and insurance required by the Contract Documents to be purchased and maintained by Owner or Contractor shall be obtained from surety or insurance companies that are duly licensed or authorized in the jurisdiction in which the Project is located to issue bonds or insurance policies for the limits and coverages so required. Such surety and insurance companies shall also meet such additional requirements and qualifications as may be provided in the Supplementary Conditions.

5.03 *Certificates of Insurance*

A. Contractor shall deliver to Owner, with copies to each additional insured identified in the Supplementary Conditions, certificates of insurance (and other evidence of insurance requested by Owner or any other additional insured) which Contractor is required to purchase and maintain.

B. Owner shall deliver to Contractor, with copies to each additional insured identified in the Supplementary Conditions, certificates of insurance (and other evidence of insurance requested by Contractor or any other additional insured) which Owner is required to purchase and maintain.

5.04 *Contractor's Liability Insurance*

A. Contractor shall purchase and maintain such liability and other insurance as is appropriate for the Work being performed and as will provide protection from claims set forth below which may arise out of or result from Contractor's performance of the Work and Contractor's other obligations under the Contract Documents, whether it is to be performed by Contractor, any Subcontractor or Supplier, or by anyone directly or indirectly employed by any of them to perform any of the Work, or by anyone for whose acts any of them may be liable:

1. claims under workers' compensation, disability benefits, and other similar employee benefit acts;

2. claims for damages because of bodily injury, occupational sickness or disease, or death of Contractor's employees;

3. claims for damages because of bodily injury, sickness or disease, or death of any person other than Contractor's employees;

4. claims for damages insured by reasonably available personal injury liability coverage which are sustained:

a. by any person as a result of an offense directly or indirectly related to the employment of such person by Contractor, or

b. by any other person for any other reason;

5. claims for damages, other than to the Work itself, because of injury to or destruction of tangible property wherever located, including loss of use resulting therefrom; and

6. claims for damages because of bodily injury or death of any person or property damage arising out of the ownership, maintenance or use of any motor vehicle.

B. The policies of insurance required by this Paragraph 5.04 shall:

1. with respect to insurance required by Paragraphs 5.04.A.3 through 5.04.A.6 inclusive, include as additional insured (subject to any customary exclusion regarding professional liability) Owner and Engineer, and any other individuals or entities identified in the Supplementary Conditions, all of whom shall be listed as additional insureds, and include coverage for the respective officers, directors, partners, employees, agents, consultants and subcontractors of each and any of all such additional insureds, and the insurance afforded to these additional insureds shall provide primary coverage for all claims covered thereby;

2. include at least the specific coverages and be written for not less than the limits of liability provided in the Supplementary Conditions or required by Laws or Regulations, whichever is greater;

Copyright © 2002 National Society of Professional Engineers for EJCDC. All rights reserved.

3. include completed operations insurance;

4. include contractual liability insurance covering Contractor's indemnity obligations under Paragraphs 6.11 and 6.20;

5. contain a provision or endorsement that the coverage afforded will not be canceled, materially changed or renewal refused until at least 30 days prior written notice has been given to Owner and Contractor and to each other additional insured identified in the Supplementary Conditions to whom a certificate of insurance has been issued (and the certificates of insurance furnished by the Contractor pursuant to Paragraph 5.03 will so provide);

6. remain in effect at least until final payment and at all times thereafter when Contractor may be correcting, removing, or replacing defective Work in accordance with Paragraph 13.07; and

7. with respect to completed operations insurance, and any insurance coverage written on a claims-made basis, remain in effect for at least two years after final payment.

a. Contractor shall furnish Owner and each other additional insured identified in the Supplementary Conditions, to whom a certificate of insurance has been issued, evidence satisfactory to Owner and any such additional insured of continuation of such insurance at final payment and one year thereafter.

5.05 *Owner's Liability Insurance*

A. In addition to the insurance required to be provided by Contractor under Paragraph 5.04, Owner, at Owner's option, may purchase and maintain at Owner's expense Owner's own liability insurance as will protect Owner against claims which may arise from operations under the Contract Documents.

5.06 *Property Insurance*

A. Unless otherwise provided in the Supplementary Conditions, Owner shall purchase and maintain property insurance upon the Work at the Site in the amount of the full replacement cost thereof (subject to such deductible amounts as may be provided in the Supplementary Conditions or required by Laws and Regulations). This insurance shall:

1. include the interests of Owner, Contractor, Subcontractors, and Engineer, and any other individuals or entities identified in the Supplementary Conditions, and the officers, directors, partners, employees, agents, consultants and subcontractors of each and any of them, each of whom is deemed to have an insurable interest and shall be listed as an insured or additional insured;

2. be written on a Builder's Risk "all-risk" or open peril or special causes of loss policy form that shall at least include insurance for physical loss or damage to the Work, temporary buildings, false work, and materials and equipment in transit, and shall insure against at least the following perils or causes of loss: fire, lightning, extended coverage, theft, vandalism and malicious mischief, earthquake, collapse, debris removal, demolition occasioned by enforcement of Laws and Regulations, water damage, (other than caused by flood) and such other perils or causes of loss as may be specifically required by the Supplementary Conditions;

3. include expenses incurred in the repair or replacement of any insured property (including but not limited to fees and charges of engineers and architects);

4. cover materials and equipment stored at the Site or at another location that was agreed to in writing by Owner prior to being incorporated in the Work, provided that such materials and equipment have been included in an Application for Payment recommended by Engineer;

5. allow for partial utilization of the Work by Owner;

6. include testing and startup; and

7. be maintained in effect until final payment is made unless otherwise agreed to in writing by Owner, Contractor, and Engineer with 30 days written notice to each other additional insured to whom a certificate of insurance has been issued.

B. Owner shall purchase and maintain such boiler and machinery insurance or additional property insurance as may be required by the Supplementary Conditions or Laws and Regulations which will include the interests of Owner, Contractor, Subcontractors, and Engineer, and any other individuals or entities identified in the Supplementary Conditions, and the officers, directors, partners, employees, agents, consultants and subcontractors of each and any of them, each of whom is deemed to have an insurable interest and shall be listed as an insured or additional insured.

C. All the policies of insurance (and the certificates or other evidence thereof) required to be purchased and maintained in accordance with Paragraph 5.06 will contain a provision or endorsement that the coverage afforded will not be canceled or materially changed or renewal refused until at least 30 days prior written notice has been given to Owner and Contractor and to each other additional insured to whom a certificate of insurance has been issued and will contain waiver provisions in accordance with Paragraph 5.07.

D. Owner shall not be responsible for purchasing and maintaining any property insurance specified in this Paragraph 5.06 to protect the interests of Contractor, Subcontractors, or others in the Work to the extent of any

Copyright © 2002 National Society of Professional Engineers for EJCDC. All rights reserved.

deductible amounts that are identified in the Supplementary Conditions. The risk of loss within such identified deductible amount will be borne by Contractor, Subcontractors, or others suffering any such loss, and if any of them wishes property insurance coverage within the limits of such amounts, each may purchase and maintain it at the purchaser's own expense.

E. If Contractor requests in writing that other special insurance be included in the property insurance policies provided under Paragraph 5.06, Owner shall, if possible, include such insurance, and the cost thereof will be charged to Contractor by appropriate Change Order. Prior to commencement of the Work at the Site, Owner shall in writing advise Contractor whether or not such other insurance has been procured by Owner.

5.07 *Waiver of Rights*

A. Owner and Contractor intend that all policies purchased in accordance with Paragraph 5.06 will protect Owner, Contractor, Subcontractors, and Engineer, and all other individuals or entities identified in the Supplementary Conditions to be listed as insureds or additional insureds (and the officers, directors, partners, employees, agents, consultants and subcontractors of each and any of them) in such policies and will provide primary coverage for all losses and damages caused by the perils or causes of loss covered thereby. All such policies shall contain provisions to the effect that in the event of payment of any loss or damage the insurers will have no rights of recovery against any of the insureds or additional insureds thereunder. Owner and Contractor waive all rights against each other and their respective officers, directors, partners, employees, agents, consultants and subcontractors of each and any of them for all losses and damages caused by, arising out of or resulting from any of the perils or causes of loss covered by such policies and any other property insurance applicable to the Work; and, in addition, waive all such rights against Subcontractors, and Engineer, and all other individuals or entities identified in the Supplementary Conditions to be listed as insured or additional insured (and the officers, directors, partners, employees, agents, consultants and subcontractors of each and any of them) under such policies for losses and damages so caused. None of the above waivers shall extend to the rights that any party making such waiver may have to the proceeds of insurance held by Owner as trustee or otherwise payable under any policy so issued.

B. Owner waives all rights against Contractor, Subcontractors, and Engineer, and the officers, directors, partners, employees, agents, consultants and subcontractors of each and any of them for:

1. loss due to business interruption, loss of use, or other consequential loss extending beyond direct physical loss or damage to Owner's property or the Work caused by, arising out of, or resulting from fire or other perils whether or not insured by Owner; and

2. loss or damage to the completed Project or part thereof caused by, arising out of, or resulting from fire or other insured peril or cause of loss covered by any property insurance maintained on the completed Project or part thereof by Owner during partial utilization pursuant to Paragraph 14.05, after Substantial Completion pursuant to Paragraph 14.04, or after final payment pursuant to Paragraph 14.07.

C. Any insurance policy maintained by Owner covering any loss, damage or consequential loss referred to in Paragraph 5.07.B shall contain provisions to the effect that in the event of payment of any such loss, damage, or consequential loss, the insurers will have no rights of recovery against Contractor, Subcontractors, or Engineer, and the officers, directors, partners, employees, agents, consultants and subcontractors of each and any of them.

5.08 *Receipt and Application of Insurance Proceeds*

A. Any insured loss under the policies of insurance required by Paragraph 5.06 will be adjusted with Owner and made payable to Owner as fiduciary for the insureds, as their interests may appear, subject to the requirements of any applicable mortgage clause and of Paragraph 5.08.B. Owner shall deposit in a separate account any money so received and shall distribute it in accordance with such agreement as the parties in interest may reach. If no other special agreement is reached, the damaged Work shall be repaired or replaced, the moneys so received applied on account thereof, and the Work and the cost thereof covered by an appropriate Change Order .

B. Owner as fiduciary shall have power to adjust and settle any loss with the insurers unless one of the parties in interest shall object in writing within 15 days after the occurrence of loss to Owner's exercise of this power. If such objection be made, Owner as fiduciary shall make settlement with the insurers in accordance with such agreement as the parties in interest may reach. If no such agreement among the parties in interest is reached, Owner as fiduciary shall adjust and settle the loss with the insurers and, if required in writing by any party in interest, Owner as fiduciary shall give bond for the proper performance of such duties.

5.09 *Acceptance of Bonds and Insurance; Option to Replace*

A. If either Owner or Contractor has any objection to the coverage afforded by or other provisions of the bonds or insurance required to be purchased and maintained by the other party in accordance with Article 5 on the basis of non-conformance with the Contract

Copyright © 2002 National Society of Professional Engineers for EJCDC. All rights reserved.

Documents, the objecting party shall so notify the other party in writing within 10 days after receipt of the certificates (or other evidence requested) required by Paragraph 2.01.B. Owner and Contractor shall each provide to the other such additional information in respect of insurance provided as the other may reasonably request. If either party does not purchase or maintain all of the bonds and insurance required of such party by the Contract Documents, such party shall notify the other party in writing of such failure to purchase prior to the start of the Work, or of such failure to maintain prior to any change in the required coverage. Without prejudice to any other right or remedy, the other party may elect to obtain equivalent bonds or insurance to protect such other party's interests at the expense of the party who was required to provide such coverage, and a Change Order shall be issued to adjust the Contract Price accordingly.

5.10 *Partial Utilization, Acknowledgment of Property Insurer*

A. If Owner finds it necessary to occupy or use a portion or portions of the Work prior to Substantial Completion of all the Work as provided in Paragraph 14.05, no such use or occupancy shall commence before the insurers providing the property insurance pursuant to Paragraph 5.06 have acknowledged notice thereof and in writing effected any changes in coverage necessitated thereby. The insurers providing the property insurance shall consent by endorsement on the policy or policies, but the property insurance shall not be canceled or permitted to lapse on account of any such partial use or occupancy.

ARTICLE 6 - CONTRACTOR'S RESPONSIBILITIES

6.01 *Supervision and Superintendence*

A. Contractor shall supervise, inspect, and direct the Work competently and efficiently, devoting such attention thereto and applying such skills and expertise as may be necessary to perform the Work in accordance with the Contract Documents. Contractor shall be solely responsible for the means, methods, techniques, sequences, and procedures of construction. Contractor shall not be responsible for the negligence of Owner or Engineer in the design or specification of a specific means, method, technique, sequence, or procedure of construction which is shown or indicated in and expressly required by the Contract Documents.

B. At all times during the progress of the Work, Contractor shall assign a competent resident superintendent who shall not be replaced without written notice to Owner and Engineer except under extraordinary circumstances. The superintendent will be Contractor's representative at the Site and shall have authority to act on behalf of Contractor. All communications given to or received from the superintendent shall be binding on Contractor.

6.02 *Labor; Working Hours*

A. Contractor shall provide competent, suitably qualified personnel to survey and lay out the Work and perform construction as required by the Contract Documents. Contractor shall at all times maintain good discipline and order at the Site.

B. Except as otherwise required for the safety or protection of persons or the Work or property at the Site or adjacent thereto, and except as otherwise stated in the Contract Documents, all Work at the Site shall be performed during regular working hours. Contractor will not permit the performance of Work on a Saturday, Sunday, or any legal holiday without Owner's written consent (which will not be unreasonably withheld) given after prior written notice to Engineer.

6.03 *Services, Materials, and Equipment*

A. Unless otherwise specified in the Contract Documents, Contractor shall provide and assume full responsibility for all services, materials, equipment, labor, transportation, construction equipment and machinery, tools, appliances, fuel, power, light, heat, telephone, water, sanitary facilities, temporary facilities, and all other facilities and incidentals necessary for the performance, testing, start-up, and completion of the Work.

B. All materials and equipment incorporated into the Work shall be as specified or, if not specified, shall be of good quality and new, except as otherwise provided in the Contract Documents. All special warranties and guarantees required by the Specifications shall expressly run to the benefit of Owner. If required by Engineer, Contractor shall furnish satisfactory evidence (including reports of required tests) as to the source, kind, and quality of materials and equipment.

C. All materials and equipment shall be stored, applied, installed, connected, erected, protected, used, cleaned, and conditioned in accordance with instructions of the applicable Supplier, except as otherwise may be provided in the Contract Documents.

6.04 *Progress Schedule*

A. Contractor shall adhere to the Progress Schedule established in accordance with Paragraph 2.07 as it may be adjusted from time to time as provided below.

Copyright © 2002 National Society of Professional Engineers for EJCDC. All rights reserved.

1. Contractor shall submit to Engineer for acceptance (to the extent indicated in Paragraph 2.07) proposed adjustments in the Progress Schedule that will not result in changing the Contract Times. Such adjustments will comply with any provisions of the General Requirements applicable thereto.

2. Proposed adjustments in the Progress Schedule that will change the Contract Times shall be submitted in accordance with the requirements of Article 12. Adjustments in Contract Times may only be made by a Change Order.

6.05 *Substitutes and "Or-Equals"*

A. Whenever an item of material or equipment is specified or described in the Contract Documents by using the name of a proprietary item or the name of a particular Supplier, the specification or description is intended to establish the type, function, appearance, and quality required. Unless the specification or description contains or is followed by words reading that no like, equivalent, or "or-equal" item or no substitution is permitted, other items of material or equipment or material or equipment of other Suppliers may be submitted to Engineer for review under the circumstances described below.

1. *"Or-Equal" Items:* If in Engineer's sole discretion an item of material or equipment proposed by Contractor is functionally equal to that named and sufficiently similar so that no change in related Work will be required, it may be considered by Engineer as an "or-equal" item, in which case review and approval of the proposed item may, in Engineer's sole discretion, be accomplished without compliance with some or all of the requirements for approval of proposed substitute items. For the purposes of this Paragraph 6.05.A.1, a proposed item of material or equipment will be considered functionally equal to an item so named if:

a. in the exercise of reasonable judgment Engineer determines that:

1) it is at least equal in materials of construction, quality, durability, appearance, strength, and design characteristics;

2) it will reliably perform at least equally well the function and achieve the results imposed by the design concept of the completed Project as a functioning whole,

3) it has a proven record of performance and availability of responsive service; and

b. Contractor certifies that, if approved and incorporated into the Work:

1) there will be no increase in cost to the Owner or increase in Contract Times, and

2) it will conform substantially to the detailed requirements of the item named in the Contract Documents.

2. Substitute Items

a. If in Engineer's sole discretion an item of material or equipment proposed by Contractor does not qualify as an "or-equal" item under Paragraph 6.05.A.1, it will be considered a proposed substitute item.

b. Contractor shall submit sufficient information as provided below to allow Engineer to determine that the item of material or equipment proposed is essentially equivalent to that named and an acceptable substitute therefor. Requests for review of proposed substitute items of material or equipment will not be accepted by Engineer from anyone other than Contractor.

c. The requirements for review by Engineer will be as set forth in Paragraph 6.05.A.2.d, as supplemented in the General Requirements and as Engineer may decide is appropriate under the circumstances.

d. Contractor shall make written application to Engineer for review of a proposed substitute item of material or equipment that Contractor seeks to furnish or use. The application:

1) shall certify that the proposed substitute item will:

a) perform adequately the functions and achieve the results called for by the general design,

b) be similar in substance to that specified, and

c) be suited to the same use as that specified;

2) will state:

a) the extent, if any, to which the use of the proposed substitute item will prejudice Contractor's achievement of Substantial Completion on time;

b) whether or not use of the proposed substitute item in the Work will require a change in any of the Contract Documents (or in the provisions of any other direct contract with Owner for other work on the Project) to adapt the design to the proposed substitute item; and

Copyright © 2002 National Society of Professional Engineers for EJCDC. All rights reserved.

c) whether or not incorporation or use of the proposed substitute item in connection with the Work is subject to payment of any license fee or royalty;

3) will identify:

a) all variations of the proposed substitute item from that specified , and

b) available engineering, sales, maintenance, repair, and replacement services;

4) and shall contain an itemized estimate of all costs or credits that will result directly or indirectly from use of such substitute item, including costs of redesign and claims of other contractors affected by any resulting change,

B. *Substitute Construction Methods or Procedures:* If a specific means, method, technique, sequence, or procedure of construction is expressly required by the Contract Documents, Contractor may furnish or utilize a substitute means, method, technique, sequence, or procedure of construction approved by Engineer. Contractor shall submit sufficient information to allow Engineer, in Engineer's sole discretion, to determine that the substitute proposed is equivalent to that expressly called for by the Contract Documents. The requirements for review by Engineer will be similar to those provided in Paragraph 6.05.A.2.

C. *Engineer's Evaluation:* Engineer will be allowed a reasonable time within which to evaluate each proposal or submittal made pursuant to Paragraphs 6.05.A and 6.05.B. Engineer may require Contractor to furnish additional data about the proposed substitute item. Engineer will be the sole judge of acceptability. No "or equal" or substitute will be ordered, installed or utilized until Engineer's review is complete, which will be evidenced by either a Change Order for a substitute or an approved Shop Drawing for an "or equal." Engineer will advise Contractor in writing of any negative determination.

D. *Special Guarantee:* Owner may require Contractor to furnish at Contractor's expense a special performance guarantee or other surety with respect to any substitute.

E. *Engineer's Cost Reimbursement*: Engineer will record Engineer's costs in evaluating a substitute proposed or submitted by Contractor pursuant to Paragraphs 6.05.A.2 and 6.05.B Whether or not Engineer approves a substitute item so proposed or submitted by Contractor, Contractor shall reimburse Owner for the charges of Engineer for evaluating each such proposed substitute. Contractor shall also reimburse Owner for the charges of Engineer for making changes in the Contract Documents (or in the provisions of any other direct contract with Owner) resulting from the acceptance of each proposed substitute.

F. *Contractor's Expense*: Contractor shall provide all data in support of any proposed substitute or "or-equal" at Contractor's expense.

6.06 *Concerning Subcontractors, Suppliers, and Others*

A. Contractor shall not employ any Subcontractor, Supplier, or other individual or entity (including those acceptable to Owner as indicated in Paragraph 6.06.B), whether initially or as a replacement, against whom Owner may have reasonable objection. Contractor shall not be required to employ any Subcontractor, Supplier, or other individual or entity to furnish or perform any of the Work against whom Contractor has reasonable objection.

B. If the Supplementary Conditions require the identity of certain Subcontractors, Suppliers, or other individuals or entities to be submitted to Owner in advance for acceptance by Owner by a specified date prior to the Effective Date of the Agreement, and if Contractor has submitted a list thereof in accordance with the Supplementary Conditions, Owner's acceptance (either in writing or by failing to make written objection thereto by the date indicated for acceptance or objection in the Bidding Documents or the Contract Documents) of any such Subcontractor, Supplier, or other individual or entity so identified may be revoked on the basis of reasonable objection after due investigation. Contractor shall submit an acceptable replacement for the rejected Subcontractor, Supplier, or other individual or entity, and the Contract Price will be adjusted by the difference in the cost occasioned by such replacement, and an appropriate Change Order will be issued . No acceptance by Owner of any such Subcontractor, Supplier, or other individual or entity, whether initially or as a replacement, shall constitute a waiver of any right of Owner or Engineer to reject defective Work.

C. Contractor shall be fully responsible to Owner and Engineer for all acts and omissions of the Subcontractors, Suppliers, and other individuals or entities performing or furnishing any of the Work just as Contractor is responsible for Contractor's own acts and omissions. Nothing in the Contract Documents:

1. shall create for the benefit of any such Subcontractor, Supplier, or other individual or entity any contractual relationship between Owner or Engineer and any such Subcontractor, Supplier or other individual or entity, nor

2. shall anything in the Contract Documents create any obligation on the part of Owner or Engineer to pay or to see to the payment of any moneys due any such Subcontractor, Supplier, or other individual

Copyright © 2002 National Society of Professional Engineers for EJCDC. All rights reserved.

or entity except as may otherwise be required by Laws and Regulations.

D. Contractor shall be solely responsible for scheduling and coordinating the Work of Subcontractors, Suppliers, and other individuals or entities performing or furnishing any of the Work under a direct or indirect contract with Contractor.

E. Contractor shall require all Subcontractors, Suppliers, and such other individuals or entities performing or furnishing any of the Work to communicate with Engineer through Contractor.

F. The divisions and sections of the Specifications and the identifications of any Drawings shall not control Contractor in dividing the Work among Subcontractors or Suppliers or delineating the Work to be performed by any specific trade.

G. All Work performed for Contractor by a Subcontractor or Supplier will be pursuant to an appropriate agreement between Contractor and the Subcontractor or Supplier which specifically binds the Subcontractor or Supplier to the applicable terms and conditions of the Contract Documents for the benefit of Owner and Engineer. Whenever any such agreement is with a Subcontractor or Supplier who is listed as an additional insured on the property insurance provided in Paragraph 5.06, the agreement between the Contractor and the Subcontractor or Supplier will contain provisions whereby the Subcontractor or Supplier waives all rights against Owner, Contractor, and Engineer,, and all other individuals or entities identified in the Supplementary Conditions to be listed as insureds or additional insureds (and the officers, directors, partners, employees, agents, consultants and subcontractors of each and any of them) for all losses and damages caused by, arising out of, relating to, or resulting from any of the perils or causes of loss covered by such policies and any other property insurance applicable to the Work. If the insurers on any such policies require separate waiver forms to be signed by any Subcontractor or Supplier, Contractor will obtain the same.

6.07 *Patent Fees and Royalties*

A. Contractor shall pay all license fees and royalties and assume all costs incident to the use in the performance of the Work or the incorporation in the Work of any invention, design, process, product, or device which is the subject of patent rights or copyrights held by others. If a particular invention, design, process, product, or device is specified in the Contract Documents for use in the performance of the Work and if to the actual knowledge of Owner or Engineer its use is subject to patent rights or copyrights calling for the payment of any license fee or royalty to others, the existence of such rights shall be disclosed by Owner in the Contract Documents.

B. To the fullest extent permitted by Laws and Regulations, Contractor shall indemnify and hold harmless Owner and Engineer, and the officers, directors, partners, employees, agents, consultants and subcontractors of each and any of them from and against all claims, costs, losses, and damages (including but not limited to all fees and charges of engineers, architects, attorneys, and other professionals and all court or arbitration or other dispute resolution costs) arising out of or relating to any infringement of patent rights or copyrights incident to the use in the performance of the Work or resulting from the incorporation in the Work of any invention, design, process, product, or device not specified in the Contract Documents.

6.08 *Permits*

A. Unless otherwise provided in the Supplementary Conditions, Contractor shall obtain and pay for all construction permits and licenses. Owner shall assist Contractor, when necessary, in obtaining such permits and licenses. Contractor shall pay all governmental charges and inspection fees necessary for the prosecution of the Work which are applicable at the time of opening of Bids, or, if there are no Bids, on the Effective Date of the Agreement. Owner shall pay all charges of utility owners for connections for providing permanent service to the Work.

6.09 *Laws and Regulations*

A. Contractor shall give all notices required by and shall comply with all Laws and Regulations applicable to the performance of the Work. Except where otherwise expressly required by applicable Laws and Regulations, neither Owner nor Engineer shall be responsible for monitoring Contractor's compliance with any Laws or Regulations.

B. If Contractor performs any Work knowing or having reason to know that it is contrary to Laws or Regulations, Contractor shall bear all claims, costs, losses, and damages (including but not limited to all fees and charges of engineers, architects, attorneys, and other professionals and all court or arbitration or other dispute resolution costs) arising out of or relating to such Work. However, it shall not be Contractor's primary responsibility to make certain that the Specifications and Drawings are in accordance with Laws and Regulations, but this shall not relieve Contractor of Contractor's obligations under Paragraph 3.03.

C. Changes in Laws or Regulations not known at the time of opening of Bids (or, on the Effective Date of the Agreement if there were no Bids) having an effect on the cost or time of performance of the Work shall be the subject of an adjustment in Contract Price or Contract Times. If Owner and Contractor are unable to agree on entitlement to or on the amount or extent, if any, of any such adjustment, a Claim may be made therefor as provided in Paragraph 10.05.

Copyright © 2002 National Society of Professional Engineers for EJCDC. All rights reserved.

6.10 *Taxes*

A. Contractor shall pay all sales, consumer, use, and other similar taxes required to be paid by Contractor in accordance with the Laws and Regulations of the place of the Project which are applicable during the performance of the Work.

6.11 *Use of Site and Other Areas*

A. Limitation on Use of Site and Other Areas

1. Contractor shall confine construction equipment, the storage of materials and equipment, and the operations of workers to the Site and other areas permitted by Laws and Regulations, and shall not unreasonably encumber the Site and other areas with construction equipment or other materials or equipment. Contractor shall assume full responsibility for any damage to any such land or area, or to the owner or occupant thereof, or of any adjacent land or areas resulting from the performance of the Work.

2. Should any claim be made by any such owner or occupant because of the performance of the Work, Contractor shall promptly settle with such other party by negotiation or otherwise resolve the claim by arbitration or other dispute resolution proceeding or at law.

3. To the fullest extent permitted by Laws and Regulations, Contractor shall indemnify and hold harmless Owner and Engineer, and the officers, directors, partners, employees, agents, consultants and subcontractors of each and any of them from and against all claims, costs, losses, and damages (including but not limited to all fees and charges of engineers, architects, attorneys, and other professionals and all court or arbitration or other dispute resolution costs) arising out of or relating to any claim or action, legal or equitable, brought by any such owner or occupant against Owner, Engineer, or any other party indemnified hereunder to the extent caused by or based upon Contractor's performance of the Work.

B. *Removal of Debris During Performance of the Work:* During the progress of the Work Contractor shall keep the Site and other areas free from accumulations of waste materials, rubbish, and other debris. Removal and disposal of such waste materials, rubbish, and other debris shall conform to applicable Laws and Regulations.

C. *Cleaning:* Prior to Substantial Completion of the Work Contractor shall clean the Site and the Work and make it ready for utilization by Owner. At the completion of the Work Contractor shall remove from the Site all tools, appliances, construction equipment and machinery, and surplus materials and shall restore to original condition all property not designated for alteration by the Contract Documents.

D. *Loading Structures:* Contractor shall not load nor permit any part of any structure to be loaded in any manner that will endanger the structure, nor shall Contractor subject any part of the Work or adjacent property to stresses or pressures that will endanger it.

6.12 *Record Documents*

A. Contractor shall maintain in a safe place at the Site one record copy of all Drawings, Specifications, Addenda, Change Orders, Work Change Directives, Field Orders, and written interpretations and clarifications in good order and annotated to show changes made during construction. These record documents together with all approved Samples and a counterpart of all approved Shop Drawings will be available to Engineer for reference. Upon completion of the Work, these record documents, Samples, and Shop Drawings will be delivered to Engineer for Owner.

6.13 *Safety and Protection*

A. Contractor shall be solely responsible for initiating, maintaining and supervising all safety precautions and programs in connection with the Work. Contractor shall take all necessary precautions for the safety of, and shall provide the necessary protection to prevent damage, injury or loss to:

1. all persons on the Site or who may be affected by the Work;

2. all the Work and materials and equipment to be incorporated therein, whether in storage on or off the Site; and

3. other property at the Site or adjacent thereto, including trees, shrubs, lawns, walks, pavements, roadways, structures, utilities, and Underground Facilities not designated for removal, relocation, or replacement in the course of construction.

B. Contractor shall comply with all applicable Laws and Regulations relating to the safety of persons or property, or to the protection of persons or property from damage, injury, or loss; and shall erect and maintain all necessary safeguards for such safety and protection. Contractor shall notify owners of adjacent property and of Underground Facilities and other utility owners when prosecution of the Work may affect them, and shall cooperate with them in the protection, removal, relocation, and replacement of their property.

C. All damage, injury, or loss to any property referred to in Paragraph 6.13.A.2 or 6.13.A.3 caused, directly or indirectly, in whole or in part, by Contractor, any Subcontractor, Supplier, or any other individual or entity directly or indirectly employed by any of them to perform any of the Work, or anyone for whose acts any of them may be liable, shall be remedied by Contractor (except damage or loss attributable to the fault of Draw-

Copyright © 2002 National Society of Professional Engineers for EJCDC. All rights reserved.

ings or Specifications or to the acts or omissions of Owner or Engineer or , or anyone employed by any of them, or anyone for whose acts any of them may be liable, and not attributable, directly or indirectly, in whole or in part, to the fault or negligence of Contractor or any Subcontractor, Supplier, or other individual or entity directly or indirectly employed by any of them).

D. Contractor's duties and responsibilities for safety and for protection of the Work shall continue until such time as all the Work is completed and Engineer has issued a notice to Owner and Contractor in accordance with Paragraph 14.07.B that the Work is acceptable (except as otherwise expressly provided in connection with Substantial Completion).

6.14 *Safety Representative*

A. Contractor shall designate a qualified and experienced safety representative at the Site whose duties and responsibilities shall be the prevention of accidents and the maintaining and supervising of safety precautions and programs.

6.15 *Hazard Communication Programs*

A. Contractor shall be responsible for coordinating any exchange of material safety data sheets or other hazard communication information required to be made available to or exchanged between or among employers at the Site in accordance with Laws or Regulations.

6.16 *Emergencies*

A. In emergencies affecting the safety or protection of persons or the Work or property at the Site or adjacent thereto, Contractor is obligated to act to prevent threatened damage, injury, or loss. Contractor shall give Engineer prompt written notice if Contractor believes that any significant changes in the Work or variations from the Contract Documents have been caused thereby or are required as a result thereof. If Engineer determines that a change in the Contract Documents is required because of the action taken by Contractor in response to such an emergency, a Work Change Directive or Change Order will be issued.

6.17 *Shop Drawings and Samples*

A. Contractor shall submit Shop Drawings and Samples to Engineer for review and approval in accordance with the acceptable Schedule of Submittals (as required by Paragraph 2.07). Each submittal will be identified as Engineer may require.

1. Shop Drawings

a. Submit number of copies specified in the General Requirements.

b. Data shown on the Shop Drawings will be complete with respect to quantities, dimensions, specified performance and design criteria, materials, and similar data to show Engineer the services, materials, and equipment Contractor proposes to provide and to enable Engineer to review the information for the limited purposes required by Paragraph 6.17.D.

2. *Samples:* Contractor shall also submit Samples to Engineer for review and approval in accordance with the acceptable schedule of Shop Drawings and Sample submittals.

a. Submit number of Samples specified in the Specifications.

b. Clearly identify each Sample as to material, Supplier, pertinent data such as catalog numbers, the use for which intended and other data as Engineer may require to enable Engineer to review the submittal for the limited purposes required by Paragraph 6.17.D.

B. Where a Shop Drawing or Sample is required by the Contract Documents or the Schedule of Submittals , any related Work performed prior to Engineer's review and approval of the pertinent submittal will be at the sole expense and responsibility of Contractor.

C. Submittal Procedures

1. Before submitting each Shop Drawing or Sample, Contractor shall have determined and verified:

a. all field measurements, quantities, dimensions, specified performance and design criteria, installation requirements, materials, catalog numbers, and similar information with respect thereto;

b. the suitability of all materials with respect to intended use, fabrication, shipping, handling, storage, assembly, and installation pertaining to the performance of the Work;

c. all information relative to Contractor's responsibilities for means, methods, techniques, sequences, and procedures of construction, and safety precautions and programs incident thereto; and

d. shall also have reviewed and coordinated each Shop Drawing or Sample with other Shop Drawings and Samples and with the requirements of the Work and the Contract Documents.

2. Each submittal shall bear a stamp or specific written certification that Contractor has satisfied Contractor's obligations under the Contract Documents

Copyright © 2002 National Society of Professional Engineers for EJCDC. All rights reserved.

with respect to Contractor's review and approval of that submittal.

3. With each submittal, Contractor shall give Engineer specific written notice of any variations, that the Shop Drawing or Sample may have from the requirements of the Contract Documents. This notice shall be both a written communication separate from the Shop Drawing's or Sample Submittal; and, in addition, by a specific notation made on each Shop Drawing or Sample submitted to Engineer for review and approval of each such variation.

D. *Engineer's Review*

1. Engineer will provide timely review of Shop Drawings and Samples in accordance with the Schedule of Submittals acceptable to Engineer. Engineer's review and approval will be only to determine if the items covered by the submittals will, after installation or incorporation in the Work, conform to the information given in the Contract Documents and be compatible with the design concept of the completed Project as a functioning whole as indicated by the Contract Documents.

2. Engineer's review and approval will not extend to means, methods, techniques, sequences, or procedures of construction (except where a particular means, method, technique, sequence, or procedure of construction is specifically and expressly called for by the Contract Documents) or to safety precautions or programs incident thereto. The review and approval of a separate item as such will not indicate approval of the assembly in which the item functions.

3. Engineer's review and approval shall not relieve Contractor from responsibility for any variation from the requirements of the Contract Documents unless Contractor has complied with the requirements of Paragraph 6.17.C.3 and Engineer has given written approval of each such variation by specific written notation thereof incorporated in or accompanying the Shop Drawing or Sample. Engineer's review and approval shall not relieve Contractor from responsibility for complying with the requirements of Paragraph 6.17.C.1.

E. *Resubmittal Procedures*

1. Contractor shall make corrections required by Engineer and shall return the required number of corrected copies of Shop Drawings and submit, as required, new Samples for review and approval. Contractor shall direct specific attention in writing to revisions other than the corrections called for by Engineer on previous submittals.

6.18 *Continuing the Work*

A. Contractor shall carry on the Work and adhere to the Progress Schedule during all disputes or disagreements with Owner. No Work shall be delayed or postponed pending resolution of any disputes or disagreements, except as permitted by Paragraph 15.04 or as Owner and Contractor may otherwise agree in writing.

6.19 *Contractor's General Warranty and Guarantee*

A. Contractor warrants and guarantees to Owner that all Work will be in accordance with the Contract Documents and will not be defective. Engineer and its Related Entities shall be entitled to rely on representation of Contractor's warranty and guarantee.

B. Contractor's warranty and guarantee hereunder excludes defects or damage caused by:

1. abuse, modification, or improper maintenance or operation by persons other than Contractor, Subcontractors, Suppliers, or any other individual or entity for whom Contractor is responsible; or

2. normal wear and tear under normal usage.

C. Contractor's obligation to perform and complete the Work in accordance with the Contract Documents shall be absolute. None of the following will constitute an acceptance of Work that is not in accordance with the Contract Documents or a release of Contractor's obligation to perform the Work in accordance with the Contract Documents:

1. observations by Engineer;

2. recommendation by Engineer or payment by Owner of any progress or final payment;

3. the issuance of a certificate of Substantial Completion by Engineer or any payment related thereto by Owner;

4. use or occupancy of the Work or any part thereof by Owner;

5. any review and approval of a Shop Drawing or Sample submittal or the issuance of a notice of acceptability by Engineer;

6. any inspection, test, or approval by others; or

7. any correction of defective Work by Owner.

6.20 *Indemnification*

A. To the fullest extent permitted by Laws and Regulations, Contractor shall indemnify and hold harmless Owner and Engineer, and the officers, directors, partners, employees, agents, consultants and subcontractors of each and any of them from and against all claims, costs, losses, and damages (including but not limited to all fees and charges of engineers, architects, attorneys, and other professionals and all court or

Copyright © 2002 National Society of Professional Engineers for EJCDC. All rights reserved.

arbitration or other dispute resolution costs) arising out of or relating to the performance of the Work, provided that any such claim, cost, loss, or damage is attributable to bodily injury, sickness, disease, or death, or to injury to or destruction of tangible property (other than the Work itself), including the loss of use resulting therefrom but only to the extent caused by any negligent act or omission of Contractor, any Subcontractor, any Supplier, or any individual or entity directly or indirectly employed by any of them to perform any of the Work or anyone for whose acts any of them may be liable .

B. In any and all claims against Owner or Engineer or any of their respective consultants, agents, officers, directors, partners, or employees by any employee (or the survivor or personal representative of such employee) of Contractor, any Subcontractor, any Supplier, or any individual or entity directly or indirectly employed by any of them to perform any of the Work, or anyone for whose acts any of them may be liable, the indemnification obligation under Paragraph 6.20.A shall not be limited in any way by any limitation on the amount or type of damages, compensation, or benefits payable by or for Contractor or any such Subcontractor, Supplier, or other individual or entity under workers' compensation acts, disability benefit acts, or other employee benefit acts.

C. The indemnification obligations of Contractor under Paragraph 6.20.A shall not extend to the liability of Engineer and Engineer's officers, directors, partners, employees, agents, consultants and subcontractors arising out of:

1. the preparation or approval of, or the failure to prepare or approve, maps, Drawings, opinions, reports, surveys, Change Orders, designs, or Specifications; or

2. giving directions or instructions, or failing to give them, if that is the primary cause of the injury or damage.

6.21 *Delegation of Professional Design Services*

A. Contractor will not be required to provide professional design services unless such services are specifically required by the Contract Documents for a portion of the Work or unless such services are required to carry out Contractor's responsibilities for construction means, methods, techniques, sequences and procedures. Contractor shall not be required to provide professional services in violation of applicable law.

B. If professional design services or certifications by a design professional related to systems, materials or equipment are specifically required of Contractor by the Contract Documents, Owner and Engineer will specify all performance and design criteria that such services must satisfy. Contractor shall cause such services or certifications to be provided by a properly licensed professional, whose signature and seal shall appear on all drawings, calculations, specifications, certifications, Shop Drawings and other submittals prepared by such professional. Shop Drawings and other submittals related to the Work designed or certified by such professional, if prepared by others, shall bear such professional's written approval when submitted to Engineer.

C. Owner and Engineer shall be entitled to rely upon the adequacy, accuracy and completeness of the services, certifications or approvals performed by such design professionals, provided Owner and Engineer have specified to Contractor all performance and design criteria that such services must satisfy.

D. Pursuant to this Paragraph 6.21, Engineer's review and approval of design calculations and design drawings will be only for the limited purpose of checking for conformance with performance and design criteria given and the design concept expressed in the Contract Documents. Engineer's review and approval of Shop Drawings and other submittals (except design calculations and design drawings) will be only for the purpose stated in Paragraph 6.17.D.1.

E. Contractor shall not be responsible for the adequacy of the performance or design criteria required by the Contract Documents.

ARTICLE 7 - OTHER WORK AT THE SITE

7.01 *Related Work at Site*

A. Owner may perform other work related to the Project at the Site with Owner's employees, or via other direct contracts therefor, or have other work performed by utility owners. If such other work is not noted in the Contract Documents, then:

1. written notice thereof will be given to Contractor prior to starting any such other work; and

2. if Owner and Contractor are unable to agree on entitlement to or on the amount or extent, if any, of any adjustment in the Contract Price or Contract Times that should be allowed as a result of such other work, a Claim may be made therefor as provided in Paragraph 10.05.

B. Contractor shall afford each other contractor who is a party to such a direct contract, each utility owner and Owner, if Owner is performing other work with Owner's employees, proper and safe access to the Site, a reasonable opportunity for the introduction and storage of materials and equipment and the execution of such other work, and shall properly coordinate the Work with theirs. Contractor shall do all cutting, fitting, and patching of the Work that may be required to properly connect or otherwise make its several parts come together and

Copyright © 2002 National Society of Professional Engineers for EJCDC. All rights reserved.

properly integrate with such other work. Contractor shall not endanger any work of others by cutting, excavating, or otherwise altering their work and will only cut or alter their work with the written consent of Engineer and the others whose work will be affected. The duties and responsibilities of Contractor under this Paragraph are for the benefit of such utility owners and other contractors to the extent that there are comparable provisions for the benefit of Contractor in said direct contracts between Owner and such utility owners and other contractors.

C. If the proper execution or results of any part of Contractor's Work depends upon work performed by others under this Article 7, Contractor shall inspect such other work and promptly report to Engineer in writing any delays, defects, or deficiencies in such other work that render it unavailable or unsuitable for the proper execution and results of Contractor's Work. Contractor's failure to so report will constitute an acceptance of such other work as fit and proper for integration with Contractor's Work except for latent defects and deficiencies in such other work.

7.02 *Coordination*

A. If Owner intends to contract with others for the performance of other work on the Project at the Site, the following will be set forth in Supplementary Conditions:

1. the individual or entity who will have authority and responsibility for coordination of the activities among the various contractors will be identified;

2. the specific matters to be covered by such authority and responsibility will be itemized; and

3. the extent of such authority and responsibilities will be provided.

B. Unless otherwise provided in the Supplementary Conditions, Owner shall have sole authority and responsibility for such coordination.

7.03 *Legal Relationships*

A. Paragraphs 7.01.A and 7.02 are not applicable for utilities not under the control of Owner.

B. Each other direct contract of Owner under Paragraph 7.01.A shall provide that the other contractor is liable to Owner and Contractor for the reasonable direct delay and disruption costs incurred by Contractor as a result of the other contractor's actions or inactions.

C. Contractor shall be liable to Owner and any other contractor for the reasonable direct delay and disruption costs incurred by such other contractor as a result of Contractor's action or inactions.

ARTICLE 8 - OWNER'S RESPONSIBILITIES

8.01 *Communications to Contractor*

A. Except as otherwise provided in these General Conditions, Owner shall issue all communications to Contractor through Engineer.

8.02 *Replacement of Engineer*

A. In case of termination of the employment of Engineer, Owner shall appoint an engineer to whom Contractor makes no reasonable objection, whose status under the Contract Documents shall be that of the former Engineer.

8.03 *Furnish Data*

A. Owner shall promptly furnish the data required of Owner under the Contract Documents.

8.04 *Pay When Due*

A. Owner shall make payments to Contractor when they are due as provided in Paragraphs 14.02.C and 14.07.C.

8.05 *Lands and Easements; Reports and Tests*

A. Owner's duties in respect of providing lands and easements and providing engineering surveys to establish reference points are set forth in Paragraphs 4.01 and 4.05. Paragraph 4.02 refers to Owner's identifying and making available to Contractor copies of reports of explorations and tests of subsurface conditions and drawings of physical conditions in or relating to existing surface or subsurface structures at or contiguous to the Site that have been utilized by Engineer in preparing the Contract Documents.

8.06 *Insurance*

A. Owner's responsibilities, if any, in respect to purchasing and maintaining liability and property insurance are set forth in Article 5.

8.07 *Change Orders*

A. Owner is obligated to execute Change Orders as indicated in Paragraph 10.03.

8.08 *Inspections, Tests, and Approvals*

A. Owner's responsibility in respect to certain inspections, tests, and approvals is set forth in Paragraph 13.03.B.

Copyright © 2002 National Society of Professional Engineers for EJCDC. All rights reserved.

8.09 *Limitations on Owner's Responsibilities*

A. The Owner shall not supervise, direct, or have control or authority over, nor be responsible for, Contractor's means, methods, techniques, sequences, or procedures of construction, or the safety precautions and programs incident thereto, or for any failure of Contractor to comply with Laws and Regulations applicable to the performance of the Work. Owner will not be responsible for Contractor's failure to perform the Work in accordance with the Contract Documents.

8.10 *Undisclosed Hazardous Environmental Condition*

A. Owner's responsibility in respect to an undisclosed Hazardous Environmental Condition is set forth in Paragraph 4.06.

8.11 *Evidence of Financial Arrangements*

A. If and to the extent Owner has agreed to furnish Contractor reasonable evidence that financial arrangements have been made to satisfy Owner's obligations under the Contract Documents, Owner's responsibility in respect thereof will be as set forth in the Supplementary Conditions.

ARTICLE 9 - ENGINEER'S STATUS DURING CONSTRUCTION

9.01 *Owner's Representative*

A. Engineer will be Owner's representative during the construction period. The duties and responsibilities and the limitations of authority of Engineer as Owner's representative during construction are set forth in the Contract Documents and will not be changed without written consent of Owner and Engineer.

9.02 *Visits to Site*

A. Engineer will make visits to the Site at intervals appropriate to the various stages of construction as Engineer deems necessary in order to observe as an experienced and qualified design professional the progress that has been made and the quality of the various aspects of Contractor's executed Work. Based on information obtained during such visits and observations, Engineer, for the benefit of Owner, will determine, in general, if the Work is proceeding in accordance with the Contract Documents. Engineer will not be required to make exhaustive or continuous inspections on the Site to check the quality or quantity of the Work. Engineer's efforts will be directed toward providing for Owner a greater degree of confidence that the completed Work will conform generally to the Contract Documents. On the basis of such visits and observations, Engineer will keep Owner informed of the progress of the Work and will endeavor to guard Owner against defective Work.

B. Engineer's visits and observations are subject to all the limitations on Engineer's authority and responsibility set forth in Paragraph 9.09. Particularly, but without limitation, during or as a result of Engineer's visits or observations of Contractor's Work Engineer will not supervise, direct, control, or have authority over or be responsible for Contractor's means, methods, techniques, sequences, or procedures of construction, or the safety precautions and programs incident thereto, or for any failure of Contractor to comply with Laws and Regulations applicable to the performance of the Work.

9.03 *Project Representative*

A. If Owner and Engineer agree, Engineer will furnish a Resident Project Representative to assist Engineer in providing more extensive observation of the Work. The authority and responsibilities of any such Resident Project Representative and assistants will be as provided in the Supplementary Conditions, and limitations on the responsibilities thereof will be as provided in Paragraph 9.09. If Owner designates another representative or agent to represent Owner at the Site who is not Engineer's consultant, agent or employee, the responsibilities and authority and limitations thereon of such other individual or entity will be as provided in the Supplementary Conditions.

9.04 *Authorized Variations in Work*

A. Engineer may authorize minor variations in the Work from the requirements of the Contract Documents which do not involve an adjustment in the Contract Price or the Contract Times and are compatible with the design concept of the completed Project as a functioning whole as indicated by the Contract Documents. These may be accomplished by a Field Order and will be binding on Owner and also on Contractor, who shall perform the Work involved promptly. If Owner or Contractor believes that a Field Order justifies an adjustment in the Contract Price or Contract Times, or both, and the parties are unable to agree on entitlement to or on the amount or extent, if any, of any such adjustment , a Claim may be made therefor as provided in Paragraph 10.05.

9.05 *Rejecting Defective Work*

A. Engineer will have authority to reject Work which Engineer believes to be defective, or that Engineer believes will not produce a completed Project that conforms to the Contract Documents or that will prejudice the integrity of the design concept of the completed Project as a functioning whole as indicated by the Contract Documents. Engineer will also have authority to require special inspection or testing of the Work as provided in Paragraph 13.04, whether or not the Work is fabricated, installed, or completed.

Copyright © 2002 National Society of Professional Engineers for EJCDC. All rights reserved.

9.06 *Shop Drawings, Change Orders and Payments*

A. In connection with Engineer's authority, and limitations thereof, as to Shop Drawings and Samples, see Paragraph 6.17.

B. In connection with Engineer's authority, and limitations thereof, as to design calculations and design drawings submitted in response to a delegation of professional design services, if any, see Paragraph 6.21.

C. In connection with Engineer's authority as to Change Orders, see Articles 10, 11, and 12.

D. In connection with Engineer's authority as to Applications for Payment, see Article 14.

9.07 *Determinations for Unit Price Work*

A. Engineer will determine the actual quantities and classifications of Unit Price Work performed by Contractor. Engineer will review with Contractor the Engineer's preliminary determinations on such matters before rendering a written decision thereon (by recommendation of an Application for Payment or otherwise). Engineer's written decision thereon will be final and binding (except as modified by Engineer to reflect changed factual conditions or more accurate data) upon Owner and Contractor, subject to the provisions of Paragraph 10.05.

9.08 *Decisions on Requirements of Contract Documents and Acceptability of Work*

A. Engineer will be the initial interpreter of the requirements of the Contract Documents and judge of the acceptability of the Work thereunder. All matters in question and other matters between Owner and Contractor arising prior to the date final payment is due relating to the acceptability of the Work, and the interpretation of the requirements of the Contract Documents pertaining to the performance of the Work, will be referred initially to Engineer in writing within 30 days of the event giving rise to the question

B. Engineer will, with reasonable promptness, render a written decision on the issue referred. If Owner or Contractor believe that any such decision entitles them to an adjustment in the Contract Price or Contract Times or both, a Claim may be made under Paragraph 10.05. The date of Engineer's decision shall be the date of the event giving rise to the issues referenced for the purposes of Paragraph 10.05.B.

C. Engineer's written decision on the issue referred will be final and binding on Owner and Contractor, subject to the provisions of Paragraph 10.05.

D. When functioning as interpreter and judge under this Paragraph 9.08, Engineer will not show partiality to Owner or Contractor and will not be liable in connection with any interpretation or decision rendered in good faith in such capacity.

9.09 *Limitations on Engineer's Authority and Responsibilities*

A. Neither Engineer's authority or responsibility under this Article 9 or under any other provision of the Contract Documents nor any decision made by Engineer in good faith either to exercise or not exercise such authority or responsibility or the undertaking, exercise, or performance of any authority or responsibility by Engineer shall create, impose, or give rise to any duty in contract, tort, or otherwise owed by Engineer to Contractor, any Subcontractor, any Supplier, any other individual or entity, or to any surety for or employee or agent of any of them.

B. Engineer will not supervise, direct, control, or have authority over or be responsible for Contractor's means, methods, techniques, sequences, or procedures of construction, or the safety precautions and programs incident thereto, or for any failure of Contractor to comply with Laws and Regulations applicable to the performance of the Work. Engineer will not be responsible for Contractor's failure to perform the Work in accordance with the Contract Documents.

C. Engineer will not be responsible for the acts or omissions of Contractor or of any Subcontractor, any Supplier, or of any other individual or entity performing any of the Work.

D. Engineer's review of the final Application for Payment and accompanying documentation and all maintenance and operating instructions, schedules, guarantees, bonds, certificates of inspection, tests and approvals, and other documentation required to be delivered by Paragraph 14.07.A will only be to determine generally that their content complies with the requirements of, and in the case of certificates of inspections, tests, and approvals that the results certified indicate compliance with the Contract Documents.

E. The limitations upon authority and responsibility set forth in this Paragraph 9.09 shall also apply to, the Resident Project Representative, if any, and assistants, if any.

ARTICLE 10 - CHANGES IN THE WORK; CLAIMS

10.01 *Authorized Changes in the Work*

A. Without invalidating the Contract and without notice to any surety, Owner may, at any time or from time to time, order additions, deletions, or revisions in the Work by a Change Order, or a Work Change Directive. Upon receipt of any such document, Contractor shall

Copyright © 2002 National Society of Professional Engineers for EJCDC. All rights reserved.

promptly proceed with the Work involved which will be performed under the applicable conditions of the Contract Documents (except as otherwise specifically provided).

B. If Owner and Contractor are unable to agree on entitlement to, or on the amount or extent, if any, of an adjustment in the Contract Price or Contract Times, or both, that should be allowed as a result of a Work Change Directive, a Claim may be made therefor as provided in Paragraph 10.05.

10.02 *Unauthorized Changes in the Work*

A.Contractor shall not be entitled to an increase in the Contract Price or an extension of the Contract Times with respect to any work performed that is not required by the Contract Documents as amended, modified, or supplemented as provided in Paragraph 3.04, except in the case of an emergency as provided in Paragraph 6.16 or in the case of uncovering Work as provided in Paragraph 13.04.B.

10.03 *Execution of Change Orders*

A. Owner and Contractor shall execute appropriate Change Orders recommended by Engineer covering:

1. changes in the Work which are: (i) ordered by Owner pursuant to Paragraph 10.01.A, (ii) required because of acceptance of defective Work under Paragraph 13.08.A or Owner's correction of defective Work under Paragraph 13.09, or (iii) agreed to by the parties;

2. changes in the Contract Price or Contract Times which are agreed to by the parties, including any undisputed sum or amount of time for Work actually performed in accordance with a Work Change Directive; and

3. changes in the Contract Price or Contract Times which embody the substance of any written decision rendered by Engineer pursuant to Paragraph 10.05; provided that, in lieu of executing any such Change Order, an appeal may be taken from any such decision in accordance with the provisions of the Contract Documents and applicable Laws and Regulations, but during any such appeal, Contractor shall carry on the Work and adhere to the Progress Schedule as provided in Paragraph 6.18.A.

10.04 *Notification to Surety*

A. If notice of any change affecting the general scope of the Work or the provisions of the Contract Documents (including, but not limited to, Contract Price or Contract Times) is required by the provisions of any bond to be given to a surety, the giving of any such notice will be Contractor's responsibility. The amount of each applicable bond will be adjusted to reflect the effect of any such change.

10.05 *Claims*

A. *Engineer's Decision Required*: All Claims, except those waived pursuant to Paragraph 14.09, shall be referred to the Engineer for decision. A decision by Engineer shall be required as a condition precedent to any exercise by Owner or Contractor of any rights or remedies either may otherwise have under the Contract Documents or by Laws and Regulations in respect of such Claims.

B. *Notice:* Written notice stating the general nature of each Claim, shall be delivered by the claimant to Engineer and the other party to the Contract promptly (but in no event later than 30 days) after the start of the event giving rise thereto. The responsibility to substantiate a Claim shall rest with the party making the Claim. Notice of the amount or extent of the Claim, with supporting data shall be delivered to the Engineer and the other party to the Contract within 60 days after the start of such event (unless Engineer allows additional time for claimant to submit additional or more accurate data in support of such Claim). A Claim for an adjustment in Contract Price shall be prepared in accordance with the provisions of Paragraph 12.01.B. A Claim for an adjustment in Contract Time shall be prepared in accordance with the provisions of Paragraph 12.02.B. Each Claim shall be accompanied by claimant's written statement that the adjustment claimed is the entire adjustment to which the claimant believes it is entitled as a result of said event. The opposing party shall submit any response to Engineer and the claimant within 30 days after receipt of the claimant's last submittal (unless Engineer allows additional time).

C. *Engineer's Action*: Engineer will review each Claim and, within 30 days after receipt of the last submittal of the claimant or the last submittal of the opposing party, if any, take one of the following actions in writing:

1. deny the Claim in whole or in part,

2. approve the Claim, or

3. notify the parties that the Engineer is unable to resolve the Claim if, in the Engineer's sole discretion, it would be inappropriate for the Engineer to do so. For purposes of further resolution of the Claim, such notice shall be deemed a denial.

D. In the event that Engineer does not take action on a Claim within said 30 days, the Claim shall be deemed denied.

E. Engineer's written action under Paragraph 10.05.C or denial pursuant to Paragraphs 10.05.C.3 or 10.05.D will be final and binding upon Owner and Contractor, unless Owner or Contractor invoke the dispute resolution procedure set forth in Article 16 within 30 days of such action or denial.

Copyright © 2002 National Society of Professional Engineers for EJCDC. All rights reserved.

F. No Claim for an adjustment in Contract Price or Contract Times will be valid if not submitted in accordance with this Paragraph 10.05.

ARTICLE 11 - COST OF THE WORK; ALLOWANCES; UNIT PRICE WORK

11.01 *Cost of the Work*

A. *Costs Included:* The term Cost of the Work means the sum of all costs, except those excluded in Paragraph 11.01.B, necessarily incurred and paid by Contractor in the proper performance of the Work. When the value of any Work covered by a Change Order or when a Claim for an adjustment in Contract Price is determined on the basis of Cost of the Work, the costs to be reimbursed to Contractor will be only those additional or incremental costs required because of the change in the Work or because of the event giving rise to the Claim. Except as otherwise may be agreed to in writing by Owner, such costs shall be in amounts no higher than those prevailing in the locality of the Project, shall include only the following items, and shall not include any of the costs itemized in Paragraph 11.01.B.

1. Payroll costs for employees in the direct employ of Contractor in the performance of the Work under schedules of job classifications agreed upon by Owner and Contractor. Such employees shall include, without limitation, superintendents, foremen, and other personnel employed full time at the Site. Payroll costs for employees not employed full time on the Work shall be apportioned on the basis of their time spent on the Work. Payroll costs shall include, but not be limited to, salaries and wages plus the cost of fringe benefits, which shall include social security contributions, unemployment, excise, and payroll taxes, workers' compensation, health and retirement benefits, bonuses, sick leave, vacation and holiday pay applicable thereto. The expenses of performing Work outside of regular working hours, on Saturday, Sunday, or legal holidays, shall be included in the above to the extent authorized by Owner.

2. Cost of all materials and equipment furnished and incorporated in the Work, including costs of transportation and storage thereof, and Suppliers' field services required in connection therewith. All cash discounts shall accrue to Contractor unless Owner deposits funds with Contractor with which to make payments, in which case the cash discounts shall accrue to Owner. All trade discounts, rebates and refunds and returns from sale of surplus materials and equipment shall accrue to Owner, and Contractor shall make provisions so that they may be obtained.

3. Payments made by Contractor to Subcontractors for Work performed by Subcontractors. If required by Owner, Contractor shall obtain competitive bids from subcontractors acceptable to Owner and Contractor and shall deliver such bids to Owner, who will then determine, with the advice of Engineer, which bids, if any, will be acceptable. If any subcontract provides that the Subcontractor is to be paid on the basis of Cost of the Work plus a fee, the Subcontractor's Cost of the Work and fee shall be determined in the same manner as Contractor's Cost of the Work and fee as provided in this Paragraph 11.01.

4. Costs of special consultants (including but not limited to Engineers, architects, testing laboratories, surveyors, attorneys, and accountants) employed for services specifically related to the Work.

5. Supplemental costs including the following:

a. The proportion of necessary transportation, travel, and subsistence expenses of Contractor's employees incurred in discharge of duties connected with the Work.

b. Cost, including transportation and maintenance, of all materials, supplies, equipment, machinery, appliances, office, and temporary facilities at the Site, and hand tools not owned by the workers, which are consumed in the performance of the Work, and cost, less market value, of such items used but not consumed which remain the property of Contractor.

c. Rentals of all construction equipment and machinery, and the parts thereof whether rented from Contractor or others in accordance with rental agreements approved by Owner with the advice of Engineer, and the costs of transportation, loading, unloading, assembly, dismantling, and removal thereof. All such costs shall be in accordance with the terms of said rental agreements. The rental of any such equipment, machinery, or parts shall cease when the use thereof is no longer necessary for the Work.

d. Sales, consumer, use, and other similar taxes related to the Work, and for which Contractor is liable, imposed by Laws and Regulations.

e. Deposits lost for causes other than negligence of Contractor, any Subcontractor, or anyone directly or indirectly employed by any of them or for whose acts any of them may be liable, and royalty payments and fees for permits and licenses.

f. Losses and damages (and related expenses) caused by damage to the Work, not compensated by insurance or otherwise, sustained by Contractor in connection with the performance of the Work (except losses and damages within the deductible amounts of property insurance established in accordance with Paragraph 5.06.D), provided such losses and damages have

Copyright © 2002 National Society of Professional Engineers for EJCDC. All rights reserved.

resulted from causes other than the negligence of Contractor, any Subcontractor, or anyone directly or indirectly employed by any of them or for whose acts any of them may be liable. Such losses shall include settlements made with the written consent and approval of Owner. No such losses, damages, and expenses shall be included in the Cost of the Work for the purpose of determining Contractor's fee.

g. The cost of utilities, fuel, and sanitary facilities at the Site.

h. Minor expenses such as telegrams, long distance telephone calls, telephone service at the Site, expresses, and similar petty cash items in connection with the Work.

i. The costs of premiums for all bonds and insurance Contractor is required by the Contract Documents to purchase and maintain.

B. *Costs Excluded:* The term Cost of the Work shall not include any of the following items:

1. Payroll costs and other compensation of Contractor's officers, executives, principals (of partnerships and sole proprietorships), general managers, safety managers, engineers, architects, estimators, attorneys, auditors, accountants, purchasing and contracting agents, expediters, timekeepers, clerks, and other personnel employed by Contractor, whether at the Site or in Contractor's principal or branch office for general administration of the Work and not specifically included in the agreed upon schedule of job classifications referred to in Paragraph 11.01.A.1 or specifically covered by Paragraph 11.01.A.4, all of which are to be considered administrative costs covered by the Contractor's fee.

2. Expenses of Contractor's principal and branch offices other than Contractor's office at the Site.

3. Any part of Contractor's capital expenses, including interest on Contractor's capital employed for the Work and charges against Contractor for delinquent payments.

4. Costs due to the negligence of Contractor, any Subcontractor, or anyone directly or indirectly employed by any of them or for whose acts any of them may be liable, including but not limited to, the correction of defective Work, disposal of materials or equipment wrongly supplied, and making good any damage to property.

5. Other overhead or general expense costs of any kind and the costs of any item not specifically and expressly included in Paragraphs 11.01.A and 11.01.B.

C. *Contractor's Fee:* When all the Work is performed on the basis of cost-plus, Contractor's fee shall be determined as set forth in the Agreement. When the value of any Work covered by a Change Order or when a Claim for an adjustment in Contract Price is determined on the basis of Cost of the Work, Contractor's fee shall be determined as set forth in Paragraph 12.01.C.

D. *Documentation:* Whenever the Cost of the Work for any purpose is to be determined pursuant to Paragraphs 11.01.A and 11.01.B, Contractor will establish and maintain records thereof in accordance with generally accepted accounting practices and submit in a form acceptable to Engineer an itemized cost breakdown together with supporting data.

11.02 *Allowances*

A. It is understood that Contractor has included in the Contract Price all allowances so named in the Contract Documents and shall cause the Work so covered to be performed for such sums and by such persons or entities as may be acceptable to Owner and Engineer.

B. *Cash Allowances*

1. Contractor agrees that:

a. the cash allowances include the cost to Contractor (less any applicable trade discounts) of materials and equipment required by the allowances to be delivered at the Site, and all applicable taxes; and

b. Contractor's costs for unloading and handling on the Site, labor, installation , overhead, profit, and other expenses contemplated for the cash allowances have been included in the Contract Price and not in the allowances, and no demand for additional payment on account of any of the foregoing will be valid.

C. Contingency Allowance

1. Contractor agrees that a contingency allowance, if any, is for the sole use of Owner to cover unanticipated costs.

D. Prior to final payment, an appropriate Change Order will be issued as recommended by Engineer to reflect actual amounts due Contractor on account of Work covered by allowances, and the Contract Price shall be correspondingly adjusted.

11.03 *Unit Price Work*

A. Where the Contract Documents provide that all or part of the Work is to be Unit Price Work, initially the Contract Price will be deemed to include for all Unit Price Work an amount equal to the sum of the unit price for each separately identified item of Unit Price Work times the estimated quantity of each item as indicated in the Agreement.

Copyright © 2002 National Society of Professional Engineers for EJCDC. All rights reserved.

B. The estimated quantities of items of Unit Price Work are not guaranteed and are solely for the purpose of comparison of Bids and determining an initial Contract Price. Determinations of the actual quantities and classifications of Unit Price Work performed by Contractor will be made by Engineer subject to the provisions of Paragraph 9.07.

C. Each unit price will be deemed to include an amount considered by Contractor to be adequate to cover Contractor's overhead and profit for each separately identified item.

D. Owner or Contractor may make a Claim for an adjustment in the Contract Price in accordance with Paragraph 10.05 if:

1. the quantity of any item of Unit Price Work performed by Contractor differs materially and significantly from the estimated quantity of such item indicated in the Agreement; and

2. there is no corresponding adjustment with respect any other item of Work; and

3. Contractor believes that Contractor is entitled to an increase in Contract Price as a result of having incurred additional expense or Owner believes that Owner is entitled to a decrease in Contract Price and the parties are unable to agree as to the amount of any such increase or decrease.

ARTICLE 12 - CHANGE OF CONTRACT PRICE; CHANGE OF CONTRACT TIMES

12.01 *Change of Contract Price*

A. The Contract Price may only be changed by a Change Order. Any Claim for an adjustment in the Contract Price shall be based on written notice submitted by the party making the Claim to the Engineer and the other party to the Contract in accordance with the provisions of Paragraph 10.05.

B. The value of any Work covered by a Change Order or of any Claim for an adjustment in the Contract Price will be determined as follows:

1. where the Work involved is covered by unit prices contained in the Contract Documents, by application of such unit prices to the quantities of the items involved (subject to the provisions of Paragraph 11.03); or

2. where the Work involved is not covered by unit prices contained in the Contract Documents, by a mutually agreed lump sum (which may include an allowance for overhead and profit not necessarily in accordance with Paragraph 12.01.C.2); or

3. where the Work involved is not covered by unit prices contained in the Contract Documents and agreement to a lump sum is not reached under Paragraph 12.01.B.2, on the basis of the Cost of the Work (determined as provided in Paragraph 11.01) plus a Contractor's fee for overhead and profit (determined as provided in Paragraph 12.01.C).

C. *Contractor's Fee:* The Contractor's fee for overhead and profit shall be determined as follows:

1. a mutually acceptable fixed fee; or

2. if a fixed fee is not agreed upon, then a fee based on the following percentages of the various portions of the Cost of the Work:

a. for costs incurred under Paragraphs 11.01.A.1 and 11.01.A.2, the Contractor's fee shall be 15 percent;

b. for costs incurred under Paragraph 11.01.A.3, the Contractor's fee shall be five percent;

c. where one or more tiers of subcontracts are on the basis of Cost of the Work plus a fee and no fixed fee is agreed upon, the intent of Paragraph 12.01.C.2.a is that the Subcontractor who actually performs the Work, at whatever tier, will be paid a fee of 15 percent of the costs incurred by such Subcontractor under Paragraphs 11.01.A.1 and 11.01.A.2 and that any higher tier Subcontractor and Contractor will each be paid a fee of five percent of the amount paid to the next lower tier Subcontractor;

d. no fee shall be payable on the basis of costs itemized under Paragraphs 11.01.A.4, 11.01.A.5, and 11.01.B;

e. the amount of credit to be allowed by Contractor to Owner for any change which results in a net decrease in cost will be the amount of the actual net decrease in cost plus a deduction in Contractor's fee by an amount equal to five percent of such net decrease; and

f. when both additions and credits are involved in any one change, the adjustment in Contractor's fee shall be computed on the basis of the net change in accordance with Paragraphs 12.01.C.2.a through 12.01.C.2.e, inclusive.

12.02 *Change of Contract Times*

A. The Contract Times may only be changed by a Change Order. Any Claim for an adjustment in the Contract Times shall be based on written notice submitted

Copyright © 2002 National Society of Professional Engineers for EJCDC. All rights reserved.

by the party making the Claim to the Engineer and the other party to the Contract in accordance with the provisions of Paragraph 10.05.

B. Any adjustment of the Contract Times covered by a Change Order or any Claim for an adjustment in the Contract Times will be determined in accordance with the provisions of this Article 12.

12.03 *Delays*

A. Where Contractor is prevented from completing any part of the Work within the Contract Times due to delay beyond the control of Contractor, the Contract Times will be extended in an amount equal to the time lost due to such delay if a Claim is made therefor as provided in Paragraph 12.02.A. Delays beyond the control of Contractor shall include, but not be limited to, acts or neglect by Owner, acts or neglect of utility owners or other contractors performing other work as contemplated by Article 7, fires, floods, epidemics, abnormal weather conditions, or acts of God.

B. If Owner, Engineer, or other contractors or utility owners performing other work for Owner as contemplated by Article 7, or anyone for whom Owner is responsible, delays, disrupts, or interferes with the performance or progress of the Work, then Contractor shall be entitled to an equitable adjustment in the Contract Price or the Contract Times , or both. Contractor's entitlement to an adjustment of the Contract Times is conditioned on such adjustment being essential to Contractor's ability to complete the Work within the Contract Times.

C If Contractor is delayed in the performance or progress of the Work by fire, flood, epidemic, abnormal weather conditions, acts of God, acts or failures to act of utility owners not under the control of Owner, or other causes not the fault of and beyond control of Owner and Contractor, then Contractor shall be entitled to an equitable adjustment in Contract Times, if such adjustment is essential to Contractor's ability to complete the Work within the Contract Times. Such an adjustment shall be Contractor's sole and exclusive remedy for the delays described in this Paragraph 12.03.C.

D. Owner, Engineer and the Related Entities of each of them shall not be liable to Contractor for any claims, costs, losses, or damages (including but not limited to all fees and charges of Engineers, architects, attorneys, and other professionals and all court or arbitration or other dispute resolution costs) sustained by Contractor on or in connection with any other project or anticipated project.

E. Contractor shall not be entitled to an adjustment in Contract Price or Contract Times for delays within the control of Contractor. Delays attributable to and within the control of a Subcontractor or Supplier shall be deemed to be delays within the control of Contractor.

ARTICLE 13 - TESTS AND INSPECTIONS; CORRECTION, REMOVAL OR ACCEPTANCE OF DEFECTIVE WORK

13.01 *Notice of Defects*

A. Prompt notice of all defective Work of which Owner or Engineer has actual knowledge will be given to Contractor. All defective Work may be rejected, corrected, or accepted as provided in this Article 13.

13.02 *Access to Work*

A. Owner, Engineer, their consultants and other representatives and personnel of Owner, independent testing laboratories, and governmental agencies with jurisdictional interests will have access to the Site and the Work at reasonable times for their observation, inspecting, and testing. Contractor shall provide them proper and safe conditions for such access and advise them of Contractor's Site safety procedures and programs so that they may comply therewith as applicable.

13.03 *Tests and Inspections*

A. Contractor shall give Engineer timely notice of readiness of the Work for all required inspections, tests, or approvals and shall cooperate with inspection and testing personnel to facilitate required inspections or tests.

B. Owner shall employ and pay for the services of an independent testing laboratory to perform all inspections, tests, or approvals required by the Contract Documents except:

1. for inspections, tests, or approvals covered by Paragraphs 13.03.C and 13.03.D below;

2. that costs incurred in connection with tests or inspections conducted pursuant to Paragraph 13.04.B shall be paid as provided in said Paragraph 13.04.C; and

3. as otherwise specifically provided in the Contract Documents.

C. If Laws or Regulations of any public body having jurisdiction require any Work (or part thereof) specifically to be inspected, tested, or approved by an employee or other representative of such public body, Contractor shall assume full responsibility for arranging and obtaining such inspections, tests, or approvals, pay all costs in connection therewith, and furnish Engineer the required certificates of inspection or approval.

D. Contractor shall be responsible for arranging and obtaining and shall pay all costs in connection with any inspections, tests, or approvals required for Owner's and Engineer's acceptance of materials or equipment to

Copyright © 2002 National Society of Professional Engineers for EJCDC. All rights reserved.

be incorporated in the Work; or acceptance of materials, mix designs, or equipment submitted for approval prior to Contractor's purchase thereof for incorporation in the Work. Such inspections, tests, or approvals shall be performed by organizations acceptable to Owner and Engineer.

E. If any Work (or the work of others) that is to be inspected, tested, or approved is covered by Contractor without written concurrence of Engineer, it must, if requested by Engineer, be uncovered for observation.

F. Uncovering Work as provided in Paragraph 13.03.E shall be at Contractor's expense unless Contractor has given Engineer timely notice of Contractor's intention to cover the same and Engineer has not acted with reasonable promptness in response to such notice.

13.04 *Uncovering Work*

A. If any Work is covered contrary to the written request of Engineer, it must, if requested by Engineer, be uncovered for Engineer's observation and replaced at Contractor's expense.

B. If Engineer considers it necessary or advisable that covered Work be observed by Engineer or inspected or tested by others, Contractor, at Engineer's request, shall uncover, expose, or otherwise make available for observation, inspection, or testing as Engineer may require, that portion of the Work in question, furnishing all necessary labor, material, and equipment.

C. If it is found that the uncovered Work is defective, Contractor shall pay all claims, costs, losses, and damages (including but not limited to all fees and charges of engineers, architects, attorneys, and other professionals and all court or arbitration or other dispute resolution costs) arising out of or relating to such uncovering, exposure, observation, inspection, and testing, and of satisfactory replacement or reconstruction (including but not limited to all costs of repair or replacement of work of others); and Owner shall be entitled to an appropriate decrease in the Contract Price. If the parties are unable to agree as to the amount thereof, Owner may make a Claim therefor as provided in Paragraph 10.05.

D. If, the uncovered Work is not found to be defective, Contractor shall be allowed an increase in the Contract Price or an extension of the Contract Times, or both, directly attributable to such uncovering, exposure, observation, inspection, testing, replacement, and reconstruction. If the parties are unable to agree as to the amount or extent thereof, Contractor may make a Claim therefor as provided in Paragraph 10.05.

13.05 *Owner May Stop the Work*

A. If the Work is defective, or Contractor fails to supply sufficient skilled workers or suitable materials or equipment, or fails to perform the Work in such a way that the completed Work will conform to the Contract Documents, Owner may order Contractor to stop the Work, or any portion thereof, until the cause for such order has been eliminated; however, this right of Owner to stop the Work shall not give rise to any duty on the part of Owner to exercise this right for the benefit of Contractor, any Subcontractor, any Supplier, any other individual or entity, or any surety for, or employee or agent of any of them.

13.06 *Correction or Removal of Defective Work*

A. Promptly after receipt of notice, Contractor shall correct all defective Work, whether or not fabricated, installed, or completed, or, if the Work has been rejected by Engineer, remove it from the Project and replace it with Work that is not defective. Contractor shall pay all claims, costs, losses, and damages (including but not limited to all fees and charges of engineers, architects, attorneys, and other professionals and all court or arbitration or other dispute resolution costs) arising out of or relating to such correction or removal (including but not limited to all costs of repair or replacement of work of others).

B. When correcting defective Work under the terms of this Paragraph 13.06 or Paragraph 13.07, Contractor shall take no action that would void or otherwise impair Owner's special warranty and guarantee, if any, on said Work.

13.07 *Correction Period*

A. If within one year after the date of Substantial Completion (or such longer period of time as may be prescribed by the terms of any applicable special guarantee required by the Contract Documents) or by any specific provision of the Contract Documents, any Work is found to be defective, or if the repair of any damages to the land or areas made available for Contractor's use by Owner or permitted by Laws and Regulations as contemplated in Paragraph 6.11.A is found to be defective, Contractor shall promptly, without cost to Owner and in accordance with Owner's written instructions:

1. repair such defective land or areas; or

2. correct such defective Work; or

3. if the defective Work has been rejected by Owner, remove it from the Project and replace it with Work that is not defective, and

4. satisfactorily correct or repair or remove and replace any damage to other Work, to the work of others or other land or areas resulting therefrom.

Copyright © 2002 National Society of Professional Engineers for EJCDC. All rights reserved.

B. If Contractor does not promptly comply with the terms of Owner's written instructions, or in an emergency where delay would cause serious risk of loss or damage, Owner may have the defective Work corrected or repaired or may have the rejected Work removed and replaced. All claims, costs, losses, and damages (including but not limited to all fees and charges of engineers, architects, attorneys, and other professionals and all court or arbitration or other dispute resolution costs) arising out of or relating to such correction or repair or such removal and replacement (including but not limited to all costs of repair or replacement of work of others) will be paid by Contractor.

C. In special circumstances where a particular item of equipment is placed in continuous service before Substantial Completion of all the Work, the correction period for that item may start to run from an earlier date if so provided in the Specifications .

D. Where defective Work (and damage to other Work resulting therefrom) has been corrected or removed and replaced under this Paragraph 13.07, the correction period hereunder with respect to such Work will be extended for an additional period of one year after such correction or removal and replacement has been satisfactorily completed.

E. Contractor's obligations under this Paragraph 13.07 are in addition to any other obligation or warranty. The provisions of this Paragraph 13.07 shall not be construed as a substitute for or a waiver of the provisions of any applicable statute of limitation or repose.

13.08 *Acceptance of Defective Work*

A. If, instead of requiring correction or removal and replacement of defective Work, Owner (and, prior to Engineer's recommendation of final payment, Engineer) prefers to accept it, Owner may do so. Contractor shall pay all claims, costs, losses, and damages (including but not limited to all fees and charges of engineers, architects, attorneys, and other professionals and all court or arbitration or other dispute resolution costs) attributable to Owner's evaluation of and determination to accept such defective Work (such costs to be approved by Engineer as to reasonableness) and the diminished value of the Work to the extent not otherwise paid by Contractor pursuant to this sentence. If any such acceptance occurs prior to Engineer's recommendation of final payment, a Change Order will be issued incorporating the necessary revisions in the Contract Documents with respect to the Work, and Owner shall be entitled to an appropriate decrease in the Contract Price, reflecting the diminished value of Work so accepted. If the parties are unable to agree as to the amount thereof, Owner may make a Claim therefor as provided in Paragraph 10.05. If the acceptance occurs after such recommendation, an appropriate amount will be paid by Contractor to Owner.

13.09 *Owner May Correct Defective Work*

A. If Contractor fails within a reasonable time after written notice from Engineer to correct defective Work or to remove and replace rejected Work as required by Engineer in accordance with Paragraph 13.06.A, or if Contractor fails to perform the Work in accordance with the Contract Documents, or if Contractor fails to comply with any other provision of the Contract Documents, Owner may, after seven days written notice to Contractor, correct or remedy any such deficiency.

B. In exercising the rights and remedies under this Paragraph 13.09, Owner shall proceed expeditiously. In connection with such corrective or remedial action, Owner may exclude Contractor from all or part of the Site, take possession of all or part of the Work and suspend Contractor's services related thereto, take possession of Contractor's tools, appliances, construction equipment and machinery at the Site, and incorporate in the Work all materials and equipment stored at the Site or for which Owner has paid Contractor but which are stored elsewhere. Contractor shall allow Owner, Owner's representatives, agents and employees, Owner's other contractors, and Engineer and Engineer's consultants access to the Site to enable Owner to exercise the rights and remedies under this Paragraph.

C. All claims, costs, losses, and damages (including but not limited to all fees and charges of engineers, architects, attorneys, and other professionals and all court or arbitration or other dispute resolution costs) incurred or sustained by Owner in exercising the rights and remedies under this Paragraph 13.09 will be charged against Contractor, and a Change Order will be issued incorporating the necessary revisions in the Contract Documents with respect to the Work; and Owner shall be entitled to an appropriate decrease in the Contract Price. If the parties are unable to agree as to the amount of the adjustment, Owner may make a Claim therefor as provided in Paragraph 10.05. Such claims, costs, losses and damages will include but not be limited to all costs of repair, or replacement of work of others destroyed or damaged by correction, removal, or replacement of Contractor's defective Work.

D. Contractor shall not be allowed an extension of the Contract Times because of any delay in the performance of the Work attributable to the exercise by Owner of Owner's rights and remedies under this Paragraph 13.09.

ARTICLE 14 - PAYMENTS TO CONTRACTOR AND COMPLETION

14.01 *Schedule of Values*

A. The Schedule of Values established as provided in Paragraph 2.07.A will serve as the basis for progress

Copyright © 2002 National Society of Professional Engineers for EJCDC. All rights reserved.

payments and will be incorporated into a form of Application for Payment acceptable to Engineer. Progress payments on account of Unit Price Work will be based on the number of units completed.

14.02 *Progress Payments*

A. Applications for Payments

1. At least 20 days before the date established in the Agreement for each progress payment (but not more often than once a month), Contractor shall submit to Engineer for review an Application for Payment filled out and signed by Contractor covering the Work completed as of the date of the Application and accompanied by such supporting documentation as is required by the Contract Documents. If payment is requested on the basis of materials and equipment not incorporated in the Work but delivered and suitably stored at the Site or at another location agreed to in writing, the Application for Payment shall also be accompanied by a bill of sale, invoice, or other documentation warranting that Owner has received the materials and equipment free and clear of all Liens and evidence that the materials and equipment are covered by appropriate property insurance or other arrangements to protect Owner's interest therein, all of which must be satisfactory to Owner.

2. Beginning with the second Application for Payment, each Application shall include an affidavit of Contractor stating that all previous progress payments received on account of the Work have been applied on account to discharge Contractor's legitimate obligations associated with prior Applications for Payment.

3. The amount of retainage with respect to progress payments will be as stipulated in the Agreement.

B. *Review of Applications*

1. Engineer will, within 10 days after receipt of each Application for Payment, either indicate in writing a recommendation of payment and present the Application to Owner or return the Application to Contractor indicating in writing Engineer's reasons for refusing to recommend payment. In the latter case, Contractor may make the necessary corrections and resubmit the Application.

2. Engineer's recommendation of any payment requested in an Application for Payment will constitute a representation by Engineer to Owner, based on Engineer's observations on the Site of the executed Work as an experienced and qualified design professional and on Engineer's review of the Application for Payment and the accompanying data and schedules, that to the best of Engineer's knowledge, information and belief:

a. the Work has progressed to the point indicated;

b. the quality of the Work is generally in accordance with the Contract Documents (subject to an evaluation of the Work as a functioning whole prior to or upon Substantial Completion, to the results of any subsequent tests called for in the Contract Documents, to a final determination of quantities and classifications for Unit Price Work under Paragraph 9.07, and to any other qualifications stated in the recommendation); and

c. the conditions precedent to Contractor's being entitled to such payment appear to have been fulfilled in so far as it is Engineer's responsibility to observe the Work.

3. By recommending any such payment Engineer will not thereby be deemed to have represented that:

a. inspections made to check the quality or the quantity of the Work as it has been performed have been exhaustive, extended to every aspect of the Work in progress, or involved detailed inspections of the Work beyond the responsibilities specifically assigned to Engineer in the Contract Documents; or

b. that there may not be other matters or issues between the parties that might entitle Contractor to be paid additionally by Owner or entitle Owner to withhold payment to Contractor.

4. Neither Engineer's review of Contractor's Work for the purposes of recommending payments nor Engineer's recommendation of any payment, including final payment, will impose responsibility on Engineer:

a. to supervise, direct, or control the Work, or

b. for the means, methods, techniques, sequences, or procedures of construction, or the safety precautions and programs incident thereto, or

c. for Contractor's failure to comply with Laws and Regulations applicable to Contractor's performance of the Work, or

d. to make any examination to ascertain how or for what purposes Contractor has used the moneys paid on account of the Contract Price, or

e. to determine that title to any of the Work, materials, or equipment has passed to Owner free and clear of any Liens.

5. Engineer may refuse to recommend the whole or any part of any payment if, in Engineer's opinion, it would be incorrect to make the representations to Owner stated in Paragraph 14.02.B.2. Engineer may also refuse to recommend any such payment or, because of subsequently discovered evidence or the results of subsequent

Copyright © 2002 National Society of Professional Engineers for EJCDC. All rights reserved.

inspections or tests, revise or revoke any such payment recommendation previously made, to such extent as may be necessary in Engineer's opinion to protect Owner from loss because:

a. the Work is defective, or completed Work has been damaged, requiring correction or replacement;

b. the Contract Price has been reduced by Change Orders;

c. Owner has been required to correct defective Work or complete Work in accordance with Paragraph 13.09; or

d. Engineer has actual knowledge of the occurrence of any of the events enumerated in Paragraph 15.02.A.

C. *Payment Becomes Due*

1. Ten days after presentation of the Application for Payment to Owner with Engineer's recommendation, the amount recommended will (subject to the provisions of Paragraph 14.02.D) become due, and when due will be paid by Owner to Contractor.

D. *Reduction in Payment*

1. Owner may refuse to make payment of the full amount recommended by Engineer because:

a. claims have been made against Owner on account of Contractor's performance or furnishing of the Work;

b. Liens have been filed in connection with the Work, except where Contractor has delivered a specific bond satisfactory to Owner to secure the satisfaction and discharge of such Liens;

c. there are other items entitling Owner to a set-off against the amount recommended; or

d. Owner has actual knowledge of the occurrence of any of the events enumerated in Paragraphs 14.02.B.5.a through 14.02.B.5.c or Paragraph 15.02.A.

2. If Owner refuses to make payment of the full amount recommended by Engineer, Owner will give Contractor immediate written notice (with a copy to Engineer) stating the reasons for such action and promptly pay Contractor any amount remaining after deduction of the amount so withheld. Owner shall promptly pay Contractor the amount so withheld, or any adjustment thereto agreed to by Owner and Contractor, when Contractor corrects to Owner's satisfaction the reasons for such action.

3. If it is subsequently determined that Owner's refusal of payment was not justified, the amount wrongfully withheld shall be treated as an amount due as determined by Paragraph 14.02.C.1.

14.03 *Contractor's Warranty of Title*

A. Contractor warrants and guarantees that title to all Work, materials, and equipment covered by any Application for Payment, whether incorporated in the Project or not, will pass to Owner no later than the time of payment free and clear of all Liens.

14.04 *Substantial Completion*

A. When Contractor considers the entire Work ready for its intended use Contractor shall notify Owner and Engineer in writing that the entire Work is substantially complete (except for items specifically listed by Contractor as incomplete) and request that Engineer issue a certificate of Substantial Completion.

B. Promptly after Contractor's notification, , Owner, Contractor, and Engineer shall make an inspection of the Work to determine the status of completion. If Engineer does not consider the Work substantially complete, Engineer will notify Contractor in writing giving the reasons therefor.

C. If Engineer considers the Work substantially complete, Engineer will deliver to Owner a tentative certificate of Substantial Completion which shall fix the date of Substantial Completion. There shall be attached to the certificate a tentative list of items to be completed or corrected before final payment. Owner shall have seven days after receipt of the tentative certificate during which to make written objection to Engineer as to any provisions of the certificate or attached list. If, after considering such objections, Engineer concludes that the Work is not substantially complete, Engineer will within 14 days after submission of the tentative certificate to Owner notify Contractor in writing, stating the reasons therefor. If, after consideration of Owner's objections, Engineer considers the Work substantially complete, Engineer will within said 14 days execute and deliver to Owner and Contractor a definitive certificate of Substantial Completion (with a revised tentative list of items to be completed or corrected) reflecting such changes from the tentative certificate as Engineer believes justified after consideration of any objections from Owner.

D. At the time of delivery of the tentative certificate of Substantial Completion, Engineer will deliver to Owner and Contractor a written recommendation as to division of responsibilities pending final payment between Owner and Contractor with respect to security, operation, safety, and protection of the Work, maintenance, heat, utilities, insurance, and warranties and guarantees. Unless Owner and Contractor agree otherwise in writing and so inform Engineer in writing prior to Engineer's issuing the definitive certificate of Substantial

Copyright © 2002 National Society of Professional Engineers for EJCDC. All rights reserved.

Completion, Engineer's aforesaid recommendation will be binding on Owner and Contractor until final payment.

E. Owner shall have the right to exclude Contractor from the Site after the date of Substantial Completion subject to allowing Contractor reasonable access to complete or correct items on the tentative list.

14.05 *Partial Utilization*

A. Prior to Substantial Completion of all the Work, Owner may use or occupy any substantially completed part of the Work which has specifically been identified in the Contract Documents, or which Owner, Engineer, and Contractor agree constitutes a separately functioning and usable part of the Work that can be used by Owner for its intended purpose without significant interference with Contractor's performance of the remainder of the Work, subject to the following conditions.

1. Owner at any time may request Contractor in writing to permit Owner to use or occupy any such part of the Work which Owner believes to be ready for its intended use and substantially complete. If and when Contractor agrees that such part of the Work is substantially complete, Contractor will certify to Owner and Engineer that such part of the Work is substantially complete and request Engineer to issue a certificate of Substantial Completion for that part of the Work.

2. Contractor at any time may notify Owner and Engineer in writing that Contractor considers any such part of the Work ready for its intended use and substantially complete and request Engineer to issue a certificate of Substantial Completion for that part of the Work.

3. Within a reasonable time after either such request, Owner, Contractor, and Engineer shall make an inspection of that part of the Work to determine its status of completion. If Engineer does not consider that part of the Work to be substantially complete, Engineer will notify Owner and Contractor in writing giving the reasons therefor. If Engineer considers that part of the Work to be substantially complete, the provisions of Paragraph 14.04 will apply with respect to certification of Substantial Completion of that part of the Work and the division of responsibility in respect thereof and access thereto.

4. No use or occupancy or separate operation of part of the Work may occur prior to compliance with the requirements of Paragraph 5.10 regarding property insurance.

14.06 *Final Inspection*

A. Upon written notice from Contractor that the entire Work or an agreed portion thereof is complete, Engineer will promptly make a final inspection with Owner and Contractor and will notify Contractor in writing of all particulars in which this inspection reveals that the Work is incomplete or defective. Contractor shall immediately take such measures as are necessary to complete such Work or remedy such deficiencies.

14.07 *Final Payment*

A. Application for Payment

1. After Contractor has, in the opinion of Engineer, satisfactorily completed all corrections identified during the final inspection and has delivered, in accordance with the Contract Documents, all maintenance and operating instructions, schedules, guarantees, bonds, certificates or other evidence of insurance certificates of inspection, marked-up record documents (as provided in Paragraph 6.12), and other documents, Contractor may make application for final payment following the procedure for progress payments.

2. The final Application for Payment shall be accompanied (except as previously delivered) by:

a. all documentation called for in the Contract Documents, including but not limited to the evidence of insurance required by Paragraph 5.04.B.7;

b. consent of the surety, if any, to final payment;

c. a list of all Claims against Owner that Contractor believes are unsettled; and

d. complete and legally effective releases or waivers (satisfactory to Owner) of all Lien rights arising out of or Liens filed in connection with the Work.

3. In lieu of the releases or waivers of Liens specified in Paragraph 14.07.A.2 and as approved by Owner, Contractor may furnish receipts or releases in full and an affidavit of Contractor that: (i) the releases and receipts include all labor, services, material, and equipment for which a Lien could be filed; and (ii) all payrolls, material and equipment bills, and other indebtedness connected with the Work for which Owner or Owner's property might in any way be responsible have been paid or otherwise satisfied. If any Subcontractor or Supplier fails to furnish such a release or receipt in full, Contractor may furnish a bond or other collateral satisfactory to Owner to indemnify Owner against any Lien.

B. *Engineer's Review of Application and Acceptance*

1. If, on the basis of Engineer's observation of the Work during construction and final inspection, and Engineer's review of the final Application for Payment and accompanying documentation as required by the Contract Documents, Engineer is satisfied that the Work has been completed and Contractor's other obligations

Copyright © 2002 National Society of Professional Engineers for EJCDC. All rights reserved.

under the Contract Documents have been fulfilled, Engineer will, within ten days after receipt of the final Application for Payment, indicate in writing Engineer's recommendation of payment and present the Application for Payment to Owner for payment. At the same time Engineer will also give written notice to Owner and Contractor that the Work is acceptable subject to the provisions of Paragraph 14.09. Otherwise, Engineer will return the Application for Payment to Contractor, indicating in writing the reasons for refusing to recommend final payment, in which case Contractor shall make the necessary corrections and resubmit the Application for Payment.

C. Payment Becomes Due

1. Thirty days after the presentation to Owner of the Application for Payment and accompanying documentation, the amount recommended by Engineer, less any sum Owner is entitled to set off against Engineer's recommendation, including but not limited to liquidated damages, will become due and , will be paid by Owner to Contractor.

14.08 *Final Completion Delayed*

A. If, through no fault of Contractor, final completion of the Work is significantly delayed, and if Engineer so confirms, Owner shall, upon receipt of Contractor's final Application for Payment (for Work fully completed and accepted) and recommendation of Engineer, and without terminating the Contract, make payment of the balance due for that portion of the Work fully completed and accepted. If the remaining balance to be held by Owner for Work not fully completed or corrected is less than the retainage stipulated in the Agreement, and if bonds have been furnished as required in Paragraph 5.01, the written consent of the surety to the payment of the balance due for that portion of the Work fully completed and accepted shall be submitted by Contractor to Engineer with the Application for such payment. Such payment shall be made under the terms and conditions governing final payment, except that it shall not constitute a waiver of Claims.

14.09 *Waiver of Claims*

A. The making and acceptance of final payment will constitute:

1. a waiver of all Claims by Owner against Contractor, except Claims arising from unsettled Liens, from defective Work appearing after final inspection pursuant to Paragraph 14.06, from failure to comply with the Contract Documents or the terms of any special guarantees specified therein, or from Contractor's continuing obligations under the Contract Documents; and

2. a waiver of all Claims by Contractor against Owner other than those previously made in accordance with the requirements herein and expressly acknowledged by Owner in writing as still unsettled.

ARTICLE 15 - SUSPENSION OF WORK AND TERMINATION

15.01 *Owner May Suspend Work*

A. At any time and without cause, Owner may suspend the Work or any portion thereof for a period of not more than 90 consecutive days by notice in writing to Contractor and Engineer which will fix the date on which Work will be resumed. Contractor shall resume the Work on the date so fixed. Contractor shall be granted an adjustment in the Contract Price or an extension of the Contract Times, or both, directly attributable to any such suspension if Contractor makes a Claim therefor as provided in Paragraph 10.05.

15.02 *Owner May Terminate for Cause*

A. The occurrence of any one or more of the following events will justify termination for cause:

1. Contractor's persistent failure to perform the Work in accordance with the Contract Documents (including, but not limited to, failure to supply sufficient skilled workers or suitable materials or equipment or failure to adhere to the Progress Schedule established under Paragraph 2.07 as adjusted from time to time pursuant to Paragraph 6.04);

2. Contractor's disregard of Laws or Regulations of any public body having jurisdiction;

3. Contractor's disregard of the authority of Engineer; or

4. Contractor's violation in any substantial way of any provisions of the Contract Documents.

B. If one or more of the events identified in Paragraph 15.02.A occur, Owner may, after giving Contractor (and surety) seven days written notice of its intent to terminate the services of Contractor:

1. exclude Contractor from the Site, and take possession of the Work and of all Contractor's tools, appliances, construction equipment, and machinery at the Site, and use the same to the full extent they could be used by Contractor (without liability to Contractor for trespass or conversion),

2. incorporate in the Work all materials and equipment stored at the Site or for which Owner has paid Contractor but which are stored elsewhere, and

Copyright © 2002 National Society of Professional Engineers for EJCDC. All rights reserved.

3. complete the Work as Owner may deem expedient.

C. If Owner proceeds as provided in Paragraph 15.02.B, Contractor shall not be entitled to receive any further payment until the Work is completed. If the unpaid balance of the Contract Price exceeds all claims, costs, losses, and damages (including but not limited to all fees and charges of engineers, architects, attorneys, and other professionals and all court or arbitration or other dispute resolution costs) sustained by Owner arising out of or relating to completing the Work, such excess will be paid to Contractor. If such claims, costs, losses, and damages exceed such unpaid balance, Contractor shall pay the difference to Owner. Such claims, costs, losses, and damages incurred by Owner will be reviewed by Engineer as to their reasonableness and, when so approved by Engineer, incorporated in a Change Order. When exercising any rights or remedies under this Paragraph Owner shall not be required to obtain the lowest price for the Work performed.

D. Notwithstanding Paragraphs 15.02.B and 15.02.C, Contractor's services will not be terminated if Contractor begins within seven days of receipt of notice of intent to terminate to correct its failure to perform and proceeds diligently to cure such failure within no more than 30 days of receipt of said notice.

E. Where Contractor's services have been so terminated by Owner, the termination will not affect any rights or remedies of Owner against Contractor then existing or which may thereafter accrue. Any retention or payment of moneys due Contractor by Owner will not release Contractor from liability.

F. If and to the extent that Contractor has provided a performance bond under the provisions of Paragraph 5.01.A, the termination procedures of that bond shall supersede the provisions of Paragraphs 15.02.B, and 15.02.C.

15.03 *Owner May Terminate For Convenience*

A. Upon seven days written notice to Contractor and Engineer, Owner may, without cause and without prejudice to any other right or remedy of Owner, terminate the Contract. In such case, Contractor shall be paid for (without duplication of any items):

1. completed and acceptable Work executed in accordance with the Contract Documents prior to the effective date of termination, including fair and reasonable sums for overhead and profit on such Work;

2. expenses sustained prior to the effective date of termination in performing services and furnishing labor, materials, or equipment as required by the Contract Documents in connection with uncompleted Work, plus fair and reasonable sums for overhead and profit on such expenses;

3. all claims, costs, losses, and damages (including but not limited to all fees and charges of engineers, architects, attorneys, and other professionals and all court or arbitration or other dispute resolution costs) incurred in settlement of terminated contracts with Subcontractors, Suppliers, and others; and

4. reasonable expenses directly attributable to termination.

B. Contractor shall not be paid on account of loss of anticipated profits or revenue or other economic loss arising out of or resulting from such termination.

15.04 *Contractor May Stop Work or Terminate*

A. If, through no act or fault of Contractor, (i) the Work is suspended for more than 90 consecutive days by Owner or under an order of court or other public authority, or (ii) Engineer fails to act on any Application for Payment within 30 days after it is submitted, or (iii) Owner fails for 30 days to pay Contractor any sum finally determined to be due, then Contractor may, upon seven days written notice to Owner and Engineer, and provided Owner or Engineer do not remedy such suspension or failure within that time, terminate the Contract and recover from Owner payment on the same terms as provided in Paragraph 15.03.

B. In lieu of terminating the Contract and without prejudice to any other right or remedy, if Engineer has failed to act on an Application for Payment within 30 days after it is submitted, or Owner has failed for 30 days to pay Contractor any sum finally determined to be due, Contractor may, seven days after written notice to Owner and Engineer, stop the Work until payment is made of all such amounts due Contractor, including interest thereon. The provisions of this Paragraph 15.04 are not intended to preclude Contractor from making a Claim under Paragraph 10.05 for an adjustment in Contract Price or Contract Times or otherwise for expenses or damage directly attributable to Contractor's stopping the Work as permitted by this Paragraph.

ARTICLE 16 - DISPUTE RESOLUTION

16.01 *Methods and Procedures*

A. Either Owner or Contractor may request mediation of any Claim submitted to Engineer for a decision under Paragraph 10.05 before such decision becomes final and binding. The mediation will be

Copyright © 2002 National Society of Professional Engineers for EJCDC. All rights reserved.

governed by the Construction Industry Mediation Rules of the American Arbitration Association in effect as of the Effective Date of the Agreement. The request for mediation shall be submitted in writing to the American Arbitration Association and the other party to the Contract. Timely submission of the request shall stay the effect of Paragraph 10.05.E.

B. Owner and Contractor shall participate in the mediation process in good faith. The process shall be concluded within 60 days of filing of the request. The date of termination of the mediation shall be determined by application of the mediation rules referenced above.

C. If the Claim is not resolved by mediation, Engineer's action under Paragraph 10.05.C or a denial pursuant to Paragraphs 10.05.C.3 or 10.05.D shall become final and binding 30 days after termination of the mediation unless, within that time period, Owner or Contractor:

1. elects in writing to invoke any dispute resolution process provided for in the Supplementary Conditions, or

2. agrees with the other party to submit the Claim to another dispute resolution process, or

3. gives written notice to the other party of their intent to submit the Claim to a court of competent jurisdiction.

ARTICLE 17 - MISCELLANEOUS

17.01 *Giving Notice*

A. Whenever any provision of the Contract Documents requires the giving of written notice, it will be deemed to have been validly given if:

1. delivered in person to the individual or to a member of the firm or to an officer of the corporation for whom it is intended, or

2. delivered at or sent by registered or certified mail, postage prepaid, to the last business address known to the giver of the notice.

17.02 *Computation of Times*

A. When any period of time is referred to in the Contract Documents by days, it will be computed to exclude the first and include the last day of such period. If the last day of any such period falls on a Saturday or Sunday or on a day made a legal holiday by the law of the applicable jurisdiction, such day will be omitted from the computation.

17.03 *Cumulative Remedies*

A. The duties and obligations imposed by these General Conditions and the rights and remedies available hereunder to the parties hereto are in addition to, and are not to be construed in any way as a limitation of, any rights and remedies available to any or all of them which are otherwise imposed or available by Laws or Regulations, by special warranty or guarantee, or by other provisions of the Contract Documents. The provisions of this Paragraph will be as effective as if repeated specifically in the Contract Documents in connection with each particular duty, obligation, right, and remedy to which they apply.

17.04 *Survival of Obligations*

A. All representations, indemnifications, warranties, and guarantees made in, required by, or given in accordance with the Contract Documents, as well as all continuing obligations indicated in the Contract Documents, will survive final payment, completion, and acceptance of the Work or termination or completion of the Contract or termination of the services of Contractor.

17.05 *Controlling Law*

A. This Contract is to be governed by the law of the state in which the Project is located.

17.06 *Headings*

A. Article and paragraph headings are inserted for convenience only and do not constitute parts of these General Conditions.

Copyright © 2002 National Society of Professional Engineers for EJCDC. All rights reserved.

SUPPLEMENTARY CONDITIONS

TABLE OF CONTENTS

PART I – AMENDMENTS TO THE GENERAL CONDITIONS

ARTICLE/SECTION NUMBER	TITLE
1	Definitions
2	Preliminary Matters
3	Contract Documents; Intent, Amending and Reuse
4	Availability of Lands; Physical Conditions Reference Points
5	Bonds and Insurance
6	Contractor's Responsibilities
8	Owner's Responsibilities
9	Engineer's Status During Construction
11	Change in Contract Price
12	Change in Contract Time
13	Warranty & Guarantee, Tests & Inspections, Correction, Removal or Acceptance of Defective Work
14	Payments to Contractor and Completion
15	Suspension of Work and Termination
16	Arbitration
17	Miscellaneous

PART II - STATUTORY REQUIREMENTS

1	Statutory Requirements in General
2	Deleted
3	Deleted
4	Safety & Health Regulations
5	Permits
6	Change Orders
7	Commonwealth of Mass. Laws Deemed Inserted.
8	Commonwealth of Mass./City of Quincy Equal Employment Opportunity Anti-Discrimination Requirements
9	City of Quincy Blasting Ordinance

SUPPLEMENTARY CONDITIONS – PART I

These Supplementary Conditions amend or supplement the Standard General Conditions of the Construction Contract, EJCDC® C-700 (2002 Edition), as indicated below. All provisions that are not so amended or supplemented remain in full force and effect.

The terms used in these Supplementary Conditions have the meanings stated in the General Conditions. Additional terms used in these Supplementary Conditions have the meanings stated below, which are applicable to both the singular and plural thereof.

The address system used in these Supplementary Conditions is the same as the address system used in the General Conditions, with the prefix "SC" added thereto.

ARTICLE 1 – DEFINITIONS AND TERMINOLOGY

SC 1.01(A)(17) Amend the second sentence of Paragraph 1.01(A)(17) to read as follows:

Shop Drawings and other Contractor submittals are not Drawings or Plans as so defined

SC 1.01(A)(44) Delete Paragraph 1.01 (A)(44) in its entirety and insert the following in its place:

An individual or entity, including filed sub-bidders, having a direct contract with Contractor or with any other Subcontractor for the performance of a part of the Work at the Site.

SC 1.01(A)(45) Add the following language to the end of the first sentence of Paragraph 1.01(A)(45):

,and either (i) the Work required by the Contract has been completed except for work having a contract price of less than one percent of the then-adjusted total Contract Sum, or (ii) substantially all of the Work has been completed and opened for public use except for minor incomplete or unsatisfactory work items that do not materially impair the usefulness of the Work required by the Contract.

SC-1.01. Add to the list of definitions in Paragraph 1.01.A by inserting the following as numbered items in their proper alphabetical positions:

Conditions of the Contract: The combined General Conditions and Supplementary Conditions

Plans: Shall have the identical definition as the term “Drawings” and may be used interchangeably in the Contract Documents.

Proposal: Shall have the identical definition as the term “Bid” and may be used interchangeably in the Contract Documents.

Site: The specific area adjacent to and including the area upon which the construction work is performed.

Lump Sum Work - Work to be paid for on the basis of a fixed fee for the materials, labor and all incidentals required to provide the bid item as defined in the specifications.

ARTICLE 2 – PRELIMINARY MATTERS

SC-2.01 Revise Paragraph 2.01A to read as follows:

Contractor shall deliver to the Owner, prior to execution of the Contract, such Bonds and Insurance as Contractor may be required to furnish.

SC-2.02 Revise Paragraph 2.02 to read as follows:

Owner shall furnish to Contractor up to five copies of the Contract Documents as are reasonably necessary for the execution of the Work. Additional copies will be furnished, upon request, at the cost of $100.00 per set.

SC-2.05 In the final line of Paragraph 2.05(A)(3), add the following after "Work:"

, which will be confirmed in writing by Contractor at the time of submission.

SC2.05(A)(3) Add a new paragraph immediately after paragraph 2.05(A)(3) of the General Conditions, which is to read as follows:

A(4). A complete listing of equipment and materials, and shall determine lead time between placing orders and delivery including normal allowances of time for processing and correcting Shop Drawings. The construction schedule shall reflect these delivery dates. All orders for long lead items shall be placed within thirty- (30) days after Effective Date of the Agreement if delivery is critical to scheduling. Failure to place orders promptly will result in full liability for liquidated damages if schedules are not met.

SC-2.05(C) Revise Paragraph 2.05(C) to read as follows:

C. Evidence of Insurance: Before any Work at the Site is started, Contractor shall deliver to the Owner, with copies of additional insured identified in the Supplementary Conditions, certificates of insurance (and other evidence of insurance which the Owner or any additional insured may reasonably request) which Contractor is required to purchase and maintain in accordance with Article 5.

SC-2.08 Insert new Paragraph 2.08 as follows:

2.08 Compliance with Laws. This Contract is subject to all Laws and Regulations of the United States of America, the Commonwealth of Massachusetts, the City of Quincy and other public authorities, and all amendments thereto, and where any requirements contained herein do not conform to nor are inconsistent with such Laws and Regulations to which the Contract is subject or by which it is governed, such Laws and Regulations shall have precedence over any matters set forth herein. Statutes, regulations, and portions and summaries thereof which are set forth or referred to in the Contract Documents shall be construed to include all amendments thereto effective as of the date of issuance of the Invitation to Bid for the Contract. The Owner makes no representation as to and assumes no responsibility for the correctness or completeness of such statutory matters referred to or set forth herein.

ARTICLE 3 - CONTRACT DOCUMENTS; INTENT, AMENDING,

SC-3.01 Add the following at the end of Paragraph 3.01(A):

The Contract Documents comprise the entire agreement between Owner and Contractor concerning the Work. The Contract Documents will be construed in accordance with the law of the Commonwealth of Massachusetts. If any term or provision of any of the Contract Documents, or the application thereof to any party or circumstance shall, to any extent, be determined to be invalid or unenforceable, the remaining provisions of the Contract Documents, or the application of such term or provision to parties or circumstances other than those as to which it is held invalid or unenforceable, shall not be affected thereby, and each term and provision of each of the Contract Documents shall be valid and shall be enforced to the fullest extent permitted by law.

SC-3.03 Insert new Paragraph 3.03(B)(1)(c) after Paragraph 3.03(B)(1)(b) as follows:

c. In the event of conflicts, inconsistencies or discrepancies among the Contract Documents or within any of the Contract Documents, to the extent applicable, the better quality or greater quantity of work shall be provided without change in the Contract Price. In the event of such conflicts, inconsistencies or discrepancies which do not relate to the quality or quantity of work, the Contractor shall request instructions or interpretations from the Engineer as provided in the Contract Documents, and shall be governed by the Engineer's directions.

SC-3.04 Add the following sentence at the end of Paragraph 3.04(A):

Contract Price and Contract Times (or Milestones) may only be changed by a Change Order or a Written Amendment.

ARTICLE 4 - AVAILABILITY OF LANDS; SUBSURFACE AND PHYSICAL CONDITIONS; HAZARDOUS ENVIRONMENTAL CONDITIONS; REFERENCE POINTS

SC-4.01 Delete Paragraph 4.01(B) in its entirety.

SC-4.02 In the first sentence of Paragraph 4.02(A) replace the term "Supplementary Conditions" with "Contract Documents."

SC-4.03 Delete Paragraph 4.03(A) and substitute the following:

A. Statutory Provisions Governs. Changes in the Work arising out of differing subsurface or latent physical conditions shall be governed by Massachusetts General Laws, Chapter 30, §39N.

4.03(C)(1)(a) Delete Paragraph 4.03(C)(1)(a) in its entirety.

4.03(C)(2)(c) Delete Paragraph 4.03(C)(2)(c) and substitute the following:

c. Contractor failed to give timely written notice as required by MGL C. 30, §39N.

SC-4.04 Add the following sentence at the end of Paragraph 4.04(B)(2):

However, Owner, Engineer and Engineer's Consultants shall not be liable to Contractor for any claims, losses, or damages (including but not limited to all fees and changes of engineers, architects, attorneys, and other professionals and all court or arbitration or other dispute resolution costs) sustained by Contractor or in connection with any other project or anticipated projects.

SC-4.06 In the first sentence of Paragraph 4.06(A), replace the term "Supplementary Conditions" with "Contract Documents".

SC4.06(B) Delete the second sentence of Paragraph 4.06(B) in its entirety.

SC4.06(G) Delete Paragraph 4.06(G) in its entirety.

ARTICLE 5 - BONDS AND INSURANCE

SC-5.01(C) In the sixth line of Paragraph 5.01(C), change "20 days" to "5 days".

SC-5.02 Delete the first sentence of Paragraph 5.02 and substitute the following:

All Bonds and insurance required of the Contractor by the Contract Documents shall be obtained from surety or insurance companies qualified to do business under the laws of the Commonwealth of Massachusetts and acceptable to the Owner. The premiums for all Bonds are to be included in the Contract Price and paid by the Contractor. All Bonds shall be executed in the required number of counterparts and shall be submitted to the Owner for insertion into the Contract Documents prior to the execution of the Agreement. The security required by Section 29 of Chapter 149 of the General Laws shall be provided exclusively by the Bonds referred to in this Paragraph 5.02 and not by any money retained by the Owner under other provisions of the Contract Documents, such retention being solely for the benefit of the Owner.

SC-5.04 In the second line of Paragraph 5.04(A) replace "is appropriate for the Work being performed" with "required by Paragraph 5.04(A)(7)".

SC5.04(A)(7) Insert new Paragraph 5.04(A)(7) as follows:

7. claims arising out of operation of Laws or Regulations for damages because of bodily injury or death of any person or for damage to property;

5.04(B)(1) Delete Paragraph 5.04(B)(1) in its entirety.

SC-5.04(C) Add the following new Paragraph 5.04(C) after Paragraph 5.04(B):

C. The insurance coverages to be maintained by the Contractor under this Paragraph shall include the following:

1 Workers' compensation insurance with statutory limits in accordance with applicable state laws. (including employer's liability insurance with a minimum limit per accident or disease not less than $1,000,000). The attention of the Contractor and all Subcontractors is drawn to M.G.L., Chapter 149 §34A concerning insurance requirements.

2 Commercial general liability insurance, including so-called comprehensive broad form endorsement, with limits, alone or in combination with "umbrella" excess liability insurance, not less than $1,000,000 per occurrence and aggregate for personal or bodily injury and $1,000,000 per occurrence and aggregate for property damage. A combined single limit per occurrence of $3,000,000 is acceptable. The commercial general liability insurance shall include, but not necessarily be limited to, coverage for:

(a) Premises - operations and completed operations liability (this coverage to be maintained for no less than two (2) years after final acceptance of the Project by Owner).

(b) Independent contractors, covering operations of any and all Subcontractors.

(c) Blanket contractual liability covering all liabilities assumed under the Contract Documents, including without limitation the Contractor's obligations to the Owner and the Engineer and their agents and employees as provided in Paragraph 6.20 of the Conditions of the Contract.

(d) Coverage for explosion, collapse, undermining and damage to underground utilities and property.

(e) Personal and advertising injury liability ($1,000,000 limit).

(f) Broad form coverage for damage to property of the Owner, as well as third parties, while in the care, custody or control of the Contractor.

3 Comprehensive automobile liability insurance with limits of not less than $1,000,000 for any person and $1,000,000 for any one accident for bodily injury including death and $1,000,000 for property damage covering:

(a) All owned vehicles.

(b) Hired cars and trucks.

(c) All other non-owned vehicles.

(d) Loading and unloading of any motor vehicle.

The Owner, Engineer and Engineer's subconsultants, such other parties as may be designated by the Owner shall be named as additional insured's in the policies of insurance and so identified on insurance binders or certificates evidencing insurance. Contractor shall deliver such insurance binders or certificates evidencing insurance (and such other evidence of insurance requested by Owner or any other additional insured) to Owner, with copies to each additional insured. All such policies shall contain

provisions or endorsements necessary to assure coverage of claims by one insured against another. All required insurance policies are to be endorsed to state that the Contractor's policies shall be primary to all other insurance available to the Owner and other specified additional insureds for liability arising out of or resulting from the Contractor's operations under the Contract, whether such operations are by Contractor, Subcontractor , anyone directly or indirectly employed by any of them, or anyone for whose acts any of them may be liable. The Owner is to be furnished originals or certified copies of the policy or policies including all endorsements required to provide stated coverage prior to execution of the Contract by the Contractor. The purchase of insurance to satisfy the above requirements, or the furnishing of insurance binders or certificates evidencing insurance, shall not be a satisfaction of Contractor's liability under this Contract or in any way modify Contractor's indemnification of the Owner.

S- 5.05 - 5.08 Delete Paragraphs 5.05 through 5.08 in their entirety and substitute the following Paragraph 5.05:

5.05 Property Insurance

Property insurance to the full insurable value of the Work will not be provided by the Owner in the form of 100% Builder's Risk, "all risk" or open peril or special causes of loss policy. Contractor shall obtain an installation floater in the full contract amount.

SC-5.09 Revise Paragraph 5.09 to read as follows:

A. If Owner has any objection to the coverage afforded by or other provisions of the Bonds or insurance required to be purchased and maintained by the Contractor in accordance with Article 5 on the basis of nonconformance with the Contract Documents, the objecting party shall so notify the other party in writing within 10 days after receipt of the certificates (or other evidence requested) required by paragraph 2.05.C. Contractor shall provide Owner such additional information in respect of insurance provided as the Owner may reasonably request. If the Contractor does not purchase or maintain all of the Bonds and insurance required of such party by the Contract Documents, the Contractor shall notify the Owner in writing of such failure to purchase prior to the start of the Work, or of such failure to maintain prior to any change in the required coverage. Without prejudice to any other right or remedy, the Owner may elect to obtain equivalent Bonds or insurance to protect it's interests at the expense of the Contractor and a Change Order shall be issued to adjust the Contract Price accordingly.

ARTICLE 6 – CONTRACTOR'S RESPONSIBILITIES

SC-6.01(B) Revise Paragraph 6.01(B) to read as follows:

At all times during the progress of the Work, Contractor shall assign a competent resident superintendent thereto who shall not be replaced except under extraordinary circumstances and upon prior written notice to the Owner. The superintendent will be Contractor's representative at the Site and shall have authority to act on behalf of Contractor. All communications given to or received from the superintendent shall be binding on Contractor.

SC6.01(B) Add the following at the end of Paragraph 6.01(B):

The Contractor's superintendent shall be satisfactory to the Engineer and the Owner and shall be replaced by the Contractor upon reasonable request by the Engineer or the Owner. The Contractor's superintendent shall keep a daily log of the progress of the Work and make this accessible to the Owner at all times; a copy shall be submitted to the Owner for its records upon completion of the Work. The Contractor shall furnish to both the Owner and Engineer the names, addresses and telephone numbers of his job superintendent, the job superintendents of all subcontractors and at least two other authorized representatives indicating where they may be contacted at times other than normal working hours in case of emergency. The Contractor's superintendent shall remain in attendance at the site, and, except for illness or other reason excusable to the Owner, shall be present at all times when Work of any kind is being done, including Work done during overtime. If absent for illness or other reason excusable to Owner, a replacement shall be named for the period of absence, such replacement having full authority and responsibility of the full-time superintendent. Upon written request by the Owner, the Contractor shall replace its Superintendent with an individual satisfactory to the Owner.

SC-6.02 Add the following to the end of Paragraph 6.02(A):

Whenever the engineer notifies the Contractor in writing that, in his opinion, any worker on the job employed by the Contractor, or any of his Subcontractors is incompetent, unfaithful, or otherwise unsatisfactory, such workers shall be discharged from the Contract Work and shall not be employed on it except with the written consent of the Engineer.

SC6.02(B) In Paragraph 6.02(B),. delete the remainder of the first sentence after the phrase "during regular working hours," and add to following at the end thereof:

Regular working hours shall be considered to be 7:00 a.m. through 6:00 p.m., Monday through Friday. Any work performed after regular working hours, on Saturdays or Sundays, or on state and federal holidays, shall be allowed only with express written permission of Owner. Requests to work at these times must be made in writing and received by the Engineer at least three (3) days prior to date work is to begin. Not allowing work outside of regular working hours as defined herein shall not be a basis for claims against the Owner. The attention of the Contractor and all Subcontractors is drawn to M.G.L., Chapter 149 §30 and 34 concerning duration of workday.

SC6.02(B) Add the following new Paragraph 6.02(C) at the end of Paragraph 6.02(B):

C. The Contractor shall furnish labor that can work in harmony with all other elements of labor employed or to be employed in the Work. The requirements and provisions of all applicable Laws and Regulations concerning the employment of labor (including without limitation Massachusetts General Laws, Chapter 149, §§ 26-27 and §29), and minimum wage rates established in accordance with law shall be a part of and are hereby incorporated by reference in these Conditions. Copies of the minimum wage rates are included in the Contract Documents. If it becomes necessary to employ any person in a trade or occupation not classified in the minimum wage rates included in the Contract Documents, the Contractor shall notify the Owner of his intention to employ persons in such unclassified trade or occupation in sufficient time for the Owner to obtain approved minimum wage rates for such trade or occupation. Such person shall be paid at not less than such rates as shall be determined by the Department of Labor and Industries or other proper officials in accordance with law, and such approved minimum wage rates shall be retroactive to the time of the initial employment of such person in such trade or occupation. The wage rates included in the Contract Documents are minimum rates only, and the Owner will not consider any claim for an increase in the Contract Price made by the Contractor because of payment by the Contractor of any wage rate in excess of the applicable rate contained in the Contract Documents or any increase in applicable rates. Such schedule of wage rates shall continue to be the minimum rates to be paid during the life of this Contract, and a legible copy of such schedule shall be kept posted in a conspicuous place at the site of the Work.

SC-6.03 Amend Paragraph 6.03(A) to read as follows:

Contractor shall furnish and assume full responsibility for all services, materials, equipment, labor, transportation, construction equipment and machinery, tools, appliances, fuel, power, light, heat, telephone, water, sanitary facilities, temporary facilities and all other facilities and incidentals necessary for the furnishing, performance, execution, testing, start-up and completion of the Work.

SC-6.05 Delete the first paragraph under Paragraph 6.05(A) in its entirety and substitute the following:

Reference in the Specifications or Drawings to any product, material, equipment, method or process by proprietary name, manufacturer, vendor, supplier, make or catalogue number shall be interpreted as establishing a standard of quality and function. An item will be considered an "or equal" item if (1) it is at least equal in quality, durability, appearance, strength and design to the item so named or described in the Specifications; (2) it will perform at least equally the function imposed by the general design for the Work; and (3) it conforms substantially, even with deviations, to the detailed requirements for the item named or described in the Specifications (See M.G.L. Chapter 30, Section 39M (b)). The Engineer shall be the sole judge of whether any proposed substitute product, material, equipment, process or method is an "or equal" item according to this standard, and the Engineer's decision shall be final and binding on the Contractor and any Subcontractor. After the Contract has been executed, the Owner and the Engineer will consider formal requests for the substitution of products in place of those specified only under the conditions set forth in the

Specifications and these Conditions. Any additional cost, or any loss or damage arising from the substitution of any material or any method for those originally specified shall be borne by the Contractor, including, without limitation, the costs of modifying documents , additional fees of the Owner's consultants or engineers, and the costs of data provided by Contractor in support of any proposed "or equal" or substitute item, notwithstanding approval or acceptance of such substitution by the Owner or the Engineer, unless such substitution was made at the written request or direction of the Owner or the Engineer.

SC6.05(A)(1) Delete Paragraphs 6.05(A)(1) its entirety.

SC6.05(A)(2) In the fourth line of Paragraph 6.05(A)(2)(a), change "Paragraph 6.05(A)(1)" to "Paragraph 6.05(A)".

SC-6.06 Add the following at the end of Paragraph 6.06(A):

The Contractor shall submit within ten (10) days following receipt of Notice of Award, a list of all suppliers and Subcontractors, with a description of the equipment or work they will provide.

SC6.06(F) Delete Paragraph 6.06(F) in its entirety.

SC6.06(G) Delete the second and third sentences of Paragraph 6.06(G) in their entirety.

SC-6.07 Add the following at the end of Paragraph 6.07(A):

At the Owner's option, Contractor shall defend all such claims in connection with any alleged infringement of such rights.

SC-6.08 Amend Paragraph 6.08 to read as follows:

The Contractor shall be responsible for obtaining all required permits and approvals relating to the construction of the project except as noted otherwise in the Contract Documents.

SC-6.09 Amend Paragraph 6.09(B) to read as follows:

If Contractor observes that the Specifications or Drawings are at variance with any Laws or Regulations, Contractor shall give Engineer prompt written notice thereof, and any necessary changes will be authorized by one of the methods set forth in Paragraph 3.04. If Contractor performs any Work knowing or having reason to know that it is contrary to Laws or Regulations, Contractor shall bear all claims, costs, losses, and damages (including but not limited to all fees and charges of engineers, architects, attorneys, and other professionals and all court or arbitration or other dispute resolution costs) arising out of or relating to such Work.

SC-6.09(C) Delete Paragraph in its entirety

SC-6.10 Delete Paragraph 6.10 and substitute the following:

A Section 6(f) of Chapter 64H of the Massachusetts General Laws exempts from Massachusetts sales tax building materials and supplies to be used in the Project, and

bidders shall not include in their bids any amount therefor. The words "building materials and supplies" shall include all materials and supplies consumed, employed or expended in the construction, reconstruction, alteration, remodeling or repair of any building, structure, public highway, bridge, or other such public work, as well as such materials and supplies physically incorporated therein. Said words shall also include rental charges for construction vehicles, equipment and machinery rented specifically for use on the Project site, or while being used exclusively for the transportation of materials for the Project. The number of the certificate granted by the Commissioner of Revenue for use in obtaining the exemption will be furnished to the Contractor upon request. The Contractor will not be paid for any sales taxes paid by the Contractor for which such exemption is or would have been applicable. The Contractor shall pay all sales, consumer, use and other similar taxes assessed upon the Work or portions thereof provided by the Contractor, or otherwise attributable to the Project, which are legally enacted at the time bids are received, whether or not yet effective, to which such exemption is not applicable.

SC-6.11 In Paragraph 6.11(A)(2), change "negotiation" to "agreement".

SC-6.12 Add new paragraph 6.12(B) as follows:

The attention of the Contractor and all Subcontractors is drawn to M.G.L., Chapter 30 §39R concerning retainment of records.

SC-6.13 Add the following at the end of Paragraph 6.13(B):

The Contractor shall have on the job and comply with the recommendations of the most recent edition of Industrial Bulletin No. 12, "Rules and Regulations for the Prevention of Accidents in Construction Operations" of the Commonwealth of Massachusetts Department of Labor and Industries, and the "Manual of Accident Prevention in Construction" of the Association of General Contractors. In the event the Contractor discovers any active utility line not disclosed in any plan or survey, he shall cease all Work in the immediate area which may affect such line, and shall promptly notify the Owner, the Engineer, and the affected utility company. The Contractor shall not restart Work without notice from and approval of the Engineer. The Owner places special emphasis on the protection of persons and existing structures, and there shall be no compromise as to the degree of protection required. The attention of the Contractor and all Subcontractors is drawn to M.G.L., Chapter 149§44F(1)(a) regarding weather protection of property.

SC-6.14 Add the following at the end of Paragraph 6.14:

This person shall be Contractor's superintendent unless otherwise designated in writing by Contractor to Owner.

SC-6.17 Add the following at the end of the first sentence of Paragraph 6.17(A):

, or for other appropriate action if so indicated in the Supplementary Conditions.

SC6.17(A)(1)(a) Replace the term "General Requirements" with "Section 013000 of the Contract Documents".

SC6.17(D)(3) Add to the end of the final sentence of Paragraph 6.17(D)(3) "or for errors or omissions in the Shop Drawings."

SC6.19(C)(7) Add a new Paragraph immediately following Paragraph 6.19 (C)(7) as follows:

8. Any acceptance by Owner or any failure to do so.

SC6.19(C)(8) Add a new Paragraph immediately following Paragraph 6.19(C)(8) as follows:

C. The Contractor guarantees that the work and services to be performed under the Contract, and all workmanship, materials and equipment performed, furnished, used or installed in the construction of the same shall be free from defects and flaws, and shall be performed and furnished in strict accordance with the Drawings, Specifications, and other Contract Documents, that the strength of all parts of all manufactured equipment shall be adequate and as specified and that the performance test requirements of the Contract shall be fulfilled. This guarantee shall be for a period of one year from and after the date of completion and acceptance of the work as issued by the Engineer. If part of the work is accepted in accordance with the Contract Documents, the guarantee for that part of the work shall be for a period of one year from the date fixed for such acceptance by the Engineer.

If at any time within the said period of guarantee any part of the work requires repairing, correction or replacement, the Owner may notify the Contractor in writing to make the required repairs, correction or replacements. If the Contractor neglects to commence making such repairs, corrections or replacements to the satisfaction of the Owner within ten (10) days from the date of receipt of such notice, or having commenced fails to prosecute such work to the Owner's satisfaction, the Owner may employ other persons to make said repairs, correction or replacements, including compensation for additional professional services, shall be paid by the Contractor.

SC-6.20 Insert the following in the second line of Paragraph 6.20(A) after the word "indemnify":

", defend with counsel designated by the insurer accepting liability for the claim or damage or, in lieu thereof, counsel acceptable to the Owner".

SC-6.20(A) Add a new Paragraph immediately after paragraph 6.20(A) as follows:

Without limiting the generality of the preceding paragraph, the Contractor hereby specifically agrees to indemnify, defend, and hold harmless the Owner from all such claims, losses or expenses which arise out of work-related injuries of employees of the Contractor or any of its Subcontractors or suppliers of any tier. It is the Owner intention that all financial risk of jobsite injuries be borne by the Contractor, and that the Owner have no financial responsibility, direct or indirect, for any such claims.

SC-6.20(C)(2) Add the following at the end of Paragraph 6.20(C)(2)

", provided however, that if the claim, cost, loss or damage referred to in this Paragraph 6.20 results from failure of the Engineer to discover a condition or object which is underground or otherwise not reasonably observable by the Engineer, and if said failure to discover either was or should have been apparent to the Contractor in that the said condition or object is omitted from the Engineer's maps, drawings, opinions,

reports, surveys, change orders, designs or specifications, then the Contractor shall be liable for indemnification of the Engineer and Owner under Paragraph 6.20 for claims, costs, losses and damages resulting from said failure to discover unless Contractor shall have notified Engineer of the existence and location of such condition or object prior to the occurrence of such claims, costs, losses and damages and in sufficient time for Engineer to have made provisions therefor."

ARTICLE 7 - OTHER WORK

SC-7.02 Add a new Paragraph immediately after Paragraph 7.02 as follows:

Owner shall perform other work related to the Project at the site by his own forces or let other direct contracts to have said work performed concurrently with Work under this Contract.

ARTICLE 8 - OWNER'S RESPONSIBILITIES

SC-8.02 Revise Paragraph 8.02(A) as follows:

In case of termination of the employment of Engineer, Owner shall appoint a new engineer whose status under the Contract Documents shall be that of the former Engineer.

SC-8.06 Delete Paragraph 8.06.

ARTICLE 9 - ENGINEER'S STATUS DURING CONSTRUCTION

SC-9.03 In Paragraph 9.03(A) insert "and duties" after "responsibilities".

Add the following sentence to the end of Paragraph 9.03: Unless otherwise agreed, the responsibilities and duties and authority and limitations of the Resident Project Representative shall be contained in "Duties, Responsibilities and Limitations of Authority of Resident Project Representative," EJCDC Document No. 1910-1-A [(1983] edition). Additionally, Owner may designate a Resident Project Representative or Resident Engineer to observe the performance of the Work. It shall be the duty of the Resident Project Representative to observe the Work and render decisions as to its acceptability. The responsibilities and limitations of authority of the Resident Project

Representative shall be the same as set forth in Article 9 of the General Conditions.

SC-9.08 Add the following new Paragraph 9.08(E) as follows:

Pursuant to Massachusetts General Laws, Chapter 30, §39P, the Engineer will render decisions on interpretation of the Specifications, approval of equipment, material or any other approval, or progress of the Work promptly and, in any event, no later than thirty (30) days after the written submission for decision; but if such decision requires extended investigation and study, the Engineer shall, within thirty (30) days after the receipt of the submission, give the party making the submission written notice of the reasons why the decision cannot be made within the thirty-day period and the date by which the decision will be made. Either party to the Contract may make written submission to the Engineer for such decisions.

ARTICLE 10 - CHANGES IN THE WORK; CLAIMS

SC-10.02 Add the following new paragraph 10.02(B) as follows:

The attention of the Contractor and all Subcontractors is drawn to M.G.L., Chapter 30 §39I concerning deviations from plans and specifications.

SC-10.05 Revise Paragraph 10.05(B) as follows:

B. Notice: The Contractor shall deliver written notice stating the general nature of each Claim, dispute, or other matter to Engineer and the Owner to the Contract promptly (but in no event later than 14 days) after the start of the event giving rise thereto. Contractor's failure to comply with this notice requirement shall constitute a waiver of the Claim. Notice of the amount or extent of the Claim, dispute, or other matter with supporting data shall be delivered to the Engineer and the Owner to the Contract within 30 days after the start of such event (unless Engineer allows additional time for claimant to submit additional or more accurate data in support of such Claim, dispute, or other matter). A Claim for an adjustment in Contract Price shall be prepared in accordance with the provisions of paragraph 12.01.B. A Claim for an adjustment in Contract Time shall be prepared in accordance with the provisions of paragraph 12.02.B. Each Claim shall be accompanied by Contractor's written statement that the adjustment claimed is the entire adjustment to which the Contractor believes it is entitled as a result of said event.

ARTICLE 11 - COST OF THE WORK

SC-11.03 Delete Subparagraphs 11.0.3(D)(1), (2) and (3), and substitute the following:

11.0.3(D) When the accepted quantity of any item of Unit Price Work performed by the Contractor differs from the estimated quantity of such item in the Contractor's bid schedule, payment shall be made at the original Contract Unit Price for the accepted quantity of work done. No adjustment or allowance will be made for any increased expenses, loss of expected reimbursement or loss of anticipated profits suffered or claimed by the Contractor resulting either directly or indirectly from such increased or decreased quantities, or from unbalanced allocation among the Contract items of overhead expense on the part of the bidder and subsequent loss of expected reimbursements therefor, or from any other cause.

ARTICLE 12 - CHANGE OF CONTRACT PRICE; CHANGE OF CONTRACT TIMES

SC-12.01 In Paragraph 12.01(C)(2)(a) change "15" to "10".

SC-12.01(C)(2)(c) In Paragraph 12.01(C)(2)(c) change "15" to "10"

SC-12.01(C)(2)(e) In Paragraph 12.01(C)(2)(e) change "five" to "ten".

SC12.02-03 Delete Paragraphs 12.02 through 12.03 and substitute the following:

12.02 Change of Contract Times. If the Contractor is delayed in the commencement, prosecution or completion of the Work by any act or omission of the Owner or the Engineer, or an employee of either, or a separate contractor employed by the Owner (except when the contract with such separate contractor has been assigned to the Contractor), or by changes in the Work duly ordered by the Owner, or by strikes, acts of war or terrorism, unusually severe weather not anticipatable and preventing any continuation of operations by the Contractor, unavoidable casualties, or such other unforeseeable causes as are beyond the control of the Contractor and are not caused in whole or in part by any fault or negligence of the Contractor (other than delays occasioned by financial difficulties of the Contractor), then, except as provided in Paragraph 12.04 in the case of certain delays caused by the Owner, the Contractor's sole remedy shall be that the Contract Time (or Milestone) shall be extended by Change Order for such reasonable period of time, if any, as the Engineer may determine is required due to the nature of the delay, all subject to the provisions of this Article 12, and the Contractor shall not be entitled to claim damages or any increase in the Contract Price on account of such delay. The procedures set forth in, and all other provisions contained in, this Article 12 are in addition to the provisions of the Contract Documents relating to procedures for Change Orders.

12.03 Notice. The Contractor shall notify the Engineer as soon as possible of any cause that may delay the Work. The Contractor shall give written notice to the Engineer within ten (10) days after the time that he knows or should know of any cause which will result (or has resulted) in delay for which he claims or intends to claim an extension of the Contract Time (or Milestone) (including those causes which the Owner or the Engineer is responsible for or has knowledge of). Any such written notice shall (1) state that an extension is claimed; (2) identify the cause of delay; and (3) describe as fully as practicable at the time the nature and expected duration of the delay and its effect on the various portions of the Work. The submission of such written notice within the time period provided above shall be a condition precedent to any extension of the Contract Time (or Milestone). Failure to submit such written notice shall constitute a waiver of such extension of the Contract Time (or milestone).

12.04 Statutory Provisions. The following clauses (a) and (b) of this Paragraph 12.3 are included herein pursuant to requirements of Massachusetts General Laws, Chapter 30, §39O. In the event that suspension, delay, interruption or failure to act of the Owner increases the cost of performance to any Subcontractor, the Subcontractor shall have the same rights against the Contractor for payment for an increase in the cost of his performance as provisions (a) and (b) give the Contractor against the Owner, but nothing in provisions (a) and (b) shall in any way change, modify or alter any other rights which the Contractor or the Subcontractor may have against each other.

(a) The Owner may order the Contractor in writing to suspend, delay, or interrupt all or any part of the Work for such period of time as it may determine to be appropriate for the convenience of the Owner; provided, however, that if there is a suspension, delay or interruption for fifteen days or more or due to a failure of the Owner to act within the time specified in this Contract, the Owner shall make an adjustment in the Contract Price for any increase in the cost of performance of this Contract but shall not include any profit to the Contractor on such increase; and provided further, that the Owner shall not make any adjustment in the Contract Price under this provision for any suspension, delay, interruption or failure to act to the extent that such is due to any cause for which this Contract provides for an equitable adjustment of the Contract Price under any other contract provisions.

(b) The Contractor must submit the amount of a claim under provision (a) to the Owner in writing as soon as practicable after the end of the suspension, delay, interruption or failure to act and, in any event, not later than the date of final payment under this Contract and, except for costs due to a suspension order, the Owner shall not approve any costs in the claim incurred more than twenty (20) days before the Contractor notified the Owner in writing of the act or failure to act involved in the claim.

ARTICLE 13 - TESTS AND INSPECTIONS; CORRECTION, ETC.

SC-13.01 Delete Paragraph 13.01 and substitute the following:

13.01 Defective Work. Contractor warrants and guarantees to Owner and Engineer that all Work will be in accordance with the Contract Documents and will not be defective. Prompt notice of all defective work of which Owner or Engineer has actual knowledge shall be given to Contractor. All defective work may be rejected, corrected or accepted as provided in this Article 13. The Contractor shall obtain and preserve for the benefit of the Owner manufacturer's warranties on materials incorporated into the Work, and the Contractor shall prepare and execute a written guarantee and warranty applicable to all phases of the Work in accordance with the provisions of this Paragraph 13.01 and all other applicable provisions of the Contract Documents pertaining to warranties and guarantees, and shall also secure and pass through to the Owner written guarantees and warranties prepared in a similar manner from each Subcontractor engaged in the performance of the Work and, prior to Substantial Completion, shall deliver two (2) sets of all such guarantees and warranties to the Engineer for review. All materials, equipment and supplies requiring replacement during any guarantee period specified in the Contract Documents shall be subject to a supplementary guarantee and warranty extending the guarantee period to cover all such items for the full guarantee period specified, beginning as of the date of acceptance of each such replacement item or element of work. The warranty and guarantee provisions of this Paragraph 13.01 shall be in addition to and not in limitation of any other warranties, guarantees or remedies allowed by law or the Contract Documents.

SC-13.02 Add the following after Paragraph 13.02:

13.02(B) Inspection by State and Federal Officials. Representatives of the State and Federal Government shall have access to the Work wherever it is in preparation or progress. The Contractor shall provide facilities for access and inspection.

SC-13.03(A) Add the following at the end of Paragraph 13.03(A):

Contractor shall furnish written information to Engineer stating the original sources of supply of all materials procured or manufactured away from the actual site of the Work. In order to ensure a proper time sequence for required inspection and approval, this information shall be furnished at least two (2) weeks (or as otherwise directed by Engineer) in advance of the incorporation in the Work of any such materials.

SC-13.03(B)(4) Add as new Subparagraph 13.03(B)(4) the following:

4. and; the costs of tests, inspections and approvals related to remedial operations performed to correct defective Work shall be borne by Contractor.

SC-13.03(C) Insert at the end of Paragraph 13.03(C) the following:

All inspections, tests or approvals other than those required by Laws and Regulations of any public body having jurisdiction shall be performed by organizations acceptable to Owner, Contractor and Engineer.

SC-13.03(E) In the first line of Paragraph 13.03(E), change "or" to "including".

SC-13.03(F) Revise Paragraph 13.03(F) to read as follows:

F. Uncovering Work as provided in paragraph 13.03E shall be at Contractor's expense.

SC-13.03(G) Insert new Paragraph 13.03(G) as follows:

G. Neither observations by Engineer nor inspections, tests or approvals by others shall relieve Contractor from Contractor's obligations to perform the work in accordance with the Contract Documents.

SC-13.07(B) At the end of Paragraph 13.07(B) add the following:

Or may be deducted from amounts otherwise due the Contractor.

At the end of Paragraph 13.07(D) add the following:

Or may be deducted from amounts otherwise due the Contractor, and the terms of this Paragraph 13.07 will continue to apply.

SC-13.09(A) Revise paragraph 13.09(A) to read as follows:

A. If Contractor fails after written notice from Engineer or Owner to correct defective Work or to remove and replace rejected Work as required by Engineer in accordance with paragraph 13.06.A, or if Contractor fails to perform the Work in accordance with the Contract Documents, or if Contractor fails to comply with any other provision of the Contract Documents, Owner may, immediately, correct and remedy any such deficiency.

ARTICLE 14 - PAYMENTS TO CONTRACTOR AND COMPLETION

SC-14.02(A)(1) Insert the following at the end of the first sentence of Paragraph 14.02(A)(1):

", or by the Owner or the Engineer, including, without limitation, evidence of payment by Contractor for all materials and equipment included in such Application for Payment."

SC-14.02(A)(4) Add the following new Paragraph 14.02(A)(4) after Paragraph 14.02(A)(3):

Payments will be made in accordance with Massachusetts General Laws, Chapter 30, §39K. The attention of the Contractor and all Subcontractors is drawn to M.G.L., Chapter 30 §39F(a)-(i) concerning Contractor's payment to Subcontractors and Owner's obligations in regard to Subcontractors' payment. The attention of the Contractor and all Subcontractors is drawn to Massachusetts General Laws, Chapter 266, §§67A, 67B and 67C, and Chapter 93, §9B, concerning penalties for false or fraudulent claims, representations and records.

SC-14.02(B)(1) Add the following to the end of Paragraph 14.02(B)(1):

The Contractor's sole remedy for the Engineer's delay in approving a progress payment or the Owner's delay in paying the Contractor shall be the payment of interest as provided in Massachusetts General Laws, Chapter 30, §§39F.

SC14.02(B)(4)(e)Add the following to the end of Paragraph 14.02(B)(4)(e):

Except to the extent otherwise provided in the Contract Documents.

SC-14.02(C)(1) Delete Paragraph 14.02(C)(1) and replace with the following:

Fifteen (15) days after presentation of the Application for Payment to Owner with Engineer's recommendation, the amount recommended will (subject to the provisions of Paragraph 14.02(D)) become due, and when due will be paid by Owner to Contractor.

SC-14.02(D)(1)(b)In the fourth line of Paragraph 14.02(D)(1)(b), add the following:

and provides an indemnity satisfactory to Owner for all claims, costs, losses and damages arising out of the Liens,

SC-14.02(D)(3) Delete Paragraph 14.02(D)(3) in its entirety.

SC-14.05 Add Paragraph 14.05(A)(5) as follows:

3. Owner may at any time request Contractor in writing to permit Owner to take over operation of any such part of the Work although it is not substantially complete. A copy of such request will be sent to Engineer and, within a reasonable time thereafter, Owner, Contractor and Engineer shall make an inspection of that part of the Work to determine its status of completion and will prepare a list of the items remaining to be completed or corrected thereon before final payment. If Contractor does not object in writing to Owner and Engineer that such part of the Work is not ready for separate operation by Owner, Engineer will finalize the list of items to be completed or corrected and will deliver such list to Owner and Contractor together with a written recommendation as to the division of responsibilities pending final payment between Owner and Contractor with respect to security, operation, safety, maintenance, utilities, insurance, warranties and guarantees for that part of the Work which will become binding upon Owner and Contractor at the time when Owner takes over such operation (unless they shall have otherwise agreed in writing and so informed Engineer). During such operation and prior to Substantial Completion of such part of the Work, Owner shall allow Contractor reasonable access to complete or correct items on said list and to complete other related Work.

SC-14.07 In the tenth line of Paragraph 14.07(A)(1), insert the following after "documents,":

and Engineer has indicated that the Work is acceptable (subject to the provisions of Paragraph 14.09),

Revise Paragraph 14.07(C) to read as follows:

1. Payment under this paragraph shall be made in the time specified by MGL C. 30, § 39K.

SC-14.10 Add Paragraph 14.10 as follows:

14.10 Contractor's Continuing Obligation. Contractor's obligation to perform and complete the Work in accordance with the Contract Documents shall be absolute. Neither: (i) recommendation of any progress of final payment by Engineer, (ii) the issuance of a certificate of Substantial Completion, (iii) any payment by Owner to Contractor under the Contract Documents, (iv) any use or occupancy of the Work or any part thereof by Owner, (v) any act of acceptance by Owner or any failure to do so, (vi) any review and approval of a Shop Drawing or sample submission, (vii) the issuance of a notice of acceptability by Engineer pursuant to Paragraph 14.07, nor (viii) any correction of defective Work by Owner will constitute an acceptance of Work not in accordance with the Contract Documents, or a release of Contractor's obligation to perform the Work in accordance with the Contract Documents (except as provided in Paragraph 14.09).

ARTICLE 15 - SUSPENSION OF WORK AND TERMINATION

SC-15.01 Delete Paragraph 15.01(A) in its entirety and substitute the following:

Owner may, at any time and without cause order the Contractor in writing to suspend, delay, or interrupt all or any part of the work for such period of time as it may determine to be appropriate for the convenience of the Owner; provided, however, that if there is a suspension, delay or interruption for fifteen days or more or due to a failure of the Owner to act within the time specified in this Contract, the Owner shall make an adjustment in the contract price for any increase in the cost of performance of this Contract but shall not include any profit to the general contractor on such increase; and provided further, that the Owner shall not make any adjustment in the contract price under this provision for any suspension, delay, interruption or failure to act to the extent that such is due to any cause for which this Contract provides for an equitable adjustment of the contract price under any other Contract provision.

SC-15.02 In Paragraph 15.02(A)(1) line one, delete the word "persistent".

SC-15.02(A)(4) Insert the following after Subparagraph 15.02(A)(4) as Subparagraphs 15.02(A)(5) through 15.02(A)(9):

5. if Contractor commences a voluntary case under any chapter of the Bankruptcy Code (Title 11, United States Code), as now or hereafter in effect, or if Contractor takes any equivalent or similar action by filing a petition or otherwise under any other federal or state law in effect at such time relating to the bankruptcy or insolvency; or

6. if a petition is filed against Contractor under any chapter of the Bankruptcy Code as now or hereafter in effect at the time of filing, or if a petition is filed seeking any such equivalent or similar relief against Contractor under any other federal or state law in effect at the time relating to bankruptcy or insolvency; or

7. if Contractor makes a general assignment for the benefit of creditors; or

8. if a trustee, receiver, custodian or agent of Contractor is appointed under applicable law or under contract, whose appointment or authority to take charge of property of Contractor is for the purpose of enforcing a Lien against such property or for the purpose of general administration of such property for the benefit of Contractor's creditors; or

9. if Contractor admits in writing an inability to pay its debts generally as they become due.

SC-15.03(A) In the third line of Paragraph 15.03(A), insert "abandon the Work and" after "elect to".

SC-15.03(A)(3) In the second line of Paragraph 15.03(A)(3), insert the word "reasonable" after the work "all".

SC-15.04 Delete Paragraph 15.04 in its entirety.

ARTICLE 16 - DISPUTE RESOLUTION

SC-16.01 Delete Paragraph 16.01 in its entirety and replace with the following:

16.01 All claims, disputes or other matters in controversy between the Contractor and the Owner relating to the execution and progress of the Work or the interpretation of the Contract Documents, which cannot be resolved by agreement between them, shall be referred to the Engineer in writing, with a copy to the other party, for determination. The Engineer shall afford both parties a reasonable opportunity to present evidence in support of their respective positions. The Engineer shall render his decision in writing to each of the parties within a reasonable time.

16.02 No such claim, dispute or other matter shall constitute grounds for the Contractor to delay progress of the Work, and the Contractor shall carry on the Work and maintain its progress during consideration of any such claim, dispute or other matter by the Engineer. The decision of the Engineer with respect to any and all such claims, disputes or other matters in questions shall be final and conclusive, subject to the provisions of Paragraph 16.03 below.

16.03 The decision of the Engineer on any such claim, dispute or other matter in question shall be final and binding upon the Owner and the Contractor unless the Owner or the Contractor gives written notice to the other and to the Engineer of its objection to such decision within ten (10) days after receipt by such aggrieved party of the Engineer's decision.

16.04 In the event that either party is aggrieved by the decision of the Engineer, the dispute resolution procedures set forth below shall be followed:

A. The Owner and Contractor intend to endeavor to resolve claims, disputes and other matters in question between them by negotiation and mediation which, unless the parties mutually agree otherwise, shall be in accordance with the Construction Industry Mediation Rules of the American Arbitration Association currently in effect. Request for mediation shall be filed in writing with the other party to this Contract and with the American Arbitration Association. Under no circumstances shall the Contractor have the right to stop the performance of the Work pending the resolution of a dispute between the parties.

B. The parties shall share the mediator's fee and any filing fees equally. The mediation shall be held in Boston, Massachusetts, unless another location is mutually agreed upon. Agreements reached in mediation shall be enforceable as settlement agreements in any Court having jurisdiction thereof.

C. If negotiation or mediation fail to bring about resolution, then, at the Owner's sole discretion, any claim, dispute or other matter in question arising out of or related to this Contract shall be subject to arbitration.

D. If the Owner in its sole discretion elects to arbitrate, such arbitration shall be in accordance with the Construction Industry Arbitration Rules of the American Arbitration Association currently in effect. The demand for arbitration shall be filed in writing with the other party to this Contract and with the American Arbitration Association.

E. A demand for arbitration shall be made within reasonable time after the claim, dispute or other matter in question has arisen. In no event shall the demand for arbitration be made after the date when institution of legal or equitable proceedings based on such claim, dispute or other matter in question would be barred by the applicable statute of limitations.

F. The award rendered by the arbitrator or arbitrators shall be final, and judgment may be entered upon it in accordance with the applicable law in any court having jurisdiction thereof.

G. Arbitration, under this Contract, shall be consolidated with the arbitration proceedings between other parties if such arbitration proceedings arise out of the same transaction or relate to the same subject matter. Consolidation shall be by order of the arbitrator(s) in any pending case, or if the arbitrator(s) fail to make an order, a party may apply to a court of competent jurisdiction for such order. Any arbitration proceeding shall take place in Boston, Massachusetts.

H. The Contractor will require each of its subcontractors to have a similar arbitration clause in their respective subcontract. The foregoing agreement to arbitrate and other agreements to arbitrate with an additional person or entity shall be specifically enforceable in accordance with applicable law in any court having jurisdiction thereof.

I. If the Owner in its sole discretion declines to arbitrate, such claims, disputes and other matters shall be decided by a court of the Commonwealth of Massachusetts having jurisdiction thereof. This Contract shall be governed by the laws of the Commonwealth of Massachusetts.

J. Notwithstanding any provision contained in this Article or elsewhere in the Contract Documents, the Owner reserves the following rights in connection with claims and disputes between the Owner and the Contractor:

1. The right to institute legal action against the Contractor in any Court of competent jurisdiction in lieu of demanding arbitration pursuant to this Article, in which case the dispute or disputes which are the subject of such action shall be decided by such court, and not by arbitration.

2. The right to obtain from any Court of competent jurisdiction a stay of any arbitration instituted by the Contractor, provided that the application for such stay is made before the appointment of the neutral arbitrator in such arbitration, in which case the dispute or disputes which are the subject of such arbitration shall be decided by such court, and not by arbitration.

3. The right to require the Contractor to join as a party in any arbitration between the Owner and the Engineer relating to the Project, in which case the Contractor agrees to be bound by the decision of the arbitrator or arbitrators in such arbitration.

INTENTIONALLY BLANK

SUPPLEMENTARY CONDITIONS - PART II

ARTICLE 1 STATUTORY REQUIREMENTS IN GENERAL

1.1 The Contractor shall keep himself fully informed of all existing and future State and Federal Laws and Municipal Ordinances and Regulations in any manner affecting those engaged or employed in the work or in any way affecting the conduct of the work, and of all such orders and decrees of bodies or tribunals having jurisdiction or authority over same and of all provisions required by law to be made a part of this contract, all of which provisions are hereby incorporated by reference and made a part thereof. If any discrepancy or inconsistency is discovered in the drawings or specifications or contract documents for this work in relation to any such law, ordinance, regulation, order or decree, he shall forthwith report the same to the Engineer in writing. He shall at all times himself observe and comply with, and shall cause all his agents and employees to observe and comply with, all such existing and future laws, ordinances, regulations, orders and decrees; and he shall protect and indemnify the City and Engineer and all of its and their officers, agents and servants against any claim of liability arising from or based on the violation of any such law, ordinance, regulation, order or decree, whether by himself or his employees or sub-contractors.

1.2 All materials furnished and work done are to comply with all State, Federal and local laws and regulations.

1.3 All applicable laws, ordinances, and rules and regulations of all authorities having jurisdiction over the construction of the project shall apply to the contract throughout.

ARTICLE 2 DELETED

ARTICLE 3 DELETED

ARTICLE 4 SAFETY AND HEALTH REGULATIONS

4.1 The Successful Bidder shall comply with the Department of Labor Safety and Health Regulations for Construction promulgated under the Occupational Safety and Health Act of 1970 (PS-91-569) and under Section 107 of the Contract Work Hours and Safety Standards Act (PL-91-54).

4.2 This project is subject to the Safety and Health Regulations of the Massachusetts Department of Labor and Industries, Division of Industrial Safety "Rules and Regulations for the Prevention of Accidents in Construction Operations (Chapter 454 CMR, 10.0 et. seq.)".

4.3 This project is subject to all of the Safety and Health Regulations (CFR, Part 1926, and all subsequent amendments) as promulgated by the U.S. Department of Labor on June 24, 1974

and CFR 29, Part 1910, General Industry Safety and Health Regulations Identified as Applicable to Construction.

4.4 The Successful Bidder shall have a competent person or persons, as required under the Occupational Safety and Health Act on the site to inspect the work and to supervise the conformance of the work with the regulations of the Act.

4.5 All excavations within public or private ways are subject to the requirements of the Massachusetts General Law, Acts of 1983, Chapter 353, included in Part II of the Supplementary Conditions.

ARTICLE 5 PERMITS AND LICENSES

5.1 Deleted

5.2 The Contractor shall procure all permits and licenses required, pay all charges and fees therefore, and shall give all notices necessary and incidental to the due and lawful prosecution of the Project. The cost thereof shall be included in the prices bid for the various items listed in the proposal.

The permits shall also include all building and other permits required for his equipment, work force or particular operations (such as blasting or local street opening permits), in the performance of the work.

ARTICLE 6 CHANGE ORDERS

6.1 Change Orders will be completed by the Contractor using the form enclosed on the following page. The City will **not** accept any other form as a substitute.

(continued on next page)

City of Quincy, Massachusetts
Purchasing Department
1305 Hancock Street, Quincy, MA 02169

Phone #: 376-1060
Fax #: 376-1074

CHANGE ORDER/AMENDMENT #_____

Made in Quintuplicate this day (DATE)_____ between the City of Quincy, Massachusetts, a Municipal Corporation, within the County of Norfolk, Party of the first part and:(pring name & address of Company below)

party of the second part.

WITNESSETH: That for and in consideration of the following mutual covenants contained herein the parties agree to amend Contract # _____ Of the City of Quincy, dated _____ between the same parties as follows:

ARTICLE I: In Article I, we are INCREASING/DECREASING the Contract by $_____
Because: (list below reason)
Justification:_____(Attached - Refer to Page 2)_____

ARTICLE II: In Article II of the Contract, for (SPECIFY COMMODITY) _____

between the same parties, strike out the words and figures: $_____

_____
AMOUNT IN WORDS

and substitute the words and figures: $_____

_____
AMOUNT IN WORDS

WITNESS:

_____
WITNESS (CITY OF QUINCY)

Sufficient funds are available to cover this change order in the contract account to be charged.

_____
CITY AUDITOR

_____
VENDOR SIGNATURE

_____
COMMISSIONER OF PUBLIC WORKS

CITY OF QUINCY

_____
MAYOR

_____
CITY SOLICITOR

_____
PURCHASING AGENT

DEPT.:_____

P.O. #: _____

CODE: _____

PROJECT NAME: _____

PROJECT NUMBER: _____

CONTRACT # : _____

CHANGE ORDER # : _____

CONTRACT AMOUNT: (As bid): _____

CHANGE IN CONTRACT PRICE (this change order): _____

TOTAL ADJUSTED CONTRACT PRICE (including all COs): _____

Reason for Change Order:

(1)	Additional Work	_____	(2)	Field Change	_____
(3)	Change in Bid Quantities	_____	(4)	Change in Schedule	_____

a. Time to complete the work is extended by _____ calendar days.

b. Extended completion date is _____ .

Reason & Description of Change:

Supporting Documents (List or attach, as necessary):

This Change Order Has Been Requested By: CONTRACTOR _____ CITY _____

This Change Order Has Been Reviewed by: _____ _____
(Resident Engineer/Clerk of Works) (Date)

and _____ _____ _____
(City/Consultant Engineer/Architect) (Stamp#) (Date)

ARTICLE 7

SUPPLEMENTARY CONDITIONS - COMMONWEALTH OF MASSACHUSETTS

INDEX

All Mass. General Laws listed below are deemed inserted by reference in this contract. It is understood that the latest amendments to these laws shall also be inserted by reference.

1. METHOD OF PAYING SUBCONTRACTORS
   MGL C. 30; s. 39F

2. METHOD OF PAYING GENERAL CONTRACTORS - COMPLETION OF PUBLIC WORKS: SEMI-FINAL AND FINAL ESTIMATES: PAYMENTS: EXTRA WORK: DISPUTED ITEMS
   MGL C. 30, s. 39G

3. CLAIMS FOR UNFORESEEN CONDITIONS
   MGL C.30, s. 39N

4. CLAIMS FOR DELAY
   MGL C.30, s. 39O

5. DECISIONS AND APPROVALS BY ENGINEER OR ARCHITECT
   MGL C 30, s. 39P

6. PREFERENCE IN EMPLOYMENT, WAGES
   MGL C.149, s.26

7. HOURS OF WORK
   MGL C.149, s.34

8. WORK BY FOREIGN CORPORATIONS
   MGL C.30, s. 39L

9. MINIMUM WAGE RATES
   MGL C. 149, s. 26-27D

10. RECORD KEEPING
    MGL C. 30, S. 39R

ARTICLE 8

THE COMMONWEALTH OF MASSACHUSETTS
&
CITY OF QUINCY

SUPPLEMENTAL EQUAL EMPLOYMENT OPPORTUNITY ANTI-DISCRIMINATION AND AFFIRMATIVE ACTION PROGRAM

I. For purposes of this contract, "minority" refers to Asian-Americans, Blacks, Spanish Surnamed Americans, North American Indians, and Cape Verdeans. "Commission" refers to the Massachusetts Commission Against Discrimination.

II. During the performance of this contract, the contractor and all of his subcontractors (hereinafter collectively referred to as the Contractor), for himself, his assignees and successors in interest, agree as follows:

1. In connection with the performance of work under this contract, the Contractor shall not discriminate against any employee or applicant for employment because of race, color, religious creed, national origin, age or sex. The aforesaid provision shall include, but not be limited to the following: employment upgrading, demotion or transfer, recruitment advertising, recruitment layoff, termination, rates of pay or other forms of compensation, conditions or privileges of employment, and selection for apprenticeship. The Contractor shall post hereafter in conspicuous places, available for employees and applicants for employment, notices to be provided by the Commission setting forth the provisions of the Fair Employment Practices Law of the Commonwealth (M.G.L. Chapter 151B).

2. In connection with the performance of work under this Contract, the Contractor shall undertake in good faith affirmative action measures designed to eliminate any discriminatory barriers in the terms and conditions of employment on the grounds of race, color, religious creed, national origin, age or sex, and to eliminate and remedy any effects of such discrimination in the past. Such affirmative action shall entail positive and aggressive measures to ensure equal opportunity in the areas of hiring, upgrading, demotion or transfer, recruitment, layoff or termination, rate of compensation, and in-service or apprenticeship training programs. This affirmative action shall include all action required to guarantee equal employment opportunity for all persons, regardless of race, color, religious creed, national origin, age or sex. A purpose of this provision is to ensure to the fullest extent possible an adequate supply of skilled tradesmen for this and future Commonwealth public construction projects.

III. 1. As part of his obligation of remedial action under the foregoing section, the Contractor shall maintain on this project a not less than 10% ratio of minority employee man hours to total man hours in each job category including but not limited to bricklayers, carpenters, cement masons, electricians, ironworkers, operating engineers, and those "classes of work" enumerated in Section 44C of Chapter 149 of the Massachusetts General Laws.

2. In the hiring of minority journeymen, apprentices, trainees and advanced trainees, the Contractor shall rely on referrals from a multi-employer affirmative action program approved by the Commission, traditional referral methods utilized by the construction industry, and referrals from agencies, not more than three in number at any one time, designated by the Liaison Committee or the Commission.

IV. 1. At the discretion of the Commission there may be established for the life of this contract a body to be known ad the Liaison Committee. The Liaison Committee shall be composed of one representative each from the agency or agencies administrating this project, hereinafter called the administering agency, the Commission and such other representatives as may be designated by the Commission in conjunction with the administering agency.

2. The Contractor (or his agent, if any, designated by him as the on-site equal employment opportunity officer) shall recognize the Liaison Committee as an affirmative action body, and shall establish a continuing working relationship with the Liaison Committee, consulting with the Liaison Committee on all matters related to minority recruitment, referral, employment and training.

3. The Contractor shall prepare projected manning tables on a quarterly basis. These shall be broken down into projections, by week, or workers required in each trade. Copies shall be furnished one week in advance of the commencement of the period covered, and also when updated to the Commission and Liaison Committee.

4. Records of employment referral orders, prepared by the Contractor, shall be made available to the Commission and to the Liaison Committee on request.

5. The Contractor shall prepare weekly reports in a form approved by the Commission of hours worked in each trade by each employee, identified as minority or non-minority. Copies of these shall be provided at the end of each such week to the Commission and to the Liaison Committee.

V. If the Contractor shall use any subcontractor on any work performed under this contract, he shall take affirmative action to negotiate with qualified minority subcontractors. This affirmative action shall cover both pre-bid and post-bid periods. It shall include modification to the Office of Minority Business Assistance (within the Executive Office of Communities

and Development) or its designee, while bids are in preparation, of all products, work or services for which the Contractor intends to negotiate bids.

VI. In the employment of journeymen, apprentices, trainees and advanced trainees, the Contractor shall give preference, first, to citizens of the Commonwealth who have served in the armed forces of the United States in time of war and have been honorably discharged therefrom or released from active duty therein, and who are qualified to perform the work to which the employment related, and, secondly, to citizens of the Commonwealth generally, and, if such cannot be obtained in sufficient numbers, then to citizens of the United States.

VII. A designee of the commonwealth and a designee of the Liaison Committee shall each have right of access to the construction site.

VIII. Compliance with Requirements

The Contractor shall comply with the provision of Executive Order No. 74 as amended by Executive Order No.116 dated May 1, 1975, and of Chapter 151B, as amended, of the Massachusetts General Laws, both of which are herein incorporated by referenced and made a part of this contract.

IX. Non-Discrimination

The Contractor, in the performance of all work after award, and prior to completion of the contract work, will not discriminate on grounds of race, color, religious creed, national origin, age or sex in employment practices in the selection or retention of subcontractors, or in the procurement of materials and rentals of equipment.

X. Solicitations for Sub-Contracts,
and for the Procurement of Materials and Equipment

In all solicitations either by competitive bidding or negotiation made by the Contractor either for work to be performed under a subcontract or for the procurement of materials or equipment, each potential subcontractor or supplier shall be notified in writing by the Contractor of the Contractor's obligations under this Contract relative to non-discrimination and affirmative action.

XI. Bidders Certification Requirement

1. The bidders certification form currently in use will be deleted from all future bid documents.

2. The following certification statement will be inserted in the bid document just above the bidder's signature, as a substitute for the present bidder certification form.

"The bidder hereby certifies he shall comply with the minority manpower ratio and specific action steps contained in the appendix EEO attached hereto, including compliance with the minority contractor compliance specified in Section V of said appendix. The contractor receiving the award of the contract shall be required to obtain from each of its subcontractors and submit to the contacting or administering agency prior to the performance of any work under said contract a certification by said subcontractor, regardless of tier that it will comply with the minority manpower ratio and specific affirmative action steps contained in the appendix EEO.

XII. Contractor's Certification

The Contractors certification form must be signed by all successful low-bidder(s) prior to award by the contracting agency.

XIII. Compliance-Information, Reports and Sanctions

1. The Contractor will provide all information and reports required by the administering agency or the Commission on instructions issued by either of them and will permit access to its facilities and any books, records, accounts and other sources of information which may be determined by the Commission to affect the employment of personnel. This provision shall apply only to information pertinent to the Commonwealth's supplementary affirmative action contract requirements. Where information required is in the exclusive possession of another who fails or refuses to furnish this information, the Contractor shall so certify to the administering agency or the Commission as appropriate and shall set forth what efforts he has made to obtain the information.

2. Whenever the administering agency, the Commission, or the Liaison Committee believes the General Contractor or any Subcontractor may not be operating in compliance with the terms of this Section, the Commission directly, or through its designated agent, shall conduct an appropriate investigation, and may confer with the parties, to determine if such Contractor is operating in compliance with the terms of this Section. If the Commission or its agent finds the General Contractor or any subcontractor not in compliance, it shall make a preliminary report on non-compliance, and notify such Contractor in writing of such steps as will in the judgement of the Commission or its agent bring such Contractor into compliance. In the event that such Contractor fails or refuses to fully perform such steps, the Commission or its agent shall make a final report of non-compliance, and recommend to the administering agency the imposition of one or more of the sanctions listed below. If, however, the Commission believes the General Contractor or any Subcontractor has taken or is taking every possible measure to achieve compliance, it shall not make a final report of non-compliance. Within fourteen days

of the receipt of the recommendations of the Commission, the administering agency shall move to impose one or more of the following sanctions, as it may deem appropriate to attain full and effective enforcement:

a. The recovery by the administering agency from the General Contractor of 1/100 of 1% of the contract award price or $1,000, whichever sum is greater, in the nature of liquidated damages or, if a subcontractor is in non-compliance, the recovery by the administering agency from the General Contractor, to be assessed by the General Contractor as a back charge against the Subcontractor, of 1/10 of 1% of the subcontract price, or $400., whichever is greater, in the nature of liquidated damages, for each week that such party fails or refuses to comply;

b. The suspension of any payment or part thereof due under the contract until such time as the General Contractor or any Subcontractor is able to demonstrate his compliance with the terms of the contract;

c. The termination, or cancellation of the contract, in whole or in part, unless the General Contractor or any Subcontractor is able to demonstrate within a specified time his compliance with the terms of the contract;

d. The denial to the General Contractor or any Subcontractor of the right to participate in any future contracts awarded by the administering agency for a period of up to three years.

3. If at any time after the imposition of one or more of the above sanctions a Contractor is able to demonstrate that he is in compliance with this Section, he may request the administering agency, in consultation with the Commission, to suspend the sanctions conditionally, pending a final determination by the Commission as to whether the Contractor is in compliance. Upon final determination of the Commission, the administering agency, based on the recommendation of the Commission, shall either lift the sanctions or reimpose them.

4. Sanctions enumerated under Sections XII-2 shall not be imposed by the administering agency except after an adjudicatory proceeding, as that term is used M.G.L. c.30A, has been conducted. No investigation by the Commission or its agent shall be initiated without prior notice to the Contractor.

XIV. Severability

The provisions of this section are severable, and if any of these provisions shall be held unconstitutional by any court of competent jurisdiction, the decision of such court shall not affect or impair any of the remaining provisions.

301. CMR 50.00: AFFIRMATIVE ACTION

Section

50.01: Declaration of Policy
50.02: Purpose and Scope
50.03: Definitions
50.04: Employment Policies of Agencies Within EOEA
50.05: State Services and Facilities
50.06: Eligibility for Financial Assistance
(301 CMR 50.07 and 50.08: RESERVED)
50.09: Construction Projects Conducted by Agencies
50.10: Construction Projects Conducted by Grantees
(301 CMR 50.11 through 50.13: RESERVED)
50.14: Compliance and Sanctions
50.15: Severability
50.16: Appendix 1. Executive Order 74 (as amended and revised by Executive Order 116) the Governor's Code of Fair Practices.
50.17: Appendix 2. Supplemental Equal Employment Opportunity Anti-Discrimination and Affirmative Action Program
50.18: Appendix 3. Equal Employment Opportunity Guidelines
50.19: Appendix 4. Fair Housing Guidelines
50.20: Appendix 5. Memorandum of Agreement
50.21: Appendix 6. Goals and Timetables Adopted Pursuant to the Department of Labor's Regulations 41 CFR 60-4.6
50.22: Appendix 7. Rules of Procedure for Hearings on Compliance with the Commonwealth's Equal Employment Policy and Anti-Discrimination and Affirmative Action Plan

50.01: Declaration of Policy

(1) Non-discrimination and equal opportunity are the policy of the Executive Office of Environmental Affairs in all of its decisions, programs and activities. To that end, all agency employees shall rigorously take affirmative steps to ensure equality of opportunity in the internal affairs of all agencies as well as in their relations with the public, including those persons and organizations doing business with any agency of the Executive Office of Environmental Affairs. Each agency, in discharging its decisions, programs and activities shall have in meeting the goal of equality of opportunity.

(2) Affirmative action requires more than vigilance in the elimination of discriminatory barriers on the grounds of race, color, creed, national origin, age, and sex. It must also entail positive and aggressive measures to ensure equal opportunity in internal personnel practices and in those programs which can affect persons and political subdivisions outside of state government. This

affirmative action shall include efforts necessary to remedy the effects of present and past discriminatory patterns and practices and any action necessary to guarantee equal opportunity for all people.

(3) All agencies shall initiate affirmative action programs designed to conform to this policy. All such affirmative action programs shall be subject to review by the Executive Office of Administration and Finance, or such other Office or person as may be designated by the Governor, and the Massachusetts Commission Against Discrimination, as provided in 301 CMR 50.16 (Appendix 1, Executive Order 74, as amended by Executive Order No. 116, the Governor's Code of Fair Practice).

(4) All powers, functions and duties granted to the Secretary of Environmental Affairs under any provision of law shall be construed liberally for the accomplishment of these regulations.

These regulations establish the procedures by which the Executive Office of Environmental Affairs and all its agencies shall comply with the policy and requirements for equal employment opportunity and affirmative action.

50.10 Construction Projects Conducted by Grantees

(1) Before any applicant receives any financial assistance, including state assisted or federally assisted construction grants awarded under any program administered by an agency, the Secretary must have determined that such applicant is in compliance with the Equal Employment Opportunity Guidelines and Fair Housing Guidelines of the Commission, as they may be amended from time to time (301 CMR 50.18 Appendix 3 and 50.19 Appendix 4 of these regulations) according to the procedures set forth in 301 CMR 50.06 of these regulations.

(2) Every state or state-assisted or federal or federally-assisted contract for public buildings and public works or for goods or services that is let by a grantee shall contain an article prohibiting discriminatory employment practices by contractors, subcontractor, and suppliers of goods or services based on race, color, religion, national origin, ancestry, age or sex. The non-discrimination article shall include a provision requiring contractors and suppliers of goods or services to give written notice of their commitments under this section to any labor union, association or brotherhood with which they have a collective bargaining or other agreement. Such notice shall also be given to the Commission and to SOMBA.

(3) Grantees shall adopt for use in all contracts for construction projects with a dollar value in excess of ten thousand dollars ($10,000.) an adapted version of the Commonwealth of Massachusetts Supplemental Equal Employment Opportunity Anti-Discrimination and Affirmative Action Program (Supplemental Program) (301 CMR 50.17 Appendix 2 of these regulations). Such contract may include minority workforce percentages greater than those required for the geographical locations of the construction project as set forth in the Supplemental Program.

(4) Grantees shall take affirmative steps to increase participation of minority business enterprise (MBEs) in any construction grant.

(5) Prior to the publication of the availability of contracts for construction work to be performed under any construction grant with a total dollar value in excess of ten thousand dollars ($10,000.), the grantee shall notify SOMBA of its intent to solicit bids and shall make available to SOMBA, upon request, copies of the proposal to bid, specifications and plans, and bid invitations.

(6) At the discretion of the Commission there may be established for the life of any construction contract a body to be known as the Liaison Committee, which may be the Executive Office Liaison Committee as established by 301 CMR 50.09 (3) of these regulations. A representative of the grantee shall be a member of the Liaison Committee. The contractor or his agent shall recognize the Liaison Committee as an affirmative action body, and shall establish a continuing working relationship with the Liaison Committee, consulting with the Liaison Committee on all matters related to minority recruitment, referral, employment and training.

(7) Before making the final allocation of funds to any grantee, the Secretary shall review any contracts for construction work to be performed under the grantee, to ascertain the grantee's compliance with the provisions of these regulations.

MINIMUM PERCENTAGES TO BE APPLIED TO STATE AND STATE-ASSISTED CONTRACTS WITHIN THE COMMONWEALTH OF MASSACHUSETTS

The following percentages shall apply	Not Less Than:
Boston:	
Impact Area (Jamaica Plain (part), Mattapan, South Cove, Chinatown, Bay Village, Roxbury, Dorchester, South End.	30%
Others	10%
Cambridge:	12%
New Bedford:	18%
Springfield:	10%
All other cities and towns	10%

ARTICLE 12 BLASTING ORDINANCE IN COUNCIL

)ER NO. 236 of 1988

May 16, 1988

ERED.

Be it ordered that Chapter 24 of the Zoning Ordinance of the City of Quincy as amended, be further amended in Art. VIII, by adding a new section 87: Blasting.

Section 87

1. Pre-blast Survey

a. For all permits issued for blasting (rock excavation) in the City of Quincy, a pre-blast survey must be made by the contractor or by an approved firm in this kind of work and satisfactory to the contractor's insurance company.

b. The pre-blast survey will include a survey of the interior and exterior of existing buildings and stone walls adjacent to the project as specified herein, before any excavation or blasting is done. Written approval must be secured from the Fire Chief, City Engineer and Building Inspector serving as the Committee on Blasting.

c. The survey shall record all visible structural defects such as cracks, settlement and lines out of plumb.

d. The survey data shall be recorded in a permanent manner in approved hardbound notebooks. The survey data shall include polaroid photographs showing the building constructions surveyed referenced to the notebook pages. Also a tape recording of all data pertinent to the survey shall be made. The scope and format of the record survey data shall be satisfactory to the Committee on Blasting. Before commencing any blasting or ledge excavation, copies of the survey must be on file at the offices of the Quincy City Engineer, and Quincy City Clerk, City Hall, Quincy, MA.

e. The adjacent area requiring the pre-blasting survey is specified as all buildings and stone walls within a radius of three hundred fifty feet (350) from said blast.

f. Provided, however, that no pre-blasting survey shall be required if blasting is within the following limits: The total charge weight per blast does not exceed five (5) pounds and the maximum weight per delay does not exceed two pounds per delay.

YEAS Cahill, Cheney, Chretien, DeCristofaro, McGrath, Nutley, Phelan, Sheets, Toland

NAYS Cahill, Cheney, Chretien, DeCristofaro, McGrath, Nutley, Phelan, Sheets, Toland

ORDER NO. 236 of 1988

ORDERED

g. If blasting is designed to excavate more than a ten (10) cubic yard area, the contractor must post a bond with the City of Quincy. The amount of said bond shall be determined by the Committee on Blasting. The Committee on Blasting will not release the bond until it is convinced that all judgments and claims have been reasonably dealt with by the contractor.

h. All blasting is to be supervised on site by an authorized member of the Fire Department, assigned by the Chief, and the cost of said supervision shall be the sole responsibility of the contractor.

i. Any person who shall violate any of the provisions of this ordinance, as determined by the Committee on Blasting, or who fails to comply therewith, shall severally, for each and every violation and noncompliance respectively, be liable to a penalty of two hundred dollars ($200.00) for each offense.

PASSED TO BE ORDAINED OCTOBER 16, 1989

ATTEST

CLERK OF COUNCIL

APPROVED

OCT 23 1989

MAYOR

YEAS Cahill, Cheney, Chretien, DeCristofaro, McGrath, Nutley, Phelan, Sheets Toland

NAYS Cahill, Cheney, Chretien, DeCristofaro, McGrath, Nutley, Phelan, Sheets, Toland

Equitable adjustment in contract price for differing subsurface or latent physical conditions

If, during the progress of the work, the contractor or the awarding authority discovers that the actual subsurface or latent physical conditions encountered at the site differ substantially or materially from those shown on the plans or indicated in the contract documents either the contractor or the contracting authority may request an equitable adjustment in the contract price of the contract applying to work affected by the differing site conditions. A request for such an adjustment shall be in writing and shall be delivered by the party making such claim to the other party as soon as possible after such conditions are discovered. Upon receipt of such a claim from a contractor, or upon its own initiative, the contracting authority shall make an investigation of such physical conditions; and, if they differ substantially or materially from those shown on the plans or indicated in the contract documents or from those ordinarily encountered and generally recognized as inherent in work of the character provided for in the plans and contract documents and are of such a nature as to cause an increase or decrease in the cost of performance of the work or a change in the construction methods required for the performance of the work which results in an increase or decrease in the cost of the work, the contracting authority shall make an equitable adjustment in the contract price and the contract shall be modified in writing accordingly.

THE COMMONWEALTH OF MASSACHUSETTS
EXECUTIVE OFFICE OF LABOR AND WORKFORCE DEVELOPMENT
DEPARTMENT OF LABOR STANDARDS

Prevailing Wage Rates

As determined by the Director under the provisions of the Massachusetts General Laws, Chapter 149, Sections 26 to 27H

DEVAL L. PATRICK
Governor

TIMOTHY P. MURRAY
Lt. Governor

JOANNE F. GOLDSTEIN
Secretary

HEATHER E. ROWE
Director

Awarding Authority: City of Quincy

Contract Number:

City/Town: QUINCY

Description of Work: Construction of the hardscape & landscape improvements of approximately 8,000 sf of open space at Town Brook. Includes landscape planting, irrigation, sidewalk, stone wall and lighting

Job Location: HANCOCK ST./REVERE ROAD

Information about Prevailing Wage Schedules for Awarding Authorities and Contractors

- This wage schedule applies only to the specific project referenced at the top of this page and uniquely identified by the "Wage Request Number" on all pages of this schedule.
- Awarding authorities must request an updated wage schedule from the Department of Labor Standards ("DLS") if it has not opened bids or selected a contractor within 90 days of the date of issuance of the wage schedule.
- The wage schedule shall be incorporated in any advertisement or call for bids for the project as required by M.G.L. c. 149, § 27. Once a contractor has been selected by the awarding authority, the wage schedule shall be made a part of the contract for that project. The wage schedule must be posted in a conspicuous place at the work site during the life of the project in accordance with M.G.L. c. 149, § 27. The wages listed on the wage schedule must be paid to employees performing construction work on the project regardless of whether they are employed by the prime contractor, a filed sub-bidder, or any sub-contractor.
- All apprentices must be registered with the Massachusetts Division of Apprenticeship Training (DAT) in order to be paid at the lower apprentice rates. All apprentices must keep his/her apprentice identification card on his/her person during all work hours. If a worker is not registered with DAT, he/she must be paid the "total rate" listed on the wage schedule regardless of experience or skills.
- The wage rates will remain in effect for the duration of the project, except in the case of multi-year public construction projects. For construction projects lasting longer than one year, awarding authorities must request an updated wage schedule. Awarding authorities are required to request these updates no later than two weeks before the anniversary of the date the contract was executed by the awarding authority and the general contractor. Contractors are required to obtain the wage schedules from awarding authorities, and to pay no less than these rates to covered workers. The annual update requirement is not applicable to 27F "rental of equipment" contracts.
- Every contractor or subcontractor which performs construction work on the project is required to submit weekly payroll reports directly to the awarding authority and keep them on file for three years. Each weekly payroll report must contain: the employee's name, address, occupational classification, hours worked, and wages paid. Do not submit weekly payroll reports to DLS. A sample of a payroll reporting form may be obtained at http://www.mass.gov/dols/pw.
- Contractors with questions about the wage rates or classifications included on the wage schedule have an affirmative obligation to inquire with DLS at (617) 626-6953.
- Employees not receiving the prevailing wage rate set forth on the wage schedule may report the violation to the Fair Labor Division of the office of the Attorney General at (617) 727-3465.
- Failure of a contractor or subcontractor to pay the prevailing wage rates listed on the wage schedule to all employees who perform construction work on the project is a violation of the law and subjects the contractor or subcontractor to civil and criminal penalties.

Issue Date: 04/22/2013 **Wage Request Number:** 20130422-054

Classification	Effective Date	Base Wage	Health	Pension	Supplemental Unemployment	Total Rate
Construction						
(2 AXLE) DRIVER - EQUIPMENT *TEAMSTERS JOINT COUNCIL NO. 10 ZONE A*	12/01/2012	$31.55	$8.91	$8.00	$0.00	$48.46
(3 AXLE) DRIVER - EQUIPMENT *TEAMSTERS JOINT COUNCIL NO. 10 ZONE A*	12/01/2012	$31.62	$8.91	$8.00	$0.00	$48.53
(4 & 5 AXLE) DRIVER - EQUIPMENT *TEAMSTERS JOINT COUNCIL NO. 10 ZONE A*	12/01/2012	$31.74	$8.91	$8.00	$0.00	$48.65
ADS/SUBMERSIBLE PILOT *PILE DRIVER LOCAL 56 (ZONE 1)*	08/01/2012	$82.32	$9.80	$17.67	$0.00	$109.79
	08/01/2013	$85.47	$9.80	$17.67	$0.00	$112.94
	08/01/2014	$88.62	$9.80	$17.67	$0.00	$116.09
	08/01/2015	$91.77	$9.80	$17.67	$0.00	$119.24
AIR TRACK OPERATOR *LABORERS - ZONE 1*	12/01/2012	$33.05	$7.10	$12.45	$0.00	$52.60
	06/01/2013	$33.80	$7.10	$12.45	$0.00	$53.35
	12/01/2013	$34.55	$7.10	$12.45	$0.00	$54.10
	06/01/2014	$35.30	$7.10	$12.45	$0.00	$54.85
	12/01/2014	$36.05	$7.10	$12.45	$0.00	$55.60
	06/01/2015	$36.80	$7.10	$12.45	$0.00	$56.35
	12/01/2015	$37.55	$7.10	$12.45	$0.00	$57.10
	06/01/2016	$38.30	$7.10	$12.45	$0.00	$57.85
	12/01/2016	$39.30	$7.10	$12.45	$0.00	$58.85
For apprentice rates see "Apprentice- LABORER"						
ASBESTOS REMOVER - PIPE / MECH. EQUIPT. *HEAT & FROST INSULATORS LOCAL 6 (BOSTON)*	12/01/2012	$29.08	$10.40	$5.95	$0.00	$45.43
	06/01/2013	$29.88	$10.40	$5.95	$0.00	$46.23
	12/01/2013	$30.68	$10.40	$5.95	$0.00	$47.03
	06/01/2014	$31.58	$10.40	$5.95	$0.00	$47.93
	12/01/2014	$32.48	$10.40	$5.95	$0.00	$48.83
	06/01/2015	$33.43	$10.40	$5.95	$0.00	$49.78
	12/01/2015	$34.38	$10.40	$5.95	$0.00	$50.73
ASPHALT RAKER *LABORERS - ZONE 1*	12/01/2012	$32.55	$7.10	$12.45	$0.00	$52.10
	06/01/2013	$33.30	$7.10	$12.45	$0.00	$52.85
	12/01/2013	$34.05	$7.10	$12.45	$0.00	$53.60
	06/01/2014	$34.80	$7.10	$12.45	$0.00	$54.35
	12/01/2014	$35.55	$7.10	$12.45	$0.00	$55.10
	06/01/2015	$36.30	$7.10	$12.45	$0.00	$55.85
	12/01/2015	$37.05	$7.10	$12.45	$0.00	$56.60
	06/01/2016	$37.80	$7.10	$12.45	$0.00	$57.35
	12/01/2016	$38.80	$7.10	$12.45	$0.00	$58.35
For apprentice rates see "Apprentice- LABORER"						
ASPHALT/CONCRETE/CRUSHER PLANT-ON SITE *OPERATING ENGINEERS LOCAL 4*	12/01/2012	$40.09	$10.00	$13.02	$0.00	$63.11
	06/01/2013	$40.87	$10.00	$13.02	$0.00	$63.89
	12/01/2013	$41.65	$10.00	$13.02	$0.00	$64.67
For apprentice rates see "Apprentice- OPERATING ENGINEERS"						

Classification	Effective Date	Base Wage	Health	Pension	Supplemental Unemployment	Total Rate
BACKHOE/FRONT-END LOADER *OPERATING ENGINEERS LOCAL 4*	12/01/2012	$40.09	$10.00	$13.02	$0.00	$63.11
	06/01/2013	$40.87	$10.00	$13.02	$0.00	$63.89
	12/01/2013	$41.65	$10.00	$13.02	$0.00	$64.67
For apprentice rates see "Apprentice- OPERATING ENGINEERS"						
BARCO-TYPE JUMPING TAMPER *LABORERS - ZONE 1*	12/01/2012	$32.55	$7.10	$12.45	$0.00	$52.10
	06/01/2013	$33.30	$7.10	$12.45	$0.00	$52.85
	12/01/2013	$34.05	$7.10	$12.45	$0.00	$53.60
	06/01/2014	$34.80	$7.10	$12.45	$0.00	$54.35
	12/01/2014	$35.55	$7.10	$12.45	$0.00	$55.10
	06/01/2015	$36.30	$7.10	$12.45	$0.00	$55.85
	12/01/2015	$37.05	$7.10	$12.45	$0.00	$56.60
	06/01/2016	$37.80	$7.10	$12.45	$0.00	$57.35
	12/01/2016	$38.80	$7.10	$12.45	$0.00	$58.35
For apprentice rates see "Apprentice- LABORER"						
BLOCK PAVER, RAMMER / CURB SETTER *LABORERS - ZONE 1*	12/01/2012	$33.05	$7.10	$12.45	$0.00	$52.60
	06/01/2013	$33.80	$7.10	$12.45	$0.00	$53.35
	12/01/2013	$34.55	$7.10	$12.45	$0.00	$54.10
	06/01/2014	$35.30	$7.10	$12.45	$0.00	$54.85
	12/01/2014	$36.05	$7.10	$12.45	$0.00	$55.60
	06/01/2015	$36.80	$7.10	$12.45	$0.00	$56.35
	12/01/2015	$37.55	$7.10	$12.45	$0.00	$57.10
	06/01/2016	$38.30	$7.10	$12.45	$0.00	$57.85
	12/01/2016	$39.30	$7.10	$12.45	$0.00	$58.85
For apprentice rates see "Apprentice- LABORER"						
BOILER MAKER *BOILERMAKERS LOCAL 29*	01/01/2010	$37.70	$6.97	$11.18	$0.00	$55.85

Apprentice - *BOILERMAKER - Local 29*

Effective Date - 01/01/2010

Step	percent	Apprentice Base Wage	Health	Pension	Supplemental Unemployment	Total Rate
1	65	$24.51	$6.97	$11.18	$0.00	$42.66
2	65	$24.51	$6.97	$11.18	$0.00	$42.66
3	70	$26.39	$6.97	$11.18	$0.00	$44.54
4	75	$28.28	$6.97	$11.18	$0.00	$46.43
5	80	$30.16	$6.97	$11.18	$0.00	$48.31
6	85	$32.05	$6.97	$11.18	$0.00	$50.20
7	90	$33.93	$6.97	$11.18	$0.00	$52.08
8	95	$35.82	$6.97	$11.18	$0.00	$53.97

Notes:

Apprentice to Journeyworker Ratio:1:5

Classification	Effective Date	Base Wage	Health	Pension	Supplemental Unemployment	Total Rate
BRICK/STONE/ARTIFICIAL MASONRY (INCL. MASONRY WATERPROOFING) *BRICKLAYERS LOCAL 3 (QUINCY)*	02/01/2013	$47.41	$10.18	$17.83	$0.00	$75.42
	08/01/2013	$48.31	$10.18	$17.90	$0.00	$76.39
	02/01/2014	$48.87	$10.18	$17.90	$0.00	$76.95
	08/01/2014	$49.77	$10.18	$17.97	$0.00	$77.92
	02/01/2015	$50.33	$10.18	$17.97	$0.00	$78.48
	08/01/2015	$51.23	$10.18	$18.04	$0.00	$79.45
	02/01/2016	$51.80	$10.18	$18.04	$0.00	$80.02
	08/01/2016	$52.70	$10.18	$18.12	$0.00	$81.00
	02/01/2017	$53.27	$10.18	$18.12	$0.00	$81.57

Apprentice - *BRICK/PLASTER/CEMENT MASON - Local 3 Quincy*

Effective Date - 02/01/2013

Step	percent	Apprentice Base Wage	Health	Pension	Supplemental Unemployment	Total Rate
1	50	$23.71	$10.18	$17.83	$0.00	$51.72
2	60	$28.45	$10.18	$17.83	$0.00	$56.46
3	70	$33.19	$10.18	$17.83	$0.00	$61.20
4	80	$37.93	$10.18	$17.83	$0.00	$65.94
5	90	$42.67	$10.18	$17.83	$0.00	$70.68

Effective Date - 08/01/2013

Step	percent	Apprentice Base Wage	Health	Pension	Supplemental Unemployment	Total Rate
1	50	$24.16	$10.18	$17.90	$0.00	$52.24
2	60	$28.99	$10.18	$17.90	$0.00	$57.07
3	70	$33.82	$10.18	$17.90	$0.00	$61.90
4	80	$38.65	$10.18	$17.90	$0.00	$66.73
5	90	$43.48	$10.18	$17.90	$0.00	$71.56

Notes:

Apprentice to Journeyworker Ratio:1:5

BULLDOZER/GRADER/SCRAPER *OPERATING ENGINEERS LOCAL 4*	12/01/2012	$39.72	$10.00	$13.02	$0.00	$62.74
	06/01/2013	$40.49	$10.00	$13.02	$0.00	$63.51
	12/01/2013	$41.27	$10.00	$13.02	$0.00	$64.29

For apprentice rates see "Apprentice- OPERATING ENGINEERS"

CAISSON & UNDERPINNING BOTTOM MAN *LABORERS - FOUNDATION AND MARINE*	12/01/2012	$33.45	$7.10	$12.60	$0.00	$53.15
	06/01/2013	$34.20	$7.10	$12.60	$0.00	$53.90
	12/01/2013	$34.95	$7.10	$12.60	$0.00	$54.65
	06/01/2014	$35.70	$7.10	$12.60	$0.00	$55.40
	12/01/2014	$36.45	$7.10	$12.60	$0.00	$56.15
	06/01/2015	$37.20	$7.10	$12.60	$0.00	$56.90
	12/01/2015	$37.95	$7.10	$12.60	$0.00	$57.65
	06/01/2016	$38.70	$7.10	$12.60	$0.00	$58.40
	12/01/2016	$39.70	$7.10	$12.60	$0.00	$59.40

For apprentice rates see "Apprentice- LABORER"

Classification	Effective Date	Base Wage	Health	Pension	Supplemental Unemployment	Total Rate
CAISSON & UNDERPINNING LABORER *LABORERS - FOUNDATION AND MARINE*	12/01/2012	$32.30	$7.10	$12.60	$0.00	$52.00
	06/01/2013	$33.05	$7.10	$12.60	$0.00	$52.75
	12/01/2013	$33.80	$7.10	$12.60	$0.00	$53.50
	06/01/2014	$34.55	$7.10	$12.60	$0.00	$54.25
	12/01/2014	$35.30	$7.10	$12.60	$0.00	$55.00
	06/01/2015	$36.05	$7.10	$12.60	$0.00	$55.75
	12/01/2015	$36.80	$7.10	$12.60	$0.00	$56.50
	06/01/2016	$37.55	$7.10	$12.60	$0.00	$57.25
	12/01/2016	$38.55	$7.10	$12.60	$0.00	$58.25
For apprentice rates see "Apprentice- LABORER"						
CAISSON & UNDERPINNING TOP MAN *LABORERS - FOUNDATION AND MARINE*	12/01/2012	$32.30	$7.10	$12.60	$0.00	$52.00
	06/01/2013	$33.05	$7.10	$12.60	$0.00	$52.75
	12/01/2013	$33.80	$7.10	$12.60	$0.00	$53.50
	06/01/2014	$34.55	$7.10	$12.60	$0.00	$54.25
	12/01/2014	$35.30	$7.10	$12.60	$0.00	$55.00
	06/01/2015	$36.05	$7.10	$12.60	$0.00	$55.75
	12/01/2015	$36.80	$7.10	$12.60	$0.00	$56.50
	06/01/2016	$37.55	$7.10	$12.60	$0.00	$57.25
	12/01/2016	$38.55	$7.10	$12.60	$0.00	$58.25
For apprentice rates see "Apprentice- LABORER"						
CARBIDE CORE DRILL OPERATOR *LABORERS - ZONE 1*	12/01/2012	$32.55	$7.10	$12.45	$0.00	$52.10
	06/01/2013	$33.30	$7.10	$12.45	$0.00	$52.85
	12/01/2013	$34.05	$7.10	$12.45	$0.00	$53.60
	06/01/2014	$34.80	$7.10	$12.45	$0.00	$54.35
	12/01/2014	$35.55	$7.10	$12.45	$0.00	$55.10
	06/01/2015	$36.30	$7.10	$12.45	$0.00	$55.85
	12/01/2015	$37.05	$7.10	$12.45	$0.00	$56.60
	06/01/2016	$37.80	$7.10	$12.45	$0.00	$57.35
	12/01/2016	$38.80	$7.10	$12.45	$0.00	$58.35
For apprentice rates see "Apprentice- LABORER"						
CARPENTER *CARPENTERS -ZONE 2 (Eastern Massachusetts)*	03/01/2013	$33.92	$9.80	$15.61	$0.00	$59.33
	09/01/2013	$34.53	$9.80	$15.61	$0.00	$59.94
	03/01/2014	$35.13	$9.80	$15.61	$0.00	$60.54
	09/01/2014	$35.90	$9.80	$15.61	$0.00	$61.31
	03/01/2015	$36.67	$9.80	$15.61	$0.00	$62.08

Classification	Effective Date	Base Wage	Health	Pension	Supplemental Unemployment	Total Rate

Apprentice - *CARPENTER - Zone 2 Eastern MA*

Effective Date - 03/01/2013

Step	percent	Apprentice Base Wage	Health	Pension	Supplemental Unemployment	Total Rate
1	50	$16.96	$9.80	$1.57	$0.00	$28.33
2	60	$20.35	$9.80	$1.57	$0.00	$31.72
3	70	$23.74	$9.80	$10.90	$0.00	$44.44
4	75	$25.44	$9.80	$10.90	$0.00	$46.14
5	80	$27.14	$9.80	$12.47	$0.00	$49.41
6	80	$27.14	$9.80	$12.47	$0.00	$49.41
7	90	$30.53	$9.80	$14.04	$0.00	$54.37
8	90	$30.53	$9.80	$14.04	$0.00	$54.37

Effective Date - 09/01/2013

Step	percent	Apprentice Base Wage	Health	Pension	Supplemental Unemployment	Total Rate
1	50	$17.27	$9.80	$1.57	$0.00	$28.64
2	60	$20.72	$9.80	$1.57	$0.00	$32.09
3	70	$24.17	$9.80	$10.90	$0.00	$44.87
4	75	$25.90	$9.80	$10.90	$0.00	$46.60
5	80	$27.62	$9.80	$12.47	$0.00	$49.89
6	80	$27.62	$9.80	$12.47	$0.00	$49.89
7	90	$31.08	$9.80	$14.04	$0.00	$54.92
8	90	$31.08	$9.80	$14.04	$0.00	$54.92

Notes:

Apprentice to Journeyworker Ratio:1:5

CEMENT MASONRY/PLASTERING *BRICKLAYERS LOCAL 3 (QUINCY)*	02/01/2013	$42.55	$10.65	$18.61	$1.30	$73.11
	08/01/2013	$43.32	$10.65	$18.61	$1.30	$73.88
	02/01/2014	$43.75	$10.65	$18.61	$1.30	$74.31
	08/01/2014	$44.50	$10.65	$18.61	$1.30	$75.06
	02/01/2015	$44.93	$10.65	$18.61	$1.30	$75.49
	08/01/2015	$45.68	$10.65	$18.61	$1.30	$76.24
	02/01/2016	$46.13	$10.65	$18.61	$1.30	$76.69
	08/01/2016	$46.88	$10.65	$18.61	$1.30	$77.44
	02/01/2017	$47.33	$10.65	$18.61	$1.30	$77.89

Classification	Effective Date	Base Wage	Health	Pension	Supplemental Unemployment	Total Rate

Apprentice - *CEMENT MASONRY/PLASTERING - Eastern Mass (Quincy)*

Effective Date - 02/01/2013

Step	percent	Apprentice Base Wage	Health	Pension	Supplemental Unemployment	Total Rate
1	50	$21.28	$10.65	$12.11	$1.30	$45.34
2	60	$25.53	$10.65	$13.61	$1.30	$51.09
3	65	$27.66	$10.65	$14.61	$1.30	$54.22
4	70	$29.79	$10.65	$15.61	$1.30	$57.35
5	75	$31.91	$10.65	$16.61	$1.30	$60.47
6	80	$34.04	$10.65	$17.61	$1.30	$63.60
7	90	$38.30	$10.65	$18.61	$1.30	$68.86

Effective Date - 08/01/2013

Step	percent	Apprentice Base Wage	Health	Pension	Supplemental Unemployment	Total Rate
1	50	$21.66	$10.65	$12.11	$1.30	$45.72
2	60	$25.99	$10.65	$13.61	$1.30	$51.55
3	65	$28.16	$10.65	$14.61	$1.30	$54.72
4	70	$30.32	$10.65	$15.61	$1.30	$57.88
5	75	$32.49	$10.65	$16.61	$1.30	$61.05
6	80	$34.66	$10.65	$17.61	$1.30	$64.22
7	90	$38.99	$10.65	$18.61	$1.30	$69.55

Notes:

Steps are 6000 hours

Apprentice to Journeyworker Ratio:1:3

CHAIN SAW OPERATOR *LABORERS - ZONE 1*	12/01/2012	$32.55	$7.10	$12.45	$0.00	$52.10
	06/01/2013	$33.30	$7.10	$12.45	$0.00	$52.85
	12/01/2013	$34.05	$7.10	$12.45	$0.00	$53.60
	06/01/2014	$34.80	$7.10	$12.45	$0.00	$54.35
	12/01/2014	$35.55	$7.10	$12.45	$0.00	$55.10
	06/01/2015	$36.30	$7.10	$12.45	$0.00	$55.85
	12/01/2015	$37.05	$7.10	$12.45	$0.00	$56.60
	06/01/2016	$37.80	$7.10	$12.45	$0.00	$57.35
	12/01/2016	$38.80	$7.10	$12.45	$0.00	$58.35
For apprentice rates see "Apprentice- LABORER"						
CLAM SHELLS/SLURRY BUCKETS/HEADING MACHINES *OPERATING ENGINEERS LOCAL 4*	12/01/2012	$41.09	$10.00	$13.02	$0.00	$64.11
	06/01/2013	$41.87	$10.00	$13.02	$0.00	$64.89
	12/01/2013	$42.65	$10.00	$13.02	$0.00	$65.67
For apprentice rates see "Apprentice- OPERATING ENGINEERS"						
COMPRESSOR OPERATOR *OPERATING ENGINEERS LOCAL 4*	12/01/2012	$28.17	$10.00	$13.02	$0.00	$51.19
	06/01/2013	$28.72	$10.00	$13.02	$0.00	$51.74
	12/01/2013	$29.27	$10.00	$13.02	$0.00	$52.29
For apprentice rates see "Apprentice- OPERATING ENGINEERS"						
DELEADER (BRIDGE) *PAINTERS LOCAL 35 - ZONE 2*	01/01/2013	$45.01	$7.80	$15.60	$0.00	$68.41

Classification	Effective Date	Base Wage	Health	Pension	Supplemental Unemployment	Total Rate

Apprentice - *PAINTER Local 35 - BRIDGES/TANKS*

Effective Date - 01/01/2013

Step	percent	Apprentice Base Wage	Health	Pension	Supplemental Unemployment	Total Rate
1	50	$22.51	$7.80	$0.00	$0.00	$30.31
2	55	$24.76	$7.80	$3.52	$0.00	$36.08
3	60	$27.01	$7.80	$3.84	$0.00	$38.65
4	65	$29.26	$7.80	$4.16	$0.00	$41.22
5	70	$31.51	$7.80	$13.68	$0.00	$52.99
6	75	$33.76	$7.80	$14.00	$0.00	$55.56
7	80	$36.01	$7.80	$14.32	$0.00	$58.13
8	90	$40.51	$7.80	$14.96	$0.00	$63.27

Notes:

Steps are 750 hrs.

Apprentice to Journeyworker Ratio:1:1

DEMO: ADZEMAN *LABORERS - ZONE 1*	12/01/2011	$31.80	$7.10	$12.45	$0.00	$51.35
For apprentice rates see "Apprentice- LABORER"						
DEMO: BACKHOE/LOADER/HAMMER OPERATOR *LABORERS - ZONE 1*	12/01/2011	$32.80	$7.10	$12.45	$0.00	$52.35
For apprentice rates see "Apprentice- LABORER"						
DEMO: BURNERS *LABORERS - ZONE 1*	12/01/2011	$32.55	$7.10	$12.45	$0.00	$52.10
For apprentice rates see "Apprentice- LABORER"						
DEMO: CONCRETE CUTTER/SAWYER *LABORERS - ZONE 1*	12/01/2011	$32.80	$7.10	$12.45	$0.00	$52.35
For apprentice rates see "Apprentice- LABORER"						
DEMO: JACKHAMMER OPERATOR *LABORERS - ZONE 1*	12/01/2011	$32.55	$7.10	$12.45	$0.00	$52.10
For apprentice rates see "Apprentice- LABORER"						
DEMO: WRECKING LABORER *LABORERS - ZONE 1*	12/01/2011	$31.80	$7.10	$12.45	$0.00	$51.35
For apprentice rates see "Apprentice- LABORER"						
DIRECTIONAL DRILL MACHINE OPERATOR *OPERATING ENGINEERS LOCAL 4*	12/01/2012	$39.72	$10.00	$13.02	$0.00	$62.74
	06/01/2013	$40.49	$10.00	$13.02	$0.00	$63.51
	12/01/2013	$41.27	$10.00	$13.02	$0.00	$64.29
For apprentice rates see "Apprentice- OPERATING ENGINEERS"						
DIVER *PILE DRIVER LOCAL 56 (ZONE 1)*	08/01/2012	$54.88	$9.80	$17.67	$0.00	$82.35
	08/01/2013	$56.98	$9.80	$17.67	$0.00	$84.45
	08/01/2014	$59.08	$9.80	$17.67	$0.00	$86.55
	08/01/2015	$61.18	$9.80	$17.67	$0.00	$88.65
DIVER TENDER *PILE DRIVER LOCAL 56 (ZONE 1)*	08/01/2012	$54.88	$9.80	$17.67	$0.00	$82.35
	08/01/2013	$56.98	$9.80	$17.67	$0.00	$84.45
	08/01/2014	$59.08	$9.80	$17.67	$0.00	$86.55
	08/01/2015	$61.18	$9.80	$17.67	$0.00	$88.65

Classification	Effective Date	Base Wage	Health	Pension	Supplemental Unemployment	Total Rate
DIVER TENDER (EFFLUENT) *PILE DRIVER LOCAL 56 (ZONE 1)*	08/01/2012	$58.80	$9.80	$17.67	$0.00	$86.27
	08/01/2013	$61.05	$9.80	$17.67	$0.00	$88.52
	08/01/2014	$63.30	$9.80	$17.67	$0.00	$90.77
	08/01/2015	$65.55	$9.80	$17.67	$0.00	$93.02
DIVER/SLURRY (EFFLUENT) *PILE DRIVER LOCAL 56 (ZONE 1)*	08/01/2012	$82.32	$9.80	$17.67	$0.00	$109.79
	08/01/2013	$85.47	$9.80	$17.67	$0.00	$112.94
	08/01/2014	$88.62	$9.80	$17.67	$0.00	$116.09
	08/01/2015	$91.77	$9.80	$17.67	$0.00	$119.24
DRAWBRIDGE OPERATOR (Construction) *ELECTRICIANS LOCAL 103*	03/01/2013	$43.52	$13.00	$14.16	$0.00	$70.68
	09/01/2013	$44.20	$13.00	$14.18	$0.00	$71.38
	03/01/2014	$44.92	$13.00	$14.20	$0.00	$72.12
	09/01/2014	$45.60	$13.00	$14.22	$0.00	$72.82
	03/01/2015	$46.32	$13.00	$14.24	$0.00	$73.56
	09/01/2015	$47.27	$13.00	$14.27	$0.00	$74.54
	03/01/2016	$48.23	$13.00	$14.30	$0.00	$75.53
For apprentice rates see "Apprentice- ELECTRICIAN"						
ELECTRICIAN *ELECTRICIANS LOCAL 103*	03/01/2013	$43.52	$13.00	$14.16	$0.00	$70.68
	09/01/2013	$44.20	$13.00	$14.18	$0.00	$71.38
	03/01/2014	$44.92	$13.00	$14.20	$0.00	$72.12
	09/01/2014	$45.60	$13.00	$14.22	$0.00	$72.82
	03/01/2015	$46.32	$13.00	$14.24	$0.00	$73.56
	09/01/2015	$47.27	$13.00	$14.27	$0.00	$74.54
	03/01/2016	$48.23	$13.00	$14.30	$0.00	$75.53

Classification	Effective Date	Base Wage	Health	Pension	Supplemental Unemployment	Total Rate

Apprentice - *ELECTRICIAN - Local 103*

Effective Date - 03/01/2013

Step	percent	Apprentice Base Wage	Health	Pension	Supplemental Unemployment	Total Rate
1	40	$17.41	$13.00	$0.52	$0.00	$30.93
2	40	$17.41	$13.00	$0.52	$0.00	$30.93
3	45	$19.58	$13.00	$10.53	$0.00	$43.11
4	45	$19.58	$13.00	$10.53	$0.00	$43.11
5	50	$21.76	$13.00	$10.85	$0.00	$45.61
6	55	$23.94	$13.00	$11.19	$0.00	$48.13
7	60	$26.11	$13.00	$11.51	$0.00	$50.62
8	65	$28.29	$13.00	$11.85	$0.00	$53.14
9	70	$30.46	$13.00	$12.17	$0.00	$55.63
10	75	$32.64	$13.00	$12.51	$0.00	$58.15

Effective Date - 09/01/2013

Step	percent	Apprentice Base Wage	Health	Pension	Supplemental Unemployment	Total Rate
1	40	$17.68	$13.00	$0.53	$0.00	$31.21
2	40	$17.68	$13.00	$0.53	$0.00	$31.21
3	45	$19.89	$13.00	$10.54	$0.00	$43.43
4	45	$19.89	$13.00	$10.54	$0.00	$43.43
5	50	$22.10	$13.00	$10.86	$0.00	$45.96
6	55	$24.31	$13.00	$11.20	$0.00	$48.51
7	60	$26.52	$13.00	$11.53	$0.00	$51.05
8	65	$28.73	$13.00	$11.86	$0.00	$53.59
9	70	$30.94	$13.00	$12.19	$0.00	$56.13
10	75	$33.15	$13.00	$12.53	$0.00	$58.68

Notes: :

App Prior 1/1/03; 30/35/40/45/50/55/65/70/75/80

Apprentice to Journeyworker Ratio:2:3***

ELEVATOR CONSTRUCTOR *ELEVATOR CONSTRUCTORS LOCAL 4*	01/01/2012	$52.45	$8.78	$6.96	$0.00	$68.19

Classification	Effective Date	Base Wage	Health	Pension	Supplemental Unemployment	Total Rate

Apprentice - *ELEVATOR CONSTRUCTOR - Local 4*

Effective Date - 01/01/2012

Step	percent	Apprentice Base Wage	Health	Pension	Supplemental Unemployment	Total Rate
1	50	$26.23	$8.78	$0.00	$0.00	$35.01
2	55	$28.85	$8.78	$6.96	$0.00	$44.59
3	65	$34.09	$8.78	$6.96	$0.00	$49.83
4	70	$36.72	$8.78	$6.96	$0.00	$52.46
5	80	$41.96	$8.78	$6.96	$0.00	$57.70

Notes:

Steps 1-2 are 6 mos.; Steps 3-5 are 1 year

Apprentice to Journeyworker Ratio:1:1

ELEVATOR CONSTRUCTOR HELPER *ELEVATOR CONSTRUCTORS LOCAL 4*	01/01/2012	$38.59	$8.78	$6.96	$0.00	$54.33
FENCE & GUARD RAIL ERECTOR *LABORERS - ZONE 1*	12/01/2012	$32.55	$7.10	$12.45	$0.00	$52.10
	06/01/2013	$33.30	$7.10	$12.45	$0.00	$52.85
	12/01/2013	$34.05	$7.10	$12.45	$0.00	$53.60
	06/01/2014	$34.80	$7.10	$12.45	$0.00	$54.35
	12/01/2014	$35.55	$7.10	$12.45	$0.00	$55.10
	06/01/2015	$36.30	$7.10	$12.45	$0.00	$55.85
	12/01/2015	$37.05	$7.10	$12.45	$0.00	$56.60
	06/01/2016	$37.80	$7.10	$12.45	$0.00	$57.35
	12/01/2016	$38.80	$7.10	$12.45	$0.00	$58.35
For apprentice rates see "Apprentice- LABORER"						
FIELD ENG.INST.PERSON-BLDG,SITE,HVY/HWY *OPERATING ENGINEERS LOCAL 4*	11/01/2012	$38.26	$10.00	$12.65	$0.00	$60.91
	05/01/2013	$38.50	$10.00	$13.02	$0.00	$61.52
	11/01/2013	$39.26	$10.00	$13.02	$0.00	$62.28
	05/01/2014	$40.03	$10.00	$13.02	$0.00	$63.05
For apprentice rates see "Apprentice- OPERATING ENGINEERS"						
FIELD ENG.PARTY CHIEF-BLDG,SITE,HVY/HWY *OPERATING ENGINEERS LOCAL 4*	11/01/2012	$39.66	$10.00	$12.65	$0.00	$62.31
	05/01/2013	$39.91	$10.00	$13.02	$0.00	$62.93
	11/01/2013	$40.68	$10.00	$13.02	$0.00	$63.70
	05/01/2014	$41.45	$10.00	$13.02	$0.00	$64.47
For apprentice rates see "Apprentice- OPERATING ENGINEERS"						
FIELD ENG.ROD PERSON-BLDG,SITE,HVY/HWY *OPERATING ENGINEERS LOCAL 4*	11/01/2012	$21.18	$10.00	$12.65	$0.00	$43.83
	05/01/2013	$21.17	$10.00	$13.02	$0.00	$44.19
	11/01/2013	$21.63	$10.00	$13.02	$0.00	$44.65
	05/01/2014	$22.08	$10.00	$13.02	$0.00	$45.10
For apprentice rates see "Apprentice- OPERATING ENGINEERS"						

Classification	Effective Date	Base Wage	Health	Pension	Supplemental Unemployment	Total Rate
FIRE ALARM INSTALLER *ELECTRICIANS LOCAL 103*	03/01/2013	$43.52	$13.00	$14.16	$0.00	$70.68
	09/01/2013	$44.20	$13.00	$14.18	$0.00	$71.38
	03/01/2014	$44.92	$13.00	$14.20	$0.00	$72.12
	09/01/2014	$45.60	$13.00	$14.22	$0.00	$72.82
	03/01/2015	$46.32	$13.00	$14.24	$0.00	$73.56
	09/01/2015	$47.27	$13.00	$14.27	$0.00	$74.54
	03/01/2016	$48.23	$13.00	$14.30	$0.00	$75.53
For apprentice rates see "Apprentice- ELECTRICIAN"						
FIRE ALARM REPAIR / MAINTENANCE / COMMISSIONING *ELECTRICIANS LOCAL 103*	03/01/2013	$32.64	$13.00	$12.51	$0.00	$58.15
	09/01/2013	$33.15	$13.00	$12.52	$0.00	$58.67
	03/01/2014	$33.69	$13.00	$12.54	$0.00	$59.23
	09/01/2014	$34.20	$13.00	$12.56	$0.00	$59.76
	03/01/2015	$34.74	$13.00	$12.57	$0.00	$60.31
	09/01/2015	$35.45	$13.00	$12.59	$0.00	$61.04
	03/01/2016	$36.17	$13.00	$12.62	$0.00	$61.79
For apprentice rates see "Apprentice- TELECOMMUNICATIONS TECHNICIAN"						
FIREMAN (ASST. ENGINEER) *OPERATING ENGINEERS LOCAL 4*	12/01/2012	$33.61	$10.00	$13.02	$0.00	$56.63
	06/01/2013	$34.26	$10.00	$13.02	$0.00	$57.28
	12/01/2013	$34.92	$10.00	$13.02	$0.00	$57.94
For apprentice rates see "Apprentice- OPERATING ENGINEERS"						
FLAGGER & SIGNALER *LABORERS - ZONE 1*	12/01/2012	$20.50	$7.10	$12.45	$0.00	$40.05
	06/01/2013	$20.50	$7.10	$12.45	$0.00	$40.05
	12/01/2013	$20.50	$7.10	$12.45	$0.00	$40.05
	06/01/2014	$20.50	$7.10	$12.45	$0.00	$40.05
	12/01/2014	$20.50	$7.10	$12.45	$0.00	$40.05
	06/01/2015	$20.50	$7.10	$12.45	$0.00	$40.05
	12/01/2015	$20.50	$7.10	$12.45	$0.00	$40.05
	06/01/2016	$20.50	$7.10	$12.45	$0.00	$40.05
	12/01/2016	$20.50	$7.10	$12.45	$0.00	$40.05
For apprentice rates see "Apprentice- LABORER"						
FLOORCOVERER *FLOORCOVERERS LOCAL 2168 ZONE I*	03/01/2013	$38.61	$9.80	$16.71	$0.00	$65.12
	09/01/2013	$38.61	$9.80	$16.71	$0.00	$65.12
	03/01/2014	$38.61	$9.80	$16.71	$0.00	$65.12

Classification	Effective Date	Base Wage	Health	Pension	Supplemental Unemployment	Total Rate

Apprentice - *FLOORCOVERER - Local 2168 Zone I*

Effective Date - 03/01/2013

Step	percent	Apprentice Base Wage	Health	Pension	Supplemental Unemployment	Total Rate
1	50	$19.31	$9.80	$1.79	$0.00	$30.90
2	55	$21.24	$9.80	$1.79	$0.00	$32.83
3	60	$23.17	$9.80	$11.34	$0.00	$44.31
4	65	$25.10	$9.80	$11.34	$0.00	$46.24
5	70	$27.03	$9.80	$13.13	$0.00	$49.96
6	75	$28.96	$9.80	$13.13	$0.00	$51.89
7	80	$30.89	$9.80	$14.92	$0.00	$55.61
8	85	$32.82	$9.80	$14.92	$0.00	$57.54

Effective Date - 09/01/2013

Step	percent	Apprentice Base Wage	Health	Pension	Supplemental Unemployment	Total Rate
1	50	$19.31	$9.80	$1.79	$0.00	$30.90
2	55	$21.24	$9.80	$1.79	$0.00	$32.83
3	60	$23.17	$9.80	$11.34	$0.00	$44.31
4	65	$25.10	$9.80	$11.34	$0.00	$46.24
5	70	$27.03	$9.80	$13.13	$0.00	$49.96
6	75	$28.96	$9.80	$13.13	$0.00	$51.89
7	80	$30.89	$9.80	$14.92	$0.00	$55.61
8	85	$32.82	$9.80	$14.92	$0.00	$57.54

Notes:

Steps are 750 hrs.

Apprentice to Journeyworker Ratio:1:1

FORK LIFT/CHERRY PICKER *OPERATING ENGINEERS LOCAL 4*	12/01/2012	$40.09	$10.00	$13.02	$0.00	$63.11
	06/01/2013	$40.87	$10.00	$13.02	$0.00	$63.89
	12/01/2013	$41.65	$10.00	$13.02	$0.00	$64.67
For apprentice rates see "Apprentice- OPERATING ENGINEERS"						
GENERATOR/LIGHTING PLANT/HEATERS *OPERATING ENGINEERS LOCAL 4*	12/01/2012	$28.17	$10.00	$13.02	$0.00	$51.19
	06/01/2013	$28.72	$10.00	$13.02	$0.00	$51.74
	12/01/2013	$29.27	$10.00	$13.02	$0.00	$52.29
For apprentice rates see "Apprentice- OPERATING ENGINEERS"						
GLAZIER (GLASS PLANK/AIR BARRIER/INTERIOR SYSTEMS) *GLAZIERS LOCAL 35 (ZONE 2)*	01/01/2013	$35.51	$7.80	$14.60	$0.00	$57.91

Classification	Effective Date	Base Wage	Health	Pension	Supplemental Unemployment	Total Rate

Apprentice - *GLAZIER - Local 35 Zone 2*

Effective Date - 01/01/2013

Step	percent	Apprentice Base Wage	Health	Pension	Supplemental Unemployment	Total Rate
1	50	$17.76	$7.80	$0.00	$0.00	$25.56
2	55	$19.53	$7.80	$3.25	$0.00	$30.58
3	60	$21.31	$7.80	$3.54	$0.00	$32.65
4	65	$23.08	$7.80	$3.84	$0.00	$34.72
5	70	$24.86	$7.80	$12.83	$0.00	$45.49
6	75	$26.63	$7.80	$13.13	$0.00	$47.56
7	80	$28.41	$7.80	$13.42	$0.00	$49.63
8	90	$31.96	$7.80	$14.01	$0.00	$53.77

Notes:

Steps are 750 hrs.

Apprentice to Journeyworker Ratio:1:1

HOISTING ENGINEER/CRANES/GRADALLS *OPERATING ENGINEERS LOCAL 4*	12/01/2012	$40.09	$10.00	$13.02	$0.00	$63.11
	06/01/2013	$40.87	$10.00	$13.02	$0.00	$63.89
	12/01/2013	$41.65	$10.00	$13.02	$0.00	$64.67

Classification	Effective Date	Base Wage	Health	Pension	Supplemental Unemployment	Total Rate

Apprentice - *OPERATING ENGINEERS - Local 4*

Effective Date - 12/01/2012

Step	percent	Apprentice Base Wage	Health	Pension	Supplemental Unemployment	Total Rate
1	55	$22.05	$10.00	$0.00	$0.00	$32.05
2	60	$24.05	$10.00	$13.02	$0.00	$47.07
3	65	$26.06	$10.00	$13.02	$0.00	$49.08
4	70	$28.06	$10.00	$13.02	$0.00	$51.08
5	75	$30.07	$10.00	$13.02	$0.00	$53.09
6	80	$32.07	$10.00	$13.02	$0.00	$55.09
7	85	$34.08	$10.00	$13.02	$0.00	$57.10
8	90	$36.08	$10.00	$13.02	$0.00	$59.10

Effective Date - 06/01/2013

Step	percent	Apprentice Base Wage	Health	Pension	Supplemental Unemployment	Total Rate
1	55	$22.48	$10.00	$0.00	$0.00	$32.48
2	60	$24.52	$10.00	$13.02	$0.00	$47.54
3	65	$26.57	$10.00	$13.02	$0.00	$49.59
4	70	$28.61	$10.00	$13.02	$0.00	$51.63
5	75	$30.65	$10.00	$13.02	$0.00	$53.67
6	80	$32.70	$10.00	$13.02	$0.00	$55.72
7	85	$34.74	$10.00	$13.02	$0.00	$57.76
8	90	$36.78	$10.00	$13.02	$0.00	$59.80

Notes:

Apprentice to Journeyworker Ratio:1:6

HVAC (DUCTWORK) *SHEETMETAL WORKERS LOCAL 17 - A*	02/01/2013	$42.32	$9.82	$18.24	$2.11	$72.49
For apprentice rates see "Apprentice- SHEET METAL WORKER"						
HVAC (ELECTRICAL CONTROLS) *ELECTRICIANS LOCAL 103*	03/01/2013	$43.52	$13.00	$14.16	$0.00	$70.68
	09/01/2013	$44.20	$13.00	$14.18	$0.00	$71.38
	03/01/2014	$44.92	$13.00	$14.20	$0.00	$72.12
	09/01/2014	$45.60	$13.00	$14.22	$0.00	$72.82
	03/01/2015	$46.32	$13.00	$14.24	$0.00	$73.56
	09/01/2015	$47.27	$13.00	$14.27	$0.00	$74.54
	03/01/2016	$48.23	$13.00	$14.30	$0.00	$75.53
For apprentice rates see "Apprentice- ELECTRICIAN"						
HVAC (TESTING AND BALANCING - AIR) *SHEETMETAL WORKERS LOCAL 17 - A*	02/01/2013	$42.32	$9.82	$18.24	$2.11	$72.49
For apprentice rates see "Apprentice- SHEET METAL WORKER"						
HVAC (TESTING AND BALANCING -WATER) *PIPEFITTERS LOCAL 537*	03/01/2013	$49.34	$8.75	$14.39	$0.00	$72.48
For apprentice rates see "Apprentice- PIPEFITTER" or "PLUMBER/PIPEFITTER"						
HVAC MECHANIC *PIPEFITTERS LOCAL 537*	03/01/2013	$49.34	$8.75	$14.39	$0.00	$72.48

Classification	Effective Date	Base Wage	Health	Pension	Supplemental Unemployment	Total Rate
For apprentice rates see "Apprentice- PIPEFITTER" or "PLUMBER/PIPEFITTER"						
HYDRAULIC DRILLS *LABORERS - ZONE 1*	12/01/2012	$33.05	$7.10	$12.45	$0.00	$52.60
	06/01/2013	$33.80	$7.10	$12.45	$0.00	$53.35
	12/01/2013	$34.55	$7.10	$12.45	$0.00	$54.10
	06/01/2014	$35.30	$7.10	$12.45	$0.00	$54.85
	12/01/2014	$36.05	$7.10	$12.45	$0.00	$55.60
	06/01/2015	$36.80	$7.10	$12.45	$0.00	$56.35
	12/01/2015	$37.55	$7.10	$12.45	$0.00	$57.10
	06/01/2016	$38.30	$7.10	$12.45	$0.00	$57.85
	12/01/2016	$39.30	$7.10	$12.45	$0.00	$58.85
For apprentice rates see "Apprentice- LABORER"						
INSULATOR (PIPES & TANKS) *HEAT & FROST INSULATORS LOCAL 6 (BOSTON)*	09/01/2012	$41.46	$10.65	$11.50	$0.00	$63.61
	09/01/2013	$43.06	$10.65	$11.50	$0.00	$65.21
	09/01/2014	$45.06	$10.65	$11.50	$0.00	$67.21

Apprentice - *ASBESTOS INSULATOR (Pipes & Tanks) - Local 6 Boston*

Effective Date - 09/01/2012

Step	percent	Apprentice Base Wage	Health	Pension	Supplemental Unemployment	Total Rate
1	50	$20.73	$10.65	$8.60	$0.00	$39.98
2	60	$24.88	$10.65	$9.18	$0.00	$44.71
3	70	$29.02	$10.65	$9.76	$0.00	$49.43
4	80	$33.17	$10.65	$10.34	$0.00	$54.16

Effective Date - 09/01/2013

Step	percent	Apprentice Base Wage	Health	Pension	Supplemental Unemployment	Total Rate
1	50	$21.53	$10.65	$8.60	$0.00	$40.78
2	60	$25.84	$10.65	$9.18	$0.00	$45.67
3	70	$30.14	$10.65	$9.76	$0.00	$50.55
4	80	$34.45	$10.65	$10.34	$0.00	$55.44

Notes:
Steps are 1 year

Apprentice to Journeyworker Ratio:1:4

IRONWORKER/WELDER *IRONWORKERS LOCAL 7 (BOSTON AREA)*	03/16/2013	$40.23	$7.70	$18.35	$0.00	$66.28

Classification	Effective Date	Base Wage	Health	Pension	Supplemental Unemployment	Total Rate

Apprentice - *IRONWORKER - Local 7 Boston*

Effective Date - 03/16/2013

Step	percent	Apprentice Base Wage	Health	Pension	Supplemental Unemployment	Total Rate
1	60	$24.14	$7.70	$18.35	$0.00	$50.19
2	70	$28.16	$7.70	$18.35	$0.00	$54.21
3	75	$30.17	$7.70	$18.35	$0.00	$56.22
4	80	$32.18	$7.70	$18.35	$0.00	$58.23
5	85	$34.20	$7.70	$18.35	$0.00	$60.25
6	90	$36.21	$7.70	$18.35	$0.00	$62.26

Notes:

** Structural 1:6; Ornamental 1:4

Apprentice to Journeyworker Ratio:**

JACKHAMMER & PAVING BREAKER OPERATOR *LABORERS - ZONE 1*	12/01/2012	$32.55	$7.10	$12.45	$0.00	$52.10
	06/01/2013	$33.30	$7.10	$12.45	$0.00	$52.85
	12/01/2013	$34.05	$7.10	$12.45	$0.00	$53.60
	06/01/2014	$34.80	$7.10	$12.45	$0.00	$54.35
	12/01/2014	$35.55	$7.10	$12.45	$0.00	$55.10
	06/01/2015	$36.30	$7.10	$12.45	$0.00	$55.85
	12/01/2015	$37.05	$7.10	$12.45	$0.00	$56.60
	06/01/2016	$37.80	$7.10	$12.45	$0.00	$57.35
	12/01/2016	$38.80	$7.10	$12.45	$0.00	$58.35
For apprentice rates see "Apprentice- LABORER"						
LABORER *LABORERS - ZONE 1*	12/01/2012	$32.30	$7.10	$12.45	$0.00	$51.85
	06/01/2013	$33.05	$7.10	$12.45	$0.00	$52.60
	12/01/2013	$33.80	$7.10	$12.45	$0.00	$53.35
	06/01/2014	$34.55	$7.10	$12.45	$0.00	$54.10
	12/01/2014	$35.30	$7.10	$12.45	$0.00	$54.85
	06/01/2015	$36.05	$7.10	$12.45	$0.00	$55.60
	12/01/2015	$36.80	$7.10	$12.45	$0.00	$56.35
	06/01/2016	$37.55	$7.10	$12.45	$0.00	$57.10
	12/01/2016	$38.55	$7.10	$12.45	$0.00	$58.10

Classification	Effective Date	Base Wage	Health	Pension	Supplemental Unemployment	Total Rate

Apprentice - *LABORER - Zone 1*

Effective Date - 12/01/2012

Step	percent	Apprentice Base Wage	Health	Pension	Supplemental Unemployment	Total Rate
1	60	$19.38	$7.10	$12.45	$0.00	$38.93
2	70	$22.61	$7.10	$12.45	$0.00	$42.16
3	80	$25.84	$7.10	$12.45	$0.00	$45.39
4	90	$29.07	$7.10	$12.45	$0.00	$48.62

Effective Date - 06/01/2013

Step	percent	Apprentice Base Wage	Health	Pension	Supplemental Unemployment	Total Rate
1	60	$19.83	$7.10	$12.45	$0.00	$39.38
2	70	$23.14	$7.10	$12.45	$0.00	$42.69
3	80	$26.44	$7.10	$12.45	$0.00	$45.99
4	90	$29.75	$7.10	$12.45	$0.00	$49.30

Notes:

Apprentice to Journeyworker Ratio:1:5

LABORER: CARPENTER TENDER *LABORERS - ZONE 1*	12/01/2012	$32.30	$7.10	$12.45	$0.00	$51.85
	06/01/2013	$33.05	$7.10	$12.45	$0.00	$52.60
	12/01/2013	$33.80	$7.10	$12.45	$0.00	$53.35
	06/01/2014	$34.55	$7.10	$12.45	$0.00	$54.10
	12/01/2014	$35.30	$7.10	$12.45	$0.00	$54.85
	06/01/2015	$36.05	$7.10	$12.45	$0.00	$55.60
	12/01/2015	$36.80	$7.10	$12.45	$0.00	$56.35
	06/01/2016	$37.55	$7.10	$12.45	$0.00	$57.10
	12/01/2016	$38.55	$7.10	$12.45	$0.00	$58.10
For apprentice rates see "Apprentice- LABORER"						
LABORER: CEMENT FINISHER TENDER *LABORERS - ZONE 1*	12/01/2012	$32.30	$7.10	$12.45	$0.00	$51.85
	06/01/2013	$33.05	$7.10	$12.45	$0.00	$52.60
	12/01/2013	$33.80	$7.10	$12.45	$0.00	$53.35
	06/01/2014	$34.55	$7.10	$12.45	$0.00	$54.10
	12/01/2014	$35.30	$7.10	$12.45	$0.00	$54.85
	06/01/2015	$36.05	$7.10	$12.45	$0.00	$55.60
	12/01/2015	$36.80	$7.10	$12.45	$0.00	$56.35
	06/01/2016	$37.55	$7.10	$12.45	$0.00	$57.10
	12/01/2016	$38.55	$7.10	$12.45	$0.00	$58.10
For apprentice rates see "Apprentice- LABORER"						
LABORER: HAZARDOUS WASTE/ASBESTOS REMOVER *LABORERS - ZONE 1*	12/01/2011	$31.80	$7.10	$12.45	$0.00	$51.35
For apprentice rates see "Apprentice- LABORER"						

Classification	Effective Date	Base Wage	Health	Pension	Supplemental Unemployment	Total Rate
LABORER: MASON TENDER *LABORERS - ZONE 1*	12/01/2012	$32.55	$7.10	$12.45	$0.00	$52.10
	06/01/2013	$33.30	$7.10	$12.45	$0.00	$52.85
	12/01/2013	$34.05	$7.10	$12.45	$0.00	$53.60
	06/01/2014	$34.80	$7.10	$12.45	$0.00	$54.35
	12/01/2014	$35.55	$7.10	$12.45	$0.00	$55.10
	06/01/2015	$36.30	$7.10	$12.45	$0.00	$55.85
	12/01/2015	$37.05	$7.10	$12.45	$0.00	$56.60
	06/01/2016	$37.80	$7.10	$12.45	$0.00	$57.35
	12/01/2016	$38.80	$7.10	$12.45	$0.00	$58.35
For apprentice rates see "Apprentice- LABORER"						
LABORER: MULTI-TRADE TENDER *LABORERS - ZONE 1*	12/01/2012	$32.30	$7.10	$12.45	$0.00	$51.85
	06/01/2013	$33.05	$7.10	$12.45	$0.00	$52.60
	12/01/2013	$33.80	$7.10	$12.45	$0.00	$53.35
	06/01/2014	$34.55	$7.10	$12.45	$0.00	$54.10
	12/01/2014	$35.30	$7.10	$12.45	$0.00	$54.85
	06/01/2015	$36.05	$7.10	$12.45	$0.00	$55.60
	12/01/2015	$36.80	$7.10	$12.45	$0.00	$56.35
	06/01/2016	$37.55	$7.10	$12.45	$0.00	$57.10
	12/01/2016	$38.55	$7.10	$12.45	$0.00	$58.10
For apprentice rates see "Apprentice- LABORER"						
LABORER: TREE REMOVER *LABORERS - ZONE 1*	12/01/2012	$32.30	$7.10	$12.45	$0.00	$51.85
	06/01/2013	$33.05	$7.10	$12.45	$0.00	$52.60
	12/01/2013	$33.80	$7.10	$12.45	$0.00	$53.35
	06/01/2014	$34.55	$7.10	$12.45	$0.00	$54.10
	12/01/2014	$35.30	$7.10	$12.45	$0.00	$54.85
	06/01/2015	$36.05	$7.10	$12.45	$0.00	$55.60
	12/01/2015	$36.80	$7.10	$12.45	$0.00	$56.35
	06/01/2016	$37.55	$7.10	$12.45	$0.00	$57.10
	12/01/2016	$38.55	$7.10	$12.45	$0.00	$58.10
This classification applies to the wholesale removal of standing trees including all associated trimming of branches and limbs, and applies to the removal of branches at locations not on or around utility lines. For apprentice rates see "Apprentice- LABORER"						
LASER BEAM OPERATOR *LABORERS - ZONE 1*	12/01/2012	$32.55	$7.10	$12.45	$0.00	$52.10
	06/01/2013	$33.30	$7.10	$12.45	$0.00	$52.85
	12/01/2013	$34.05	$7.10	$12.45	$0.00	$53.60
	06/01/2014	$34.80	$7.10	$12.45	$0.00	$54.35
	12/01/2014	$35.55	$7.10	$12.45	$0.00	$55.10
	06/01/2015	$36.30	$7.10	$12.45	$0.00	$55.85
	12/01/2015	$37.05	$7.10	$12.45	$0.00	$56.60
	06/01/2016	$37.80	$7.10	$12.45	$0.00	$57.35
	12/01/2016	$38.80	$7.10	$12.45	$0.00	$58.35
For apprentice rates see "Apprentice- LABORER"						

Classification	Effective Date	Base Wage	Health	Pension	Supplemental Unemployment	Total Rate
MARBLE & TILE FINISHERS *BRICKLAYERS LOCAL 3 - MARBLE & TILE*	02/01/2013	$36.20	$10.18	$16.51	$0.00	$62.89
	08/01/2013	$36.91	$10.18	$16.58	$0.00	$63.67
	02/01/2014	$37.36	$10.18	$16.58	$0.00	$64.12
	08/01/2014	$38.07	$10.18	$16.65	$0.00	$64.90
	02/01/2015	$38.52	$10.18	$16.65	$0.00	$65.35
	08/01/2015	$39.23	$10.18	$16.72	$0.00	$66.13
	02/01/2016	$39.68	$10.18	$16.72	$0.00	$66.58
	08/01/2016	$40.38	$10.18	$16.80	$0.00	$67.36
	02/01/2017	$40.84	$10.18	$16.80	$0.00	$67.82

Apprentice - *MARBLE & TILE FINISHER - Local 3 Marble & Tile*

Effective Date - 02/01/2013

Step	percent	Apprentice Base Wage	Health	Pension	Supplemental Unemployment	Total Rate
1	50	$18.10	$10.18	$16.51	$0.00	$44.79
2	60	$21.72	$10.18	$16.51	$0.00	$48.41
3	70	$25.34	$10.18	$16.51	$0.00	$52.03
4	80	$28.96	$10.18	$16.51	$0.00	$55.65
5	90	$32.58	$10.18	$16.51	$0.00	$59.27

Effective Date - 08/01/2013

Step	percent	Apprentice Base Wage	Health	Pension	Supplemental Unemployment	Total Rate
1	50	$18.46	$10.18	$16.58	$0.00	$45.22
2	60	$22.15	$10.18	$16.58	$0.00	$48.91
3	70	$25.84	$10.18	$16.58	$0.00	$52.60
4	80	$29.53	$10.18	$16.58	$0.00	$56.29
5	90	$33.22	$10.18	$16.58	$0.00	$59.98

Notes:

Apprentice to Journeyworker Ratio:1:3

MARBLE MASONS,TILELAYERS & TERRAZZO MECH *BRICKLAYERS LOCAL 3 - MARBLE & TILE*	02/01/2013	$47.45	$10.18	$17.83	$0.00	$75.46
	08/01/2013	$48.35	$10.18	$17.90	$0.00	$76.43
	02/01/2014	$48.91	$10.18	$17.90	$0.00	$76.99
	08/01/2014	$49.81	$10.18	$17.97	$0.00	$77.96
	02/01/2015	$50.37	$10.18	$17.97	$0.00	$78.52
	08/01/2015	$51.27	$10.18	$18.04	$0.00	$79.49
	02/01/2016	$51.84	$10.18	$18.04	$0.00	$80.06
	08/01/2016	$52.74	$10.18	$18.12	$0.00	$81.04
	02/01/2017	$53.31	$10.18	$18.12	$0.00	$81.61

Classification	Effective Date	Base Wage	Health	Pension	Supplemental Unemployment	Total Rate

Apprentice - *MARBLE-TILE-TERRAZZO MECHANIC - Local 3 Marble & Tile*

Effective Date - 02/01/2013

Step	percent	Apprentice Base Wage	Health	Pension	Supplemental Unemployment	Total Rate
1	50	$23.73	$10.18	$17.83	$0.00	$51.74
2	60	$28.47	$10.18	$17.83	$0.00	$56.48
3	70	$33.22	$10.18	$17.83	$0.00	$61.23
4	80	$37.96	$10.18	$17.83	$0.00	$65.97
5	90	$42.71	$10.18	$17.83	$0.00	$70.72

Effective Date - 08/01/2013

Step	percent	Apprentice Base Wage	Health	Pension	Supplemental Unemployment	Total Rate
1	50	$24.18	$10.18	$17.90	$0.00	$52.26
2	60	$29.01	$10.18	$17.90	$0.00	$57.09
3	70	$33.85	$10.18	$17.90	$0.00	$61.93
4	80	$38.68	$10.18	$17.90	$0.00	$66.76
5	90	$43.52	$10.18	$17.90	$0.00	$71.60

Notes:

Apprentice to Journeyworker Ratio:1:5

MECH. SWEEPER OPERATOR (ON CONST. SITES) *OPERATING ENGINEERS LOCAL 4*	12/01/2012	$39.72	$10.00	$13.02	$0.00	$62.74
	06/01/2013	$40.49	$10.00	$13.02	$0.00	$63.51
	12/01/2013	$41.27	$10.00	$13.02	$0.00	$64.29
For apprentice rates see "Apprentice- OPERATING ENGINEERS"						
MECHANICS MAINTENANCE *OPERATING ENGINEERS LOCAL 4*	12/01/2012	$39.72	$10.00	$13.02	$0.00	$62.74
	06/01/2013	$40.49	$10.00	$13.02	$0.00	$63.51
	12/01/2013	$41.27	$10.00	$13.02	$0.00	$64.29
For apprentice rates see "Apprentice- OPERATING ENGINEERS"						
MILLWRIGHT (Zone 1) *MILLWRIGHTS LOCAL 1121 - Zone 1*	04/01/2011	$33.57	$8.67	$15.61	$0.00	$57.85

Classification	Effective Date	Base Wage	Health	Pension	Supplemental Unemployment	Total Rate

Apprentice - *MILLWRIGHT - Local 1121 Zone 1*

Effective Date - 04/01/2011

Step	percent	Apprentice Base Wage	Health	Pension	Supplemental Unemployment	Total Rate
1	50	$16.79	$8.67	$11.64	$0.00	$37.10
2	55	$18.46	$8.67	$11.64	$0.00	$38.77
3	60	$20.14	$8.67	$13.23	$0.00	$42.04
4	65	$21.82	$8.67	$13.23	$0.00	$43.72
5	70	$23.50	$8.67	$14.02	$0.00	$46.19
6	75	$25.18	$8.67	$14.02	$0.00	$47.87
7	80	$26.86	$8.67	$14.82	$0.00	$50.35
8	85	$28.53	$8.67	$14.82	$0.00	$52.02

Notes:

Apprentice to Journeyworker Ratio:1:5

MORTAR MIXER *LABORERS - ZONE 1*	12/01/2012	$32.55	$7.10	$12.45	$0.00	$52.10
	06/01/2013	$33.30	$7.10	$12.45	$0.00	$52.85
	12/01/2013	$34.05	$7.10	$12.45	$0.00	$53.60
	06/01/2014	$34.80	$7.10	$12.45	$0.00	$54.35
	12/01/2014	$35.55	$7.10	$12.45	$0.00	$55.10
	06/01/2015	$36.30	$7.10	$12.45	$0.00	$55.85
	12/01/2015	$37.05	$7.10	$12.45	$0.00	$56.60
	06/01/2016	$37.80	$7.10	$12.45	$0.00	$57.35
	12/01/2016	$38.80	$7.10	$12.45	$0.00	$58.35
For apprentice rates see "Apprentice- LABORER"						
OILER (OTHER THAN TRUCK CRANES,GRADALLS) *OPERATING ENGINEERS LOCAL 4*	12/01/2012	$21.28	$10.00	$13.02	$0.00	$44.30
	06/01/2013	$21.70	$10.00	$13.02	$0.00	$44.72
	12/01/2013	$22.12	$10.00	$13.02	$0.00	$45.14
For apprentice rates see "Apprentice- OPERATING ENGINEERS"						
OILER (TRUCK CRANES, GRADALLS) *OPERATING ENGINEERS LOCAL 4*	12/01/2012	$24.62	$10.00	$13.02	$0.00	$47.64
	06/01/2013	$25.10	$10.00	$13.02	$0.00	$48.12
	12/01/2013	$25.59	$10.00	$13.02	$0.00	$48.61
For apprentice rates see "Apprentice- OPERATING ENGINEERS"						
OTHER POWER DRIVEN EQUIPMENT - CLASS II *OPERATING ENGINEERS LOCAL 4*	12/01/2012	$39.72	$10.00	$13.02	$0.00	$62.74
	06/01/2013	$40.49	$10.00	$13.02	$0.00	$63.51
	12/01/2013	$41.27	$10.00	$13.02	$0.00	$64.29
For apprentice rates see "Apprentice- OPERATING ENGINEERS"						
PAINTER (BRIDGES/TANKS) *PAINTERS LOCAL 35 - ZONE 2*	01/01/2013	$45.01	$7.80	$15.60	$0.00	$68.41

Classification	Effective Date	Base Wage	Health	Pension	Supplemental Unemployment	Total Rate

Apprentice - *PAINTER Local 35 - BRIDGES/TANKS*

Effective Date - 01/01/2013

Step	percent	Apprentice Base Wage	Health	Pension	Supplemental Unemployment	Total Rate
1	50	$22.51	$7.80	$0.00	$0.00	$30.31
2	55	$24.76	$7.80	$3.52	$0.00	$36.08
3	60	$27.01	$7.80	$3.84	$0.00	$38.65
4	65	$29.26	$7.80	$4.16	$0.00	$41.22
5	70	$31.51	$7.80	$13.68	$0.00	$52.99
6	75	$33.76	$7.80	$14.00	$0.00	$55.56
7	80	$36.01	$7.80	$14.32	$0.00	$58.13
8	90	$40.51	$7.80	$14.96	$0.00	$63.27

Notes:

Steps are 750 hrs.

Apprentice to Journeyworker Ratio:1:1

PAINTER (SPRAY OR SANDBLAST, NEW) *	01/01/2013	$35.91	$7.80	$15.60	$0.00	$59.31

* If 30% or more of surfaces to be painted are new construction, NEW paint rate shall be used.*PAINTERS LOCAL 35 - ZONE 2*

Apprentice - *PAINTER Local 35 Zone 2 - Spray/Sandblast - New*

Effective Date - 01/01/2013

Step	percent	Apprentice Base Wage	Health	Pension	Supplemental Unemployment	Total Rate
1	50	$17.96	$7.80	$0.00	$0.00	$25.76
2	55	$19.75	$7.80	$3.52	$0.00	$31.07
3	60	$21.55	$7.80	$3.84	$0.00	$33.19
4	65	$23.34	$7.80	$4.16	$0.00	$35.30
5	70	$25.14	$7.80	$13.68	$0.00	$46.62
6	75	$26.93	$7.80	$14.00	$0.00	$48.73
7	80	$28.73	$7.80	$14.32	$0.00	$50.85
8	90	$32.32	$7.80	$14.96	$0.00	$55.08

Notes:

Apprentice to Journeyworker Ratio:1:1

PAINTER (SPRAY OR SANDBLAST, REPAINT)	01/01/2013	$33.97	$7.80	$15.60	$0.00	$57.37

PAINTERS LOCAL 35 - ZONE 2

Classification	Effective Date	Base Wage	Health	Pension	Supplemental Unemployment	Total Rate

Apprentice - *PAINTER Local 35 Zone 2 - Spray/Sandblast - Repaint*

Effective Date - 01/01/2013

Step	percent	Apprentice Base Wage	Health	Pension	Supplemental Unemployment	Total Rate
1	50	$16.99	$7.80	$0.00	$0.00	$24.79
2	55	$18.68	$7.80	$3.52	$0.00	$30.00
3	60	$20.38	$7.80	$3.84	$0.00	$32.02
4	65	$22.08	$7.80	$4.16	$0.00	$34.04
5	70	$23.78	$7.80	$13.68	$0.00	$45.26
6	75	$25.48	$7.80	$14.00	$0.00	$47.28
7	80	$27.18	$7.80	$14.32	$0.00	$49.30
8	90	$30.57	$7.80	$14.96	$0.00	$53.33

Notes:

Apprentice to Journeyworker Ratio:1:1

PAINTER (TRAFFIC MARKINGS) *LABORERS - ZONE 1*	12/01/2012	$32.30	$7.10	$12.45	$0.00	$51.85
	06/01/2013	$33.05	$7.10	$12.45	$0.00	$52.60
	12/01/2013	$33.80	$7.10	$12.45	$0.00	$53.35
	06/01/2014	$34.55	$7.10	$12.45	$0.00	$54.10
	12/01/2014	$35.30	$7.10	$12.45	$0.00	$54.85
	06/01/2015	$36.05	$7.10	$12.45	$0.00	$55.60
	12/01/2015	$36.80	$7.10	$12.45	$0.00	$56.35
	06/01/2016	$37.55	$7.10	$12.45	$0.00	$57.10
	12/01/2016	$38.55	$7.10	$12.45	$0.00	$58.10
For Apprentice rates see "Apprentice- LABORER"						
PAINTER / TAPER (BRUSH, NEW) * * If 30% or more of surfaces to be painted are new construction, NEW paint rate shall be used.*PAINTERS LOCAL 35 - ZONE 2*	01/01/2013	$34.51	$7.80	$15.60	$0.00	$57.91

Classification	Effective Date	Base Wage	Health	Pension	Supplemental Unemployment	Total Rate

Apprentice - *PAINTER - Local 35 Zone 2 - BRUSH NEW*

Effective Date - 01/01/2013

Step	percent	Apprentice Base Wage	Health	Pension	Supplemental Unemployment	Total Rate
1	50	$17.26	$7.80	$0.00	$0.00	$25.06
2	55	$18.98	$7.80	$3.52	$0.00	$30.30
3	60	$20.71	$7.80	$3.84	$0.00	$32.35
4	65	$22.43	$7.80	$4.16	$0.00	$34.39
5	70	$24.16	$7.80	$13.68	$0.00	$45.64
6	75	$25.88	$7.80	$14.00	$0.00	$47.68
7	80	$27.61	$7.80	$14.32	$0.00	$49.73
8	90	$31.06	$7.80	$14.96	$0.00	$53.82

Notes:
Steps are 750 hrs.

Apprentice to Journeyworker Ratio:1:1

PAINTER / TAPER (BRUSH, REPAINT) *PAINTERS LOCAL 35 - ZONE 2*	01/01/2013	$32.57	$7.80	$15.60	$0.00	$55.97

Apprentice - *PAINTER Local 35 Zone 2 - BRUSH REPAINT*

Effective Date - 01/01/2013

Step	percent	Apprentice Base Wage	Health	Pension	Supplemental Unemployment	Total Rate
1	50	$16.29	$7.80	$0.00	$0.00	$24.09
2	55	$17.91	$7.80	$3.52	$0.00	$29.23
3	60	$19.54	$7.80	$3.84	$0.00	$31.18
4	65	$21.17	$7.80	$4.16	$0.00	$33.13
5	70	$22.80	$7.80	$13.68	$0.00	$44.28
6	75	$24.43	$7.80	$14.00	$0.00	$46.23
7	80	$26.06	$7.80	$14.32	$0.00	$48.18
8	90	$29.31	$7.80	$14.96	$0.00	$52.07

Notes:
Steps are 750 hrs.

Apprentice to Journeyworker Ratio:1:1

PANEL & PICKUP TRUCKS DRIVER *TEAMSTERS JOINT COUNCIL NO. 10 ZONE A*	12/01/2012	$31.38	$8.91	$8.00	$0.00	$48.29
PIER AND DOCK CONSTRUCTOR (UNDERPINNING AND DECK) *PILE DRIVER LOCAL 56 (ZONE 1)*	08/01/2012	$39.20	$9.80	$17.67	$0.00	$66.67
	08/01/2013	$40.70	$9.80	$17.67	$0.00	$68.17
	08/01/2014	$42.20	$9.80	$17.67	$0.00	$69.67
	08/01/2015	$43.70	$9.80	$17.67	$0.00	$71.17

Classification	Effective Date	Base Wage	Health	Pension	Supplemental Unemployment	Total Rate
PILE DRIVER *PILE DRIVER LOCAL 56 (ZONE 1)*	08/01/2012	$39.20	$9.80	$17.67	$0.00	$66.67
	08/01/2013	$40.70	$9.80	$17.67	$0.00	$68.17
	08/01/2014	$42.20	$9.80	$17.67	$0.00	$69.67
	08/01/2015	$43.70	$9.80	$17.67	$0.00	$71.17

Apprentice - *PILE DRIVER - Local 56 Zone 1*

Effective Date - 08/01/2012

Step	percent	Apprentice Base Wage	Health	Pension	Supplemental Unemployment	Total Rate
1	50	$19.60	$9.80	$17.67	$0.00	$47.07
2	60	$23.52	$9.80	$17.67	$0.00	$50.99
3	70	$27.44	$9.80	$17.67	$0.00	$54.91
4	75	$29.40	$9.80	$17.67	$0.00	$56.87
5	80	$31.36	$9.80	$17.67	$0.00	$58.83
6	80	$31.36	$9.80	$17.67	$0.00	$58.83
7	90	$35.28	$9.80	$17.67	$0.00	$62.75
8	90	$35.28	$9.80	$17.67	$0.00	$62.75

Effective Date - 08/01/2013

Step	percent	Apprentice Base Wage	Health	Pension	Supplemental Unemployment	Total Rate
1	50	$20.35	$9.80	$17.67	$0.00	$47.82
2	60	$24.42	$9.80	$17.67	$0.00	$51.89
3	70	$28.49	$9.80	$17.67	$0.00	$55.96
4	75	$30.53	$9.80	$17.67	$0.00	$58.00
5	80	$32.56	$9.80	$17.67	$0.00	$60.03
6	80	$32.56	$9.80	$17.67	$0.00	$60.03
7	90	$36.63	$9.80	$17.67	$0.00	$64.10
8	90	$36.63	$9.80	$17.67	$0.00	$64.10

Notes:

Apprentice to Journeyworker Ratio:1:3

PIPEFITTER & STEAMFITTER *PIPEFITTERS LOCAL 537*	03/01/2013	$49.34	$8.75	$14.39	$0.00	$72.48

Classification	Effective Date	Base Wage	Health	Pension	Supplemental Unemployment	Total Rate

Apprentice - *PIPEFITTER - Local 537*

Effective Date - 03/01/2013

Step	percent	Apprentice Base Wage	Health	Pension	Supplemental Unemployment	Total Rate
1	40	$19.74	$8.75	$6.50	$0.00	$34.99
2	45	$22.20	$8.75	$14.39	$0.00	$45.34
3	60	$29.60	$8.75	$14.39	$0.00	$52.74
4	70	$34.54	$8.75	$14.39	$0.00	$57.68
5	80	$39.47	$8.75	$14.39	$0.00	$62.61

Notes:

** 1:3; 3:15; 1:10 thereafter / Steps are 1 yr.
Refrig/AC Mechanic **1:1;1:2;2:4;3:6;4:8;5:10;6:12;7:14;8:17;9:20;10:23(Max)

Apprentice to Journeyworker Ratio:**

PIPELAYER *LABORERS - ZONE 1*	12/01/2012	$32.55	$7.10	$12.45	$0.00	$52.10
	06/01/2013	$33.30	$7.10	$12.45	$0.00	$52.85
	12/01/2013	$34.05	$7.10	$12.45	$0.00	$53.60
	06/01/2014	$34.80	$7.10	$12.45	$0.00	$54.35
	12/01/2014	$35.55	$7.10	$12.45	$0.00	$55.10
	06/01/2015	$36.30	$7.10	$12.45	$0.00	$55.85
	12/01/2015	$37.05	$7.10	$12.45	$0.00	$56.60
	06/01/2016	$37.80	$7.10	$12.45	$0.00	$57.35
	12/01/2016	$38.80	$7.10	$12.45	$0.00	$58.35

For apprentice rates see "Apprentice- LABORER"

PLUMBERS & GASFITTERS *PLUMBERS & GASFITTERS LOCAL 12*	03/01/2013	$49.31	$9.32	$13.29	$0.00	$71.92

Apprentice - *PLUMBER/GASFITTER - Local 12*

Effective Date - 03/01/2013

Step	percent	Apprentice Base Wage	Health	Pension	Supplemental Unemployment	Total Rate
1	35	$17.26	$9.32	$4.97	$0.00	$31.55
2	40	$19.72	$9.32	$5.61	$0.00	$34.65
3	55	$27.12	$9.32	$7.53	$0.00	$43.97
4	65	$32.05	$9.32	$8.81	$0.00	$50.18
5	75	$36.98	$9.32	$10.09	$0.00	$56.39

Notes:

** 1:2; 2:6; 3:10; 4:14; 5:19/Steps are 1 yr
Step4 with lic$53.29 Step5 with lic$59.49

Apprentice to Journeyworker Ratio:**

PNEUMATIC CONTROLS (TEMP.) *PIPEFITTERS LOCAL 537*	03/01/2013	$49.34	$8.75	$14.39	$0.00	$72.48

For apprentice rates see "Apprentice- PIPEFITTER" or "PLUMBER/PIPEFITTER"

Classification	Effective Date	Base Wage	Health	Pension	Supplemental Unemployment	Total Rate
PNEUMATIC DRILL/TOOL OPERATOR *LABORERS - ZONE 1*	12/01/2012	$32.55	$7.10	$12.45	$0.00	$52.10
	06/01/2013	$33.30	$7.10	$12.45	$0.00	$52.85
	12/01/2013	$34.05	$7.10	$12.45	$0.00	$53.60
	06/01/2014	$34.80	$7.10	$12.45	$0.00	$54.35
	12/01/2014	$35.55	$7.10	$12.45	$0.00	$55.10
	06/01/2015	$36.30	$7.10	$12.45	$0.00	$55.85
	12/01/2015	$37.05	$7.10	$12.45	$0.00	$56.60
	06/01/2016	$37.80	$7.10	$12.45	$0.00	$57.35
	12/01/2016	$38.80	$7.10	$12.45	$0.00	$58.35
For apprentice rates see "Apprentice- LABORER"						
POWDERMAN & BLASTER *LABORERS - ZONE 1*	12/01/2012	$33.30	$7.10	$12.45	$0.00	$52.85
	06/01/2013	$34.05	$7.10	$12.45	$0.00	$53.60
	12/01/2013	$34.80	$7.10	$12.45	$0.00	$54.35
	06/01/2014	$35.55	$7.10	$12.45	$0.00	$55.10
	12/01/2014	$36.30	$7.10	$12.45	$0.00	$55.85
	06/01/2015	$37.05	$7.10	$12.45	$0.00	$56.60
	12/01/2015	$37.80	$7.10	$12.45	$0.00	$57.35
	06/01/2016	$38.55	$7.10	$12.45	$0.00	$58.10
	12/01/2016	$39.55	$7.10	$12.45	$0.00	$59.10
For apprentice rates see "Apprentice- LABORER"						
POWER SHOVEL/DERRICK/TRENCHING MACHINE *OPERATING ENGINEERS LOCAL 4*	12/01/2012	$40.09	$10.00	$13.02	$0.00	$63.11
	06/01/2013	$40.87	$10.00	$13.02	$0.00	$63.89
	12/01/2013	$41.65	$10.00	$13.02	$0.00	$64.67
For apprentice rates see "Apprentice- OPERATING ENGINEERS"						
PUMP OPERATOR (CONCRETE) *OPERATING ENGINEERS LOCAL 4*	12/01/2012	$40.09	$10.00	$13.02	$0.00	$63.11
	06/01/2013	$40.87	$10.00	$13.02	$0.00	$63.89
	12/01/2013	$41.65	$10.00	$13.02	$0.00	$64.67
For apprentice rates see "Apprentice- OPERATING ENGINEERS"						
PUMP OPERATOR (DEWATERING, OTHER) *OPERATING ENGINEERS LOCAL 4*	12/01/2012	$28.17	$10.00	$13.02	$0.00	$51.19
	06/01/2013	$28.72	$10.00	$13.02	$0.00	$51.74
	12/01/2013	$29.27	$10.00	$13.02	$0.00	$52.29
For apprentice rates see "Apprentice- OPERATING ENGINEERS"						
READY-MIX CONCRETE DRIVER *TEAMSTERS LOCAL 25b*	05/01/2011	$28.03	$7.75	$5.91	$0.00	$41.69
RECLAIMERS *OPERATING ENGINEERS LOCAL 4*	12/01/2012	$39.72	$10.00	$13.02	$0.00	$62.74
	06/01/2013	$40.49	$10.00	$13.02	$0.00	$63.51
	12/01/2013	$41.27	$10.00	$13.02	$0.00	$64.29
For apprentice rates see "Apprentice- OPERATING ENGINEERS"						
RESIDENTIAL WOOD FRAME (All Other Work) *CARPENTERS -ZONE 2 (Residential Wood)*	04/01/2011	$24.24	$8.67	$15.51	$0.00	$48.42
RESIDENTIAL WOOD FRAME CARPENTER ** ** The Residential Wood Frame Carpenter classification applies only to the construction of new, wood frame residences that do not exceed four stories including the basement.*CARPENTERS -ZONE 2 (Residential Wood)*	05/01/2011	$24.24	$6.34	$6.23	$0.00	$36.81

As of 9/1/09 Carpentry work on wood-frame residential WEATHERIZATION projects shall be paid the RESIDENTIAL WOOD FRAME CARPENTER rate.

Classification	Effective Date	Base Wage	Health	Pension	Supplemental Unemployment	Total Rate
RIDE-ON MOTORIZED BUGGY OPERATOR *LABORERS - ZONE 1*	12/01/2012	$32.55	$7.10	$12.45	$0.00	$52.10
	06/01/2013	$33.30	$7.10	$12.45	$0.00	$52.85
	12/01/2013	$34.05	$7.10	$12.45	$0.00	$53.60
	06/01/2014	$34.80	$7.10	$12.45	$0.00	$54.35
	12/01/2014	$35.55	$7.10	$12.45	$0.00	$55.10
	06/01/2015	$36.30	$7.10	$12.45	$0.00	$55.85
	12/01/2015	$37.05	$7.10	$12.45	$0.00	$56.60
	06/01/2016	$37.80	$7.10	$12.45	$0.00	$57.35
	12/01/2016	$38.80	$7.10	$12.45	$0.00	$58.35
For apprentice rates see "Apprentice- LABORER"						
ROLLER/SPREADER/MULCHING MACHINE *OPERATING ENGINEERS LOCAL 4*	12/01/2012	$39.72	$10.00	$13.02	$0.00	$62.74
	06/01/2013	$40.49	$10.00	$13.02	$0.00	$63.51
	12/01/2013	$41.27	$10.00	$13.02	$0.00	$64.29
For apprentice rates see "Apprentice- OPERATING ENGINEERS"						
ROOFER (Inc.Roofer Waterproofng &Roofer Damproofg) *ROOFERS LOCAL 33*	02/01/2013	$37.41	$10.50	$10.70	$0.00	$58.61

Apprentice - *ROOFER - Local 33*

Effective Date - 02/01/2013

Step	percent	Apprentice Base Wage	Health	Pension	Supplemental Unemployment	Total Rate
1	50	$18.71	$10.50	$3.38	$0.00	$32.59
2	60	$22.45	$10.50	$10.70	$0.00	$43.65
3	65	$24.32	$10.50	$10.70	$0.00	$45.52
4	75	$28.06	$10.50	$10.70	$0.00	$49.26
5	85	$31.80	$10.50	$10.70	$0.00	$53.00

Notes: ** 1:5, 2:6-10, the 1:10; Reroofing: 1:4, then 1:1
Step 1 is 2000 hrs.; Steps 2-5 are 1000 hrs.

Apprentice to Journeyworker Ratio:**

ROOFER SLATE / TILE / PRECAST CONCRETE *ROOFERS LOCAL 33*	02/01/2013	$37.66	$10.50	$10.70	$0.00	$58.86
For apprentice rates see "Apprentice- ROOFER"						
SHEETMETAL WORKER *SHEETMETAL WORKERS LOCAL 17 - A*	02/01/2013	$42.32	$9.82	$18.24	$2.11	$72.49

Classification	Effective Date	Base Wage	Health	Pension	Supplemental Unemployment	Total Rate

Apprentice - *SHEET METAL WORKER - Local 17-A*

Effective Date - 02/01/2013

Step	percent	Apprentice Base Wage	Health	Pension	Supplemental Unemployment	Total Rate
1	40	$16.93	$9.82	$4.00	$0.00	$30.75
2	40	$16.93	$9.82	$4.00	$0.00	$30.75
3	45	$19.04	$9.82	$8.00	$1.11	$37.97
4	45	$19.04	$9.82	$8.00	$1.11	$37.97
5	50	$21.16	$9.82	$8.75	$1.19	$40.92
6	50	$21.16	$9.82	$9.00	$1.20	$41.18
7	60	$25.39	$9.82	$10.24	$1.36	$46.81
8	65	$27.51	$9.82	$10.99	$1.45	$49.77
9	75	$31.74	$9.82	$12.49	$1.62	$55.67
10	85	$35.97	$9.82	$13.49	$1.78	$61.06

Notes:

Steps are 6 mos.

Apprentice to Journeyworker Ratio:1:4

SIGN ERECTOR *PAINTERS LOCAL 35 - ZONE 2*	06/01/2012	$25.37	$6.82	$6.85	$0.00	$39.04
	06/01/2013	$25.81	$7.07	$7.05	$0.00	$39.93

Classification	Effective Date	Base Wage	Health	Pension	Supplemental Unemployment	Total Rate

Apprentice - *SIGN ERECTOR - Local 35 Zone 2*

Effective Date - 06/01/2012

Step	percent	Apprentice Base Wage	Health	Pension	Supplemental Unemployment	Total Rate
1	50	$12.69	$6.82	$0.00	$0.00	$19.51
2	55	$13.95	$6.82	$2.35	$0.00	$23.12
3	60	$15.22	$6.82	$2.35	$0.00	$24.39
4	65	$16.49	$6.82	$2.35	$0.00	$25.66
5	70	$17.76	$6.82	$6.85	$0.00	$31.43
6	75	$19.03	$6.82	$6.85	$0.00	$32.70
7	80	$20.30	$6.82	$6.85	$0.00	$33.97
8	85	$21.56	$6.82	$6.85	$0.00	$35.23
9	90	$22.83	$6.82	$6.85	$0.00	$36.50

Effective Date - 06/01/2013

Step	percent	Apprentice Base Wage	Health	Pension	Supplemental Unemployment	Total Rate
1	50	$12.91	$7.07	$0.00	$0.00	$19.98
2	55	$14.20	$7.07	$2.45	$0.00	$23.72
3	60	$15.49	$7.07	$2.45	$0.00	$25.01
4	65	$16.78	$7.07	$2.45	$0.00	$26.30
5	70	$18.07	$7.07	$7.05	$0.00	$32.19
6	75	$19.36	$7.07	$7.05	$0.00	$33.48
7	80	$20.65	$7.07	$7.05	$0.00	$34.77
8	85	$21.94	$7.07	$7.05	$0.00	$36.06
9	90	$23.23	$7.07	$7.05	$0.00	$37.35

Notes:

Steps are 4 mos.

Apprentice to Journeyworker Ratio:1:1

SPECIALIZED EARTH MOVING EQUIP < 35 TONS *TEAMSTERS JOINT COUNCIL NO. 10 ZONE A*	12/01/2012	$31.84	$8.91	$8.00	$0.00	$48.75
SPECIALIZED EARTH MOVING EQUIP > 35 TONS *TEAMSTERS JOINT COUNCIL NO. 10 ZONE A*	12/01/2012	$32.13	$8.91	$8.00	$0.00	$49.04
SPRINKLER FITTER *SPRINKLER FITTERS LOCAL 550 - (Section A)*	03/01/2013	$52.58	$8.42	$12.60	$0.00	$73.60

Classification	Effective Date	Base Wage	Health	Pension	Supplemental Unemployment	Total Rate

Apprentice - *SPRINKLER FITTER - Local 550*

Effective Date - 03/01/2013

Step	percent	Apprentice Base Wage	Health	Pension	Supplemental Unemployment	Total Rate
1	35	$18.40	$8.42	$8.00	$0.00	$34.82
2	40	$21.03	$8.42	$8.00	$0.00	$37.45
3	45	$23.66	$8.42	$8.00	$0.00	$40.08
4	50	$26.29	$8.42	$8.00	$0.00	$42.71
5	55	$28.92	$8.42	$8.00	$0.00	$45.34
6	60	$31.55	$8.42	$8.00	$0.00	$47.97
7	65	$34.18	$8.42	$8.00	$0.00	$50.60
8	70	$36.81	$8.42	$8.00	$0.00	$53.23
9	75	$39.44	$8.42	$8.00	$0.00	$55.86
10	80	$42.06	$8.42	$8.00	$0.00	$58.48

Notes:

Steps are 850 hours

Apprentice to Journeyworker Ratio:1:1

STEAM BOILER OPERATOR *OPERATING ENGINEERS LOCAL 4*	12/01/2012	$39.72	$10.00	$13.02	$0.00	$62.74
	06/01/2013	$40.49	$10.00	$13.02	$0.00	$63.51
	12/01/2013	$41.27	$10.00	$13.02	$0.00	$64.29
For apprentice rates see "Apprentice- OPERATING ENGINEERS"						
TAMPERS, SELF-PROPELLED OR TRACTOR DRAWN *OPERATING ENGINEERS LOCAL 4*	12/01/2012	$39.72	$10.00	$13.02	$0.00	$62.74
	06/01/2013	$40.49	$10.00	$13.02	$0.00	$63.51
	12/01/2013	$41.27	$10.00	$13.02	$0.00	$64.29
For apprentice rates see "Apprentice- OPERATING ENGINEERS"						
TELECOMMUNICATION TECHNICIAN *ELECTRICIANS LOCAL 103*	03/01/2013	$32.64	$13.00	$12.51	$0.00	$58.15
	09/01/2013	$33.15	$13.00	$12.52	$0.00	$58.67
	03/01/2014	$33.69	$13.00	$12.54	$0.00	$59.23
	09/01/2014	$34.20	$13.00	$12.56	$0.00	$59.76
	03/01/2015	$34.74	$13.00	$12.57	$0.00	$60.31
	09/01/2015	$35.45	$13.00	$12.59	$0.00	$61.04
	03/01/2016	$36.17	$13.00	$12.62	$0.00	$61.79

Classification	Effective Date	Base Wage	Health	Pension	Supplemental Unemployment	Total Rate

Apprentice - *TELECOMMUNICATION TECHNICIAN - Local 103*

Effective Date - 03/01/2013

Step	percent	Apprentice Base Wage	Health	Pension	Supplemental Unemployment	Total Rate
1	40	$13.06	$13.00	$0.39	$0.00	$26.45
2	40	$13.06	$13.00	$0.39	$0.00	$26.45
3	45	$14.69	$13.00	$10.77	$0.00	$38.46
4	45	$14.69	$13.00	$10.77	$0.00	$38.46
5	50	$16.32	$13.00	$11.02	$0.00	$40.34
6	55	$17.95	$13.00	$11.27	$0.00	$42.22
7	60	$19.58	$13.00	$11.52	$0.00	$44.10
8	65	$21.22	$13.00	$11.77	$0.00	$45.99
9	70	$22.85	$13.00	$12.02	$0.00	$47.87
10	75	$24.48	$13.00	$12.26	$0.00	$49.74

Effective Date - 09/01/2013

Step	percent	Apprentice Base Wage	Health	Pension	Supplemental Unemployment	Total Rate
1	40	$13.26	$13.00	$0.40	$0.00	$26.66
2	40	$13.26	$13.00	$0.40	$0.00	$26.66
3	45	$14.92	$13.00	$9.79	$0.00	$37.71
4	45	$14.92	$13.00	$9.79	$0.00	$37.71
5	50	$16.58	$13.00	$10.04	$0.00	$39.62
6	55	$18.23	$13.00	$10.29	$0.00	$41.52
7	60	$19.89	$13.00	$10.54	$0.00	$43.43
8	65	$21.55	$13.00	$10.79	$0.00	$45.34
9	70	$23.21	$13.00	$11.04	$0.00	$47.25
10	75	$24.86	$13.00	$11.29	$0.00	$49.15

Notes:

Apprentice to Journeyworker Ratio:1:1

TERRAZZO FINISHERS *BRICKLAYERS LOCAL 3 - MARBLE & TILE*	02/01/2013	$46.35	$10.18	$17.83	$0.00	$74.36
	08/01/2013	$47.25	$10.18	$17.90	$0.00	$75.33
	02/01/2014	$47.81	$10.18	$17.90	$0.00	$75.89
	08/01/2014	$48.71	$10.18	$17.97	$0.00	$76.86
	02/01/2015	$49.27	$10.18	$17.97	$0.00	$77.42
	08/01/2015	$50.17	$10.18	$18.04	$0.00	$78.39
	02/01/2016	$50.74	$10.18	$18.04	$0.00	$78.96
	08/01/2016	$51.64	$10.18	$18.12	$0.00	$79.94
	02/01/2017	$52.21	$10.18	$18.12	$0.00	$80.51

Classification	Effective Date	Base Wage	Health	Pension	Supplemental Unemployment	Total Rate

Apprentice - *TERRAZZO FINISHER - Local 3 Marble & Tile*

Effective Date - 02/01/2013

Step	percent	Apprentice Base Wage	Health	Pension	Supplemental Unemployment	Total Rate
1	50	$23.18	$10.18	$17.83	$0.00	$51.19
2	60	$27.81	$10.18	$17.83	$0.00	$55.82
3	70	$32.45	$10.18	$17.83	$0.00	$60.46
4	80	$37.08	$10.18	$17.83	$0.00	$65.09
5	90	$41.72	$10.18	$17.83	$0.00	$69.73

Effective Date - 08/01/2013

Step	percent	Apprentice Base Wage	Health	Pension	Supplemental Unemployment	Total Rate
1	50	$23.63	$10.18	$17.90	$0.00	$51.71
2	60	$28.35	$10.18	$17.90	$0.00	$56.43
3	70	$33.08	$10.18	$17.90	$0.00	$61.16
4	80	$37.80	$10.18	$17.90	$0.00	$65.88
5	90	$42.53	$10.18	$17.90	$0.00	$70.61

Notes:

Apprentice to Journeyworker Ratio:1:3

TEST BORING DRILLER *LABORERS - FOUNDATION AND MARINE*	12/01/2012	$33.70	$7.10	$12.60	$0.00	$53.40
	06/01/2013	$34.45	$7.10	$12.60	$0.00	$54.15
	12/01/2013	$35.20	$7.10	$12.60	$0.00	$54.90
	06/01/2014	$35.95	$7.10	$12.60	$0.00	$55.65
	12/01/2014	$36.70	$7.10	$12.60	$0.00	$56.40
	06/01/2015	$37.45	$7.10	$12.60	$0.00	$57.15
	12/01/2015	$38.20	$7.10	$12.60	$0.00	$57.90
	06/01/2016	$38.95	$7.10	$12.60	$0.00	$58.65
	12/01/2016	$39.95	$7.10	$12.60	$0.00	$59.65

For apprentice rates see "Apprentice- LABORER"

TEST BORING DRILLER HELPER *LABORERS - FOUNDATION AND MARINE*	12/01/2012	$32.42	$7.10	$12.60	$0.00	$52.12
	06/01/2013	$33.17	$7.10	$12.60	$0.00	$52.87
	12/01/2013	$33.92	$7.10	$12.60	$0.00	$53.62
	06/01/2014	$34.67	$7.10	$12.60	$0.00	$54.37
	12/01/2014	$35.42	$7.10	$12.60	$0.00	$55.12
	06/01/2015	$36.17	$7.10	$12.60	$0.00	$55.87
	12/01/2015	$36.92	$7.10	$12.60	$0.00	$56.62
	06/01/2016	$37.67	$7.10	$12.60	$0.00	$57.37
	12/01/2016	$38.67	$7.10	$12.60	$0.00	$58.37

For apprentice rates see "Apprentice- LABORER"

Classification	Effective Date	Base Wage	Health	Pension	Supplemental Unemployment	Total Rate
TEST BORING LABORER *LABORERS - FOUNDATION AND MARINE*	12/01/2012	$32.30	$7.10	$12.60	$0.00	$52.00
	06/01/2013	$33.05	$7.10	$12.60	$0.00	$52.75
	12/01/2013	$33.80	$7.10	$12.60	$0.00	$53.50
	06/01/2014	$34.55	$7.10	$12.60	$0.00	$54.25
	12/01/2014	$35.30	$7.10	$12.60	$0.00	$55.00
	06/01/2015	$36.05	$7.10	$12.60	$0.00	$55.75
	12/01/2015	$36.80	$7.10	$12.60	$0.00	$56.50
	06/01/2016	$37.55	$7.10	$12.60	$0.00	$57.25
	12/01/2016	$38.55	$7.10	$12.60	$0.00	$58.25
For apprentice rates see "Apprentice- LABORER"						
TRACTORS/PORTABLE STEAM GENERATORS *OPERATING ENGINEERS LOCAL 4*	12/01/2012	$39.72	$10.00	$13.02	$0.00	$62.74
	06/01/2013	$40.49	$10.00	$13.02	$0.00	$63.51
	12/01/2013	$41.27	$10.00	$13.02	$0.00	$64.29
For apprentice rates see "Apprentice- OPERATING ENGINEERS"						
TRAILERS FOR EARTH MOVING EQUIPMENT *TEAMSTERS JOINT COUNCIL NO. 10 ZONE A*	12/01/2012	$32.42	$9.07	$8.00	$0.00	$49.49
TUNNEL WORK - COMPRESSED AIR *LABORERS (COMPRESSED AIR)*	12/01/2012	$44.58	$7.10	$13.00	$0.00	$64.68
	06/01/2013	$45.33	$7.10	$13.00	$0.00	$65.43
	12/01/2013	$46.08	$7.10	$13.00	$0.00	$66.18
	06/01/2014	$46.83	$7.10	$13.00	$0.00	$66.93
	12/01/2014	$47.58	$7.10	$13.00	$0.00	$67.68
	06/01/2015	$48.33	$7.10	$13.00	$0.00	$68.43
	12/01/2015	$49.08	$7.10	$13.00	$0.00	$69.18
	06/01/2016	$49.83	$7.10	$13.00	$0.00	$69.93
	12/01/2016	$50.83	$7.10	$13.00	$0.00	$70.93
For apprentice rates see "Apprentice- LABORER"						
TUNNEL WORK - COMPRESSED AIR (HAZ. WASTE) *LABORERS (COMPRESSED AIR)*	12/01/2012	$46.58	$7.10	$13.00	$0.00	$66.68
	06/01/2013	$47.33	$7.10	$13.00	$0.00	$67.43
	12/01/2013	$48.08	$7.10	$13.00	$0.00	$68.18
	06/01/2014	$48.83	$7.10	$13.00	$0.00	$68.93
	12/01/2014	$49.58	$7.10	$13.00	$0.00	$69.68
	06/01/2015	$50.33	$7.10	$13.00	$0.00	$70.43
	12/01/2015	$51.08	$7.10	$13.00	$0.00	$71.18
	06/01/2016	$51.83	$7.10	$13.00	$0.00	$71.93
	12/01/2016	$52.83	$7.10	$13.00	$0.00	$72.93
For apprentice rates see "Apprentice- LABORER"						
TUNNEL WORK - FREE AIR *LABORERS (FREE AIR TUNNEL)*	12/01/2012	$36.65	$7.10	$13.00	$0.00	$56.75
	06/01/2013	$37.40	$7.10	$13.00	$0.00	$57.50
	12/01/2013	$38.15	$7.10	$13.00	$0.00	$58.25
	06/01/2014	$38.90	$7.10	$13.00	$0.00	$59.00
	12/01/2014	$39.65	$7.10	$13.00	$0.00	$59.75
	06/01/2015	$40.40	$7.10	$13.00	$0.00	$60.50
	12/01/2015	$41.15	$7.10	$13.00	$0.00	$61.25
	06/01/2016	$41.90	$7.10	$13.00	$0.00	$62.00
	12/01/2016	$42.90	$7.10	$13.00	$0.00	$63.00
For apprentice rates see "Apprentice- LABORER"						

Classification	Effective Date	Base Wage	Health	Pension	Supplemental Unemployment	Total Rate
TUNNEL WORK - FREE AIR (HAZ. WASTE) *LABORERS (FREE AIR TUNNEL)*	12/01/2012	$38.65	$7.10	$13.00	$0.00	$58.75
	06/01/2013	$39.40	$7.10	$13.00	$0.00	$59.50
	12/01/2013	$40.15	$7.10	$13.00	$0.00	$60.25
	06/01/2014	$40.90	$7.10	$13.00	$0.00	$61.00
	12/01/2014	$41.65	$7.10	$13.00	$0.00	$61.75
	06/01/2015	$42.40	$7.10	$13.00	$0.00	$62.50
	12/01/2015	$43.15	$7.10	$13.00	$0.00	$63.25
	06/01/2016	$43.90	$7.10	$13.00	$0.00	$64.00
	12/01/2016	$44.90	$7.10	$13.00	$0.00	$65.00
For apprentice rates see "Apprentice- LABORER"						
VAC-HAUL *TEAMSTERS JOINT COUNCIL NO. 10 ZONE A*	12/01/2012	$31.84	$8.91	$8.00	$0.00	$48.75
WAGON DRILL OPERATOR *LABORERS - ZONE 1*	12/01/2012	$32.55	$7.10	$12.45	$0.00	$52.10
	06/01/2013	$33.30	$7.10	$12.45	$0.00	$52.85
	12/01/2013	$34.05	$7.10	$12.45	$0.00	$53.60
	06/01/2014	$34.80	$7.10	$12.45	$0.00	$54.35
	12/01/2014	$35.55	$7.10	$12.45	$0.00	$55.10
	06/01/2015	$36.30	$7.10	$12.45	$0.00	$55.85
	12/01/2015	$37.05	$7.10	$12.45	$0.00	$56.60
	06/01/2016	$37.80	$7.10	$12.45	$0.00	$57.35
	12/01/2016	$38.80	$7.10	$12.45	$0.00	$58.35
For apprentice rates see "Apprentice- LABORER"						
WASTE WATER PUMP OPERATOR *OPERATING ENGINEERS LOCAL 4*	12/01/2012	$40.09	$10.00	$13.02	$0.00	$63.11
	06/01/2013	$40.87	$10.00	$13.02	$0.00	$63.89
	12/01/2013	$41.65	$10.00	$13.02	$0.00	$64.67
For apprentice rates see "Apprentice- OPERATING ENGINEERS"						
WATER METER INSTALLER *PLUMBERS & GASFITTERS LOCAL 12*	03/01/2013	$49.31	$9.32	$13.29	$0.00	$71.92
For apprentice rates see "Apprentice- PLUMBER/PIPEFITTER" or "PLUMBER/GASFITTER"						
Outside Electrical - East						
CABLE TECHNICIAN (Power Zone) *OUTSIDE ELECTRICAL WORKERS - EAST LOCAL 104*	03/03/2013	$25.18	$8.20	$4.17	$0.00	$37.55
	09/01/2013	$25.66	$8.70	$4.48	$0.00	$38.84
For apprentice rates see "Apprentice- LINEMAN"						
CABLEMAN (Underground Ducts & Cables) *OUTSIDE ELECTRICAL WORKERS - EAST LOCAL 104*	03/03/2013	$35.67	$8.20	$4.98	$0.00	$48.85
	09/01/2013	$36.55	$8.70	$6.58	$0.00	$51.83
For apprentice rates see "Apprentice- LINEMAN"						
DRIVER / GROUNDMAN CDL *OUTSIDE ELECTRICAL WORKERS - EAST LOCAL 104*	03/03/2013	$29.38	$8.20	$5.68	$0.00	$43.26
	09/01/2013	$29.94	$8.70	$6.05	$0.00	$44.69
For apprentice rates see "Apprentice- LINEMAN"						
DRIVER / GROUNDMAN -Inexperienced (<2000 Hrs) *OUTSIDE ELECTRICAL WORKERS - EAST LOCAL 104*	03/03/2013	$23.08	$8.20	$3.94	$0.00	$35.22
	09/01/2013	$23.52	$8.70	$5.24	$0.00	$37.46
For apprentice rates see "Apprentice- LINEMAN"						
EQUIPMENT OPERATOR (Class A CDL) *OUTSIDE ELECTRICAL WORKERS - EAST LOCAL 104*	03/03/2013	$35.67	$8.20	$8.98	$0.00	$52.85
	09/01/2013	$36.35	$8.70	$9.43	$0.00	$54.48
For apprentice rates see "Apprentice- LINEMAN"						
EQUIPMENT OPERATOR (Class B CDL) *OUTSIDE ELECTRICAL WORKERS - EAST LOCAL 104*	03/03/2013	$31.48	$8.20	$6.19	$0.00	$45.87
	09/01/2013	$32.08	$8.70	$6.59	$0.00	$47.37
For apprentice rates see "Apprentice- LINEMAN"						

Classification	Effective Date	Base Wage	Health	Pension	Supplemental Unemployment	Total Rate
GROUNDMAN *OUTSIDE ELECTRICAL WORKERS - EAST LOCAL 104*	03/03/2013	$23.08	$8.20	$3.42	$0.00	$34.70
	09/01/2013	$23.52	$8.70	$3.72	$0.00	$35.94
For apprentice rates see "Apprentice- LINEMAN"						
GROUNDMAN -Inexperienced (<2000 Hrs.) *OUTSIDE ELECTRICAL WORKERS - EAST LOCAL 104*	03/03/2013	$18.89	$8.20	$2.61	$0.00	$29.70
	09/01/2013	$19.25	$8.70	$2.85	$0.00	$30.80
For apprentice rates see "Apprentice- LINEMAN"						
JOURNEYMAN LINEMAN *OUTSIDE ELECTRICAL WORKERS - EAST LOCAL 104*	03/03/2013	$41.97	$8.20	$11.26	$0.00	$61.43
	09/01/2013	$42.77	$8.70	$11.78	$0.00	$63.25

Apprentice - *LINEMAN (Outside Electrical) - East Local 104*

Effective Date - 03/03/2013

Step	percent	Apprentice Base Wage	Health	Pension	Supplemental Unemployment	Total Rate
1	60	$25.18	$8.20	$3.92	$0.00	$37.30
2	65	$27.28	$8.20	$4.36	$0.00	$39.84
3	70	$29.38	$8.20	$5.06	$0.00	$42.64
4	75	$31.48	$8.20	$5.76	$0.00	$45.44
5	80	$33.58	$8.20	$6.46	$0.00	$48.24
6	85	$35.67	$8.20	$7.17	$0.00	$51.04
7	90	$37.77	$8.20	$8.36	$0.00	$54.33

Effective Date - 09/01/2013

Step	percent	Apprentice Base Wage	Health	Pension	Supplemental Unemployment	Total Rate
1	60	$25.66	$8.70	$4.24	$0.00	$38.60
2	65	$27.80	$8.70	$4.71	$0.00	$41.21
3	70	$29.94	$8.70	$5.43	$0.00	$44.07
4	75	$32.08	$8.70	$6.16	$0.00	$46.94
5	80	$34.22	$8.70	$6.88	$0.00	$49.80
6	85	$36.35	$8.70	$7.62	$0.00	$52.67
7	90	$38.49	$8.70	$8.83	$0.00	$56.02

Notes:

Apprentice to Journeyworker Ratio:1:2

TELEDATA CABLE SPLICER *OUTSIDE ELECTRICAL WORKERS - EAST LOCAL 104*	07/16/2012	$26.33	$4.18	$2.79	$0.00	$33.30
TELEDATA LINEMAN/EQUIPMENT OPERATOR *OUTSIDE ELECTRICAL WORKERS - EAST LOCAL 104*	07/16/2012	$24.78	$4.18	$2.74	$0.00	$31.70
TELEDATA WIREMAN/INSTALLER/TECHNICIAN *OUTSIDE ELECTRICAL WORKERS - EAST LOCAL 104*	07/16/2012	$24.78	$4.18	$2.74	$0.00	$31.70
TREE TRIMMER *OUTSIDE ELECTRICAL WORKERS - EAST LOCAL 104*	02/01/2009	$16.59	$2.42	$0.00	$0.00	$19.01
This classification applies only to the trimming of branches on and around utility lines.						
TREE TRIMMER GROUNDMAN *OUTSIDE ELECTRICAL WORKERS - EAST LOCAL 104*	02/01/2009	$14.64	$2.42	$0.00	$0.00	$17.06
This classification applies only to the trimming of branches on and around utility lines.						

Classification	Effective Date	Base Wage	Health	Pension	Supplemental Unemployment	Total Rate

Additional Apprentice Information:

Minimum wage rates for apprentices employed on public works projects are listed above as a percentage of the pre-determined hourly wage rate established by the Commissioner under the provisions of the M.G.L. c. 149, ss. 26-27D. Apprentice ratios are established by the Division of Apprenticeship Training pursuant to M.G.L. c. 23, ss. 11E-11L.

All apprentices must be registered with the Division of Apprenticeship Training in accordance with M.G.L. c. 23, ss. 11E-11L.

All steps are six months (1000 hours) unless otherwise specified.

* Ratios are expressed in allowable number of apprentices to journeymen or fraction thereof.
** Multiple ratios are listed in the comment field.
*** APP to JM; 1:1, 2:2, 2:3, 3:4, 4:4, 4:5, 4:6, 5:7, 6:7, 6:8, 6:9, 7:10, 8:10, 8:11, 8:12, 9:13, 10:13, 10:14, etc.
**** APP to JM; 1:1, 1:2, 2:3, 2:4, 3:5, 4:6, 4:7, 5:8, 6:9, 6:10, 7:11, 8:12, 8:13, 9:14, 10:15, 10:16, etc.

Section 00890 - Permits

1.01 GENERAL REQUIREMENTS

A The Owner has obtained or will obtain and pay for the permits listed below, which are required for this project. The Contractor shall assist in obtaining certain permits, as indicated. The Contractor shall obtain, and pay for all other permits required, as defined under the Permits subsection of Section 00700 General Conditions.

B The Contractor shall familiarize itself with the Conditions associated with the Permits listed below, and shall strictly adhere to any conditions listed therein.

1. (**ISSUED**)
   Final Order of Conditions – Notice of Intent – Town Brook Enhancement Project (May 30, 2012) MassDEP file # 059-1261

2. (**ISSUED**)
   401 Water Quality Certification, BRP WW10, Major Project Certification – Town Brook Enhancement Project (August 31, 2012) MassDEP file # 059-1261

3. (**ISSUED**)
   USACE Section 404 Category 2 Permit, BRP WW10, Major Project Certification – Town Brook Enhancement Project (August 31, 2012) MassDEP file # 059-1261

C As required by the Final Order of Conditions and 401 Water Quality Certification for the Town Brook Enhancement Project, there shall be no construction that results in a discharge of waters to the Town Brook smelt run between March 1st and May 31st, unless otherwise allowed by DMF.

D The Contractor shall perform the work in accordance with the Contract Documents, including any permits/orders and any applicable municipal requirements.

E Permits from the City of Quincy Inspectional Services Department and Engineering Department must be obtained by the Contractor for the work.

END OF SECTION

INTENTIONALLY BLANK

SECTION 011000 SUMMARY OF WORK

1.01 DESCRIPTION

A The project consists of construction of the hardscape and landscape improvements and incidental site and/or utility improvements affected by the construction as further described in these Contract Documents and as shown on the Project Drawings, including, but not limited to landscape planting, irrigation, sidewalk, stone wall, lighting, informational signage and various site appurtenances and adjustments.

1.02 LOCATION OF WORK

A All work under this contract is located in the City of Quincy, Massachusetts. The work to be performed is on City of Quincy property, generally located along the southerly side of Walter J. Hannon Parkway from Hancock Street to Mechanic Street, including a City owned parcel east of Mechanic Street.

1.03 SCHEDULE AND OTHER SITE SPECIFIC REQUIREMENTS

A The Successful Bidder for the Town Brook Open Space Improvement Project will be required to coordinate directly with the Contractor for the Town Brook Enhancement Project currently under construction, to ensure that there is no impediment to construction for either party arising from concurrent construction activities. The Contractor shall be fully responsible for delays or additional cost due to insufficient or improper coordination between both parties, and no additional compensation will be allowed.

B The project construction milestone dates, maintenance of safe streets and sidewalks for vehicular/pedestrian traffic through the project area, safe and unobstructed access to businesses and abutters, public safety measures and site clean-up on a daily basis shall be strictly enforced. No waiver of any one of these requirements shall be allowed. The contractors are urged to study these requirements before submitting bids. Unfamiliarity with the above requirements shall not be accepted as an excuse for lack of performance and/or basis for claims.

C No site work shall be allowed between Thanksgiving Day and March 31 without written permission from the City. During all periods of no construction activity and prior to the project completion, the Contractor shall be fully responsible for maintaining roads/sidewalks, utilities and other public amenities for convenience, safety and safe access to businesses and abutters at all times.

D Work shall be performed in a manned to avoid impact to the surface traffic and site features as well as the traffic and pedestrian operation of Hancock Street at the intersection of Walter J. Hannon Parkway, and Revere Road at Mechanic Street. Work shall also be performed to minimize impact to existing site improvements along Walter J. Hannon Parkway.

E No work impacting the Existing Town Brook with potential impacts to smelt spawning areas shall occur during the active fish run season, March 1st through June 30th. Construction activities impacting Town Brook shall occur only during low-flow conditions outside the specified date range.

F In addition to being subject to the terms and conditions of the Contract Documents, and the schedule described therein, the work included as shown on the Plans and described in these Contract Documents shall be completed **no later than August 15th, 2013, or 60 Calendar Days from the Notice to Proceed** given by the City, whichever is sooner.

The City and the Contractor recognize that time is of the essence for this Agreement and that the City will suffer financial loss if the Work is not completed within the Contract Time specified in Article 3 of the Agreement, plus any extensions thereof allowed in accordance with Article 12 of the General Conditions. They also recognize the delays, expense and difficulties involved in providing, in a legal or arbitration proceeding, the actual loss suffered by the City if the Work is not completed on time. Accordingly, in accordance with Article 7 of the Agreement, instead of requiring any such proof, the City and the Contractor agree that as liquidated damages for delay (but not as a penalty) the Contractor shall pay the City one thousand two hundred dollars ($ 1,000.00) per day for each calendar day beyond the completion date that work included as shown on the Plans and described in these Contract Documents remains uncompleted.

Provided, that the Contractor shall not be charged with liquidated damages or any excess cost when the delay in completion of the Work is for reasons included in Article 12 of the General Conditions.

Provided further, that the Contractor shall furnish the City the required notification of such delays in accordance with the applicable Conditions of the Contract."

G The Contractor shall assume worst case weather conditions for purposes of determining a bid, and no additional compensation will be allowed for demobilization or mobilization associated with delays due to inclement weather.

H All of the necessary Permits and Owner authorizations must be obtained prior to performing the work described herein.

1.04 WORK TO BE DONE

A The work shall be done in accordance with these Contract Documents and Project Drawings, Construction Standards, the latest edition of American Standard for Nursery Stock, Massachusetts Highway Department Standard Specifications for Highways and Bridges (as applicable) and other approved standards of the Department, the Manual on Uniform Traffic Control Devices, Standard Drawings for Signs and Supports, all as last amended, other standards as referenced in these specifications.

B The work under this Contract consists of furnishing all necessary labor, materials, and equipment and services required for the construction of the Town Brook Open Space Improvements Project. The work includes, but is not limited to, the construction and installation of landscape planting, irrigation, hardscape, lighting, informational signage, drainage improvements and various site appurtenances and adjustments and incidental items necessary to complete the work shown on the plans and described in these Contract Documents and as shown on the Project Drawings. Care shall be taken to avoid impacts to the recently constructed Walter J. Hannon Parkway (Concourse) roadway and Town Brook Enhancement projects.

C The work identified in this Scope of Work and the associated drawings, listed on the Site Drawing Index, although separately bound, forms a part of the Contract Documents. The work performed under the Scope of Work shall be subject to the General Conditions, Supplemental Conditions of the Contract and Division 1 General Requirements of the above referenced project.

1.05 COORDINATION

A The Contractor shall coordinate all work with the City of Quincy Planning and Community Development Department, Quincy DPW, Quincy Police Department for traffic control and the local school crossing guards. All work shall also be coordinated with the City's resident engineer and contractor for the Town Brook Enhancement Project to minimize disturbance from concurrent work activity.

1.06 ABBREVIATIONS AND REFERENCES

A The following abbreviations and references may be used in these specifications.

1. Standard Specifications: Commonwealth of Massachusetts, Department of Transportation, Highway Division, Standard Specifications for Highways and Bridges.

2. Construction Standards: Commonwealth of Massachusetts Department of Public Works Construction Standards.

3. Signs & Supports: Commonwealth of Massachusetts Department of Public Works Standard Drawings for Signs and Supports.

4. MUTCD: Commonwealth of Massachusetts Manual on Uniform Traffic Control Devices.

5. AASHTO: The American Association of State Highway Transportation Officials.

6. ACI: American Concrete Institute.

7. ANSI: American National Standard Institute.

8. ASCE: American Society of Civil Engineers.

9. ASTM: American Society of Testing Methods.

10. AWS: American Welding Society.

11. Fed. Specs: Federal Specifications.

B Where reference is made to a specification by one of the above-referenced or other associations, it is understood that the latest revisions thereof shall apply.

C In case of conflict, these Specifications shall take precedence over the Standards and Specifications noted above.

END OF SECTION

SECTION 011700 SPECIAL PROVISIONS

1.01 GENERAL OBLIGATIONS OF THE CONTRACTOR

A The Contractor shall submit to the City, within ten (10) days after the execution of the Contract, written proof that the specified materials and equipment required for this project have been ordered and shall be delivered to the site on a specified date.

B No increase in unit bid prices will be allowed, should the Contractor be delayed in commencing project construction due to the unavailability of specified materials or equipment.

1.02 LIQUIDATED DAMAGES

A In case the Contractor fails to complete the work satisfactorily on or before the stipulated completion date, the Contractor agrees that the City will deduct from payments due the Contractor each month an amount equal to $1,000.00 for each calendar day in which the Work, as described herein, is not completed after the stipulated time. If payments due the Contractor, and in case such damages exceed the amount of all monies due or to become due the Contractor, the Contractor or its Surety shall pay the balance to the City.

1.03 CHANGE IN THE AMOUNT OF WORK

A The City reserves the right to delete all or a portion of the Work or to increase or decrease the scope of any item of work to be done under this contract either prior to executing the Contract or at any item during the life of the Contract. Exercise by the City of the above rights shall not constitute any grounds or basis for claims for damages or for loss of anticipated profits.

B Also, an increase or a decrease of quantity for any bid item, regardless of its magnitude, shall not be regarded as a grounds for an increase or decrease in the contract unit prices, nor on the time allowed for the completion of the Work except as provided for in the Contract.

C Where a change in design is required by improper construction or is requested by the Contract, the Contractor shall reimburse the City for the costs of such redesign or for the review of the Contractors proposed redesign.

1.04 SEQUENCE OF CONSTRUCTION

A All work on Saturdays, Sundays and legal holidays and beyond the agreed work hours shall require approval by the Engineer prior to the start of the Work. Work on Saturdays, Sundays and/or legal holidays may be authorized or required by the City or if it is needed to correct an emergency or a dangerous condition.

B The Contractor shall not be allowed uncontrolled use of public rights of way and amenities. All construction activities within the project area shall be confined to specific sections agreed beforehand

in meetings with the Engineer and/or other entities such as area business associations, community groups or other interested agencies. The Engineer has the right to reschedule the work in a different area as warranted in the best interests of the City, local residents and the general public.

C The winning bidder for the Town Brook Open Space Improvement Project will be required to coordinate directly with the Contractor for the Town Brook Enhancement Project, currently under construction, to ensure that there is no impediment to construction for either party arising from concurrent construction activities. The Contractor shall be fully responsible for delays or additional cost due to insufficient or improper coordination between both winning bidders, and no additional compensation will be allowed.

1.05 SITE INVESTIGATIONS

A The Contractor shall satisfy itself as to the conditions existing within the project area, the type of equipment required to perform the work, the character, quality and quantity of the surface and sub-surface materials to be encountered insofar as this information is reasonably ascertainable from an inspection of the site, as well as from information presented by the drawings, specifications, and other record information.

B The information presented in the specifications and on the drawings pertaining to the surface and sub-soil conditions, topography or other matters is given to assist the Contractor in properly evaluating the amount, complexity, and character of the work required hereunder. The City assumes no responsibility for the accuracy thereof. Such data is represented as being the best information available.

C It is understood and agreed that the Contractor, by careful examination, has satisfied itself as to the nature and location of the work, has examined the information (surface and sub-surface) as may be available, understands the character of equipment and facilities needed prior to and during the prosecution of the work, and the general and local conditions that affect the work under this Contract.

D The City assumes no responsibility for any conclusions or interpretations made by the Contractor on the basis of the information made available by the City. No extra compensation shall be authorized for extra work caused due to the Contractors unfamiliarity with the site and/or the drawings, specifications or the conditions peculiar to the site.

1.06 CONFORMANCE WITH PLANS, SPECIFICATIONS, LINES & GRADES

A The Contractor shall employ a competent engineer, registered within the state as a Professional Engineer or Land Surveyor. The Contractor shall be responsible for setting all control/base lines, grades, elevations, referenced marks, batter boards, etc. needed by the Contractor during construction. The Contractor shall set or reset, if necessary, at its own expense, such batter boards, additional grade stakes, pins, forms, materials, and labor as may be required.

B The Contractor shall furnish to the Engineer such assistance as may be needed for checking lines and grades and making other measurements in connection with the Work and/or payments for such work.

C The Contractor shall be responsible to make all field measurements and check all dimensions necessary for the proper fit and construction of the work called for in the drawings and specifications.

D For the purposes of observing work that affects their respective properties and/or interests, the City staff and other public agencies shall be permitted access to the work at all times, but all official orders and directives to the Contractor shall be issued by the Engineer.

1.07 PERMITS

A The Contractor shall obtain all necessary agency permits, not included herein, but required for the execution of certain phases of the project. The Contractor shall fill out all forms and furnish all drawings required to obtain such permits. A copy of the approved permit shall be submitted to the Engineer. All fees associated with these permits shall be considered included in the scope of work.

B The Contractor shall be responsible for following any issued Orders of Condition applicable to the project as listed in Section 008900 PERMITS.

1.08 PROJECT COMPLETION

A In order to minimize the disruption of normal activities in the area, all construction within the project limits must be completed in all respects by the completion date stipulated in the Contract. No time extension shall be allowed beyond the completion date specified herein or agreed to subsequently in the pre-construction or other contract meetings. The provisions of this paragraph also apply to all milestone dates for various activities and items of work within the overall project completion schedule.

B The Contractor must note that failure to complete the work within the period specified may result in a loss to the City, and in this case, the City shall enforce all applicable provisions in the Contract to recover such loss and safeguard its interests.

C Permitting the Contractor to continue with the work after the time stipulated for its completion has expired, or after the time to which such completion may have been extended has expired, or the making of any payment of the Contractor after such time, shall in no way operate as a waiver on part of the City of any of its rights under this Contract.

1.09 CONTRACTORS RECORDS

A The Contractor shall comply with Massachusetts General Law, Chapter 30, Section 39R, as explained below:

B The Contractor shall retain its project records for at least six (6) years after final payment. During this period, the City, the Office of the Inspector General, and the Office of the Attorney General, Division of Labor and Workforce Development shall have the right to inspect these records. The Contractor shall notify the awarding authority of any changes in its bookkeeping and related matters along with a letter from a Certified Public Accountants (CPA). Prior to the execution of the Contract, the Contractor shall file a statement of management and internal accounting controls, which shall be maintained on file together with an annual audited financial statement.

1.010 MANUFACTURER EXPERIENCE

A For all equipment supplied under this Contract, a manufacturer must have a minimum of five (5) years experience with the product. Equipment not meeting the specified experience/performance history can be considered only if the material supplier/manufacturer is willing to provide an express warranty covering all labor, parts and/or a complete assembly replacement for a period of five (5) years. This warranty shall cover repairs/replacement of defective parts or complete assemblies due to defective workmanship, failure, malfunction and/or substandard performance.

It is the Contractors responsibility to make the manufacturer and/or the vendor award of these regulations.

1.011 EQUIPMENT WARRANTIES

A The Contractor shall be responsible for obtaining the manufacturers warranty certifying that the equipment as supplied meets the specifications is of quality construction and is free from defects in material and workmanship.

B The equipment, apparatus and parts furnished shall be warranted for a period of 5 years, excepting only those items that are normally consumed in service, such as oil, grease, packing, gaskets, O-rings, etc. The equipment manufacturer shall be solely responsible for the warranty of all system components.

C Components failing to perform as specified, or as represented by the manufacturer, or are proven defective in service during the warranty period, shall be replaced or repaired by the manufacturer at no cost to the City.

D All equipment delivered to the job is subject to Engineers inspection. Any changes necessary because equipment delivered to this job is not in accordance with approved drawings, shall be removed from the site at the Contractors expense.

1.012 GUARANTEE FOR PLANT MATERIALS

A A. Plants shall be guaranteed for a period of one year after written notification of acceptance and shall be alive and in satisfactory growth at the end of the guarantee period.

B At the end of the guarantee period, a final inspection will be held to determine whether any additional plant material replacements are required. Each plant shall show at least 75% healthy growth and shall have the natural character of its species as determined by the Owner's Representative. Plants found unacceptable shall be removed promptly from the site and be replaced during the normal planting season, until the plants live through one year.

C Replacement plants shall have a one year guarantee from time of planting.

1.013 MANUFACTURER'S QUALIFICATIONS

A In addition to requirements for providing services of the Manufacturer's Representative, the manufacturer shall provide trained supervisors to assist in installation of equipment supplied and related appurtenances, to provide initial start-up and to instruct the City personnel in the operation and maintenance of the equipment.

B Field acceptance tests shall be performed as specified in each section of these specifications.

C All equipment supplied shall be a manufacturer's standard product with a proven satisfactory operations history and presently in commercial production. All equipment specified with a particular category shall be furnished by a single supplier and shall be products of manufacturers regularly engage in the production of such equipment.

D Any reference to a specific manufacturer or model number is for the purpose of establishing a quality and performance parameters only and is not to be considered proprietary. Any source or device that has the quality and performance criteria as specified may be acceptable.

E All equipment, parts, assemblies, and/or appurtenances shall conform to specifications and/or performance requirements in relation to workmanship, materials, installation and equipment.

F All equipment must meet all local, state, underwriter's laboratories, local utility company standards, and other applicable codes, whether or not called for on the drawings or in these specifications.

G Wherever the materials to be used are not shown or specified, the use of unspecified materials shall be based on their continuous and successful use and satisfactory performance at the proposed location and similar operating conditions.

H All materials used within the entire pumping installation shall be compatible (no dissimilar metals), corrosion and abrasion resistant and long lasting for seawater installations, subject to continuous wetting and drying.

1.014 SUBMITTALS AND OPERATIONS/MAINTENANCE MANUALS

A Whether specifically called for or not, the Contractor shall submit Operation/Maintenance Manuals and technical submittals/shop drawings for all significant items/pieces of equipment to the Engineer, as stipulated under Section 013300 SUBMITTALS.

1.015 PIPE SEPARATION REQUIREMENTS

A Water main relocation is not required if a water main has a minimum horizontal separation from a new sewer of at least 10-ft. or is above a new sewer with a vertical clearance greater than or equal to 18-inch. Where the vertical clearance is less than 18-inches and an existing water main crosses over or through the proposed new sewer, the water main shall be relocated as shown in the Contract Drawing details. If the sewer crosses over the water main, regardless of the vertical separation, both pipes shall be concrete encased for a distance of 10 ft. either side of the respective centerline. The use of restrained joints on ductile iron water pipe will be acceptable in lieu of concrete encasement.

1.016 LAWS AND REGULATIONS

A It is imperative that the Contractor is aware of and enforces all applicable federal, state, local and municipal laws, ordinances and regulations in relation to its employees, the materials used in the work, or the product/equipment performance.

B If any discrepancy or inconsistency is discovered in the plans, drawings, specifications, or contract documents for the work in relation to any such laws, ordinances, regulations, orders or decrees, the Contractor shall immediately notify Engineer of the conflict and seek its expeditious resolution. The Contractor shall, however, comply with all laws, ordinances, regulations, orders and decrees at all times. The Contractor shall also protect and indemnify the City and its officers, agents, and servants against any claim or liability arising from or based on the violation of any such laws, ordinances, regulations, orders, or decrees, whether by itself or its subcontractors or employees.

C Each and every provision of law referred to in this section shall be read and enforced as though it were included herein, and if through mistake or otherwise, any such provision is not inserted or if not correctly inserted, then upon the application of either party, the Contract shall forthwith be physically amended to make such insertion.

D The provision of Chapter 30, Section 39M of the Massachusetts General Laws, as last revised, shall be understood to be a part of this contract.

E The Contractor shall comply with the requirements of Massachusetts General Law Chapter 353 and the Acts of 1983 as related to Excavations in Public Ways.

F The Contractor shall enforce all the required safety measures as per AASHTO Guide on Occupational Safety on Highway Construction Projects, sub-part N.1926.550, relating to construction equipment clearances at overhead electric lines.

G Equipment utilized by the Contractor shall conform to the General Services Administration Construction Noise Specifications as effective on January 1, 1975, for stationary equipment. Equipment must not exceed 75 decibels (A) when measured at a distance of 50 feet from the noise source. The Contractor shall have construction sound enclosures or utilize other noise reduction

techniques if the equipment does not meet the noise level requirements. No separate payment shall be made for this item.

H The Contractor is subject to the requirements of the Clean Air Act, as amended, 42 U.S.C. 1857 et.seg; the Federal Water Pollution Control Act, as amended, 33 U.S.C. 1251 et.seg; and the regulations of the Environmental Protection Agency with respect thereto, as CFR Part 15, as amended from time to time.

I The Contractor agrees that any facility to be utilized in the performance of any non-exempt contract or sub-contract shall not be listed on the List of Violating Facilities issued by the Environmental Protection Agency (EPA) pursuant to 40CFR 15.20.

J The Contractor agrees to comply with all the requirements of Section 114 of the Clean Air Act, as amended (42 U.S.C. 1857c8) and Section 308 of the Federal Water Pollution Control Act, as amended (33 U.S.C. 1318), relating to inspection, monitoring, entry, reports and information, as well as all regulations and guidelines issued thereunder.

K In accordance with applicable laws, the Contractor shall furnish labor that can work in harmony with all other elements of labor employed or to be employed on the work and that he/she will comply fully with all laws and regulations applicable to awards made subject to M.G.L., Chapter 149, Section 44A. Without limiting the generality of the foregoing,

L Labor Harmony shall include the provision of labor that will not cause, cause to be threatened or give rise to either directly or indirectly, any work disruption, slow-downs or stoppages by employees of other Contractors, while performing any work or activities incidental thereto.

M The Contractor must comply with all requirements of Massachusetts Prevailing Wage Laws, M.G.L. c149, ɜɜ26 and 27; and the Equal Employment Opportunity and Anti-Discrimination Policies (EOEA) of the Commonwealth of Massachusetts 301. CMR 50.00.

1.017 CITY OF QUINCY ORDINANCES AND POLICIES

A The City of Quincy Blasting Ordinance, wherever applicable, shall be enforced on all projects located within the City limits. (Reference City Council Order No. 236 of 1988)

END OF SECTION

INTENTIONALLY BLANK

SECTION 012000 MEASUREMENT AND PAYMENT

PART 1 DECRIPTION

1.01 GENERAL

A The following subsections describe the measurement of and payment for the work to be done under the items listed in Section 004100, FORM OF GENERAL BID.

B All work performed as described in these contract documents shall be paid for under one or more of the items listed in Section 004100, FORM OF GENERAL BID. All other activities required in connection with performance of the work, including all work required under Division 1, GENERAL REQUIREMENTS, whether described in the contract documents or mandated by applicable codes, permits and laws, will not be separately paid for unless specifically provided for in the FORM OF GENERAL BID, but will be considered incidental to performance of the overall project.

C This section supplements, as applicable, the measurements and payment provisions for each of the pay items under the technical sections.

D Measurement and payment for each unit or lump sum price stated in the Section 004100, FORM OF GENERAL BID shall constitute full compensation as herein specified for each item of work completed in accordance with the drawings and specifications. The value of each item listed in Section 004100, FORM OF GENERAL BID shall constitute full compensation for complete compliance with the requirements of that item, including all labor, equipment, materials, tools, incidental work and construction methods.

E The payment items listed herein and in Section 004100, FORM OF GENERAL BID are intended to provide full payment for the work shown on the drawings and specified herein. Any work called for or implied in the documents but not listed as a payment item shall be considered incidental to the overall project.

F Unless otherwise noted, any item requiring excavation shall include all earthwork required for each respective item and shall include compensation for disposal of surplus excavated material, and installation of all necessary sheeting and bracing, and shall be considered part of the item as listed in Section 004100, FORM OF GENERAL BID.

G Unless otherwise noted, each item specified or shown on the drawings shall be furnished and installed in accordance with the technical section whether a specific applicable payment item exists or not.

H In all items involving excavation, the price shall be based on doing the entire excavation in earth. Where rock is excavated, the price therefor shall be in addition to the cost of excavating the earth, and no deduction shall be made in the amount for earth excavation.

I All excavation, backfilling, compaction of excavated and borrow materials, sheeting, dewatering, bedding, furnishing, laying, jointing, testing pipe, tracer tape (if required), sidewalk replacement, curbing replacement, loaming and seeding, and cleaning up required for the installation of all pipes, conduits and miscellaneous structures (sewer, water and drain lines, catch basins, manholes, handholes, conduit, ducts, test pits, planting pits, signage and fence posts, fire alarm, hydrants and valves, service connections, etc.etc.) shall be considered included in the contract unit prices/lump sums stated in Section 0041000, FORM OF GENERAL BID.

J Allowances for the items covered under Section 015530 UNIFORMED OFFICER FOR TRAFFIC CONTROL are estimated for Bidding purposes based on the scope of this Project. Payment for uniformed traffic police officers will be paid for on the basis of the actual hours worked and as described in Section 015530 UNIFORMED OFFICER FOR TRAFFIC CONTROL. The invoiced amounts paid by the Contractor may NOT include standard administrative charges levied by the Police Department.

K Unless otherwise indicated, the work required for Support of Excavations shall not be separately measured for payment, but shall be considered incidental to the project. No payment shall be made under this item for trench boxes, sheeting or steel plates used at the Contractor's option in the course of the work.

L The following activities, whether or not explicitly stated elsewhere in these documents, shall be understood to be included under the relevant Pay Items in Section 004100, FORM OF GENERAL BID to which the activity is directly or indirectly incidental to or necessary for a satisfactory completion of the item, unless otherwise noted in the Technical Specifications:

1. The Contractor shall acquaint itself with all work associated with each Pay Item and no claims will be allowed based on unfamiliarity with the detailed scope of work, complexity of operations or other site-specific conditions.

2. Each lump sum or unit price stated in the Bid Form shall constitute full compensation for the item and shall include all work required for or incidental to or mandated by the applicable codes, permits, regulations and laws to complete the work items satisfactorily in accordance with the drawings, specifications and/or the current industry standards of performance and workmanship. Such activities, whether or not expressly stated in the contract documents, shall not be paid for separately unless specified otherwise.

3. All public/private agency permits not included herein but necessary to carry out the work under this contract shall be obtained by the Contractor at its own expense.

4. All excavations and backfilling required to remove unsuitable materials below grade shown on the drawings shall be considered included in the lump sum or unit price.

5. All existing improvements (loamed and grassed areas, bushes, landscapes, roadways or other surfaces), facilities/amenities damaged due to the Contractor's operations shall be restored at the

Contractor's expense regardless of whether the damage is accidental, deliberate and/or due to construction work.

6. Testing requirements for all materials, equipment and new work (quality and workmanship) under this contract shall be as specified herein, or as per the applicable codes, standards and regulations, as related to each item. All such testing, when ordered by the Engineer, shall be at the Contractor's expense.

7. The services of manufacturer's representatives and supervisory personnel required to insure correct equipment/instrument/appurtenance installation, testing and operations including training of the City Personnel and preparation of Operations/Maintenance Manuals shall not be paid for separately. All costs associated with these activities shall be considered included in the lump sum or unit price.

8. All work associated with the clean up of site and new construction/ maintenance of roads and utility services during construction shall be at the Contractors expense.

9. All waste and unsuitable materials resulting from any item of work within the contract scope or from any other action related to the Contractors operations shall be disposed of by the Contractor at no cost to the City.

10. All useable materials, when declared surplus by the Engineer, shall either be disposed of off-site or transported and stockpiled at the DPW Yard or in another suitable area as directed by the Engineer at no additional cost to the City.

1.02 BASIS OF MEASUREMENT

A Before the contract award, the Contractor shall submit (for lump sum contract items only) to the Engineer, in triplicate, an itemized cost breakdown on all (significant contracts) work items. The quantity and cost breakdown for each item shall be reviewed and approved by the Engineer. When approved, the itemized breakdown shall become the basis for determining the progress payments and for negotiating change orders, if necessary.

B Measurement for work under this contract shall be done either in units as specified for each pay item in Section 004100, FORM OF GENERAL BID on the basis of percentage of the total works. The measurements/percentages shall be calculated by the Contractor and verified and agreed to by the Engineer.

C Said verification may be through mathematical calculations, payment vouchers, delivery receipts, field notes and/or actual inspection reports. The Contractor shall supply this information, as required, to determine the quantities/percentages for payment.

D All extra work shall be authorized in writing before the work is performed. All such work shall be paid for on the basis of the contract lump sum price breakdown/the contract unit prices as set forth in the Bid Form and described herein.

E No allowance shall be made for shrinkage, swelling, or voids for borrow materials, such as ordinary borrow, gravel, crushed stone, coarse aggregates, loam and other similar materials. For purposes of conversion, the average unit weight for such materials shall be at 130 lbs. /cu.ft. The average unit weight for rock materials (i.e. stones, stone chips, boulders and rocks) shall be at 170 lbs./cu.ft.

1.03 BASIS OF PAYMENT

A Payments shall be made for the actual work performed, in place and accepted by the Engineer. The payment shall be in accordance with the unit prices or lump sums as stated in the Bid Form. Payment for lump sum items shall be on the basis of a percentage of pay items completed, which shall be determined on the basis of the itemized cost breakdown agreed to above. No allowance or payment shall be made for any materials or equipment delivered and stored on site or for any materials, equipment or item of work, including labor and services, which are not incorporated in the work, unless specifically agreed to an approved by the Engineer.

1.04 PARTIAL PAYMENTS

A Upon presentation by the Contractor of certified copies of paid invoices, the Contractor may include in his Application for Payment to the City, advance payments for acceptable reinforcing steel, structural steel, stone, piles, culvert pipe or other non-perishable materials purchased expressly for the work and delivered on the work or in approved storage place at the site, but which materials are not considered as erected or complete in place under the items of the Contract, and for which partial payment would not be made until such materials and items were erected or complete in place.

B If it is impossible due to lack of area on the site or other valid reason, the Contractor may request in writing, permission from the Engineer to store materials off the site and still have the materials pad as material on hand and the engineer may approve payment. This request will state the reason for the request, location of proposed storage site, methods that will be employed to insure that material is properly protected and the materials will be used on the particular project and any other information as may be deemed necessary in order to evaluate the request. No advance payment for material stored off site will be made until written approval of the Engineer has been obtained. The amount to be included in the Application for Payment will be determined by the Engineer up to a maximum of 100% of the value of the materials as shown by the certified copies of the paid invoices. Payments will not be approved when the invoice value of such material as determined by the Engineer, amounts to less than $1,000.

1.05 INCREASED OR DECREASED CONTRACT QUANTITIES

A The City reserves the right to increase or decrease the quantity of any particular Item of Work.

B Where the quantity of a Unit Price pay item in this Contract is an estimated quantity and where the actual quantity of such pay item varies more than twenty-five (25%) percent above or below the estimated quantity stated in this Contract, an equitable adjustment in the Contract Price for that pay item shall be negotiated upon demand of either party. The equitable adjustment shall be strictly based upon any increase or decrease due solely to the variation above one hundred twenty-five (125%) percent or below seventy-five (75%) percent of the estimated quantity. In this regard, no allowances will be made for loss of anticipated profits suffered or claimed by the Contractor resulting directly or indirectly from such increased or decreased quantities or from unbalanced allocation among the contract items from any other cause.

1.06 APPLICATION FOR PAYMENT

A After the percentages of the total work to be invoiced have been verified and accepted by the Engineer, the application for payment shall be submitted in writing to the Engineer for final review and processing. Except for special permission, all applications for payment shall be on a "once a month" basis.

B The Engineer shall have ten (10) working days to review the application for correctness of quantities figures, completeness of supporting documentation and recommending the application for payment or returning application to the Contractor for additional information, revisions, and/or substantiation of amounts/quantities being invoiced.

C It must be clearly understood that once a payment application is recommended for payment, it may take from 30-60 days (depending on the source of project funds) before the Contractor receives the actual payment. The Contractor shall not be eligible for any interest payments on amounts due during these periods.

D Each payment application must be accompanied by the following documentation. No application for payment shall be processed unless it is prepared in accordance with the City format, is complete in all respects and is properly signed by the Contractor and the Resident Engineer.

1. Monthly progress report highlighting the major activities, problems (if any) and percentage of project complete to date and the forecast completion date.

2. Documentation supporting the quantities being invoiced (calculations, material/delivery slips, etc.)

3. Itemized statement on cost/quantity overruns, along with justification and proof of Engineer's authorization.

4. Certified payrolls for period being invoiced.

5. Statements and reports on the status of minority work force, Quincy residents employed, and MBE/WBE participation and performance (as applicable).

1.07 RETAINAGE

A The City shall withhold, as retainage, an amount equal to five percent (5%) of each progress/partial payment amount. The total amount retained or its percentage in relation to the total contract amount may not be reduced to assure quality of work, timely project completion and to cover any project deficiencies (materials, equipment and workmanship), restoration/replacement of improvements, facilities and amenities damaged due to Contractors operations.

B The percentage and/or amount of monies retained cannot be reduced or released until the following conditions are met:

1. The project is complete in all respects and all contractual obligations under Division 01, Section 013000: SUBMITTALS. A certification to this affect shall be required from both the Contractor and the Engineer before either the retainage amounts are returned or the contract closeout.

2. Before the final payment, all deliverables due the City must be received and acknowledged as satisfactory by the Engineer.

3. The project performance and payment bonds currently in force and shall remain in full effect from the date of project completion, as defined above, to the end of the Warranty Period, as specified or as applicable.

1.08 REIMBURSEMENT FOR CITY SERVICES

A Unless a specific work or an operation is requested or authorized to be performed by the City, beyond the agreed project construction work hours (normal), the Contractor will be required to reimburse the City for the cost of services rendered by a Resident Engineer or other City Engineering/Maintenance personnel beyond the normal project work hours.

B The City personnel operate on a five day work schedule, excluding Saturdays, Sundays and Legal Holidays. The telephone number for Engineering/Construction personnel is (617) 376-1950. The telephone number for the Maintenance personnel is (617) 376-1925.

C The Contractor shall be required to reimburse the City for the services of traffic police where it is beyond agreed hours, necessitated for the convenience of the Contractor, or because the Contractor is behind schedule and is on make-up schedule, or site management/control by the Contractor is causing hardship and safety concerns for an orderly conduct of business activities and public safety.

END OF SECTION

SECTION 013300 SUBMITTALS

PART 1 GENERAL

1.01 DESCRIPTION OF REQUIREMENTS

A. This Section specifies the general requirements for technical and other submittals as related to materials, methods, equipment/appurtenances, special procedures and contract administrative matters. Typical submittals include shop drawings; product data; procedures for various treatments/workmanship and temporary work and facilities; contract schedules, reports, correspondence and similar activities. Additional submittal requirements are listed under the General Conditions and within the Technical Specifications.

PART 2 PRODUCTS

NOT USED

PART 3 EXECUTION

3.01 CONSTRUCTION SCHEDULES

A. The Contractor shall, within ten (10) days after the effective date of the Agreement, submit to the Engineer for approval, a detailed manpower, equipment and construction activity schedule to complete the work within the time allowed. The Contractor shall update the schedule every two weeks and resubmit the same duplicate until the project is completed. The Contractors progress schedule shall show the actual project progress as percentage of the total project vs. Contract completion time.

B. The Contractor shall also be required to submit, each month, a written project progress report, details of cost/quantity overruns where applicable, certified payrolls.

3.02 SHOP DRAWINGS

A. As required by the General Conditions, Contractor shall submit a schedule of shop and working drawing submittals

B. Shop drawings, as defined in the General Conditions and Technical Specifications, and as specified herein include, but are not necessarily limited to: custom-prepared data such as equipment design basis, manufacturer data sheets, equipment characteristics/performance data, fabrication and erection/installation drawings, dimensions, equipment setting diagrams, manufacturer instructions, custom templates, instrumentation and controls, foundation details, coordination drawings, and including required certifications, as applicable.

C. In accordance with the accepted schedule, the Contractor shall submit promptly to the Engineer, through its authorized resident representative at the job site, or by electronic transmission one (1) copy each of shop or working drawings required as noted in the specifications, of equipment, structural details and materials fabricated especially for this Contract. When submittals require physical samples or submittals, in accordance with the accepted schedule, the Contractor shall submit promptly to the Engineer by mail, four (4) copies each of shop or working drawings.

A. One (1) copy of the shop and working drawings and/or catalog cuts will be returned to the Contractor electronically if the submittal allows. Two (2) copies of the shop and working drawings and/or catalog cuts will be returned to the Contractor if the original submission was made via mail, and the response requires a physical response. The Contractor shall furnish additional copies of such drawings or catalog cuts when he needs more than two copies or when so requested.

B. All shop and working drawings shall be submitted to the Engineer by and/or through the Contractor, who shall be responsible for obtaining shop and working drawings from his subcontractors and returning reviewed drawings to them. All shop and working drawings shall be prepared on standard size, 24-inch by 36-inch sheets, except those, which are made by changing existing standard shop or working drawings. Each shipment of drawings shall be accompanied by the Engineer's (if applicable) standard shop drawing transmittal form on which is a list of the drawings, descriptions and numbers and the names mentioned above.

C. The Contractor shall make submittals in accordance with approved schedule, and in a sequence that would not cause any delays. The submittals shall contain:

1. Date of submission along with the dates of any previous submission(s),

2. Project title,

3. Submittal identification number and title,

4. Names of the Contractor, supplier, and the manufacturer, along with identifying the product, with the specification section number,

5. Significant dimensions,

6. Standards, (ASTM or Federal Specification Number), and

7. Listing of all deviations from Contract Specifications.

D. Only drawings that have been prepared, checked and corrected by the fabricator should be submitted to the Contractor by his subcontractors and vendors. Prior to submitting drawings to the Engineer, the Contractor shall check thoroughly all such drawings to satisfy himself that the subject matter thereof conforms to the Contract Documents in all respects. Shop drawings shall be reviewed and marked with the date, checker's name and indication of the Contractor's approval, and only then shall be submitted to the Engineer. Shop drawings unsatisfactory to the Contractor shall be returned directly to their source for correction, without submittal to the Engineer. Shop drawings submitted to

the Engineer without the Contractor's approval stamp and signature will be rejected. Any deviation from the Contract Documents indicated on the shop drawings must be identified on the drawings and in a separate submittal to the Engineer, as required under subsection 6.17 Shop Drawings and Samples; C. Submittal Procedures, Paragraph 3 of the 2002 General Conditions.

E. The Contractor shall be responsible for the prompt submittal and resubmittal, as necessary, of all shop and working drawings so that there will be no delay in the work due to the absence of such drawings.

F. No material or equipment shall be purchased or fabricated especially for this Contract nor shall the Contractor proceed with any portion of the work, the design and details of which are dependent upon the design and details of equipment or other features for which review is required, until the required shop and working drawings have been submitted and reviewed by the Engineer as to their general conformance and compliance with the project and its Contract Documents. All materials and work involved in the construction shall then be as represented by said drawings

G. The Engineer will review the shop and working drawings as to their general conformance with the design concept of the project and general compliance with the information given in the Contract Documents. Corrections of comments made on the drawings during the review do not relieve the Contractor from compliance with requirements of the Contract Documents.

H. The review of the shop drawings is general and shall not relieve the Contractor of the responsibilities listed under Section 3.06 herein. The Contractor shall make any corrections or changes in the submittals required by the Engineer and resubmit until approved. The Engineer will review submittals once upon original submission and a second time if the Engineer requires a revision or corrections. If additional reviews are required, the Contractor shall reimburse the Owner amounts charged to the Owner by the Engineer for performing any review of a submittal for the third time or greater until approved.

I. With few exceptions, shop drawings will be reviewed and returned to the Contractor within 14 days of submittal.

3.03 PRODUCT DATA

A. Product data as defined herein include, but are not necessarily limited to: manufacturer standard product samples and product data, such as assembly instructions, materials, printed performance curves and operational-range diagrams based on actual shop tests (head capacity, efficiency, NPSH and horsepower, etc.), production/ quality control, inspection/test reports, certifications, mill reports, operation and maintenance instructions, recommended spare-part list, and printed product warranties, as applicable.

B. Shop Drawings shall show the principal dimensions, weight, structural and operating features, space required, clearances, type and/or brand of finish of shop coat, grease fittings, etc., depending on the subject of the drawings. When it is customary to do so, when the dimensions are of particular importance, or when so specified, the drawings shall be certified by the manufacturer or fabricator as correct for this Contract.

3.04 SPECIAL PROCEDURES

A. Special procedures as defined herein include, but are not necessarily limited to certain non-standard and site specific construction methods, that may, for example, be required in certain situations for deep excavations/embankments, piling, dewatering, shoring, sheeting, detours, traffic management and other temporary works and facilities.

3.05 CONTRACT ADMINISTRATION

A. Contract administration activities as defined herein include, but are not necessarily limited to all contract correspondence, invoices, reports on labor, equipment, schedules, estimates, forecast cash flows, claims and change orders, etc.

3.06 CONTRACTOR'S RESPONSIBILITIES

A. The Contractor shall review all shop drawings, product data/ samples prior to submission and verify that:

1. Actual field measurements and dimensions are compatible.

2. Service/design conditions are met.

3. Deviations from specifications, if any, are clearly stated.

4. The item/equipment/material conforms to the specifications.

B. Each shop drawings, product sample and catalog data submitted by the Contractor shall be signed certifying that:

"I hereby represent that I have determined and verified all field measurements, field construction criteria, materials, dimensions, catalog numbers and similar data and I have checked and coordinated each item with other applicable approved shop drawings and all Contract requirements."

Shop drawings not complying with the above shall be returned. The Engineer review shall be only for general conformance with the specification and design concept. This review does not constitute a rigorous design check.

C. The review and approval of shop drawings, samples or catalog data by the Engineer shall not relieve the Contractor from its responsibility from providing materials, equipment and level of workmanship, as specified.

D. No portion of the work requiring shop drawings, sample, or catalog data shall be started nor shall any materials be fabricated or installed prior to approval by the Engineer. All fabrication, materials, or on-site construction not conforming to approve shop drawings and data shall be corrected at the Contractor's expense.

3.07 SYSTEM TESTING, OPERATIONS & MAINTENANCE

A. The Contractor shall be responsible for conducting all start-up and operation tests as specified or as directed. All tests shall comply with the following:

B. All laboratory test of material, finished items, or equipment shall be made by bureaus, laboratories, or agencies approved by the City and copies of all test reports shall be submitted in duplicate by the laboratory to the City. The Contractor shall pay the cost of such tests.

C. Any additional test required beyond those required under these specifications may be ordered by the Engineer to settle disagreements with the Contractor. If the work/equipment/material is defective, the Contractor shall pay all costs of the extra tests and shall correct the work. If the work is satisfactory, the City will pay for the additional tests.

D. All start-up and commissioning tests shall be conducted as specified for each individual component separately and then for the total system as a whole. All start-up and commissioning tests shall be conducted under factory-trained supervision and certified as in compliance with the specifications and requirements.

3.08 OPERATION AND MAINTENANCE INSTRUCTIONS

A. The Contractor shall be responsible for supplying six (6) copies of written operations and maintenance manuals. The manuals shall be comprehensive enough to operate and maintain lighting control and irrigation systems, etc. (electrical, electronic, and other systems and the associated equipment).

The instructions shall be prepared as a systems manual applicable solely to a particular system and all equipment related to it. The manual shall include, as a minimum:

1. General systems descriptions along with operating instructions for each major system component, as applicable or as determined by the Engineer.

2. Instructions for all adjustments, calibrations and/or testing which must be performed at initial system start-up, along with adjustments to be made after the replacement of key components and adjustments which must be made in the course of preventive maintenance, as specified by the manufacturer.

3. Service instructions for major components not manufactured by the main equipment manufacturer.

4. Schematic diagrams for electronic equipment, the detail parts of which are normally repairable by the station operator, need to be included and shall not be substituted for an overall schematic diagram.

5. Complete equipment characteristics and performance data on pumps, motors, generators, gas/diesel engines and other parts/equipment shall be included in the operations/maintenance manual.

6. Facility layout drawings should show locations of all equipment such as valves, piping, bar racks and other items.

7. List of spare and consumable parts, with part numbers, along with addresses of local suppliers.

3.09 CONTRACT CLOSE-OUT

A. The Contractor shall provide to the Engineer the following before the close of the contract and before submitting the final application for payment:

1. Correspondence and back up for change orders and field changes.

2. Complete file of approved shop/erection drawings and wiring diagrams.

3. Log of all material and equipment delivered, including certificates and test results, as applicable.

4. Copies of all requisitions for payment, along with detailed substantiation of all quantity and cost overruns.

5. All labor and wage notices required by law.

6. All initial, interim and final reports on Minority Workers (MBE's, WBE's, and the percentage of City of Quincy residents employed under the contract).

7. All operation and maintenance manuals for all equipment supplied, including a list of spare parts with part numbers and supplier's address.

8. Four (4) sets of reproducible as-built drawings, and copies of all materials/equipment, work quality and other tests/systems.

9. All additional permits not included in these specifications.

10. Description of location and ties to survey markers and monuments installed under the contract.

11. Final reports on the corrective work based on the deficiencies noted during the initial and final acceptance, walk-through, inspections and tests.

12. Delivery of spare parts, as specified.

END OF SECTION

SECTION 015000 CONTROL OF WORK

PART 1 CONSTRUCTION

1.01 PROJECT SCHEDULES

A. The Contractor shall furnish plant and equipment to secure a satisfactory quality of Work and a rate of progress to insure a timely completion of the work.

B. The Contractor shall follow the agreed construction schedule, and all work progress shall be monitored against the on a bi-weekly basis, as required.

C. Refer to Section 011000 SUMMARY OF WORK for Project duration and milestones.

1.02 SITE SUPERINTENDENCE & WORK FORCE

A. The Contractor shall provide, at its own expense, during the entire course of the work, a competent full-time job superintendent to supervise the Contractor's employees, equipment operations and the general coordination and management of the project. The superintendent shall not work part-time as a tradesman, nor shall he be removed from the job except with the written permission of the Engineer.

B. The Contractor shall furnish a labor force, which will work in harmony and accord with all other labor forces taking part in, or connected with this project. The Contractor shall promptly remove from the work on this project any superintendent, assistant or workman who, in the opinion of the Engineer, is incompetent, unskillful, disruptive, or disorderly, and no person so removed from the work shall be re-employed on this project without the Engineer's written consent.

1.03 COORDINATION WITH LOCAL AGENCIES

A. The Contractor shall coordinate its activities with the Police, Traffic, Fire and Public Works Departments in the City, as required.

B. The Contractor shall maintain all area services and public amenities at all times and shall provide the Public Works Department with an address at which it can be contacted in an emergency. Upon notification by the City or the Engineer, the Contractor shall promptly restore services or make repairs as necessary or as directed.

C. The Contractor shall immediately notify utility companies of any damage to their utilities resulting from its construction operations.

D. The Contractor shall notify **DIGSAFE at 1-800-322-4844** at least 72 hours before excavating in any public way.

E. The Contractor shall give at least 48 hours written notice to the Engineer and the effected businesses, utilities, residents and abutters prior to the commencement of work on roads and utilities effecting traffic safety and safe access for abutters and performance of other normal area activities.

F. During the progress of the work, the Contractor shall remove debris, sweep and sprinkle water in work areas, maintain the area as necessary to minimize the creation and dispersion of dust. Calcium chloride shall not be used to control the dust problems.

1.04 SITE WORK

A. The Contractor shall, without additional compensation, be required to provide safe and convenient access to all abutters during the prosecution of the Work.

B. All construction areas shall be adequately safeguarded by providing temporary barricades, caution signs, lights and other means to prevent accidents to persons, and damage to property. The Contractor shall, at its own expense, provide suitable crossing from travel by pedestrians and workmen and take precautions to prevent injury to the public due to its construction operations. All excavated materials, equipment, or stockpiles that could be dangerous to the public shall be protected, barricaded, well lighted at nights, and/or removed off-site as directed by the Engineer.

C. The Contractor shall be responsible for the protection of all public and private property. Any direct or indirect damage done to public or private property for any reason due to the Contractor's operations shall be restored by the Contractor, at its own expense to a condition equal to or better than existed before the damage.

D. All open excavations shall be adequately safeguarded by providing temporary barricades, caution signs, lights, flares and other means to prevent injuries to persons and damage to property. The Contractor shall, at its own expense, provide suitable and safe means for completely covering all open trench excavations (backfilling or covering with steel plates of adequate strength) and for accommodating travel when work is not in progress. Bridges provided for access to private property during construction shall be removed when no longer required.

E. Test pits for the purpose of locating underground pipe lines, structures, or to determine the sub-surface conditions prior to or during construction shall be excavated and backfilled by the Contractor at his own expense regardless of whether the test pits are dug at the direction of the Engineer or for the convenience of the Contractor. Test pits shall be backfilled immediately and the surfaces restored and maintained in a manner satisfactory to the Engineer.

F. All precautions shall be taken to prevent freezing or damage to any of the exposed or partially uncovered utility lines. All trenches shall be backfilled as soon as possible and immediately followed by an installation of temporary bituminous surface. The roadway shall be free of construction debris and excavated material and shall be relatively smooth to provide safe passage.

G. Necessary access for fire apparatus and other emergency vehicles must be maintained at all times. Fire hydrants and water holes for fire protection on or adjacent to the project site shall be kept

accessible to the fire apparatus at all times, and no obstructions shall be placed within 10 feet of any such facility.

H. When work at the site necessitates the temporary placement of vehicles, equipment, materials or workers in public streets, sidewalks or walkways, the Contractor shall provide and use all necessary warning devices, barricades, signs, special apparel, etc., in the performance of the work, as set forth in Section 250 of the Standard Specifications.

I. No pavement work shall be done between December 15th and March 31st unless specifically permitted by the Engineer. Therefore, the Contractor shall not begin and construction which cannot be satisfactorily completed before December 15th. The Contractor shall not have any claim for extension of time for completion of the Work under this contract as a result of this restriction.

1.05 INTERFERENCE WITH EXISTING WORKS

A. The Contractor shall at all times conduct its operations so as not to interfere with the existing works. The Contractor shall develop a program, with the approval of the Engineer and interested officials, to provide for construction and putting into service of the new works in an orderly manner.

B. All work connected with cutting into and reconstruction of existing pipes or structures shall be planned to interfere with the operation of the existing facilities for the shortest possible time when the demands on the facilities best permit such interference.

C. The Contractor shall have no claim for additional compensation by reason of delay or inconvenience in adapting its operations to meet the above requirement.

D. Pipe lines will be located substantially as indicated on the drawings, but the City reserves the right to make modifications in alignment, sizes, fittings and appurtenances to suit field or the existing system operation/design conditions. This type of modification shall not relieve the Contractor from his contractual obligations in laying, jointing, and installing difference additional items, as required.

E. Where dimensions and location of existing structures are of importance in the installation or connection of any part of the work, the Contractor shall verify such dimensions and locations in the field at its own expense, before fabricating or ordering any material or equipment.

1.06 INTERFERENCE WITH STREETS/SIDEWALKS

A. The Contractor shall not close or obstruct any portion of a street, road, or private way without obtaining Apermits to perform work within limits of public ways from the Department of Public Works (DPW).

B. Streets, roads, private ways and walks under construction shall be maintained so as not to endanger the public/private properties and safety of the traveling public and residents at all times. The Contractor shall be fully responsible for all damages arising out of its operations and for the adequacy of safety measures provided at each site.

C. If the closure of a street of road is necessary, the Contractor shall notify the Police, Fire, Traffic and Public Works Departments and shall cooperate with the Traffic Department in the establishment of alternate routes. The Contractor shall provide and install the required number of detour signs (plainly marked and well-lighted) and take all other safety measures necessary to minimize confusion.

D. Along the location of work, all fences, stone walls, curbs, drives and walks, bushes, trees, shrubbery and other physical features which are within the limits of the streets or are associated with private property shall be protected to the satisfaction of the Engineer and to the satisfaction of the property owner(s).

E. Fences and other features removed by the Contractor for site access are to be restored in the location indicated by the Engineer as soon as conditions permit. All damages to existing physical feature shall be repaired to the satisfaction of the Engineer and the satisfaction of the affected property owner(s). All protection, repair, restoration and/or replacement work required shall be at the Contractor's expense.

1.07 PROTECTION/RELOCATION OF EXISTING STRUCTURES/UTILITIES

A. The Contractor shall assume full responsibility for the protection of all buildings, structures/utilities, public or private, including poles, signs, services to buildings, utilities in the street, (gas, water, sewer, drains, the electric and telephone, cable and the associated appurtenances) whether or not these are shown on the drawings. Any damage resulting from the construction operations shall be repaired at the Contractor's expense.

B. The City will provide the Contractor with all existing information to determine the location of existing lines and appurtenances for sewer, water and drainage systems. The Contractor, however, shall bear full responsibility for ascertaining the correct locations of all utility lines and associated structures and appurtenances before starting construction work.

C. The identification, relocation and/or resetting of hand-holes, manholes, vaults, valves, and other distribution control devices for the electric, gas, and telephone cable systems, shall be the responsibility of the respective utility companies. However, the Contractor shall obtain a comprehensive list of all such appurtenances from the utility companies, verify their physical location and shall be fully responsible for their protection during the construction operations.

D. All costs charges or damages resulting from lack of comprehensive pre-construction investigations related to the above items shall be borne by the Contractor.

E. Protection and temporary removal and replacement of existing utilities and structures as described in this section shall be considered as a part of the work under the Contract and all costs in connection therewith shall be borne by the Contractor.

F. In all public streets or private ways, except for City-owned utilities (water mains, sewers and drains), all relocation of utilities required for construction of the contract work shall be performed by the appropriate utility organization unless agreed otherwise by the utility company. The Contractor shall bear all expenses incurred because of utilities damaged due to its operations.

G. The operation of existing utilities shall not be interrupted except with written permission of the City and the operator of such utilities. The Contractor shall allow ample time and resources to implement all measures required for the continuation of existing utility operations. The Contractor shall request and coordinate all utility relocations, subject to permission of the Engineer. The Contractor shall comply with all regulations, standards, methods and procedures particular to the utility organizations involved.

H. Utility relocation for the sole purpose of making excavation easier for the Contractor shall not be allowed. Should the Contractor desire to relocate publicly-owned utilities such as water mains, sewers and drains for the sole purpose of making excavation easier, they shall be relocated at the Contractor's expense.

1.08 PROTECTION OF TREES AND SHRUBS

A. The Contractor shall avoid all damage to trees along and adjacent to the work area. No tree or shrub shall be removed without the approval of the Engineer.

B. If during the progress of the work, the Contractor encounters any upland state-listed species on the construction site, the matter shall be immediately reported to the Engineer, the Quincy Conservation Commission, and further reported to the appropriate state agencies having jurisdiction over these matters.

C. All measure required for the protection of trees, shrubs and other resource areas shall be considered to be part of the work to be done under these specifications at no additional cost to the City.

1.09 PROTECTION AGAINST EROSION

A. The Contractor shall take precautions during construction to minimize erosion and run-off of polluting substances such as silt, clay, fuels, oils, bitumen's, and calcium chloride into the water resource areas.

B. Disposal of drainage shall be in an area approved by the City. Drainage water shall not be disposed of until silt and other sedimentary materials have been removed.

C. Stacked bales of hay shall be provided at points where drainage from the work site leaves the site to reduce the sediment content of the water. Sufficient bales of hay shall be provided such that all flow will filter through the hay. Other methods that reduce the sediment content to an equal or greater degree may be used as approved by the Engineer..

D. Erosion control measures must be adequate to ensure that turbidity in the receiving water will not be increased more than 10 standard turbidity units (s.t.u.), or as otherwise required by the state or other controlling body, in waters used for public water supply or fish unless limits have been established for the particular water. In surface waters used for other purposes, the turbidity must not exceed 25 s.t.u., unless otherwise permitted.

E. Erosion Controls shall be installed in accordance with Section 312500 EROSION CONTROL and the Project Drawings. Payment for Erosion Controls shall be in accordance with Section 312500 and Section 012000 MEASUREMENT AND PAYMENT.

1.010 SITE CLEAN-UP AND DISPOSAL OF SURPLUS WASTE MATERIAL

A. The Contractor shall remove and dispose of all surplus and/or waste materials including surplus excavation, broken pavement, lumber, metal pipe and appurtenances, old equipment, temporary structures, and any other refuse from the construction operations.

B. Stone base and/or gravel base materials, manhole/catch basin castings, valves, gates, etc., if not used in the project, will remain the property of the City of Quincy unless specifically directed by the Engineer to dispose of the materials off-site. If the City decides to keep the materials, the Contractor will be required to load and haul the materials to the DPW yard at 55 Sea Street, Quincy, at no additional cost.

C. In order to prevent environmental pollution arising from the construction activities, the Contractor and sub-contractors shall comply with all applicable federal, state and local laws and regulations concerning waste material disposal, as well as the specific requirements stated in this section and elsewhere in the specifications specified herein.

D. The disposal of excess excavated materials in wetlands, stream corridors, and plains is strictly prohibited even if the permission of the property owner is obtained. Any violation of this restriction by the Contractor or its employees will be brought to the immediate attention of the responsible regulatory agency, with a request that appropriate action be taken against the offending parties.

E. All new and existing interfacing pipe lines, appurtenant structures within the project limits and the adjacent effected section shall be left in a clean and operable condition at the completion of the work. It shall be the responsibility of the Contractor to make certain that the new systems carrying run-off, sewage and water (as applicable) within the limits of this project operate efficiently to their points of discharge into the existing system. The Contractor without additional compensation shall remove all debris in pipes and structures as a result of the Contractor's operations.

END OF SECTION

SECTION 015200 TEMPORARY CONSTRUCTION FACILITIES

1.01 DESCRIPTION

A. The Contractor shall provide all temporary construction support facilities and controls, such as staging area, temporary stockpile areas, pre-construction surveys and bench mark and base lines to control and to layout the works as necessary and as specified or as directed by the Engineer. The contractor shall also provide all utility services and miscellaneous supplies required for satisfactory control of the works.

1.02 CONTRACTOR'S STAGING AREA

A. The Contractor's attention is directed to the fact that the City will not provide a staging area for the storage of construction plant equipment, material or supplies. All permits required for selection of staging area and the Contractor must obtain its proposed use from the local or State agencies having jurisdiction over the area. The cost of obtaining a staging area and the associated permits shall be considered to be included in the bid prices for the various items of work as listed in the Bid Form.

B. At no time shall any material, equipment, construction plant be stored on the beaches, public streets, private ways, sidewalks and other public areas.

C. The Contractor shall not enter or occupy private land outside of easements, except by permission of the landowner and the approving public agencies.

D. Only the equipment and materials ready for incorporation into the work shall be delivered and temporarily stacked on site. All materials and equipment thus delivered shall be placed so as not to injure any part of the work or the existing facilities and such that free access can be had at all times to all parts of the work.

E. All unrelated or idle construction plant waste and/or excess materials shall be removed from the site immediately.

1.03 ENGINEER’S FIELD OFFICE AND EQUIPMENT

A. The Contractor will not be required to provide Field Office.

1.04 REMOVAL OF TEMPORARY BUILDINGS AND EQUIPMENT

A. On or before the completion of the work, the Contractor shall, unless otherwise especially directed or permitted in writing, tear down and remove all temporary buildings and structures. The Contractor shall remove all temporary roads, staging areas, including tools and construction equipment from the site. The Contractor shall remove/cover all organic matter and waste materials in, under and around houses, and other buildings. The Contractor shall remove all rubbish and waste materials from the site and leave the area and adjacent properties in a neat and satisfactory condition.

END OF SECTION

SECTION 015500 TRAFFIC AND SAFETY CONTROLS

1.01 DESCRIPTION

A. The work under this Item shall conform to the Manual on Uniform Traffic Control Devices (Part IV, as amended), requirements of this section, the relevant provisions of Section 850 of the Standard Specifications, and work as shown or as directed.

B. The work shall include furnishing, installing and maintaining various traffic control devices for the protection of area residents, the traveling public and workers during construction operations.

C. All signs, barricades, cones and drums shall have Encapsulated Lens Reflective Sheeting in accordance with Section M9.30.2 of the Standard Specifications.

D. The Contractor shall develop and coordinate a Traffic Control Plan for all work with the City of Quincy Planning and Community Development Department, Quincy Department of Public Works, Quincy Police Department for traffic control and the local school crossing guards.

All costs associated with preparation of and implementation of a Traffic Control Plan shall be the responsibility of the Contractor and shall be considered included in the contract lump sum/unit prices listed in Section 004100 FORM OF GENERAL BID.

1.02 FLAGS FOR ADVANCE WARNING SIGNS

A. Standard orange and red-orange flags (16-inch minimum) shall be mounted on all signs in advance of starting the work.

B. Flags shall be mounted as shown on page 6B-13 of the Mass. Manual on Uniform Traffic Control Devices (MUTCD) and shall not interfere with a clear view of the sign face.

C. Reflectorized plastic drums and the reflectorized plastic drums with flashers (Type A) shall be placed as directed by the Engineer.

D. Plastic drums shall not be less than 19-inches in any diameter transverse to the direction of traffic flow, nor less than 14-inches in any diameter.

E. Flexible reflective sheeting shall be applied to all plastic drums in accordance with the Drawings in the Standard Specifications.

1.03 PROVISIONS FOR TRAVEL AND PROSECUTION OF THE WORK

A. The Contractor shall submit a Schedule of Operations as provided for in the Standard Specifications, for the Engineer's approval before any work is started. The schedule of operations shall include a plan of construction procedures and the safety measures to be used during the execution of the work.

B. A work schedule incorporating all traffic control appurtenances and defining utilization of access points shall be submitted to the Engineer for approval. All temporary work shall be in conformance with Section 850 of the Standard Specifications, as last amended and supplemented by the following:

1. The Contractor shall provide such temporary bridging, steel plates, temporary pavement, wood-framed walkways, caution safety and other necessary signs directing the pedestrian/vehicular traffic towards unblocked and safe areas.

   In areas where the construction activity is in progress, the Contractor is required to install directional signs in front of businesses saying "OPEN FOR BUSINESS" or something similar for guidance of the shoppers. The Contractor shall provide safe access/egress, as defined above, to all businesses and abutters within the project area.

2. The Contractor shall schedule its operations so as to cause the least interruption at all times in the flow of traffic on existing roads during construction and shall provide for the safe and convenient passage of pedestrians and vehicles throughout the project area and the adjacent areas impacted by the construction operations.

3. During construction hours, traffic flow must be controlled by Uniformed Traffic Police Officers, in accordance with Section 015530 - UNIFORMED OFFICER FOR TRAFFIC CONTROL. Between the hours of 9:00 AM and 3:30 PM, a minimum of one moving lane shall be maintained on the roadways in each direction. During peak traffic hours, the Contractor may be required to open more than one moving lane in one or both directions, as directed by the Engineer.

4. For construction after normal work hours, on weekends, and holidays, at least one traffic lane with pull out areas must be made available to pedestrian and vehicular traffic. Gravel borrow and bituminous concrete needed to maintain temporary passable travel lane ramps to allow access and egress to abutting properties shall be provided as needed, by the Contractor.

5. Certain construction operations such as utility work and roadway/sidewalk reconstruction may restrict access/egress on some roads and to businesses and abutters. Under these circumstances, the Contractor is required to schedule his operations during off-peak hours or late evenings and in small stretches so that a particular work activity can be completed in the shortest possible time.

   The Contractor is required to give abutting property owners 48 hours notice of periods when access/egress will not be available. It is again stressed that the City of Quincy considers the access/egress to abutting residences and businesses of critical importance and the Contractor must implement provisions of safe access/egress.

6. Particular care shall be exercised to establish and maintain such methods and procedures that will not create hazards of any nature. Traffic control, safety devices and/or signs having messages that are irrelevant to normal traffic conditions will be removed or properly covered at the end of each work period. Signs are to be kept clean at all times and legends shall be distinctive and unmarred.

7. In areas of high pedestrian and vehicular traffic volume, the Contractor is required to remove all waste materials and construction equipment from the work site and clean and make the site and its approaches safe on a daily basis. The construction equipment shall not be parked overnight on the site or the adjacent roads unless permitted by the Engineer.

8. In the event that the digital controllers are not available from the manufacturer when needed, the Contractor shall provide temporary mechanical controllers at no extra cost.

9. Night watchmen may be required where special hazards exist.

10. Unless permission to close a street is received in writing from the City, all excavated materials shall be placed so that vehicular and pedestrian traffic is maintained at all times. If the Contractor's operations cause traffic hazards, appropriate safety measures satisfactory to the Engineer shall be implemented immediately.

11. Detours around construction will be subject to the approval of the City Traffic Engineer. where detours are permitted, the Contractor shall provide all necessary barricades, flashers, flashing arrows and sighs in conformance with the Local and State regulations and standards to divert the flow of traffic. The Engineer will strictly control the periods when traffic is being detoured.

12. The Contractor will be responsible for posting signage that clearly states that any vehicle impeding the progress of construction will be towed at the Owner's expense. If Contractor fails to post such signs, Contractor will be responsible for **all** towing charges.

13. The Contractor will be fully responsible for all injuries or claims, damage to public and private properties, and any violations of the local, state or federal regulations resulting from his construction operations whether or not police protection has been provided. The services of uniformed traffic police shall in no way relieve the Contractor of its responsibilities under the Contract.

END OF SECTION

INTENTIONALLY BLANK

SECTION 015530 UNIFORMED OFFICER FOR TRAFFIC CONTROL

PART 1 GENERAL

1.01 WORK INCLUDED:

A. This Section covers the provisions for furnishing Uniformed Officers for Traffic Control and Maintenance of Traffic.

1.02 DESCRIPTION:

A. The Contractor shall coordinate with the local jurisdiction's Traffic Control Officer to determine the number of Officers deemed necessary to provide for public safety and to maintain a smooth flow of traffic through the construction area(s) affected.

B. All uniformed traffic police personnel required for public safety and traffic control for construction projects located within the City shall be authorized by the Department of Public Work's Safety Officer and/or the Project Resident Engineer.

C. The intent of posting police details is to insure public safety and protection of property through appropriate traffic control. Police personnel are not to be employed as watchmen to protect the Contractor's equipment and materials. Nothing contained herein shall be construed as relieving the Contractor of any of his responsibilities for protection of the public and property under the terms of the Contract.

1.03 RELATED WORK:

A. SECTION 015000 CONTROL OF WORK AND MATERIALS

B. SECTION 015500 TRAFFIC AND SAFETY CONTROLS

PART 2 PRODUCTS

2.01 UNIFORMED OFFICERS:

A. Contractor shall provide the Traffic Control Officer with a minimum of 24 hours notice indicating the time of day, street location and confirm number of officers required for traffic control.

B. Contractor shall give the Traffic Control Officer a minimum of 2 hours prior cancellation notice should Contractor determine that due to weather or conditions beyond his control he would not need the scheduled officers.

C. Contractor shall pay for officer(s) at the prevailing rate established by the local police department should officers not be needed and the Contractor fails to cancel the officers as noted in 2.01.B above.

D. Where the Owner is paying directly for Traffic Officers and the Contractor cancels scheduled officers, the Contractor shall be responsible for payment of the wages for cancellations if not cancelled in accordance with 2.01.B and 2.01.C above.

E. While scheduling work in areas where uniformed traffic police is required, the Contractor must recognize that uniformed police are paid for a four-hour minimum. If uniformed police are arranged to work and weather or some other situation prohibits the work, the Police Department Detail Unit shall be notified at (617) 479-1212 before 5:30 AM on the day of intended work to cancel the work order. Unless the work order is canceled in time, the Contractor shall be charged at the rate of minimum four hours for each officer included in the detail. The Contractor shall be fully responsible for payment of all charges thus incurred.

2.02 SUBMITTALS:

A. The project construction contractor shall submit a forecast weekly traffic police detail schedule, at least 72 hours days prior to the start of the work. The schedule shall describe the nature and location of the work, the number of police personnel and the estimated number of police hours required for each location. The Contractor must also include justification for each uniformed officer being requested. All payment to the police for work under this contract shall be in accordance with the Massachusetts General Laws, Chapter 149, Section 34B, which states that reserve police officers shall receive the same prevailing wage rate as paid to regular police officers.

B. The Contractor shall submit copies of all traffic police invoices paid (include copy of cashed check paid to police) with its regular Application for Payment. These invoices shall clearly show the following:

1. the project name;
2. the officer's name;
3. location of assignment;
4. date of assignment;
5. hours of assignment; and
6. number of hours being invoiced.

PART 3 EXECUTION

3.01 OPERATION:

A. Contractor shall provide barricades, barrier fences, traffic signs, and other traffic control devices as required by the Owners Traffic Control Officer, or as directed by the Engineer, to protect the work area from traffic, pedestrians, and animals.

B. Contractor shall relocate barricades, signs and other devices as necessary as the work progresses as directed by the Owners Traffic Control Officer or the Engineer.

PART 4 MEASUREMENT AND PAYMENT

4.01 GENERAL

A. Reimbursement to the Contractor for uniformed traffic police details shall be made from amounts allocated under Pay Item 999999.01: Traffic Police Details in Section 004100 FORM OF GENERAL BID. Payment for uniformed traffic police officers will be paid for on the basis of the actual hours worked and paid for by the Contractor as verified by the Resident Engineer.

B. The set prices for Traffic Police Details are based on the prevailing hourly wage rates included in Division 00 BIDDING AND CONTRACT REQUIREMENTS.

C. Administrative fees associated with Traffic Police Details will not be allowed for this Project, and will not be paid.

D. The Contractor shall make actual payment to the traffic authority and the Contractor shall be reimbursed by the Owner through the payment estimate. If police wages change during the course of the Contract, the unit prices under this item will be changed accordingly.

E. Failure to include information decribed in Section 2.02.B along with a proof of payment with the "application for payment" shall result in non-payment of invoiced amount.

F. The measurement and payment provisions listed under Section 012000 MEASUREMENT AND PAYMENT shall supplement the above payment provisions, as applicable.

END OF SECTION

INTENTIONALLY BLANK

SECTION 015700 ENVIRONMENTAL PROTECTION

1.01 DESCRIPTION

A The Work under this section shall consist of all environmental mitigation measures designed to minimize various types of pollution and resource area contamination, including airborne dust, equipment noise, drainage and soil erosion, alteration/damaging or dumping hazardous waste or rubbish in resource areas. The Contractor shall furnish all labor, materials, tools and equipment and perform all work required for the prevention of environmental pollution resulting from its construction operations.

B The requirements set forth in this section are intended to minimize the adverse impacts on populated and cross-country areas, stream crossings, coastal areas, beaches, flood plains, marshes, wetlands, wild life and marine life due to construction activities in and adjacent to all resource areas.

C All work shall be in accordance with the applicable Local, State and Federal laws and regulations and the Quincy Conservation Commission's Order of Conditions.

1.02 NOTIFICATION

A The Engineer will notify the Contractor in writing of any non-compliance with the foregoing provisions. The Contractor shall, after receipt of such notice, immediately take corrective action. In case of non-compliance, the Engineer will order stoppage of all or part of the work until satisfactorily corrective action has been taken. No claim for an extension of time or for extra costs or loss incurred by the Contractor as a result of time lost due to any stop orders shall be made unless it was later determined that the Contractor was in compliance.

B Prior to commencement of the Work, the Contractor shall meet with the Engineer to develop mutual understandings relative to compliance of the environmental protection program.

1.03 CONSTRUCTION ACTIVITY

A Insofar as possible, the Contractor shall confine all activities, including clearing, grubbing, excavation and construction of works, to those areas defined by the plans and specifications. All land resources within the project boundaries and outside the limits of permanent work performed under this contract shall be preserved in their present condition or if damaged, shall be restored to their original condition after completion of construction.

1.04 PROTECTION OF WATER RESOURCES

A The Contractor shall not pollute streams, lakes or reservoirs, wetlands and beaches with fuels, oils, bitumens, calcium chloride, acids or harmful materials. It is the Contractor's responsibility to comply with all applicable Federal, State, County and Municipal laws regarding pollution of rivers/streams. Special measures should be taken to insure against spillage of any pollutants into public waters.

1.05 PROTECTION OF WETLANDS

A The Contractor shall make every effort to minimize disturbances within the areas designated as wetlands. Easement widths shall be limited to the widths shown on the drawings. The Contractor shall make sure that wetlands are restored to the conditions existing prior to construction.

B The Contractor shall carefully remove and stockpile the top 24-inches of soil. This topsoil material shall be used as backfill for the trench excavation top layer. The elevation of the trench is to be restored to the pre-construction elevations wherever disturbed by the Contractor.

C A trench box and/or sheeting or bracing shall be used to support the excavation in wetlands.

D Excavated materials shall not be permanently or temporarily stored in wetlands. Temporary storage areas for excavated materials shall be as directed by the Engineer.

E The Contractor shall be required to utilize timber or rubber matting to support equipment in wetlands. The timber or rubber matting shall be constructed in such a way so that it is capable of supporting all equipment loads necessary to complete the construction work. The timber or rubber matting shall be constructed of materials and placed so that, once removed, the material below the matting is not unduly disturbed, mixed or compacted in such a way that would adversely effect the recovery of the existing plant life.

1.06 PROTECTION OF EXPOSED AREAS

A The Contractor shall limit the area of land that is exposed and free from vegetation during construction. In areas where the period of exposure will be greater than two (2) months, temporary vegetation, mulching or other protective measures shall be provided as specified.

B Where temporary cover crop will be used, the Contractor shall insure that materials used for temporary vegetation are adaptive to the sediment control. Materials to be used for temporary vegetation shall be approved by the Engineer.

C Loaming and seeding or mulching of cross-country areas shall take place as soon after completion of work in that area as practicable. This shall be considered part of the clean-up work, and full payment for the work will not be made until it has been completed.

1.07 LOCATION OF STORAGE AREAS

A No excavated materials or materials to be used in backfill operations shall be stored within a minimum distance of fifty (50) feet of any watercourse or any drainage facility.

B No storage of equipment or materials shall be permitted in wetlands.

C In cross-country areas when excavating in wetland or flood plain, where no temporary diversion structure is required, the excavated material shall be placed on the uphill side of the trench so that the trench serves as a barrier between the excavated material and the wetland or flood plain.

1.08 HAY BALES AND SILT FENCES

A Adequate measures for erosion and sediment control such as the placement of baled hay or straw around the downstream perimeter of stockpiles shall be employed to protect downstream areas. The bales of densely packed hay with tightly bound biodegradable ties shall be installed as shown on the drawings . The bales shall be staked to prevent overturning, floatation, or displacement. All sediment deposited behind the bales of hay and silt fences shall be removed periodically.

B Where shown on the drawings or as directed by the Engineer, the Contractor shall erect and maintain a temporary silt fence. In wetlands and other resource areas, the Contractor shall line the limits of the construction easement with silt fences. The silt fence shall be used specifically to contain sediment from runoff water and to minimize environmental damage caused by construction.

C Erosion controls including haybales, siltfences, siltsocks and other erosion control measures shall be installed in accordance with Section 312500 EROSION CONTROL.

1.09 SOIL EROSION AND SEDIMENTATION CONTROLS

A The Contractor shall take effective measures during construction to minimize soil erosion and silting/sedimentation in the vicinity of construction areas.

B The Contractor shall not cause direct or indirect discharge of pollutants such as silt, clay, fuel oils, lubricants, cleaning agents, bitumen's, calcium chloride or any other material that may be hazardous or detrimental to watersheds, lakes, wetlands, beaches, marshes, streams, and public water, sewer and drain systems.

C Site generated drainage runoff whether due to storm run-off or the Contractor's dewatering and other operations shall not be allowed to shed on to the abutting properties.

D To reduce uncontrolled soil erosion, the site drainage runoff shall be conveyed through conduits, swales, gravel drains, etc., and disposed of in areas approved by the City.

E Site runoffs shall not be disposed of until silt, sediment and other deleterious materials have been removed through the use of hay bales, silt fences and other methods acceptable to the Engineer.

F During the course of construction, the Contractor shall, when directed, dispose, remove, relocate, or replace the hay bales and silt fences as directed by the Engineer. The Contractor shall also be fully responsible for removal and disposal of the collected sediment and debris behind the hay bales and silt fences as directed by the Engineer. The hay bales and silt fences shall remain in place until directed by the Engineer.

G Erosion control measures used for public water supply or fish culture must be adequate to ensure that turbidity in the receiving water will not be increased more than 10 standard turbidity units (s.t.u.) or as otherwise required by the State or other controlling body. In surface water used for other purposes, the turbidity must not exceed 25 s.t.u., unless permitted otherwise.

1.010 WATER HANDLING

A All water discharges from the Contractor's dewatering and/or water handling operations shall be filtered prior to being discharged into a receiving water.

B The water may be filtered through hay bales, a vegetative filter strip, or a vegetative channel. Discharge flow rate through these media shall not exceed one (1) foot per second. The sediment shall be cleared from the channel periodically.

C If water from dewatering operations is discharged over non-vegetated land, impermeable plastic sheeting must be laid over non-vegetated areas and sediment traps constructed at strategic locations to catch sediment.

D Any water discharged from the Contractor’s operations must be at least equal in quality to the receiving water. If the quality of the water being discharged is unacceptable, the Contractor shall employ whatever measures necessary to provide an acceptable water quality.

E All existing drainage facilities including, but not limited to, brooks, streams, canals, channels, ditches, culverts, catch basins, and drainage piping shall be adequately safeguarded so as not to impede drainage or to cause siltation of downstream areas. If the Contractor damages or impairs any of the aforesaid drainage facilities, these shall be repaired immediately.

F All drainage appurtenances shall be designed to remove suspended solids, oils and other such material. Baled hay or straw must also be used to trap sediment and prevent clogging of drainage systems.

G If interruption of existing drainage flows is necessary, the Contractor shall provide, maintain, and operate all temporary facilities such as dams, pumping equipment and conduits etc. required to by-pass flows past the construction area.

1.011 DUST CONTROL

A During the progress of the work, the Contractor shall conduct operations to maintain a dust free environment. Measures to control dust may include sweeping and applying water to streets, as necessary, to minimize the air borne dust.

B At no time shall calcium chloride or other chemicals be used for dust control.

1.012 NOISE LEVEL REQUIREMENTS

A Equipment utilized by the Contractor shall conform to the General Services Administration Construction Noise Specifications, effective as of January 1, 1975, for stationary equipment. Equipment must not exceed 75 Db (A) when measured at a distance of 50 feet from the noise source. The Contractor shall construct sound enclosures or utilize other noise reduction techniques if the equipment does not meet the noise level requirements.

1.013 CLEAN AIR AND WATER POLLUTION CONTROL ACTS

A The Contractor is subject to the requirements of the Clean Air Act, as amended, 42 U.S.C. 1857 et.seg; the Federal Water Pollution Control Act, as amended, 33 U.S.C. 1251 et.seg; and the regulations of the Environmental Protection Agency with respect thereto, at CFR Part 15, as amended from time to time.

1. The Contractor agrees that any facility to be utilized in the performance of any non-exempt contract or sub-contract shall not be listed on the List of Violating Facilities issued by the Environmental Protection Agency (EPA) pursuant to 40CFR 15.20.

2. The Contractor agrees to comply with all the requirements of Section 114 of the Clean Air Act, as amended (42 U.S.C. 1857 c8) and Section 308 of the Federal Water Pollution Control Act, as amended (33 U.S.C. 1318), relating to inspection, monitoring, entry, reports, and information, as well as all regulation and guidelines issued thereunder.

END OF SECTION

INTENTIONALLY BLANK

SECTION 016000 USE AND CONTROL OF MATERIALS

1.01 DESCRIPTION

A The work under this Item shall conform to the relevant provisions of Section 6.00, of the Standard Specifications, requirements of this section and the work as shown or as directed by the Engineer.

1.02 MATERIALS - APPROVALS - INSPECTIONS

A Unless otherwise expressly specified, only new materials and equipment shall be incorporated in the works. All materials and equipment to be incorporated in the work shall be subject to inspections and tests by the Engineer. No material shall be installed, fabricated or delivered to the work site without prior concurrence of the Engineer.

B As soon as possible after execution of the Agreement, the Contractor shall submit to the Engineer the names and addresses of the manufacturers/suppliers of all materials and equipment to be incorporated into the work. The Contractor shall submit prior to the placement of orders, data in sufficient detail to enable the Engineer to determine whether the manufacturer and/or the supplier have the ability to furnish a product meeting the Specifications.

C The Contractor shall also submit data relating to the materials and equipment, including the optional items in sufficient detail to enable the Engineer to evaluate the particular product and to determine whether it conforms to the Contract requirements.

D The Contractor shall furnish promptly all labor, materials, laboratory and other facilities to perform all inspections and tests to determine the acceptability of equipment and materials.

E When directed by the Engineer, the Contractor shall submit samples of materials, equipment for quality workmanship, and other special test results as the Engineer deems necessary to assure conformance with the specifications. All samples shall be furnished, taken, stored, packed, and shipped by the Contractor as directed. The Contractor shall furnish the required laboratory services to test the samples at no additional cost to the City.

F All samples shall be labeled to indicate the materials, the name of the building or work and location from where the sample was taken, and the name of the Contractor submitting the sample.

G The Contractor shall submit data and samples, or place orders, sufficiently early to permit inspection and testing before the materials and equipment are needed for incorporation in the work. The consequences of failure to do so shall be the Contractor's sole responsibility.

H When required, the Contractor shall furnish to the Engineer in triplicate, certified copies of manufacturer's shop, mill tests, reports from independent testing laboratories and other relevant data for materials and equipment furnished under the contract.

1.03 HAULING, HANDLING, STORAGE AND DISTRIBUTION OF MATERIALS

A The Contractor shall handle and haul all materials furnished and remove all surplus materials at the completion of the work. The Contractor shall provide suitable and adequate storage for all equipment and materials and shall be responsible for any loss of or damage to any equipment or materials. The Contractor shall be responsible for all damages to the work under construction during its progress and until completion and acceptance even though partial payments have been made under the contract.

B All suitable excavated materials not reused as backfill shall remain the property of the City and shall be stockpiled at a site provided by the City, at the City's discretion. The Engineer will determine material suitability, and all excavated materials determined to be unsuitable, shall become property of the Contractor and shall be disposed of at no additional cost to the City.

C Cement, lime, salts and other such materials shall be stored above the ground, properly covered, and kept completely dry at all times. All structural, miscellaneous, reinforcing steel shall be stored above the ground to prevent accumulations of dirt or grease, and in a position to prevent accumulations of standing water and to minimize rusting. Beams shall be stored in a manner to prevent accumulations of dirt, standing water, staining, chipping or cracking. Bricks, block and similar masonry products shall be handled and stored to prevent breakage, chipping, cracking and spalling.

D All mechanical equipment subject to corrosive damage, if stored outdoors (even though covered by canvas), shall be stored in a building to prevent injury. The building may be a temporary structure on the site or elsewhere but it must be satisfactory to the Engineer.

E All materials which have become so damaged as to be unfit for the use intended as specified shall be promptly removed from the site of the work, and the Contractor shall receive no compensation for the damaged material or its removal.

F Storage and demurrage charges by transportation companies and vendors shall be borne by the Contractor.

1.04 MATERIALS AND EQUIPMENT REMOVED AND STORED

A All materials directed to be removed and stacked shall be carefully dismantled and stacked at designated locations, and hauled to the City maintenance yard as directed by the Engineer.

B An inventory of materials to be delivered shall be made out by the Contractor, countersigned by the Engineer, and submitted to the person and/or persons receiving the materials at the DPW Yard.

C If the Engineer determines that any part of the stacked materials are unsuitable for re-use, or if the City decides to abandon part or all or such materials, said materials shall become the property of the Contractor and these materials/equipment shall be disposed of at no additional cost to the City.

1.05 REJECTED MATERIALS AND DEFECTIVE WORK

A Materials furnished by the contractor and condemned by the Engineer as unsuitable or not in conformance with the specifications shall forthwith be removed from the site and shall not be used elsewhere on the project.

B Any errors, defects or omissions in the execution of the work or in the materials furnished by the Contractor, even though they may have been approved, overlooked, discovered after installation, or already paid for, shall be forthwith rectified satisfactorily at the Contractor's expense.

END OF SECTION

INTENTIONALLY BLANK

SECTION 017700 PROJECT CLOSEOUT

PART 1 GENERAL

1.01 DESCRIPTION:

A The Contractor must employ at all times during the progress of his work adequate cleanup measures and safety precautions to prevent injuries to persons or damage to property. The Contractor shall immediately, upon direction by the Engineer provide adequate material, equipment and labor to cleanup and make safe any and all areas deemed necessary by the Engineer.

1.02 RELATED WORK:

A Section 00700 GENERAL CONDITIONS
B Section 011700 SPECIAL PROVISIONS
C Section 015000 CONTROL OF WORK
D Section 015700 ENVIRONMENTAL PROTECTION

PART 2 PRODUCTS

NOT APPLICABLE

PART 3 EXECUTION

3.01 DAILY CLEANUP:

A The Contractor shall clean up, at least daily, all refuse, rubbish, scrap and surplus material, debris and unneeded construction equipment resulting from the construction operations and sweep the area. The site of the work and the adjacent areas affected thereby shall at all times present a neat, orderly and workmanlike appearance.

B Upon written notification by the Engineer, the Contractor shall within 24 hours clean up those areas, which in the Engineer's opinion are in violation of this section and the above referenced sections of the specifications.

C If in the opinion of the Engineer, the referenced areas are not satisfactorily cleaned up, all other work on the project shall stop until the cleanup is satisfactory.

3.02 MATERIAL OR DEBRIS IN DRAINAGE FACILITIES:

A Where material or debris has washed or flowed into or has been placed in existing watercourses, ditches, gutters, drains, pipes, structures, such material or debris shall be entirely removed and satisfactorily disposed of during progress of the work, and the ditches, channels, drains, pipes, structures, and work shall, upon completion of the work, be let in a clean and neat condition.

3.03 REMOVAL OF TEMPORARY BUILDINGS, STRUCTURES AND EQUIPMENT:

A On or before completion of the work, the Contractor shall, unless otherwise specifically directed or permitted in writing, tear down and remove all temporary buildings and structures built by him; shall remove all temporary works, tools and machinery or other construction equipment furnished by him; shall remove all rubbish from any grounds which he has occupied; shall remove silt fences and hay bales used for trapping sediment; and shall leave the roads and all parts of the property and adjacent property affected by his operations in a neat and satisfactory condition.

3.04 RESTORATION OF DAMAGED PROPERTY:

A The Contractor shall restore or replace, when and as directed, any property damaged by his work, equipment or employees, to a condition at least equal to that existing immediately prior to the beginning of operations. To this end the Contractor shall do as required all necessary highway or driveway, walk and landscaping work. Materials, equipment, and methods for such restoration shall be as approved by the Engineer.

3.05 FINAL CLEANUP:

A Before acceptance by the Owner, the Contractor shall perform a final cleanup to bring the construction site to its original or specified condition. This cleanup shall include removing all trash and debris off the premises. Before acceptance, the Engineer shall approve the condition of the site.

END OF SECTION

SECTION 055000 METAL FABRICATIONS

PART 1 GENERAL

1.1 SECTION INCLUDES

A. Stainless steel railing framework

1.2 RELATED SECTIONS

A. Site Walls
B. Stone Paving

1.3 REFERENCES

A. ASTM International (ASTM):
1. ASTM A554 - Specification for Welded Stainless Steel Mechanical Tubing.
2. ASTM A666 - Standard Specification for Annealed or Cold-Worked Austenitic Stainless Steel Sheet, Strip, Plate, and Flat Bar.
3. ASTM E985 - Standard Specification for Permanent Metal Railing Systems and Rails for Buildings.

1.4 SUBMITTALS

A. Submit under provisions of Section 013000.

B. Shop Drawings: Indicate profiles, sizes, connection attachments, anchorage, size and type of fasteners, finishes, and accessories.

C. Verification Samples: For connections and terminations to be used, one full sized sample of each.

PART 2 PRODUCTS

2.1 MANUFACTURERS

A. Atlantis Rail Systems, 70 Armstrong Road, Plymouth, MA 02360, Telephone: 508-732-9191, Fax: 508-732-9798, Email: info@atlantisrail.com, http://www.atlantisrail.com/

B. Seco South, Inc., 2111 34th Way, Largo, FL 33771. ASD. Tel: (727) 536-1924. (888) 535-7326. Fax: (727)539-6314. Email: info@SecoSouth.com, www.secosouth.com,

C. Approved equal.

D. Requests for substitutions will be considered in accordance with provisions of Section 013000.

2.2 MATERIALS

A. Stainless Steel Rod: ASTM A 555, Type 316.

B. Stainless Steel Fittings: ASTM A 666, Type 316.

C. Stainless Steel Tubing: ASTM A, Grade Type 304.

D. Stainless Steel Strip, Plate, and Flat Bar ASTM A 666, Type 304.

2.3 HANDRAILS AND GUARDRAILS - GENERAL

A. Design, fabricate, and test handrail/guardrail assemblies in accordance with the most stringent requirements of ASTM E 985 and applicable local code.

B. See drawings for dimensions and configuration.

2.4 FABRICATION

A. Fit and shop assemble components in largest practical sizes for delivery to site.

B. Fabricate components with joints tightly fitted and secured. Provide spigots and sleeves to accommodate site assembly and installation.

C. Provide anchors and plates required for connecting railings to structure.

D. Exposed Mechanical Fastenings: Provide flush countersunk screws or bolts; unobtrusively located; consistent with design of component, except where specifically noted otherwise.

E. Supply components required for anchorage of fabrications. Fabricate anchors and related components of same material and finish as fabrication, except where specifically noted otherwise.

F. Exterior Components: Drill condensate drainage holes at bottom of members at locations that will not encourage water intrusion.

G. Grind exposed joints flush and smooth with adjacent finish surface. Make exposed joints butt tight, flush, and hairline. Ease exposed edges to small uniform radius.

H. Accommodate expansion and contraction of members and building movement without damage to connections or members.

PART 3 EXECUTION

3.1 EXAMINATION

A. Verify that field conditions are acceptable and are ready to receive work.

3.2 PREPARATION

A. Supply items required to be cast into concrete or embedded in masonry with setting templates, for installation as work of other sections.

3.3 INSTALLATION

A. Install in accordance with manufacturer's instructions.

B. Install components plumb and level, accurately fitted, free from distortion or defects.

C. Anchor railings securely to structure.

D. Conceal bolts and screws whenever possible. Where not concealed, use flush countersunk fastenings.

3.4 ERECTION TOLERANCES

A. Maximum Variation From Plumb: 1/4 inch (6 mm) per floor level, non-cumulative.

B. Maximum Offset From True Alignment: 1/4 inch (6 mm).

C. Maximum Out-of-Position: 1/4 inch (6 mm).

PART 4 – MEASUREMENT AND PAYMENT

4.1 METHOD OF MEASUREMENT

A. Metal Fabrications will be measured PER LUMP SUM for furnishing and installation of materials, equipment, labor, and all other incidentals required to furnish and install stainless steel handrails in accordance with this Specification and as shown in the drawings, and as directed by the Owner's representative. Payment will not be approved until satisfactory completion of the Maintenance Period.

4.2 BASIS OF PAYMENT

A. Payment for Metal Fabrications will include furnishing and installing all materials complete in place, including but not limited to all incidentals, guarantees and warrantees, as described in this SECTION and in the Drawings.

4.3 PAYMENT ITEMS

Item 05 50 00 METAL FABRICATIONS LUMP SUM

END SECTION 055000

INTENTIONALLY BLANK

SECTION 10 18 00 INFORMATIONAL KIOSKS

PART 1 - GENERAL

1.01 RELATED DOCUMENTS

A. Drawings and general provisions of Contract, including General and Supplementary Conditions, Division 00 and General Requirements, Division 01 Specification sections, apply to work of this section.

B. Examine all Contract Drawings and all other Sections of the Specification for requirements therein affecting the work of this Section.

C. All work under this section shall conform to section 700 and other applicable sections of the MDPW Standard Specifications for Highways and Bridges.

1.02 SCOPE

A. Furnish all labor, materials, equipment and perform all operations necessary for completion of the work of this Section as shown on the Drawings, as herein specified and as evidently required to properly complete, to the satisfaction of the Owner, the following items:
   1. Exterior Grade Digital High Pressure Phenolic Laminate (DHPL) Signs and Graphics for kiosks.
   2. 7-foot height surface mounted steel sign supports required for each kiosk, per manufacturer.

1.03 RELATED WORK UNDER OTHER SECTIONS

A. Miscellaneous Metals
B. Galvanizing and Metal Coatings

1.04 QUALITY ASSURANCE

A. Manufacturer: Obtain all products in this section from a single Manufacturer.

B. Installer: Installation shall be performed by installer specialized and experienced in work similar to that required for this project.

1.05 SUBMITTALS

A. Product Data: Submit Manufacturer's product data for specified products. Include material details for each sign specified.

B. Graphic Approval Samples: Submit 9 in x 15 in phenolic sample of section of typical project panel for approval of image quality and color fidelity.

C. Closeout Submittals: Submit maintenance data for installed products, including precautions against harmful cleaning materials and methods.

D. Submit warranty documents specified herein.

1.06 DELIVERY, STORAGE, AND HANDLING

A. Comply with Manufacturer's ordering instructions and lead-time requirements to avoid construction delays.

B. Shipping of products shall be within one week of approval of production art.

C. Deliver products in Manufacturer's original, unopened, undamaged containers with identification labels intact.

D. Store products protected from weather, temperature, and other harmful conditions as recommended by Manufacturer.

E. Handle products in accordance with Manufacturer's instructions.

1.07 WARRANTY

A. Manufacturer's Warranty: Submit Manufacturer's standard warranty document executed by authorized company official.

B. Warranty Period: Ten years from product ship date.

PART 2 – PRODUCTS

2.01 EXTERIOR GRADE DIGITAL HIGH PRESSURE PHENOLIC LAMINATE (DHPL) SIGNS AND GRAPHICS

A. Acceptable Manufacturers:
1. IZONE, 2526 Charter Oak Drive, Suite 100, Temple, Texas 76502-4844 (254) 778-0722 voice, (254) 778-0938 fax, (888) 464-9663 toll free http://www.izoneimaging.com, email: info@izoneimaging.com, contact: Mike MacEachern, email: mike@izoneimaging.com
2. Envirosigns Ltd, 2700 Fulton Drive NW, Canton, Ohio 44718, 888-492-5377 – phone, 570-694-2904 – fax, http://www.envirosigns.com, contact: Bob Blick, email: bob@envirosigns.com
3. Pannier, 345 Oak Road, Gibsonia, PA 15044, 800-544-8428 ext. 210, http://www.panniergraphics.com/, contact: Jamie Mohler, email: jlm@pannier.com
4. Substitutions: Submit in accordance with Section SUBMITTALS. Manufacturers shall provide a minimum of four customer references.

B. Acceptable Product: XT Digital High Pressure Phenolic Laminate as manufactured by iZone.

C. Display Laminate Requirements:
1. Width: 24 inches

2. Height: 72 inches
3. Thickness: 1/2 inch
4. Squared edges with 4 drill holes and 4 threaded holes per panel
5. Provide UV inhibiting top layer and compatible spray coating.
6. Mechanical Mounting to display frame shall be with appropriate tamperproof stainless steel fasteners.
7. Graphics:
    a. Graphics shall be subsurface and consolidated into the phenolic board by temperatures exceeding 275° F heat and pressure of 1200 PSI per Manufacturer's standard method.
    b. Lettering and Graphics: Provide sizes, colors, and type styles indicated on drawings and in schedules. Provide computer generated lettering, accurately reproducing letterform and executed in a clean, precise manner.
    c. Acceptable Materials: Use only non-rusting, non-degrading, compatible materials to fabricate sign and graphics. Steel and wood components are not acceptable.

D. Mechanical Performance Standards

Mechanical Property	ASTM Test		Standard
Compressive Strength	D695-84		1.800 x 104psi
Flexural Strength	D790-84a		
		Ultimate	1.877 x 104psi
		Modulus	1.690 x 104psi
Impact Strength	D256-84		0.64 ft-lbs/inch
Tensile Strength	D638-84		
		Ultimate	1.637 x 104psi
		Modulus	1.650 x 104psi
Bond Strength	D952-84		1.460 x 104psi
Bearing Strength	D953-84a		1.650 x 104psi
Rockwell Hardness	D785-65		70 (E Scale)
Liquid Absorption	D570-81		0.1%
Coefficient of Linear Expansion	D696-79		1.670 x 10-5in/°F
UV Resistance	ASTM G26/A		No Change After 2000 Hours
Boiling Water Resistance	LD3 Test (3,5)		No Change

E. FABRICATION – GENERAL
1. General: Comply with requirements indicated for materials, thicknesses, finishes, colors, designs, shapes, sizes, and details of construction.
2. Visual inspection of each panel shall reveal no visible cuts, hairline cracks or surface defects. All edges shall be smooth and cut within 1/32" of size required for installation.
3. Allow for thermal movement resulting from a maximum ambient temperature change (range) of 100 deg F (38 deg C).
4. Mill joints between multiple panels to a tight, hairline fit.

5. Preassemble signs in the shop to the greatest extent possible to minimize field assembly. Disassemble signs only as necessary for shipping and handling limitations. Clearly mark units for reassembly and installation, in a location not exposed to view after final assembly.
6. Conceal fasteners if possible; otherwise, locate fasteners to appear inconspicuous.
7. Form panels to required size and shape. Comply with requirements indicated for design, dimensions, finish, color, and details of construction.
8. Coordinate dimensions and attachment methods to produce message panels with closely fitting joints. Align edges and surfaces with one another in the relationship indicated.
9. Increase material thickness or reinforce with concealed stiffeners or backing materials as required to produce surfaces without distortion, buckles, warp, or other surface deformations.

F. Sign Copy and Graphics shall be provided by the City of Quincy. Contractor shall acquire licensing rights for all images incorporated into the signs from their respective sources.

2.02 STEEL SUPPORT FOR KIOSK

A. Contractor shall furnish and install 7-foot height surface mounted steel sign supports required for each kiosk, per manufacturer.

B. Supports and fasteners shall be weather- and vandal-resistant, suitable for exterior installation.

PART 3 – EXECUTION

3.01 EXAMINATION

A. Site Verification of Conditions: Verify installation conditions previously established under other sections are acceptable for product installation in accordance with Manufacturer's instructions.

B. Scheduling of installation by Owner or its representative implies that substrate and conditions are prepared and ready for product installation. Proceeding with installation implies installer’s acceptance of substrate and conditions.

3.02 INSTALLATION

A. Install product in accordance with Manufacturer’s instructions.

B. Install product in locations indicated using mounting methods recommended by sign Manufacturer and free from distortion, warp, or defect adversely affecting appearance.

C. Install product level, plumb, and at heights indicated.

D. Kiosk Supports shall be erected as indicated on the Drawings, plumb, level, snug, and free from rocking. Make necessary shimming and final adjustments.
   1. Shims shall be stainless steel sized so that they do not protrude beyond the base of the item so as to be visible in completed installation.

2. Kiosk Supports shall be firmly secured to pavement in accordance with manufacturer's recommendations.

3.03 CLEANING, PROTECTION, AND REPAIR

A. Replace components where repairs were made but are still visible to the unaided eye from a distance of 3 feet.

B. Remove temporary coverings and protection to adjacent work areas. Clean installed products in accordance with Manufacturer's instructions prior to Owner's acceptance. Remove construction debris from project in accordance with provisions in Division 1.

3.04 SIGN SCHEDULE AND DRAWINGS

A. Refer to Drawings for sign locations.

B. City of Quincy shall provide final sign size, layout of panel types, text and graphics.

PART 4 – MEASUREMENT AND PAYMENT

4.1 METHOD OF MEASUREMENT

A. INFORMATIONAL KIOSKS will be measured PER EACH for materials, equipment, labor, and incidentals to provide sign posts, panels, supports, concrete foundation excavation, construction, and reinforcement, copy and graphic rights and releases, and all other incidentals required for furnishing and installing the Informational Kiosks in accordance with this Specification and as shown in the drawings, and as directed by the Owner's representative.

4.2 BASIS OF PAYMENT

A. Payment for INFORMATIONAL KIOSKS will include furnishing and installing all materials complete in place, including but not limited to all incidentals, cleanup, protection, and repair as described in this SECTION and in the Drawings.

B. For the purposes of this Bid, Contractor shall anticipate:
   1. Six (6) sign panels of equal size
   2. Four (4) kiosk supports as indicated on the drawings

4.3 PAYMENT ITEMS

Item INFORMATIONAL KIOSKS PER EACH

END SECTION 101800

INTENTIONALLY BLANK

SECTION 02870 - SITE FURNISHINGS

PART 1 – GENERAL

1.1 GENERAL PROVISIONS

A. Attention is directed to the CONTRACT AND GENERAL CONDITIONS and all Sections within DIVISION 01 - GENERAL REQUIREMENTS which are hereby made a part of this Section of the Specifications.

1.2 DESCRIPTION OF WORK

A. Work Included: Provide labor, materials and equipment necessary to complete the work of this Section, including but not limited to the following:

1. Trash Receptacles.

1.3 SUBMITTALS

A. Product Data: Provide manufacturer's data for each item showing installation and limitations in use.

B. Shop Drawings: Supply shop drawings at an approved scale for location, installation and erection of all parts of the work.

C. Samples: Submit samples showing the complete range of colors, textures and finishes available for all components required for construction. Work includes but is not limited to the following:
1. Provide one sample, 6 in. square, of shop-applied finish for each item.

1.4 QUALITY ASSURANCE

A. Source: For each type of product required for the work of this Section, provide products of one manufacturer and source for consistency.

B. Qualifications of Workers: Use adequate numbers of skilled workers who are trained in the necessary crafts and who are completely familiar with the specified requirements and methods needed for proper performance of the work of this Section.

C. The work of this Section shall be completely coordinated with the work of other Sections. Verify dimensions and work of other trades that adjoin materials of this Section before installing items specified.

D. Protect site furnishings from paint spatter, splashed concrete and other construction damage by wrapping and taping in place plastic sheeting or heavy kraft paper until adjacent work is completed. Repair any damage to finish in a manner consistent with manufacturer's recommendations.

1.5 PROJECT CONDITIONS

A. Protection: The Contractor shall use all means necessary to protect the materials of this Section before, during, and after installation. In the event of damage, make all repairs and replacements necessary to approval of the Owner's Representative and at no additional cost to the Owner. All work shall be executed in such a manner as to prevent any damage to existing streets, curbs, paving to remain, existing plant materials, and adjoining properties.

B. Utilities: Determine location of underground utilities and perform work in a manner which will avoid possible damage. Hand excavate as required. Maintain grade stakes set by others until removal is mutually agreed upon by all parties concerned.

1.6 DELIVERY, STORAGE, AND HANDLING

A. Deliver products and supplies to the job adequately protected from damage during transit.

B. Store products and supplies off the ground and protected against damage. Damaged products and/or supplies will be rejected and shall not be employed in the work.

PART 2 – PRODUCTS

2.1 TRASH RECEPTACLE

A. Contractor shall furnish and install two (2) 36 gallon black outdoor trash receptacles where shown on the drawings.

B. Receptacles shall:
   1. Have outside steel slats, 2-inch wide x 1/4-inch thick
   2. Have leak proof rigid plastic liners included
   3. Have cable secured lid
   4. Have leg levelers for stability on uneven surfaces
   5. Include dome top lid
   6. Be 133 pounds
   7. Be 32-inches tall
   8. Require no assembly

C. Receptacles shall be by:
   Tamis Corporation
   Pittsburgh, PA
   (412) 241-7161
   tamis@tamismail.com
   or approved equal

PART 3 – EXECUTION

3.1 GENERAL

A. Site furnishings shall be erected as indicated on the Drawings, plumb, level, snug, and free from rocking. Make necessary shimming and final adjustments.
   1. Shims shall be stainless steel sized so that they do not protrude beyond the base of the item so as to be visible in completed installation.

3.2 TRASH RECEPTACLE

A. Receptacles shall be located as indicated on the Drawings.

B. Receptacles shall be permanently installed on cement concrete pads per manufacturer's recommendations.

C. Receptacles shall be firmly secured to pavement in accordance with manufacturer's recommendations.

PART 4 – MEASUREMENT AND PAYMENT

4.1 METHOD OF MEASUREMENT

A. SITE FURNISHINGS will be measured PER LUMP SUM for furnishing and installation of materials, equipment, labor, and all other incidentals required to furnish and install trash receptacles in accordance with this Specification and as shown in the drawings, and as directed by the Owner's representative. Payment will not be approved until satisfactory completion of the Maintenance Period.

4.2 BASIS OF PAYMENT

A. Payment for SITE FURNISHINGS will include furnishing and installing all materials complete in place, including but not limited to all incidentals, guarantees and warrantees, as described in this SECTION and in the Drawings.

4.3 PAYMENT ITEMS

Item 12 93 00 SITE FURNISHINGS LUMP SUM

END OF SECTION 129300

INTENTIONALLY BLANK

SECTION 311000 – SITE CLEARING

PART 1 – GENERAL

1.1 RELATED DOCUMENTS

A. Other specification Sections which directly relate to the work of this Section include:

1. Section 311400 – Earth Stripping and Stockpiling
2. Section 312300 – Excavation and Fill
3. Section 312500 – Erosion Control

1.2 SUMMARY

A. This Section specifies requirements for site clearing.

B. The work includes:

1. Clearing and grubbing
2. Protection of existing vegetation to remain
3. Selective clearing and thinning
4. Disposal of material from clearing, grubbing and thinning in approved off-site disposal areas

1.3 SITE CONDITIONS

A. Site conditions existing during the bidding period will be maintained by the Owner insofar as practical.

B. Actual site condition variations that differ from those of the bidding period that affect site preparation operations shall be brought to the attention of the Owner prior to the commencement of any site work.

1.4 ACTION SUBMITTALS

A. The Contractor shall submit the following information to the Engineer for review before commencing any site or demolition work:

1. All permits and notices authorizing site clearing and earthwork
2. Permits for transport and disposal of debris
3. Site clearing procedures and operational sequence
4. Calculations

5. Product Data: For each type of product indicated

PART 2 – PRODUCTS

2.1 TREE PROTECTION FENCING

A. Tree protection fencing shall be orange plastic web fence, 4 feet high minimum. Wood stakes shall be six-foot long by 1 inch by 1 inch square driven a minimum of two feet into the ground. Posts shall be spaced four feet (maximum) on center.

PART 3 – EXECUTION

3.1 CLEARING AND GRUBBING

A. Clearing shall include cutting, removal, and off-site disposal of trees, bushes, shrubs, stumps, fallen timber, refuse, trash, fencing and other incidental materials not required for reuse on the site.

B. The Contractor shall grub the area within the clearing limits to completely remove stumps and root systems, except for those to remain or to be transplanted.

C. Depressions, excavations and voids resulting from the removal of stumps or roots shall be filled with suitable material and compacted as specified under Section 312300 – Excavation and Fill.

3.2 SELECTIVE CLEARING AND THINNING

A. Selective clearing and thinning shall be completed as directed by the Landscape Architect or Arborist. Approximate limits of selective clearing and thinning are shown on the Drawings.

B. The work shall include the removal of dead and diseased tree limbs and plants, and pruning and removal of live vegetation that interferes with the growth of other trees and plants. Areas of dense growth shall be thinned to provide room for healthy growth.

3.3 PROTECTION

A. The Contractor shall flag the limits of clearing shown on the drawings by accurate field survey with marked stakes or other means acceptable to the Engineer. Trees to remain and trees to be saved and transplanted shall be clearly identified during this staking process. The Engineer shall be notified a minimum of five working days prior to scheduled commencement of clearing operations to review the flagged limits. Adjust the clearing limits as directed by the Engineer.

B. Before clearing begins, protect designated trees to remain with tree protection fencing to the approximate diameter of foliage to prevent damage to the trunk, foliage and root system by construction equipment and procedures.

C. Place tree protection fencing as required to protect other plants, adjacent property areas to remain uncleared, monuments and existing improvements from damage.

D. The Contractor shall repair or replace immediately any damage to existing trees or root systems that are to remain and to trees that are to be transplanted. The Contractor shall employ an arborist licensed in the Commonwealth of Massachusetts to determine the repair and replacement needs and methods for approval by the Engineer.

E. Replace damaged shrubs and other vegetation designated to remain with the same size and species.

F. The tree protection fencing shall be maintained for the duration of construction operations. The work shall include immediate replacement of any damaged fence. Fencing shall be removed from the site at the completion of construction operations. The fencing disposal shall be in accordance with local, state and federal laws and regulations for the disposal of the material.

PART 4 – MEASUREMENT AND PAYMENT

4.1 METHOD OF MEASUREMENT

A. Site Clearing as included in this SECTION, acceptably performed and completed including all materials, equipment, labor, and incidentals, required in accordance with this SECTION, as shown in the drawings, and as directed by the Owner's representative shall be considered incidental to the overall project and shall not be measured separately. The work as included in this SECTION shall be considered included in the various Bid Items as indicated in Section 004100, FORM OF GENERAL BID.

B. All work included in this SECTION shall also be subject to relevant provisions of Section 012000 MEASUREMENT AND PAYMENT.

4.2 BASIS OF PAYMENT

A. Site Clearing as included in this SECTION and as shown in the Drawings, including removal and disposal of vegetation, clearing and grubbing and protection of existing trees to remain as described in this SECTION, including all materials, equipment, labor, and incidentals, required in accordance with this SECTION, as shown in the drawings, and as directed by the Owner's representative shall be considered incidental to the overall project and shall be included in the various Bid Items as indicated in Section 004100, FORM OF GENERAL BID and shall be in accordance with Section 012000 MEASUREMENT AND PAYMENT.

4.3 PAYMENT ITEMS

N/A

END SECTION 311000

INTENTIONALLY BLANK

SECTION 311400 EARTH STRIPPING AND STOCKPILING

PART 1 – GENERAL

1.1 DESCRIPTION

A. Provide facilities, labor, materials, tools, equipment, appliances, transportation, supervision, and related work necessary to complete the work specified in this section, and as shown on the Drawings.

B. Work performed under this section of the specifications shall be subject to the General Conditions, Supplementary Conditions and Division 1 General Provisions of the Contract Documents.

C. The work of this section includes but is not necessarily limited to:

1. The removal, hauling and stockpiling of suitable excavated materials for subsequent use in the work. Stockpiling shall include protection to maintain materials in a workable condition.

2. Rehandling, hauling and placing of stockpiled materials for use in refilling, filling, backfilling, grading and such other operations.

3. Protect and preserve all existing buildings, pavements, and utilities to remain.

4. Environmental controls.

5. Obtain all required permits, licenses, and approvals of appropriate municipal and utility authorities, prior to commencing the work of this Section, and pay costs incurred therefrom.

6. Providing products in sufficient quantities to meet the project requirements.

D. Provide facilities, labor, materials, tools, equipment, appliances, and related work necessary to provide and maintain erosion control during construction operations. All erosion control measures shall be installed prior to earthwork operations and shall be maintained according to plans and other sections of the specifications.

E. Contractor shall be responsible for notifying all affected utility companies and Dig Safe before starting work.

1.2 RELATED DOCUMENTS

A. Carefully examine all of the Contract Documents for requirements which affect the work in this section. Other specification sections which directly relate to the work of this section include, but are not limited to, the following:

1. Section 010000 – General Requirements

2. Section 311000 – Site Clearing

3. Section 312300 – Excavation and Fill

4. Section 312313 – Subgrade Preparation

5. Section 312500 – Erosion Control

6. Section 329200 – Sod Lawns

7. Section 329300 – Plants

1.3 LAWS AND REGULATIONS

A. Work shall be accomplished in accordance with regulations of local, county and state agencies and national or utility company standards as they apply.

1.4 QUALITY ASSURANCE

A. The Owner may retain and pay for the services of an independent testing and inspection firm and/or a Geotechnical Consultant to perform on-site observation and testing during the various phases of the construction operations. The scope of services will be determined by the Owner and the independent testing and inspection firm and/or the Geotechnical Consultant and will be provided to the contractor. The Owner reserves the right to modify or waive the services of the independent testing and inspection firm and/or the Geotechnical Consultant. The services of a Geotechnical Consultant/Inspection and testing firm may include, but not necessarily be limited to, the following:

1. Observation during excavation and dewatering of building and controlled fill areas.

2. Laboratory testing and analysis of fill materials as specified herein and proposed by the Contractor for incorporation into the Work.

3. Observation of construction and performance of water content, gradation and compaction tests at a frequency and locations that he shall select. The results of these tests will be submitted to the Owner, Engineer, and Contractor on a timely basis so that action can be taken to remedy indicated deficiencies. During the course of construction, the Geotechnical Consultant will advise the Owner in writing if at any time in his opinion the Work hereunder is of unacceptable quality. Failure of Geotechnical Consultant to give notice, shall not excuse the Contractor from latent defects discovered in his work.

B. The Contractor shall make provisions for allowing observations and testing of Contractor's Work by the independent testing and inspection firm and/or the Geotechnical Consultant.

The presence of the independent testing and inspection firm and/or the Geotechnical Consultant does not include supervision or direction of the actual work of the Contractor, his employees or agents. Neither the presence of the independent testing and inspection firm and /or the Geotechnical Consultant, nor any observations and testing performed by them, nor failure to give notice of defects shall excuse the Contractor from defects discovered in his work.

C. Costs related to retesting due to unacceptable qualities of work and failures discovered by testing shall be paid for by the Contractor at no additional expense to Owner, and the costs thereof will be deducted by the Owner from the Contract Sum.

D. Whenever floodplain compensation areas are designated on the plans, grading elevations are to be considered critical to the floodplain volumetric calculations and shall be constructed by the Contractor in strict conformance with the indicated grades.

1.5 SUBMITTALS

A. For use of fabrics or geogrids, submit manufacturer's literature for approval by the Engineer.

1.6 COORDINATION

A. Prior to start of earthwork the Contractor shall arrange an on-site meeting with the Engineer, the independent testing firm, and the Geotechnical Consultant for the purpose of establishing the Contractor's schedule of operations and scheduling observation and testing procedures and requirements.

B. As construction proceeds, the Contractor shall be responsible for notifying the Engineer prior to the start of earthwork operations requiring observation and/or testing.

PART 2 - PRODUCTS

2.1 MATERIALS

A. Filter Fabric/Geotextiles

1. Geotextile Fabric shall be used to prevent soil intrusion into drains and/or assist in stabilizing soil subgrades to be laid on approved soil subgrades prior to placement of fill materials.

a) Contractor shall use TenCate Mirafi® 140N or equivalent filter fabric in drainage recharge systems, underdrain systems between crushed stone and granular soils, leaching areas or where indicated on the plans.

2.2 USE OF MATERIALS

Use of materials shall be as described below and as shown on the plans. Further details can be found in the project plans. Combinations or layering of materials may be necessary in certain instances such as for detention embankments, subsurface disposal areas, and riprap walls as examples.

A. Filter Fabric/Geotextiles: To be used as filter barriers between drainage recharge systems, underdrain systems, wastewater absorption systems, and between natural earth material and backfill or other materials to assist in stabilizing soil subgrades.

PART 3 EXECUTION

3.1 CLEARING AND GRUBBING

A. Cut and remove trees, remove stumps and brush. Legally dispose of off-site. Woodwastes may be chipped and shredded on-site and reused on-site with permission of the Engineer.

B. Strip all topsoil, subsoil and other unsuitables to its full depth within the Contract limits. In building areas, limits of excavation are defined in Section 3.03 B.

C. Under pavement areas, unsuitable materials shall be removed and disposed of by the Contractor in an Approved location, or if no Approved location exists on site to an Approved off site location and replaced with structural fill. Treatment of existing fill and removal of topsoil, subsoil and stumps are defined in Section 3.03 B.8. These materials shall be processed to remove all roots, stones larger than 3/4 inch in diameter and other deleterious materials. Stockpile as approved by the Engineer. Protect the topsoil from contamination by other materials.

D. Other Specification sections shall apply to clearing and grubbing under demolition and shall include air quality, erosion control and hazardous waste.

E. Remove all topsoil, subsoil, vegetative matter, and non-soil materials and, after screening out the roots, rocks greater than ¾ inch in size, and deleterious debris, separately stockpile the topsoil and subsoil materials.

PART 4 – MEASUREMENT AND PAYMENT

4.1 METHOD OF MEASUREMENT

A. Earth Stripping and Stockpiling generally including, but not limited to, the removal, hauling and stockpiling of suitable excavated materials for subsequent use in the work, acceptably performed and completed including all materials, equipment, labor, and incidentals, in accordance with this SECTION, as shown in the drawings, and as directed by the Owner's representative shall be measured PER LUMP SUM as indicated in Section 004100, FORM OF GENERAL BID.

4.2 BASIS OF PAYMENT

A. Earth Stripping and Stockpiling will generally include but is not limited to the removal, hauling and stockpiling of suitable excavated materials for subsequent use in the work as described in this SECTION and in the Drawings, including all materials, equipment, labor, and incidentals, required in accordance with this SECTION, as shown in the drawings, and as directed by the Owner's representative shall be paid PER LUMP SUM as indicated in Section 004100, FORM OF GENERAL BID and shall be in accordance with Section 012000 MEASUREMENT AND PAYMENT.

4.3 PAYMENT ITEMS

Item 31 14 00 EARTH STRIPPING AND STOCKPILING LUMP SUM

END SECTION 311400

SECTION 312300 EXCAVATION AND FILL

PART 1 – GENERAL

1.1 DESCRIPTION

A. Provide facilities, labor, materials, tools, equipment, appliances, transportation, supervision, and related work necessary to complete the work specified in this section, and as shown on the Drawings.

B. Work performed under this section of the specifications shall be subject to the General Conditions, Supplementary Conditions and Division 1 General Provisions of the Contract Documents.

C. The work of this section includes but is not necessarily limited to:

1. Excavation, fill, and backfill, as indicated or required, including compaction.

2. Excavation, as required, to the lines and grades indicated on the Drawings.

3. Excavation and offsite disposal of unsuitable or excess materials unless on-site locations are designated. Excavation shall include removal and satisfactory disposal of all unclassified material encountered throughout the site.

4. Rough grading, including placement, moisture conditioning and compaction of fills and backfill.

5. Placement of base and subbase course materials under structures, pavements, slabs and footings, including compaction.

6. Trench excavation, bedding and backfill for structures, foundations, and utilities, including compaction.

7. Furnishing and installing all sheeting, shoring, and bracing of structural and trench excavations and its satisfactory removal, unless otherwise directed to have it remain in place.

8. Protect and preserve all existing buildings, pavements, and utilities to remain.

9. Environmental controls.

10. Obtain all required permits, licenses, and approvals of appropriate municipal and utility authorities, prior to commencing the work of this Section, and pay costs incurred therefrom.

11. Providing adequate pumping and drainage facilities to keep the work area sufficiently dry.

12. Providing products in sufficient quantities to meet the project requirements.

D. Provide facilities, labor, materials, tools, equipment, appliances, and related work necessary to provide and maintain erosion control during construction operations. All erosion control measures shall be installed prior to earthwork operations and shall be maintained according to plans and other sections of the specifications.

E. Contractor shall be responsible for notifying all affected utility companies and Dig Safe before starting work.

1.2 RELATED DOCUMENTS

A. Carefully examine all of the Contract Documents for requirements which affect the work in this section. Other specification sections which directly relate to the work of this section include, but are not limited to, the following:

1. Section 010000 – General Requirements
2. Section 311000 – Site Clearing
3. Section 311400 – Earth Stripping And Stockpiling
4. Section 312300 – Excavation and Fill
5. Section 312313 – Subgrade Preparation
6. Section 312500 – Erosion Control
7. Section 321313 – Concrete Paving
8. Section 329200 – Sod Lawns
9. Section 329300 – Plants

1.3 LAWS AND REGULATIONS

A. Work shall be accomplished in accordance with regulations of local, county and state agencies and national or utility company standards as they apply.

1.4 QUALITY ASSURANCE

A. The Owner may retain and pay for the services of an independent testing and inspection firm and/or a Geotechnical Consultant to perform on-site observation and testing during the various phases of the construction operations. The scope of services will be determined by the Owner and the independent testing and inspection firm and/or the Geotechnical Consultant and will be provided to the contractor. The Owner reserves the right to modify or waive the services of the independent testing and inspection firm and/or the Geotechnical Consultant. The services of a Geotechnical Consultant/Inspection and testing firm may include, but not necessarily be limited to, the following:

1. Observation during excavation and dewatering of building and controlled fill areas.
2. Laboratory testing and analysis of fill materials as specified herein and proposed by the Contractor for incorporation into the Work.

3. Observation of construction and performance of water content, gradation and compaction tests at a frequency and locations that he shall select. The results of these tests will be submitted to the Owner, Engineer, and Contractor on a timely basis so that action can be taken to remedy indicated deficiencies. During the course of construction, the Geotechnical Consultant will advise the Owner in writing if at any time in his opinion the Work hereunder is of unacceptable quality. Failure of Geotechnical Consultant to give notice, shall not excuse the Contractor from latent defects discovered in his work.

B. The Contractor shall make provisions for allowing observations and testing of Contractor's Work by the independent testing and inspection firm and/or the Geotechnical Consultant.

The presence of the independent testing and inspection firm and/or the Geotechnical Consultant does not include supervision or direction of the actual work of the Contractor, his employees or agents. Neither the presence of the independent testing and inspection firm and /or the Geotechnical Consultant, nor any observations and testing performed by them, nor failure to give notice of defects shall excuse the Contractor from defects discovered in his work.

C. Costs related to retesting due to unacceptable qualities of work and failures discovered by testing shall be paid for by the Contractor at no additional expense to Owner, and the costs thereof will be deducted by the Owner from the Contract Sum.

D. Whenever floodplain compensation areas are designated on the plans, grading elevations are to be considered critical to the floodplain volumetric calculations and shall be constructed by the Contractor in strict conformance with the indicated grades.

1.5 SUBMITTALS

A. Submit, in an airtight container for the testing laboratory, a 50-pound sample of each type of off-site fill material that is to be used at the site. Submit samples a minimum of one week prior to use of proposed material at the site. Submit samples to the testing laboratory and the Geotechnical Consultant (copy of these transmittal forms shall be sent to Engineer) or if no testing and/or Geotechnical Consultant is identified then the Engineer shall be the recipient of the samples. Use of these proposed materials by the Contractor prior to testing and approval shall be at the Contractor's risk.

B. The Engineer will be responsible for the approval or rejection of the suitability of all materials.

C. Submit the name of each material supplier and specific type and source of each material. Any change in source throughout the job requires approval of the Owner or Engineer.

D. For use of fabrics or geogrids, submit manufacturer's literature for approval by the Engineer.

1.6 COORDINATION

A. Prior to start of earthwork the Contractor shall arrange an on-site meeting with the Engineer, the independent testing firm, and the Landscape Architect for the purpose of establishing the Contractor's schedule of operations and scheduling observation and testing procedures and requirements.

B. As construction proceeds, the Contractor shall be responsible for notifying the Engineer prior to the start of earthwork operations requiring observation and/or testing.

C. If the requirements cannot be met with information provided in these specifications or they differ from other sections, notify the Owner's representative immediately for direction.

PART 2 – PRODUCTS

2.1 MATERIALS

A. Subgrade is the material in excavation (cuts) and fills located below: subbase, base course layer for slabs, sidewalks, pavement, and other improvements.

B. Common Fill/Ordinary Borrow shall be friable soil containing no stone greater than two-thirds (2/3) the loose lift thickness with a maximum stone size of twelve (12) inches in diameter. The material shall be essentially free of trash, ice snow, tree stumps, roots, and organic materials. The soil shall contain no more than 15 percent passing the #200 sieve.

C. Gravel shall consist of inert material that is hard, durable stone and coarse sand, free from loam, clay, surface coatings and deleterious materials, and shall conform to the following gradation:

Sieve (ASTM D422)	Percent Passing
*	100
1/2-inch	50-85
No. 4	40-75
No. 10	30-60
No. 40	10-35
No. 100	5-20
No. 200	2-10

*Four inches (4") where placed as base below slab and pavement; One and one half inches (1 ½") where placed as pipe bedding and backfill up to 24 inches above pipe; and elsewhere two thirds (2/3) the loose lift thickness.

D. Sand shall consist of clean, inert, hard, durable grains of quartz or other hard, durable rock, free from loam or clay, surface coatings and deleterious materials conforming to ASTM C33. Do not use mason sand or stone dust.

The allowable amount of material passing a No. 200 sieve as determined by AASHTO-T11 or ASTM D: 422 shall not exceed 10 percent by weight. The maximum particle size shall be 1/4-inch (i.e., 100 percent passing the No. 4 sieve).

In addition to the above criteria when sand is used for bedding concrete pavers and for utility bedding it shall conform to the following gradation.

Sieve (ASTM D422)	Percent Passing by Weight
No. 4	100
No. 8	80 – 95
No. 16	55 – 85
No. 50	0 – 35
No. 200	0 – 5

E. Crushed Stone shall be composed of durable crushed rock consisting of angular fragments, free from a detrimental quantity of thin, flat, elongated pieces or shall be durable crushed gravel stone obtained by artificial crushing of gravel boulders or fieldstone.

The crushed stone shall be free from cay, loam or deleterious material.

Crushed Stone shall conform to the following gradations:

	Percent Passing By Weight	
Sieve Size	1/2-Inch Stone	3/4-Inch Stone
1 inch	---	100
3/4 inch	---	90-100
5/8 inch	100	---
1/2 inch	85-100	10-50
3/8 inch	15-45	0-20
No. 4	---	0-5
No. 8	0-5	---

	Percent Passing By Weight	
Sieve Size	1-1/2-Inch Stone	2-Inch Stone
2 inch	100	90-100
1-1/2 inch	95-100	---
1-1/4 inch	---	25-50
1 inch	35-70	---
3/4 inch	0-25	0-15
1/2 inch	---	---

F. Dense-graded Crushed Stone for subbase and base
Dense-graded Crushed Stone shall conform to the following gradation:

Sieve Size	Percent Passing By Weight 2-Inch Stone
2 inch	100
1-1/2 inch	70-100
3/4 inch	50-85
No. 4	30-55
No. 50	8-24
No. 200	3-10

G. Washed 2-Inch Crushed Stone for Stormwater Recharge shall be composed of durable crushed rock consisting of angular fragments, free from a detrimental quantity of thin, flat, elongated pieces or shall be durable crushed gravel stone obtained by artificial crushing of gravel boulders or fieldstone. The crushed stone shall be free from clay, loam or deleterious material.

Washed Crushed Stone for Stormwater Recharge shall conform to the following gradation:

Sieve Size	Percent Passing By Weight 2-Inch Stone	 1-1/2 Inch Stone
2 inch	90 – 100	100
1-1/2 inch	---	95 – 100
1-1/4 inch	25-50	45 – 80
1-inch	----	35 – 70
¾ -inch	0-15	0 – 25
½ -inch	0-5	0 – 5
No.4		0

H. Double-Washed Crushed Stone for Wastewater Soil Absorption Systems shall be composed of durable crushed rock consisting of angular fragments, free from a detrimental quantity of thin, flat, elongated pieces, or shall be durable crushed gravel stone obtained by artificial crushing of gravel boulders or fieldstone. The crushed stone shall be free from clay, loam or deleterious material.

Double-Washed Crushed Stone for Wastewater Soil Absorption Systems shall conform to the following gradation:

	Percent Passing By Weight

Sieve Size	1-1/2-Inch Stone	1/2 Inch Stone
2 inch	100	--
1-1/2 inch	95-100	--
1-1/4 inch	45-80	--
1-inch	35-70	--
¾ -inch	0-25	--
½ -inch	0-5	100
No. 3.8-inch	0	85 – 100
No. 4		15 – 45
No. 8		0 – 5
No. 40		0

I. Structural Fill shall be free from ice and snow, roots, sod, rubbish and other deleterious or organic matter. Structural fill shall conform to the following gradation requirements:

Sieve Size	Percent Passing By Weight
*	100
No. 4	30-95
No. 40	10-70
No. 200	0-15

* Two thirds (2/3) of the loose lift thickness.

J. Blast Rock Fill shall be well-graded blasted rock formed and processed when on-site rock is removed by blasting or chipping methods, with a maximum size hereinafter specified. Well-graded means that at least twenty-five percent (25%) is less than six inches (6") in size, and at least ten percent (10%) is less than three-quarters inch (3/4") in size. The Contractor shall vary drilling and blasting procedures as needed and/or select materials sources in order to meet these gradation requirements.

Blast rock fill may be placed to within forty-two (42") of finish grade in pavement and building floor slab areas and to within eighteen inches (18") of inverts or utility lines and bottom of foundations. The first lift over the top of rock fill shall be a choke stone layer eighteen inches (18") thick which shall be a well-graded mixture with a maximum stone size less than nine inches (9"). Compaction shall be by minimum of four (4) coverages of a self-propelled vibratory drum roller in each direction (i.e., north-south and east-west). The minimum weight of the drum shall be ten thousand pounds (10,000 lbs.).

Rock shall not be placed within a five foot (5') horizontal distance on either side of any proposed utility line. The intent is to leave a zone of Structural Fill that can later be excavated for installation of utilities. Also, large rock fragments should be kept away from the utility pipes.

K. Choke Stone shall be hard, durable, clean, rock with a maximum rock diameter of 9 inches and shall conform to the following gradation requirements:

Sieve Size	Percent Passing By Weight
9 inches	100
6 inches	75-100
2 inches	70-85
¾ inches	45-60
No. 4	15-30
No. 40	5-15
No. 200	0-10

L. Stone Fill shall be hard, durable, clean, washed rock with a minimum diameter of 1-1/2 inches and a maximum diameter of 3 inches with void ratio of 30 to 40 percent.

M. Filter Fabric/Geotextiles

1. Geotextile Fabric shall be used to prevent soil intrusion into drains and/or assist in stabilizing soil subgrades to be laid on approved soil subgrades prior to placement of fill materials.

   a) Contractor shall use TenCate Mirafi® 140N or equivalent filter fabric in drainage recharge systems, underdrain systems between crushed stone and granular soils, leaching areas or where indicated on the plans.

N. Controlled Low Strength Material or Controlled Density Fill: Controlled low strength material or controlled density fill shall be a cement concrete backfill material that flows like a liquid, supports like a solid when cured, and levels without tamping or vibrating to reach 100 percent compaction. The material shall be used primarily as a backfill in lieu of compacted fill. The material shall be proportioned to yield a 28—day minimum compressive strength of 200 pounds per square inch. The material shall be produced and installed in accordance with ACI 229R, and ACI 116R, with a mix formulation to be approved prior to placement of the material in the project.

O. Topsoil/Loam

1. Topsoil/Loam shall be provided as specified under Section 3292000 – Sod Lawns.

2.2 USE OF MATERIALS

Use of materials shall be as described below and as shown on the plans. Further details can be found in the project plans. Combinations or layering of materials may be necessary in certain instances such as for detention embankments, subsurface disposal areas, and riprap walls as examples.

A. Common/Ordinary Fill: Use common/ordinary fill for general grading, as backfill, embankment fill in areas outside the building and pavement limits. Stones larger than twelve inches (12") shall be removed prior to compaction.

B. Gravel: Use for pipe bedding backfill and backfill below pavement and slab as base course layer. Use for material placed "in the wet". Use for backfill behind retaining walls and retaining structures. Use for pipe and utility bedding.

C. Sand: Use for conduit bedding and initial backfill, and gas line bedding and backfill. Use for bedding and backfill of direct burial cables and/or flexible piping. Use for bedding and filling joints for concrete unit pavers.

D. Sand Fill Material: Fill or replacement material for On-Site disposal system leaching areas, and for wastewater disposal systems.

E. Crushed Stone: Use crushed stone as a filter material around perforated pipe, as bedding for piping under wet subgrade conditions.

F. Dense-Graded Crushed Stone: Use dense-graded crushed stone for sub-base and base material.

G. Washed Crushed Stone: Use washed crushed stone in stormwater recharge system as the material around perforated pipe

H. Double Washed 1-1/2 Inch Crushed Stone: Use double washed 1-1/2 inch crushed stone in soil absorption facilities for wastewater disposal systems, recharge filters and as a filter material around perforated pipe.

I. Double Washed 1/2 Inch Crushed Stone: Use double washed 1/2 inch crushed stone in soil absorption facilities for wastewater disposal systems, recharge filters and as a filter material around perforated pipe.

J. Structural Fill: Use structural fill below subgrade elevation in building areas such as beneath floor slabs, foundations, and in other soil bearing situations. Structural fill shall also be used for backfill against building foundations and frost walls. Use structural fills below pavement gravel base course.

K. Blast Rock Fill and Choke Stone: Refer to Section 2.01 for definition and use.

L. Stone Fill: Use stone fill as additional storage medium for underground stormwater exfiltration trenches or pits.

M. Filter Fabric/Geotextiles: To be used as filter barriers between drainage recharge systems, underdrain systems, wastewater absorption systems, and between natural earth material and backfill or other materials to assist in stabilizing soil subgrades.

N. Filter Layer: Use filter stone layer under riprap, stone for pipe ends, slope paving, channel paving and grouted channel paving or where indicated.

O. Controlled Low Strength Material or Controlled Density Fill: Shall be used for trench backfill, anti-floatation bases, and/or lightweight backfill.

P. Topsoil/Loam: Use as fill in designated landscape and lawn areas, if off-site material is required Loam shall be furnished and installed. Topsoil maybe used as fill in landscape and lawn areas, if an excess of topsoil exists on-site.

PART 3 EXECUTION

3.1 DEWATERING

A. Provide, operate and maintain site and subsurface drainage and dewatering in an acceptable manner as required to complete the work throughout the course of the project.

B. Remove, by pumping or other means, water accumulated in excavations and within two (2) feet below subgrade until earthwork, utilities, concrete, and other work operations are complete. Dewatering shall be considered incidental to the defined work items and costs for performing same shall be included in the bid price(s) and no separate payment shall be made to the Contractor for dewatering operations.

C. Provide, maintain, and operate wells, pumps and related equipment, including stand-by equipment, of sufficient capacity to maintain excavations and trenches free of water 24 hours per day to enable all work to be conducted in-the-dry and to protect bearing surfaces from disturbance.

D. Water from excavations shall be disposed of in such manner as will not cause injury to public health, public and private property, existing work, work to be completed or in progress, roads, walks, and streets, or cause any interference with use of same by public. Concrete or fill shall not be placed in excavations containing free water.

E. Construction may require excavation below water level in soil. The Contractor shall complete this work in-the-dry to maintain the undisturbed condition of the bearing soil.

F. Maintain groundwater at least 12 inches below lowest exposed subgrade level. If the dewatering methods have not been adequate and the bearing soils are disturbed, remove disturbed soil and replace with compacted Structural Fill or lean concrete at no additional cost to the Owner.

G. Sumps shall be surrounded by suitable filter media to minimize the fines removed during pumping.

H. Pumped groundwater and surface water runoff shall be initially pumped to a settling basin to remove suspended solids prior to discharge. The Contractor shall furnish all treatment systems that are necessary for pretreatment of groundwater prior to discharge in accordance with all applicable permits and regulations.

I. Discharge of pumped water, either surface water runoff or groundwater, shall be in compliance with discharge criteria contained in permits issued by governing agencies, and all legal requirements and regulations. All permits shall be obtained by the Contractor.

3.2 EXCAVATIONS

A. General Definitions

1. Unclassified Materials – Unclassified excavation includes the satisfactory removal and disposal of all materials (except contaminated materials defined below)encountered regardless of the nature of the materials and shall be understood to include, but not be limited to, blastrock, bedrock, earth, hardpan, fill, foundations, pavements, curbs, piping, railroad track and ties, cobblestones, footings, bricks, concrete, abandoned drainage and utility structures, and debris. Drilling, blasting, excavation and disposal of rock shall be considered unclassified excavation and shall be included as a part of the contract price, with no separate payment items for its excavation and handling.

2. Contaminated Materials

a) The Contractor shall be familiar with the State Department of Environmental Protection (DEP) Hazardous Waste Regulations 310 CMR 30.00 and the Massachusetts Contingency Plan (MCP) 310 CMP 40.00 when conducting earthwork operations.

b) In general, a hazardous waste (contaminated with oil or hazardous materials) is a waste or combination of wastes which, because of its quantity, concentration, physical, chemical or infectious characteristics, may cause, or significantly contribute to, an increase in mortality or an increase in serious irreversible or incapacitating reversible illness or pose a substantial present or potential hazard to human health, safety, or welfare, or to the environment when improperly stored, treated, transported, or disposed of, or otherwise managed. (Additional criteria and characteristics to determine if a waste is hazardous are contained in 310 CMR 30.111, 30.112 and 30.120 through 30.125).

c) The Contractor shall immediately halt soil movement activities and notify the Owner if visual, olfactory or other evidence suggests that soils may be contaminated with oil or hazardous materials. Contractor shall provide reasonable assistance to Owner and to Owner's representative for access to potential contamination areas for proper assessment of hazardous conditions.

d) The Owner shall contact an environmental professional (such as a Licensed Site Professional) to test any earth materials suspected of containing hazardous waste. The results shall be evaluated by the environmental professional and compared with reporting thresholds found in the Massachusetts Contingency Plan (MCP) 310 CMR 40.0000. The Owner shall inform the Contractor of the laboratory test results as soon as possible and discuss the possible soil management, disposal, recycling options available. Contaminated soils shall be managed and handled in compliance with the referenced state/federal regulations, guidelines and policies. Time and expenses associated with contaminated soils shall be negotiated between the Contractor and the Owner prior to the start of the soil management, disposal, recycling work. Owner reserves the right to negotiate and contract with other entities for remedial and, in that event, this Contractor shall make reasonable accommodations for other entities to perform this work.

e) Although there is no evidence of oil or hazardous material, there is a possibility of the presence of such wastes on this site. Appropriate testing, as recommended by an environmental professional, shall be accomplished to assess

the potential presence of oil or hazardous material. Earth material shall not be removed from the site unless on-site reuse is not possible.

f) Proper documentation of legal disposal of hazardous materials handled by this Contractor shall be provided by the Contractor to the Owner, Engineer, and review authorities. Additional guidance for possible disposal activities can be found in the Department of Environmental Protection's Policy #COMM-97-001, Reuse and Disposal of Contaminated Soil at Massachusetts Landfills.

g) Unless specifically identified as contaminated material under referenced statues and as defined above, as judged by the engineer, excavated materials shall be considered unclassified as defined in item 1. above.

B. Site General Requirements

1. Control the grading so that ground is pitched to prevent water from running to excavated areas, damaging other structures, or adjacent properties.

2. Where soil has been softened or eroded by flooding, equipment, traffic, or placement during unfavorable weather, or such other conditions, it shall be removed and replaced by the Contractor with suitable material, and at no cost to the Owner.

3. Exercise care to preserve the material below and beyond the lines of excavation. Where excavation is carried out below indicated grade or beyond the lines of excavation, Contractor shall backfill and compact the over excavation with structural fill to the indicated grade, at no additional cost to the Owner and at the direction of the Engineer.

4. Provide sheeting, shoring and bracing to complete and protect all excavated areas, as required for safety and compliance with OSHA. Costs for sheeting, shoring, and bracing shall be included as a part of the contract price for completing the work and Owner shall make no separate payment for this work.

5. Excavated materials unsuitable for reuse, surplus excavated rock and surplus excavated soil not used to fulfill requirements of the Contract, shall become the property of the Contractor and shall be removed from the site in accordance with the regulations and requirements of all municipalities or agencies having jurisdiction over the disposal sites and the route between the project and the disposal sites.

6. Limits of excavation are such that all unsuitable material will be removed to firm natural ground in the manner specified below. In building areas, unsuitable materials shall be removed to a distance of five feet (5') beyond the building lines or within the area defined by a one horizontal to one vertical (1h:1v) line sloping down from outside bottom edge of exterior footings to firm natural ground, whichever is greater. Limits of unsuitable material excavation also apply to areas below exterior column footings. All abandoned pipes within building areas are to be removed and the excavations are to be properly backfilled.

7. Unsuitable materials are classified as organics such as peat, trash, fill, stumps, debris, material determined to be hazardous, and topsoil and subsoil when determined by Engineer to be unacceptable for incorporation into the work.

8. Under pavement areas, existing fill will be densified in place and will not be excavated. Topsoil need not be excavated from pavement areas if located more than three feet (3') below finish pavement grades. Trees are to be cut flush with ground and stumps shall be left in place if the existing ground surface is located more than six feet (6') below finish grades. Abandoned pipes, that are buried more than four feet (4') from finish grade to the top of the pipe and that due not interfere with utilities to remain or to be installed, shall be capped and/or grouted at both ends and left in place. Abandoned pipes less than four feet from finish grade shall be removed and the trench appropriately backfilled with structural fill.

9. All suitable material, as determined by the Engineer, may be reused on the site, provided it meets the gradation requirements for the given materials in the information of fill sections, embankments, subgrades, backfills, etc.

10. Do not over excavate below proposed design grades for the purpose of obtaining borrow for use off-site.

C. Proof-rolling

1. Prior to placing compacted fills, the Contractor shall proof roll the natural grades to remain. Where materials of low density are indicated by rutting or weaving under the compactor, the Contractor may be required to make up to three (3) additional complete coverages of the area with the compactor as determined by the Engineer. The cost of all proof rolling shall be included in the Contract Sum. If materials of low density are encountered that cannot be compacted to the extent necessary to support the proposed embankment fills as determined by the Engineer, the Contractor shall remove those materials and replace them with compacted fill.

2. Alternately, an initial layer of fill may be allowed to form a working platform. The need, manner of construction, and thickness of such a layer shall be subject to approval of the Engineer and the layer will be permitted only where the lack of support is, as determined by the Engineer, not due to deficient ditching, grading or drainage practices, or where the embankment could be constructed in the approved manner by the use of different equipment or procedures. Thickness of up to eighteen (18) inches may be permitted for such a layer.

3.3 TRENCH EXCAVATION

A. Excavate as necessary for all drainage pipes, utilities and related structures and appurtenances, and for any other trenching necessary to complete the work.

B. Definitions:

1. Trench shall be defined as an excavation of any length where the width is less than twice the depth and where the shortest distance between payment lines does not exceed ten (10') feet. All other excavations shall be defined as open excavations.

2. The words "invert" or "invert elevation" as used herein shall be defined as the elevation at the inside bottom surface of the pipe or channel.

3. The words "bottom of the pipe" as used herein shall be defined as the base of the pipe at its outer surface.

C. In general, machine excavation of trenches will be permitted with the exception of preparation of pipe beds which will be hand work. Excavate by hand or machine methods to at least six (6") inches below the bottom of pipe or as shown on the Drawings. Excavation to final grade shall be made in such a manner as to maintain the undisturbed bearing character of the soils exposed at the excavation level.

D. Utilities or piping shall not be laid directly on boulders, cobbles or other hard material. This material shall be removed to a minimum of six inches below the bottom of pipe at all points and backfilled or compacted as specified.

E. Remove unsuitable material encountered at subgrade elevations, backfill with material specified herein and as otherwise indicated on the Drawings, specified or directed. Compact as specified with approved compactors.

F. In general, the width of trenches shall be kept to a minimum and in the case of piping shall not exceed the sum of the pipe's outside diameter plus 2'0" to at least twelve (12") inches above the pipe.

3.4 ROCK EXCAVATIONS

C. Definitions

1. Rock is defined for payment purposes as stone or hard shale in original ledge, boulders over two cubic yards (2 yd^3) in volume in open areas, and one cubic yard (1 yd^3) in volume in trenches, and masonry or concrete that cannot be broken or removed by normal job equipment (power shovels, scoops, or D-8 bulldozers with ripper attachment) without the use of explosives or drills.

2. The definition does not include materials that can be removed by means other than drilling and blasting or drilling and wedging.

B. General

1. When rock is encountered, such material shall be removed to the clearance limits set forth in these specifications.

2. Payment for rock excavation shall be made in accordance with ITEM 3.03 A.1.

3. Rock Excavation shall be performed to eliminate water pockets in the excavated rock subgrade. Contractor shall provide dewatering as required to keep the excavated rock subgrade dry until earthwork operations are complete.

C. Blasting

1. Contractor shall, before doing any blasting work, present to the Owner's Representative written certificate of insurance showing evidence that his insurance includes coverage for blasting operations.

2. No blasting shall be done without giving 24 hour prior notice to the Engineer. Written permission and approval of methods must be obtained from appropriate governing authorities.

3. The Driller and Geotechnical Engineer shall log the bottom elevation of all drill holes made for blasting within the building area.

4. Experienced powdermen or persons who are licensed or otherwise authorized to use explosives shall do blasting. Accurate records shall be maintained, noting location of each blast, time of detonation, total explosive weight in each blast, maximum explosive weight per delay in each blast hole, and designation of delay cap used in each hole.

5. Explosives shall be stored, handled, and employed in accordance with state and local regulations, or, in the absence of such, in accordance with the provisions of the Manual of Accident Prevention in Construction of the Associated General Contractors of America, Inc. and in accordance with applicable OSHA regulations.

6. The amount of vibration and airblast overpressure generated by blasting shall not exceed regulatory statutes or directives established by state, local or other governing authorities. In no case shall the maximum Peak Particle Velocity (PPV) exceed the limits indicated on figure B-1, Appendix B, of the United State Bureau of Mines Report of Investigations, RI8507, 1980. These limits shall apply at all existing and under construction structures, and utilities, as well as at property and construction limits.

7. Contractor shall take great care to do no damage to existing buildings, foundations, glass and glazing, and trees to remain. Damage caused by Contractor's blasting operations shall be repaired by Contractor at no additional cost to the Owner

D. <u>Cross Sectioning and Measurement</u>

1. When rock is encountered, it shall be uncovered and exposed, and the Engineer shall be notified in writing by the Contractor before blasting work proceeds. Quantities shall be based on measurements in their original position and to the limits of clearly defined vertical and horizontal construction lines required for the defined construction.

2. The rock shall then be measured, quantities established, and payment amounts shall be determined.

3. Excavation of material in question before agreement by the Engineer as to the character of the material, or failure to notify the Engineer, or failure to take measurements will forfeit the Contractor's right to payment for rock excavation.

4. The quantity of rock to be removed shall be based on the limits established under the Clearance Limits below.

5. Measurements shall be made by a Registered Surveyor, paid for by the Contractor and approved by the Engineer.

6. Cross section and measuring shall not be required when the payment for rock excavation is included as a part of the lump sum contract price as defined in item 3.03 A.1.

E. Clearance Limits

1. Foundations and Slabs: Within the limits of the concrete lines as defined by the working plans or by duly authorized modifications thereto, plus twelve inches (12") outside the vertical concrete lines and twelve inches (12") below base.

2. Utility Trenches: All parts of pipe, valves and fittings to a depth of six inches (6") below the bottom of the bell and for a width equal to the outside diameter of the pipe, plus fifteen inches (15") beyond the outside diameter on each side, provided that overlapping computed volumes of any ledge or boulder excavation shall be paid for only once.

3. Paved Areas: To the underside of the respective subbase for such areas.

4. Site Structures: Twelve inches (12”) outside of structure all around.

5. Lawn areas and shrub planting areas: To a depth of eighteen (18) inches below finished grade.

6. Planting areas for trees over two inches in caliber size: To depth of thirty-six (36) inches below finished grade and for a radius of 3 feet around each tree, except volumes in radius areas shall not overlap.

7. Any foreseen rock or boulder encountered, as defined above, which must be removed for construction of the work defined on the plans or in modification thereto, shall be measured in its original position to the limits of clearly defined vertical construction lines and to the depth required for the defined construction.

F. Reuse of Excavated Rock

1. Riprap

   Excavated rock may be used as riprap, for construction of stone masonry walls and for sloped riprap for retaining walls, provided rock is judged to be adequate quality by the Owner’s representative and it is sufficiently broken to meet gradation requirements established for the intended use.

2. Fills

   Reuse of excavated rock for fill materials shall require prior approval of the Owner’s representative and shall require compliance with gradation requirements for the specific type of fill for which it is being used.

G. Rock Subgrades under Building Footings and Paved Areas

1. Excavation of rock under footings and paved areas shall include the removal of all loose material to the top of sound bedrock that is acceptable to the Owner's Representative. Sound bedrock is defined as hard, intact rock that cannot be excavated with a track mounted excavator, such as a Caterpillar 320L.

2. Rock surface for footings shall have a maximum slope of 4 horizontal to 1 vertical.

3. Rock excavations for footings carried below design grades shall be backfilled by placement of concrete with same strength as footing at the Contractors cost. At the discretion of the structural engineer, footings could be dropped below design elevation onto competent rock.

3.5 PREPARATION OF EXCAVATION BOTTOMS

A. General Rock Subgrade Areas

1. Rock surfaces to receive backfill shall have a maximum slope of four (4) horizontal to one (1) vertical.

2. Rock excavations carried below design grade and clearances shall be backfilled with lean concrete with a minimum compressive strength of 1500 psi.

B. Building and Pavement Areas

1. Loose rock is covered with 6 inches of crushed stone or choke stone; and

2. Prior to placing crushed or choked stone, the area is rolled with at least four passes of a heavy vibratory roller, RayGo 600 or equal.

3. Proofroll subgrade with a vibratory roller or by minimum of two passes of a fully loaded ten-wheeled dump truck. Soft or hard areas and other objectionable material (stumps, wood, organics) shall be excavated and backfilled with compacted structural fill.

4. Prior to the placement of blast rock fill over a bedrock subgrade, voids in the rock surface shall be choked off with appropriately graded crushed stone or Compacted Structural Fill placed on filter fabric to prevent migration of fines into fractures, as directed by the Owner's Representative.

C. Subgrades under proposed landscape areas.

1. Depth to rock under planting areas shall be a minimum of 48 inches below subgrade elevations. Backfill to subgrade shall be with topsoil/loam materials.

2. In lawn areas, scarify subsoil a minimum depth of six inches. Subsoil shall also be cleared of debris and stones larger than four inches prior to topsoil spreading.

3. In planting areas, scarify subsoil a minimum depth of six inches below the required root ball excavation prior to placement of plant backfill mixture.

D. Trenches

1. Compaction equipment used in open areas where space permits shall consist of vibratory rollers weighing at least 15,000 pounds, fully loaded ten-wheel dump trucks, pneumatic compactors or other similar equipment.

2. Compaction equipment for fill against foundation walls and in other confined areas shall be accomplished by means of drum-type, power-driven, hand-guided vibratory compactors operating at 2,000 cycles per minute, or by hand-guided vibratory plate tampers.

3.6 BACKFILLING AND PLACEMENT OF FILL MATERIALS

A. Site

1. Dewater subgrade areas prior to filling.

2. Compaction by puddling or jetting is prohibited.

3. Control groundwater and surface runoff to minimize disturbance of exposed natural ground surface, previously placed and compacted fill and material being placed.

4. Soil fill moisture shall be maintained at an acceptable working range to allow for proper compaction.

5. Do not place fill on frozen ground.

6. Do not place frozen fill.

7. Place fill in uniform horizontal layers and compact immediately after placement. Where the horizontal layer meets a rising slope, the layer shall be keyed into the slope by cutting a bench during spreading of preceding lift.

8. To the extent that is practical, each layer of fill shall be compacted to the specific density the same day it is placed.

9. Slope fill surfaces at the end of each day to provide for free surface drainage.

10. Protect structures and pipes from damage during backfilling operations. Repair damage at no cost to owner.

11. Placement of fill shall not begin prior to observation and approval of subgrade conditions by Engineer.

12. Protect foundations, footings, and waterproofing during backfilling. Repair damage at no cost to Owner.

13. Prior to backfilling between foundation wall and sheeting, remove unsuitable material, including rubbish, organic materials or other debris. Do not commence filling operations until conditions have been observed by Engineer.

14. Backfill shall not be placed against walls until they are braced or have cured sufficiently to develop strength necessary to withstand, without damage, pressure from backfilling and compacting operations.

15. Provide shoring, sheeting, and bracing of excavations as required to assure complete safety against collapse of the earth at the site of excavations. Alternatively, lay back excavations to suitable slope.

16. Upon completion of the work, the final ground surface shall be left in a firm, unyielding, true, uniform condition free from ruts. Repair disturbed areas caused equipment traffic at no cost to Owners.

B. Equipment

1. Compaction equipment used in open areas where space permits shall consist of vibratory rollers weighting at least 15,000 pounds, fully loaded ten-wheel dump trucks, pneumatic compactors of other similar equipment.

2. Compaction equipment for fill against foundation walls and in other confined areas shall be accomplished by means of drum-type, power-driven, hand-guided vibratory compactors operating at 2,000 cycles per minute, or by hand-guided vibratory plate tampers.

C. Blast Rock Backfill – Structure and Foundation Backfilling and Compacting

1. Prior to the placement of blast rock fill over a bedrock subgrade, voids in the bedrock surface shall be choked off with appropriately graded crushed stone or choke stone to prevent migration of fines into fractures as approved by the Owner's Representative.

2. Blast rock fill and crushed stone shall be placed and compacted as indicated below:

   a) Maximum lift thickness prior to compaction is 24 in.

   b) Material shall be dumped 25 feet behind the fill face and pushed forward to allow mixing and removal of oversized rock and backfilling voids.

   c) Should the maximum size of blast rock exceed 18 inches, then use a rock rake with teeth spaced at 18 inches or other means to separate and remove oversized rock.

   d) Provide a minimum of eighteen-inch thick transition zone of choke stone between blast rock fill and granular fill materials. All blastrock fill shall be choked with a transition zone of choke stone, where structural fill is to be placed above or adjacent to it.

   e) Compact each lift of blast rock fill with a minimum of eight passes of a vibratory drum roller that imparts a minimum dynamic force equal to 20,000 lbs. such as a RayGo 600 or approved equal.

   f) Crushed Stone and choke stone placement shall not exceed a maximum lift thickness of 12 inches prior to compaction.

D. Placing Fill

1. Fill sections and embankments shall be constructed of earth, rock or a mixture of earth and rock deposited in successive lifts. Except as hereinafter permitted, the loose thickness of each lift shall not be more than twelve (12) inches before compaction.

2. Rock fill may be used in deep fill areas, placed to the levels and under the conditions described in Section 2.01 K.

3. No rock in excess of six (6) inches in its largest dimension shall be incorporated in the top two (2) foot layer of embankment immediately below the subgrade.

4. During fill and embankment construction operations, earth moving equipment shall be routed as evenly as possible over the entire width of the work.

5. At the close of each day's work the working surface shall be crowned, shaped, and rolled with smooth steel or pneumatic tired rollers to ensure proper drainage.

6. Prior to placing compacted Structural Fill below the slab, the surface of natural ground, shall be proof-rolled with at least four passes of a heavy vibratory drum roller, such as a RayGo 600 or equal. Hard and soft spots shall be excavated and replaced with Structural Fill or other material acceptable to the Owner's Representative.

7. Where excavations for slab-on-grade extend to weathered fractured, or blasted bedrock, the Owner's Representative shall assess the rock surface for the presence of voids and may require placement of a 2 to 18 inch layer of choke stone or crushed stone prior to placement of structural fill.

E. Fills under Parking Areas

1. Paved area subgrades shall be excavated to a minimum of 12 inches beneath required subgrade elevation or existing grade, whichever is lower.

2. Proofroll subgrade with a vibratory roller or by minimum of two passes of a fully loaded ten-wheeled dump truck. Soft or hard areas and other objectionable material (stumps, wood, organics) shall be excavated and backfilled with compacted common fill.

3. Where excavations for pavements extend to weathered, fractured, or blasted bedrock, prepare surface as indicated in Section 3.05 B for building and pavement areas.

4. A minimum of 12 inches of gravel base course shall be provided between subgrade and the bottom of the bituminous surface.

F. Subgrades Under Proposed Landscape Areas

1. Fills under tree and shrub planting areas shall be back filled with topsoil/loam materials.

G. Buildings

1. Prior to the placement of blast rock fill over a bedrock subgrade, voids in the rock surface shall be choked off with appropriately graded crushed stone or Compacted Structural Fill placed on filter fabric to prevent migration of fines into fractures, as directed by the Owner's Representative.

   Blast rock fill and crushed stone shall be placed and compacted as indicated below.

2. Blast Rock Fill Placement and Compaction:

   a) Maximum lift thickness prior to compaction is 24 in.

b) Material shall be dumped 25 feet behind the fill face and pushed forward to allow mixing and removal of oversized rock and backfilling voids.

c) Should the maximum size of blast rock exceed 18 in., then use a rock rake with teeth spaced at 18 in. or other means to separate and remove oversized rock.

d) Provide a minimum of one-foot thick transition zone of crushed stone between blast rock fill and granular fill. All blast rock fill shall be choked with a transition zone of crushed stone, where granular fill is to be placed above it.

e) Compact each lift of blast rock fill with a minimum of eight passes of a vibratory drum roller that imparts a minimum dynamic force equal to 20,000 lbs. such as a RayGo 600 or approved equal.

3. Crushed Stone Placement and Compaction:

   a) Maximum lift thickness prior to compaction is 12 in.

4. Structural Fill: A minimum of 24 inches of compacted structural fill shall be placed in maximum 12-inch lifts immediately below the slabs.

3.7 TRENCH BACKFILLING

A. General

1. Trenches shall be backfilled as soon as practicable with suitable approved materials. All trench backfilling shall be done with special care, in the following manner and as the Engineer may direct from time to time.

2. Backfill material for pipe bedding shall be deposited in the trench, uniformly on both sides of the pipe, for the entire width of the trench to the springline of the pipe. The backfill material shall be placed by hand shovels, in layers not more than 6 inches thick in loose depth, and each layer shall be thoroughly and evenly compacted by tamping on each side of the pipe to provide uniform support around the pipe.

3. Trench backfilling shall be placed so as not to disturb the previously installed pipes, utilities, concrete, and other work within and near the trench. The moisture content of the backfill material shall be such that proper compaction will be obtained. Backfill of trenches within areas of pavement construction shall be made in controlled compacted lifts extending to grades required to establish the proper pavement base courses.

4. In backfilling trenches, each layer of backfill material shall be adequately compacted in such a manner as to provide the required bearing value, so that paving can proceed immediately after backfilling is completed.

5. Any trenches or excavations improperly backfilled, or where settlement occurs, shall be reopened to the depth required for proper compaction, then refilled and compacted with the surface restored to the required grade and condition, at no additional expense to the Owner.

6. During filling and backfilling operations, pipelines will be checked to determine whether any displacement of the pipe has occurred. If the inspection of the pipelines shows poor alignment, displacement of pipe, or any other defects, the condition shall be remedied by removal, realignment, and backfill of the pipe, in a manner satisfactory to the Engineer at no additional cost to the Owner.

B. Embedment

The type of materials to be used in bedding and backfilling shall conform to the details shown on the Drawings and the following:

1. Embedment materials are those used for bedding, haunching and initial backfill. Perform in accordance with ASTM D-2321. The following will describe the soils:

   a) Class I -- Angular crushed stone or rock, dense or open graded with little or no fines (3/4 inch stone size) (to be used in wet conditions or where shown on the Drawings)

   b) Class II - Clean, coarse grained gravel, with a maximum stone size of the 1-1/2 inches

   c) Embedment materials shall be free from lumps of frozen soil or ice when placed. Embedment materials shall be placed and compacted at optimum moisture content.

2. Foundation: A stable utility foundation of Class I or II material must be provided to insure proper line and grade is maintained. Unsuitable foundations such as organics, soft clay, and other soft materials must be removed and the material stabilized. Unsuitable or unstable foundation materials shall be undercut and replaced with a suitable bedding material of Class I or Class II (see 3.08 B5), placed in 6" lifts. The Engineer may approve other methods of stabilization, such as geotextiles.

3. Bedding: Provide a stable and uniform bedding for the pipe and any protruding features of its joints and/or fittings. The bedding for the middle 1/3 of the pipe outside diameter should be loosely placed so that the pipe conforms to the trench. The remainder of the bedding at the base of the trench shall be compacted to a minimum of 95 percent modified proctor density as determined by ASTM Test method D1557. Class I, or II materials are suitable for use as bedding.

4. Haunching: Proper haunching provides a major portion of the pipe's strength and stability. Care must be exercised to insure placement and compaction of the embedment material in the haunches. For larger diameter pipes (> 30"), embedment materials should be worked under the haunches by hand. Haunching materials may be Class I, or II and must be placed and compacted in 6-inch maximum lifts, compacted to 95 percent modified proctor density.

5. Initial Backfill: Initial backfill materials are required for a minimum of 3/4 of the pipe diameter. The initial backfill shall be from the springline to 24 inches above the pipe to provide protection for the pipe from construction operations during placement of the final backfill and protect the pipe from stones or cobbles in the final backfill.

   a) Class I materials must be used in wet trenches and Class I bedding and haunching materials shall be used.

b) Class II materials shall be used unless noted otherwise or wet conditions are encountered. The material shall be compacted in 6 inch lifts to 95 percent modified proctor density (ASTM D1557).

c) Flooding or jetting as a procedure for compaction are not allowed.

6. Controlled Low Strength Materials (CLSM) or Controlled Density Fill (flowable fills) are acceptable backfill materials. Several considerations should be accounted for when using CLSM/CDF backfill. Provisions to prevent floatation of the pipe during placement of the CLSM/CDF must be used. This can include anchoring the pipe by placing flowable fill at the each joint and allowing the fill to partially cure prior to placing the flowable fill along the entire length of the pipe. Also, mechanical anchors such as bent rebar driven into competent soil or precast weights, may be used at each joint to prevent floatation. When using CLSM/CDF, the fill should always be placed to completely encase the pipe.

7. Backfill. Backfill from one foot (two feet for HDPE pipe) above the top of the pipe to subgrade elevations shall be structural fill material. Generally, the excavated trench material may be used as this backfill. This backfill shall be placed in 12-inch maximum lifts and compacted to a minimum of 92 percent modified proctor density to prevent excessive settlement at the surface.

8. Vehicular and Construction Loads: Pipe installation shall be suitable to carry H-25 live loads (40,000 lbs. Axle - legal load) with 24 inches of cover.

3.8 BACKFILLING AGAINST STRUCTURES

A. Backfilling against masonry or concrete shall only be done when approved. The Contractor shall not place backfill against or on structures until they have attained sufficient strength to support the loads (including construction loads) to which they will be subjected, without distortion, cracking or other damage. As soon as practicable after the structures are structurally adequate and other necessary work has been satisfactorily completed, any leakage tests or other testing of the structures shall be made by the Contractor, as required by the Engineer, at the Contractor's expense.

After the satisfactory completion of leakage tests and the satisfactory completion of any other required work in connection with the structures, the backfilling around the structures shall proceed using suitable and approved excavation material. The best of the backfill material shall be used for backfilling within 2 feet of the structure. Just prior to placing backfill, the areas shall be cleaned of all excess construction material and debris and the bottom of excavations shall be in a thoroughly compacted condition.

B. Symmetrical backfill loading shall be maintained. Special care shall be taken to prevent any wedging action or eccentric loading upon or against the structures.

During backfilling operations, care shall be exercised that the equipment used will not overload the structures in passing over and compacting these fills. Except as otherwise specified or directed, backfill shall be placed in layers not more than 12 inches in loose depth and each layer of backfill shall be compacted thoroughly and evenly using approved types of mechanical equipment. Each pass of the equipment shall cover the entire area of each layer of backfill.

C. In compacting and other operations, the Contractor shall conduct his operations in a manner to prevent damage to structures due to passage of heavy equipment over and adjacent to structures. Repair damage made by the Contractor, at no additional expense to the Owner.

D. After backfilling the Contractor shall maintain the surfaces of backfill areas in good condition so as to present a smooth surface at all times level with adjacent surfaces. The Contractor shall repair any subsequent settling over backfilled areas immediately, in a manner satisfactory to the Engineer, and such maintenance shall be provided by the Contractor for the life of this Contract, at no additional expense to the Owner.

E. The finished subgrade of the filled excavations upon which pavements are to be constructed shall not be disturbed by traffic of other operations and shall be maintained in a satisfactory condition until the finished courses are placed. The storage or stockpiling of materials on finished subgrade will not be permitted.

F. Uniformly smooth grading of all areas to be graded, as indicated including excavated sections and all areas disturbed as a result of the Contractor's operations, shall be accomplished. The finished surfaces shall be reasonably smooth, compacted and free from surface irregularities.

3.9 COMPACTION

A. Compaction Requirements

1. The degree of compaction is expressed as a percentage of the maximum dry density at optimum moisture content as determined by ASTM Test D1557, Method C. The compaction requirements are as follows:

Area	Minimum Degree of Compaction
Below footings	95%
Below slabs	95%
Detention basin berms	95%
Pavement base course	95%
Pavement subbase	95%
General fill below pavement subbase	90%
Trench backfill	92%
Lawn areas	90%

2. Compaction percentages are based on the laboratory derived Maximum Density Values.

B. Moisture Control

1. Fill that is too wet for proper compaction shall be harrowed, or otherwise dried to a proper moisture content to allow compaction to the required density. If fill cannot be dried within 24 hours of placement, it shall be removed and replaced with drier fill.

2. Fill that is too dry for proper compaction shall receive water uniformly applied over the surface of the loose layer. Sufficient water shall be added to allow compaction to the required density.

3. In no case shall fill be placed over material that is frozen. No fill material shall be placed, spread or rolled during unfavorable weather conditions. When work is interrupted by heavy rains, fill operations shall not be resumed until the moisture content and the density of the previously placed fill are as specified.

C. Lift Thickness of Material

1. Structural Fill and Sand Borrow. Place in layers not to exceed 12 inches in thickness when utilizing heavy compaction equipment, and 6 inches when utilizing light hand-operated compaction equipment.

2. Common Fill. Place in layers not to exceed 12 inches in thickness when utilizing heavy compaction equipment, and 8 inches when utilizing light hand-operated compaction equipment.

3. Crushed Stone, Gravel, Dense, Graded Crushed Stone for Subbase. Place in layers not to exceed 9 inches in thickness when utilizing heavy compaction equipment, and 6 inches when utilizing light hand-operated compacted equipment. Compact with a minimum of 4 coverages of acceptable compaction equipment.

D. Placing Fill

1. Fill sections and embankments shall be constructed of earth, rock, or a mixture of earth and rock deposited in successive lifts. Except as hereinafter permitted, the loose thickness of each lift shall not be more than twelve (12) inches before compaction.

2. Rock fill may be used in deep fill areas.

3. No rock in excess of six (6) inches in its largest dimension shall be incorporated in the top two (2) foot layer of embankment immediately below the subgrade.

4. During fill and embankment construction operations, earth moving equipment shall be routed as evenly as possible over the entire width of the work.

5. At the close of each day's work the working surface shall be crowned, shaped, and rolled with smooth steel or pneumatic tired rollers to ensure proper drainage.

E. Protection of Fill

1. Protection of compacted fill shall be the responsibility of the Contractor. Newly graded areas shall be protected from the actions of the elements and traffic. Any settlement or washing that occurs prior to acceptance of the work shall be repaired and grades shall be established to the required elevations and slopes. Damage to any compacted lift (including those lifts previously tested and approved by the Engineer) occurring at any time during the course of construction, which is caused by equipment, moisture entering the embankment, or from any other cause, shall be fully repaired by the Contractor prior to placement of overlying materials, at no additional cost to Owner and to the complete satisfaction of the Engineer.

2. In the event of and prior to the commencement of heavy rains, the Contractor shall suspend fill operations immediately and shall take all necessary steps to keep the site as well drained as possible. Fill operations shall not be resumed until the moisture content of the fill is such as to permit compliance with the Specifications.

3. All corrective work or operations necessary to maintain proper moisture control of the fill material shall be at the expense of the Contractor.

F. Grading Tolerances

1. Grading shall be completed to meet or exceed the following tolerances of uniformity*:

Location	Tolerance
Top of Subgrade Beneath Structures	1/2 inch
Top of Subgrade Beneath Paving	1/2 inch
Top of Subgrade Beneath Landscape Areas	1 inches
Top of Gravel and Gravel Bases	1/4 inch

*Uniformity is defined as no variations in the surface materials, at the grades and slopes indicated on the drawings, that exceed the listed tolerance over a length of ten (10) feet horizontally in any direction.

2. The bottom of earth and rock excavations shall be formed to provide a smooth, uniform slope and grade. The bottom of the excavated grade shall be free of pockets, depressions or ridges that would collect or concentrate water, silts or other such objectionable material prior to the Application of Backfill or other Finish Materials.

G. Finish

Upon completion of the work, ground surface shall be left in a firm, unyielding, true, uniform condition, free of ruts.

3.10 SHEETING AND BRACING

A. General

1. Whenever sheeting and bracing will be required, it shall be furnished and installed by the Contractor in accordance with the recommendations of Structural and Geotechnical Engineers engaged by the Contractor.

2. The Contractor shall engage licensed professional Structural and Geotechnical Engineers. These Engineers shall be licensed in the state where the work is occurring and they shall prepare designs for the sheeting and bracing.

3. Submit the sheeting and bracing designs to the Owner and the Engineer for the project record. The sheeting and bracing plans and calculations shall bear the professional seals and signatures of the Contractor's Engineers. These plans and calculations shall be submitted prior to the start of work.

4. The Contractor shall furnish and install the required sheeting and bracing in accord with the submitted designs. The Contractor shall include the costs for this work in his bid price for the project. No additional or separate compensation shall be allowed.

PART 4 – MEASUREMENT AND PAYMENT

4.1 METHOD OF MEASUREMENT

A. Excavation and Fill will be measured PER LUMP SUM for excavation and fill included in this SECTION and as shown in the Drawings, acceptably performed and completed.

B. All excavation, backfilling, compaction of excavated and borrow materials, sheeting, dewatering, chrushed stone bedding, and other incidentals included in this SECTION required for the installation of all pipes and appurtenant structures (sewer, water and drain lines, catch basins, manholes, handholes, conduit, ducts, test pits, planting pits, signage and fence posts, fire alarm, hydrants and valves, service connections, etc.) shall be considered included in the various Bid Items as indicated in Section 004100, FORM OF GENERAL BID and shall not be measured separately.

C. Unless otherwise noted, all earthwork shall be included under any item requiring excavation. Unless otherwise noted, each item specified or shown on the drawings shall be furnished and installed in accordance with the technical section whether a specific applicable payment item exists or not.

D. All work included in this SECTION shall also be subject to relevant provisions of Section 012000 MEASUREMENT AND PAYMENT.

4.2 BASIS OF PAYMENT

A. Excavation and Fill as included in this SECTION and as shown in the Drawings, including excavation, fill, backfill and grading as described in this SECTION, including all materials, equipment, labor, and incidentals, required in accordance with this SECTION, as shown in the drawings, and as directed by the Owner's representative shall be paid LUMP SUM as indicated in Section 004100, FORM OF GENERAL BID and shall be in accordance with Section 012000 MEASUREMENT AND PAYMENT.

B. All excavation, backfilling, compaction of excavated and borrow materials, sheeting, dewatering, bedding, and other incidentals included in this SECTION required for the installation of all pipes and appurtenant structures (sewer, water and drain lines, catch basins, manholes, handholes, conduit, ducts, test pits, planting pits, signage and fence posts, fire alarm, hydrants and valves, service connections, etc.) shall be considered included in the various Bid Items as indicated in Section 004100, FORM OF GENERAL BID and shall not be measured or paid separately.

4.3 PAYMENT ITEMS

Item 31 23 00 EXCAVATION AND FILL	LUMP SUM

END SECTION 312300

INTENTIONALLY BLANK

SECTION 312313 SUBGRADE PREPARATION

PART 1 – GENERAL

1.1 DESCRIPTION

A. This Section specifies requirements for the preparation of the subgrade for and placement of granular pavement subbase and base materials.

B. The work includes:

1. Fine grading and compaction of pavement subgrade.

2. Furnishing, placing and compacting of subbase and base materials.

C. The work excludes:

1. Fine grading and compaction of pavement subgrade for concrete walks and sidewalks.

2. Furnishing, placing and compacting of subbase and base materials for concrete walks and sidewalks.

1.2 RELATED DOCUMENTS

A. Other specification Sections which directly relate to the work of this Section include:

1. Section 312300 – Excavation and Backfill

2. Section 321613.43 – Stone Curbs

3. Section 321640 – Site Cast-in-Place Concrete

PART 2 - PRODUCTS

2.1 GRAVEL SUBBASE AND BASE

A. Gravel shall conform to the requirements of Section 312300 – Excavation and Backfill, Article, 2.1(C) Gravel.

2.2 DENSE GRADED CRUSHED STONE SUBBASE AND BASE

A. Dense graded crushed stone shall conform to the requirements of Earthwork Section 312300 – Excavation and Backfill , Article, 2.1(G) Dense-graded Crushed Stone for subbase and base.

PART 3 EXECUTION

3.1 SUBGRADE PREPARATION

A. All subsurface utility construction shall be completed before fine grading is begun.

B. The pavement and curb subgrade shall be fine graded to the location, elevations and cross slope shown on the Contract Drawings.

C. Subgrades in in-situ soils in excavation areas and in embankment areas shall be compacted during fine grading to 90 percent of maximum dry density in conformance with Section 312300 – Excavation and Backfill.

D. Areas being graded or compacted shall be kept shaped and drained during construction. Ruts greater than or equal to 2 in. deep in sub-grade, shall be graded out, reshaped as required, and re-compacted before placing pavement.

E. Materials shall not be stored or stockpiled on sub-grade.

F. Disposal of debris and other material excavated under this section, and material unsuitable for or in excess of requirements for completing work of this section shall be disposed of off-site.

3.2 SUBBASE MATERIAL PLACEMENT

A. Subbase material shall not be placed until the Engineer has approved the fine grading, compaction and condition of the subgrade.

B. Subbase material shall be placed and spread on the approved subgrade in layers not exceeding eight inches in thickness by approved self spreading equipment. Any displacement of the compacted subgrade material by the equipment shall be restored to the required grade and recompacted before placement of the subbase material.

C. Sub-grade of areas to be paved shall be recompacted as required to bring top 8 in. of material immediately below gravel base course to a compaction at optimum moisture of at least 95% of maximum density, in conformance with Section 312300 – Excavation and Backfill, as determined by ASTM D 1557. Sub-grade compaction shall extend for a distance of at least 1 ft. beyond pavement edge.

D. The surface of the subbase material shall be fine graded to the location, elevations and cross slope shown on the Drawings during final layer compaction operations.

3.3 BASE MATERIAL PLACEMENT

A. Base material shall not be placed until the Engineer has approved the fine grading, compaction and condition of the subbase material.

B. Base material shall be spread on the approved subbase in layers not exceeding four inches in thickness by approved self spreading equipment. Any displacement of the subbase material by equipment shall be restored to the required grade and recompacted before placement of the base material.

C. Base material shall be compacted to 95 percent of dry density in conformance with Section 312300 – Excavation and Backfill.

D. The surface of the base material shall be fine graded to the proposed location, elevations and cross slope shown on the Drawings during final layer compaction operations.

PART 4 – MEASUREMENT AND PAYMENT

4.1 METHOD OF MEASUREMENT

A. Subgrade Preparation generally including, but not limited to, the furnishing, placing, grading and compacting of subbase and base materials for subsequent use in the work, acceptably performed and completed including all materials, equipment, labor and incidentals, in accordance with this SECTION, as shown in the drawings, and as directed by the Owner's representative shall be measured PER LUMP SUM as indicated in Section 004100, FORM OF GENERAL BID.

4.2 BASIS OF PAYMENT

A. The Subgrade Preparation will generally include but is not limited to the furnishing, placing, grading and compacting of subbase and base materials for subsequent use in the work as described in this SECTION and in the Drawings, including all materials, equipment, labor and incidentals, required in accordance with this SECTION, as shown in the drawings, and as directed by the Owner's representative shall be paid PER LUMP SUM as indicated in Section 004100, FORM OF GENERAL BID and shall be in accordance with Section 012000 MEASUREMENT and PAYMENT.

4.3 PAYMENT ITEMS

Item 31 23 13 SUBGRADE PREPARATION	LUMP SUM

END SECTION 312313

INTENTIONALLY BLANK

SECTION 312500 – EROSION CONTROL

PART 1 – GENERAL

1.1 DESCRIPTION

A. This Section specifies requirements for temporary and permanent erosion control provisions as they relate to the construction process.

B. The work includes:

1. Providing and maintaining all temporary erosion control measures shown on the Drawings and required by the Engineer during the life of the Contract to control soil erosion and water pollution.

2. The installation and maintenance of additional silt fence, berms, ditches, sedimentation basins, construction exits, fiber mats, catchbasin filters, straw, netting, gravel, trenches, mulches, grasses, slope drains and other approved erosion control devices or methods, needed to protect any areas on or off site in accordance with the locally designated agency requirements.

1.2 RELATED DOCUMENTS

A. Other specification Sections which directly relate to the work of this Section include:

1. Section 311000 – Site Clearing

2. Section 312300 – Excavation and Fill

3. Section 311400 – Earth Stripping and Stockpiling

4. Section 329200 – Sod Lawns

5. Section 329300 – Plants

1.3 DEFINITION AND COORDINATION OF EROSION CONTROL PROVISIONS

A. Permanent erosion control measures are defined as those elements that are to be incorporated into the final project product, including but not necessarily limited to such items as; finish paving and landscape, detention basin forebays, sedimentation control structures (Contech, Stormceptor, catch basins, etc.), swales and ditches, berms, and other such items.

B. Temporary erosion control measures are defined as those elements that are required by permit approvals and necessary to be installed by the Contractor to meet Federal, State and Local regulations for the construction program, including, but not necessarily limited to, such items as; silt fences, berms, portable sedimentation basins, straw bales, check dams, and other such items, all of which shall be removed by the Contractor after installation of permanent erosion control measures, stabilization of the site, and prior to final completion of the project.

C. The temporary control provisions shall be coordinated with the permanent erosion control features to the extent practical to ensure economical, effective and continuous erosion control throughout the construction and post-construction period.

1.4 QUALITY ASSURANCE

A. Conservation Commission Order of Conditions, DEP File No. 59-1261 is hereby incorporated into these specifications. Contractor shall prepare and post signs as required by the Order of Conditions.

1.5 PRIOR TO CONSTRUCTION

A. Prior to the start of the construction, the Contractor shall submit to the Engineer: schedules for the construction of required stormwater detention basins, temporary and permanent erosion and sediment control work, clearing and grubbing, grading, structures at watercourses, construction, and paving. No work shall be started until control schedules and methods of operations have been submitted to the Engineer.

1.6 CONSTRUCTION OPERATIONS

A. When in the opinion of the Engineer it becomes necessary, the Engineer will inform the Contractor of construction procedures and operations that jeopardize erosion and sedimentation control provisions. If these construction procedures and operations are not corrected promptly, the Owner may suspend the performance of any or all construction until corrections have been made, and such suspension shall not be the basis of any claim by the Contractor for additional compensation from the Owner nor for an extension of time to complete the Work.

PART 2 – PRODUCTS

2.1 MATERIALS

A. Temporary erosion control seed for quick growing grasses such as wheat, rye or oats shall be planted only when permanent grasses (See Section 329200) cannot be planted due to the growing season. All permanent grass areas planted with temporary erosion control seed shall be replaced with permanent seed**.** Apply seed mixture at a rate of 100 pounds per acre.

Seed	% Weight	% Germination Minimum
Winter Rye	80 Minimum	85
Red Fescue (Creeping)	4 Minimum	80
Perennial Rye Grass	3 Minimum	90
Red Clover	3 Minimum	90
Other Crop Grass	0.5 Maximum	
Noxious Weed Seed	0.5 Maximum	
Inert Matter	1.0 Maximum	

B. Erosion Control Blanket/Fabric Netting—See Section 329200 – Turfs and Grasses

1. Earthblankets™ as manufactured by Phase II Stormwater Products, Inc., or approved equal.

C. Straw bale sediment traps consisting of straw bales banded with wire or nylon tape (minimum two bands for bale) approximately two-feet, six-inches in length. Stakes for straw bales shall be 1-1/2 inch by 1-1/2 inch by 4 feet long, or approved equal.

D. Silt fence fabric shall be 100X, as manufactured by TenCate Mirafi®, or approved equal.

E. Filter fabric at construction entrance shall be 600X, as manufactured by TenCate Mirafi®, or approved equal.

F. Compost sock

1. FilterMitts™, as manufactured by Phase II Stormwater products, Inc.

PART 3 – EXECUTION

3.1 EROSION CONTROL – STRAW BALES

A. Straw bales shall be installed at the locations, shown on the Drawings and in general as follows:

1. Toe of slope of embankment construction to filter all runoff flowing to off-site discharges.

2. Toe of temporary earthwork stockpile slopes.

3. Across construction ditches prior to entry into drainage system or waterway, and at 50 foot intervals along the remainder of the ditch.

4. Surrounding completed drainage inlets.

5. Other locations shown on the Contract Drawings and required by laws, regulations, and permits.

B. Tightly abut straw bales to form a continuous barrier. Secure bales in place with two stakes per bale. The bales shall be trenched 4 inches into the ground. Soil shall be constructed on the upside slope of the bales. Deteriorated, destroyed or rotted bales shall be replaced immediately. Sediment shall be removed and disposed of periodically from behind the straw bales. The accumulated sediment shall not be allowed to rise above the mid height of the bale. All sediment, straw bales and appurtenances shall be removed and disposed of at the completion of the Contract.

3.2 TEMPORARY EROSION CONTROL MATS

A. Erosion control mats shall be installed in accordance with the manufacturers recommendations.

B. Areas to receive mats shall be smooth graded and compacted. Remove all rocks, dirt clods, vegetation and other obstructions that may cause damage to the mats.

C. Unroll mats parallel to the direction of water flow and lay flat against the ground. Overlap roll ends 1 to 2 feet with upslope mat on the top to prevent uplift of mat end by water flow. Overlay adjacent edges of mat by six inches. Extend mat 2 to 3 feet above the crest of steep slopes and anchor by excavating a 6 inch deep trench, and secure end of mat in trench, backfill and compact. Secure mat to the ground using staples or pins furnished by manufacturer of mat.

3.3 SILT FENCE

A. Silt fence shall be installed at locations as shown on the Drawings.

B. Supporting posts shall be spaced 4 feet on center, and driven at least one foot into the ground. Posts shall be 1-1/2 inch square or heavier wood posts, or standard steel posts.

C. Fabric shall be anchored in a 4-inch deep trench dug on the upslope side of the posts. The trench shall be at least 4 inches wide. The fabric shall be laid in the trench, backfilled and compacted.

D. Fabric rolls shall be spliced at posts. The fabric shall be overlapped 6 inches, folded over and securely fastened to posts.

E. Silt fences shall be inspected immediately after each storm event and at least daily during prolonged rainfall.

3.4 CONSTRUCTION REQUIREMENTS – TEMPORARY SEDIMENT CONTROL

A. The Contractor shall construct all permanent erosion and sediment control features at the earliest practical time as outlined in the accepted schedule. Temporary erosion and sediment control measures shall be used to correct conditions that develop during construction which were unforeseen, but are needed prior to installation of permanent control features, or that are needed temporarily to control erosion or sedimentation which develops during construction operations.

B. Where erosion is likely to be a problem, clearing and grubbing operations shall be scheduled and performed so that grading operations and permanent erosion and sediment control features can follow immediately thereafter, if conditions permit; otherwise, temporary control measures will be required between successive construction stages.

C. Contractor shall be responsible for controlling erosion within the project area and retaining sediment on-site away from sensitive environmental resources. Any fines, construction delays, remedial actions, or incarceration resulting from the Contractor's failure to comply with these provisions shall be the responsibility of the Contractor and not the Owner.

D. Failure by the Contractor to control erosion, pollution, and siltation shall be cause for the Owner to employ outside assistance to provide the necessary corrective measures. The cost of such assistance, including engineering costs, will be charged to the Contractor and appropriate deductions made to the Contractor's monthly progress payment request.

E. The Contractor shall remove and properly dispose of sediment from control facilities as required by the Engineer. The Contractor shall modify and improve erosion and sedimentation control facilities and replace deteriorated straw bales and other devices as required by the Engineer.

F. Minimum temporary and permanent erosion and sedimentation control measures are shown on the Drawings. The Contractor shall strictly adhere to the minimum provisions shown. Additionally, temporary measures shall be selected and constructed by the Contractor in consultation with the Engineer to accommodate changing field conditions that develop during construction.

G. The temporary sedimentation basins shall be maintained from the start of construction until construction of the permanent detention basins and/or stormwater system is completed and perimeter areas are stabilized. A temporary outlet shall be constructed above the expected sediment levels. Construction of the basins shall be sequenced so that the temporary outlet is installed and basin embankment is constructed with the material available from the initial site excavations.

H. In disturbed areas where construction has permanently or temporarily ceased, the area must be stabilized within 14 days. If earth disturbing activities will resume within 14 days, temporary stabilization is not required.

I. All disturbed areas shall be re-vegetated by loaming and seeding unless otherwise noted on the approved plan.

3.5 MAINTENANCE OF EROSION CONTROL MEASURES

A. The Contractor shall check the condition of erosion and sedimentation control devices daily and maintain them in good operating condition. Straw bales shall be replaced when deteriorated.

B. The Contractor shall inspect the condition of diversion dikes and ditches, filter berms, interceptor dikes, sediment basins and other erosion and sedimentation control devices after each rainstorm and during major storm events. Repairs shall be made as necessary.

C. During construction, temporary outlets of the drainage systems shall direct the flow to temporary or permanent sedimentation basins.

D. Temporary soil erosion and sedimentation control devices shall be removed and adjacent areas outside the limits of grading restored upon completion of the work or when required by the Engineer.

PART 4 – MEASUREMENT AND PAYMENT

4.1 METHOD OF MEASUREMENT

A. Erosion Controls generally including, but not limited to, the furnishing, placing and maintaining for subsequent use in the work, acceptably performed and completed including all materials, equipment, labor and incidentals, in accordance with this SECTION, as shown in the drawings, and as directed by the Owner's representative shall be measured PER LUMP SUM as indicated in Section 004100, FORM OF GENERAL BID.

4.2 BASIS OF PAYMENT

A. The Erosion Controls will generally include but is not limited to the furnishing, placing, and continued maintenance of Erosion Controls during construction for subsequent use in the work as described in this SECTION and in the Drawings, including all materials, equipment, labor and incidentals, guarantees and warrantees for repair and/or replacement against defects, required in accordance with this SECTION, as shown in the drawings, and as directed by the Owner's representative shall be paid PER LUMP SUM as indicated in Section 004100, FORM OF GENERAL BID and shall be in accordance with Section 012000 MEASUREMENT and PAYMENT.

4.3 PAYMENT ITEMS

Item 31 25 00 EROSION CONTROL LUMP SUM

END SECTION 312500

SECTION 321423 STONE PAVING

PART 1 - GENERAL

1.1 GENERAL PROVISIONS

A. Attention is directed to the CONTRACT AND GENERAL CONDITIONS and all Sections within GENERAL REQUIREMENTS which are hereby made a part of this Section of the Specifications.

1.2 DESCRIPTION OF WORK

A. Work Included: Provide labor, materials and equipment necessary to complete the work of this Section, including but not limited to the following:
   1. River Rock Paving Accent
   2. Paver edge restraint
   3. Sand setting bed
   4. Stonedust joint filler
   5. Granite Slab Stair

1.3 SUBMITTALS

A. Manufacturer's Product Data: Manufacturer's product data shall be submitted for each type of product specified.

B. Samples:
   1. River Rock Paving: Provide approximately one yard sample of river rock. River Rock sample shall be sufficient to show full range of color and texture variation to be expected in finished work.
   2. Sand: Submit a 1 lb. bag.
   3. Slabs for granite stair shall be selected from local quarry with Owner's Representative.

1.4 QUALITY ASSURANCE

A. Sample Panel: Construct a sample panel on the specified base and setting bed before start of any paving accent work.
   1. Sample panel shall exhibit proposed color range, texture, bond, jointing, pattern, edge treatment and workmanship.
   2. Size of panel shall be 5 ft. x 5 ft., minimum.
   3. Sample panel shall be inspected by the Owner's Representative. If the sample is not acceptable, construct additional panels at no cost to the Owner until an acceptable panel is constructed. Accepted panel shall become the standard for the entire job, and shall remain undisturbed until completion of all work.

1.5 ACCESSIBILITY COMPLIANCE

A. Special attention is to be given to compliance with the Americans with Disabilities Act (ADA) and the requirements of the Massachusetts Architectural Access Board (MAAB).
   1. Slopes: The cross pitch (perpendicular to travel) for walkways shall be constructed at 1.5% (2% maximum, 1% minimum). The longitudinal slope (parallel to travel) for walkways shall not exceed 4.5%. The slope of handicapped curb cuts shall be constructed at 7% (8% maximum).
   2. Verify slopes with a 2-foot electronic "Smart Level". Pedestrian pavements that do not meet these requirements shall be replaced at the Contractor's expense.
   3. A 5'-0" minimum level (1.5% pitch) area shall be provided at entrances to buildings, which are at an exterior grade continuous with the interior floor grade. Puddling of water at the entrances shall not be allowed.

B. These requirements supercede the grades shown on the plans. If these requirements cannot be met with the grades shown on the plans, notify the Owner's representative immediately for direction.

C. The location and construction of handicapped curb cuts shall be reviewed and approved by the Municipal Engineer prior to construction.

1.6 PROJECT CONDITIONS

A. Protection: The Contractor shall use all means necessary to protect the materials of this Section before, during and after installation. In the event of damage, make all repairs and replacements necessary to approval of the Owner's Representative and at no additional cost to the Owner. All work shall be executed in such a manner as to prevent any damage to existing streets, curbs, paving to remain, existing plant materials, and adjoining properties.

B. The Contractor shall remove all debris, construction equipment and waste material from areas within the limit of work prior to inspection for acceptance.

C. The Drawings indicate, in general, the alignment and finished grade elevations. The Owner's Representative, however, may make minor adjustments in grades and alignment as are found necessary.

1.7 DELIVERY, STORAGE, AND HANDLING

A. River Rock shall be carefully packed by the supplier for shipment.

B. River Rock shall be stored off the ground and protected against staining and other damage.

C. Aggregate materials shall be kept dry and free from soiling.

D. Materials damaged in any manner will be rejected and replaced with new materials at no additional cost to the Owner.

PART 2 - PRODUCTS

2.1 RIVER ROCK

A. River Rock shall be approximately 1-3" inches diameter.

B. River Rock shall be uniform in color and texture with no cracks, fractures or other deformities that will compromise structural integrity or aesthetic character.

2.2 GRANITE SLAB STAIR

A. Granite Slab Stairs shall be approximately 6- to 7-inches thick, hand-cut, thermal finish.

B. Color shall be dark blue-gray charcoal; Owner's Representative shall approve samples prior to delivery to site.

C. Granite shall be uniform in color and texture with no cracks, fractures or other deformities that will compromise structural integrity or aesthetic character.

D. Exposed surfaces shall be natural cleft.

2.3 SAND SETTING BED

A. Sand for bedding shall be clean, washed concrete sand conforming to ASTM C 33. Do not use mason sand or stone dust for setting pavers.

B. Sand shall be supplied from a single source.

2.4 JOINT FILLER

A. Stone Dust: Conform to Massachusetts Highway Standard Specifications. Color to match pavers, unless indicated otherwise.

B. Crushed Aggregate Screenings/Stone Dust shall conform to the following analysis:

Sieve Size	Percent Passing (%)
3/8"	100
#4	75 – 100
#100	10 - 30

C. Joint filler shall be supplied by a single source. Source of supply shall not be changed during course of project without written permission of the Owner's Representative.

2.5 PAVER EDGE RESTRAINT

A. Paver edge restraint system consists of flexible sections of PVC designed to permanently restrain paver units where they abut landscape surfaces:
   1. Pave Edge, manufactured by Pave Tech Inc. and distributed by Pavers by Ideal, (800) 444-7287; www.idealconcreteblock.com/pavers.cfm.
   2. Bric-Edg as manufactured by Oly-Ola Edgings, Inc., 1-800-EDGINGS; www.olyola.com.
   3. Diamond-Lok as manufactured by Valley View Industries, 800-323-9369; www.valleyviewind.com.

PART 3 - EXECUTION

3.1 ACCEPTABILITY OF BASE

A. The Contractor and his Subcontractors shall inspect all subbases for unstable, unsuitable or improperly prepared areas. Do not begin work over unacceptable areas. Beginning work means the Contractor and his Subcontractors accept the subbase, previous work and conditions and shall be held responsible for any corrections required to properly implement the Construction Documents.

3.2 SAND SETTING BED

A. Bedding sand shall be screeded to a compacted depth as shown on the details but in no case more than 1-1/2". Do not use sand to fill depressions in the base material.

3.3 SETTING PAVERS

A. River Rock and Granite Slab Stairs shall be set on the compacted setting bed as detailed or specified herein. All setting shall be done by competent masons under adequate supervision.

B. Stone shall be set true to the required lines and grades and pattern indicated on the Drawings. Unit pavers shall be neatly cut and fitted at all perimeters and closures to fit neatly and closely, with joints uniform in thickness. Stone shall be cut with a water-cooled, cut-off wheel masonry saw using a diamond blade.

3.4 JOINT TREATMENT

A. Joints between pavers shall be uniform in width. Joint thickness shall not exceed 1/4 inch.

B. Stone dust joint filler shall be swept dry into the joints between pavers until the joints are completely filled. Surface shall be swept clean. Swept surface shall than be thoroughly dampened with a low volume fine spray of water.

3.5 PAVER EDGE RESTRAINT

A. Install paver edge restraint system as recommended by the manufacturer and as directed.

3.6 PROTECTION OF FINISHED SURFACES

A. Finished surfaces adjacent to the unit paving work shall be adequately protected from soiling, staining, and other damage during construction.

PART 4 – MEASUREMENT AND PAYMENT

4.1 METHOD OF MEASUREMENT

A. Stone Paving will be measured under one LUMP SUM complete in place, including all necessary transportation, setting beds, mortars, aggregates, coring, drilling, field adjustments, fillers, joints, and appurtenances required in accordance with this Specification and as shown in the drawings, and as directed by the Owner's representative.

4.2 BASIS OF PAYMENT

A. Payment for Stone Paving will be PER LUMP SUM and shall include all labor, tools, materials, equipment and transportation required to complete the work to the satisfaction of the Owner's Representative.

4.3 PAYMENT ITEMS

Item 321423	STONE PAVING	LUMP SUM

END SECTION 321423

SECTION 321613.43 STONE CURBS

PART 1 – GENERAL

1.1 DESCRIPTION

A. This Section specifies requirements for furnishing and installing granite curbs.

B. The work includes:

1. Furnishing and installing granite curb.

2. All associated items and operations required to complete the installations, including surface preparation, concrete support, jointing and finishing.

1.2 RELATED DOCUMENTS

A. Other specification Sections which directly relate to the work of this Section include:

1. Section 311000 – Site Clearing

2. Section 311400 – Earth Stripping and Stockpiling

3. Section 312300 – Excavation and Fill

4. Section 312313 – Subgrade Preparation

5. Section 321640 – Site Cast-In-Place Concrete

1.3 REFERENCE STANDARDS

A. References herein are made in accordance with the following abbreviations and, all work under this Section shall conform to the latest editions as applicable.

B. ACI 304—Recommended Practice for measuring, mixing, transporting and placing concrete.

C. ANSI/ASTM D1751—Preformed Expansion Joint Fillers for Concrete Paving and Structural Construction (Non extruding and Resilient Bituminous Types).

D. ANSI/ASTM D1752—Preformed Sponge Rubber and Cork Expansion Joint Fillers for Concrete Paving and Structural Construction.

E. ASTM C33—Concrete Aggregates.

F. ASTM C94—Ready-Mixed Concrete.

G. ASTM C150—Portland Cement.

H. ASTM C260—Air-Entraining Admixtures for Concrete.

I. ASTM C309—Liquid Membrane-Forming Compounds for Curbing Concrete.

J. ASTM C494—Chemical Admixtures for Concrete.

1.4 SUBMITTALS

A. Submit Shop Drawings and Manufacturer's literature for granite curb, edging, corners and inlets, indicating size, shape and dimensions, finish and setting method for Engineer's approval.

B. As-Built Drawings

1. As-Built Drawings shall indicate the true measurements and horizontal locations of the new curb construction. As-Built Drawings shall be stamped with the seal of a Licensed Land Surveyor and Licensed Professional Engineer.

2. Submit 4 sets of 24-inch by 36-inch drawings and a digital copy in a CD format to the Engineer prior to obtaining substantial completion certificate.

1.5 DELIVERY, STORAGE AND HANDLING

A. Granite units shall be adequately protected from damage during transit to the site.

B. Curbing shall be protected against staining, chipping, and other damage. Cracked, badly chipped, or stained units will be rejected and shall not be employed in the work.

1.6 SAMPLES

A. The Contractor shall supply to the site three samples of all curb types for approval prior to ordering materials. Approved sample material may be used in the work upon approval by the Engineer.

PART 2 – PRODUCTS

2.1 GRANITE CURB

A. Granite curb shall be basically light gray in color, free from seams and other structural imperfections or flaws which would impair its structural integrity, and of a smooth splitting appearance. Natural color variation characteristic of the deposit from which the curb is obtained will be permitted.

B. Whenever curbing is sawed, all surfaces that are to be exposed shall be thoroughly cleaned and any iron rust or iron particles removed by sand blasting or other methods approved by the Engineer and any saw mark in excess of 1/8 inch shall be removed.

C. <u>Dimensions</u>

1. The stones for the several types of granite curb shall be cut to the dimensions and curvature hereinafter needed:

Type	Min. Length	Width at Top	Depth	Minimum Width at Bottom
Highway	6 Feet	6 Inches	17 to 19 Inches	4 Inches (for 2/3 length)
Site	3 Feet	5 Inches	15-17 Inches	3-1/2 Inches (for 2/3 length)

Stones to be set on a radius of 100 feet or less shall be cut to the required curvature, unless otherwise approved and, except for making closures, shall be of the following minimum lengths:

Radius	Minimum Length
50 Feet to 100 Feet	6 Feet
25 Feet to less than 50 Feet	4 Feet 6 Inches
10 Feet to less than 25 Feet	3 Feet

D. Finish

1. Granite curb shall have a top surface free from wind, shall be peen hammered or sawed to an approximately true plane, and shall have no projections or depressions greater than 1/8 inch. The front and back arris lines shall be pitched straight and true and there shall be no projection on the back surface for 3 inches down from the top which would exceed a batter of 4 inches to 1 foot.

   The front face shall be at right angles to the planes of the top and ends and shall be smooth quarry split, free from drill holes and with no projection of more than 1 inch and no depression of more than 1/2 inch measured from the vertical plane of the face through the arris or pitch line for a distance down from the top of 8 inches. For the remaining distance, there shall be no projection or depression greater than 1 inch measured in the same manner.

   The ends of all stones shall be square with the planes of the top and face so that when the stones are placed end to end as closely as possible, no space shall show in the joint at the top and face of more than 1/2 inch for the full width of the top and for 8 inches down on the face; after which the end may break back not over 8 inches from the plane of the joint. The arris formed by the intersection of the plane of the joint with the planes of the top and exposed faces shall have no variation from the plane of the top and exposed faces greater than 1/8 inch.

2.2 CEMENT MORTAR

A. Cement mortar shall be composed of one part Portland Cement and two parts of sand by volume with sufficient water to form a workable mix. Cement shall be Portland Cement Type II.

2.3 TRANSITION SECTIONS

Horizontal transition sections shall be provided at all locations where curb sections change (i.e., vertical to sloped). Vertical transition sections shall also be provided for precast curb sections at

wheelchair ramps. Vertical transition sections for granite curb shall be made as shown on the Drawings.

PART 3 - EXECUTION

3.1 GENERAL

A. Trenching, excavation, backfilling, and compaction shall be completed in accordance with Section 312300 – Excavation and Fill, except as modified within this Section.

B. Cement mortar bedding, if required, shall be placed as shown on the drawings and in accordance with Section 0321640 – Site Cast-in-Place Concrete.

3.2 GRANITE CURB AND EDGING INSTALLATION

A. Excavation shall extend 6 inches below and behind curb, as shown on the Drawings.

1. The gravel base shall be placed in the excavated area, graded and compacted to above the proposed curb subgrade.

B. Curbing and curb corners shall be set on additional gravel spread upon the foundation. All spaces under the curb and curb corners shall be filled with gravel thoroughly compacted so that the curb and curb corners will be completely supported throughout their length. The curb shall be set at the line and grade required as shown on the plans unless otherwise directed.

C. Edging shall be set on a thoroughly compacted base so that the edging will be completely supported throughout their length. Concrete shall be placed to support the edging base as shown on the plans.

D. Curb, curb corners or edging shall be fitted together as closely as possible.

E. Immediately after the curb, curb corners, curb inlets, and edging is set, the space between it and the wall of the trench shall be filled with gravel thoroughly tamped to a depth of 6 inches, care being taken not to affect the line or grade of the curb, curb corners, curb inlets and edging. The trench shall continue to be filled with gravel and compacted in 6-inch lifts until grade is achieved. If the curb materials and trench are part of reconstruction work and existing bituminous concrete surface is to remain, then the use of concrete backfill is acceptable, to an elevation suitable to support the pavement patch or section.

F. The joints between curbstones (both front and back) or edging shall be carefully filled with cement mortar and neatly pointed on the top and front exposed portions. After pointing, the curbstones or edging shall be satisfactorily cleaned of all excess mortar that may have been forced out of the joints.

G. Transitions from normal curb settings to wheelchair ramps shall be accomplished with transition curb as shown on the drawings. Transitions shall be of the same type curb and similar to that abutting and, if on a curve, of the same radius.

H. The ends of the stone curb at driveways and intersections shall be cut at a bevel or rounded, as shown on the Drawings.

I. If curb, curb corners, curb inlets or edging of different quarries is used on the same project, curbing of each particular quarry shall be segregated and set to give uniform appearance.

J. Procedures for removal and resetting of existing granite curb, and new granite curb, in existing pavements shall include the following:

1. Prior to excavation for existing granite curb removal, the pavement surface shall be saw cut a minimum of one foot from the face of curb.

2. Existing curb shall be carefully excavated, and removed in a manner that protects the curb and existing pavement to remain from damage.

3. Existing granite curb shall be cleaned by sandblasting as required to remove bituminous material, paint and concrete from exposed surfaces prior to resetting in the proposed work.

4. New granite curb shall be set to match the top of existing granite curb remaining in place at abutting sections and, if required, transitioned to the typical section shown on Drawings within the first section of curb. Cement concrete shall be placed along the front face of the curb as shown on the Drawings.

PART 4 – MEASUREMENT AND PAYMENT

4.1 METHOD OF MEASUREMENT

A. Stone Curbs generally including, but not limited to, surface preparation, concrete support, jointing and finishing for subsequent use in the work, acceptably performed and completed including all materials, equipment, labor and incidentals, in accordance with this SECTION, as shown in the drawings, and as directed by the Owner's representative shall be measured PER LINEAR FOOT as indicated in Section 004100, FORM OF GENERAL BID.

4.2 BASIS OF PAYMENT

A. Stone Curbs will generally include but is not limited to the surface preparation, concrete support, jointing and finishing for subsequent use in the work as described in this SECTION and in the drawings, including all materials, equipment, labor, incidentals, guarantees and warrantees for repair and/or replacement against defects, as described in this SECTION, as shown in the drawings, and as directed by the Owner's representative shall be paid PER LINEAR FOOT as indicated in Section 004100, FORM OF GENERAL BID and shall be in accordance with Section 012000 MEASUREMENT and PAYMENT.

4.3 PAYMENT ITEMS

Item 32 16 13.43	VERTICAL GRANITE CURB	LINEAR FOOT

END SECTION 321613.43

INTENTIONALLY BLANK

SECTION 321640 SITE CAST-IN-PLACE CONCRETE

PART 1 – GENERAL

1.1 DESCRIPTION

A. This Section specifies requirements for concrete cast-in-place on the site.

B. The work of includes cast-in-place concrete pavement.

1.2 RELATED DOCUMENTS

A. Other specification Sections which directly relate to the work of this Section include:

1. Section 311400 – Earth Stripping and Stockpiling
2. Section 312300 – Excavation and Fill
3. Section 321613.43 – Stone Curbs

1.3 REFERENCE STANDARDS

A. References herein are made in accordance with the following abbreviations and all work under this Section shall conform to the latest editions as applicable.

<u>American Concrete Institute (ACI)</u>

ACI 301 -	Specifications for Structural Concrete for Building
ACI 305R -	Hot Weather Concreting
ACI 306R -	Cold Weather Concreting
ACI 316R -	Recommendations for Construction of Concrete Pavements and Concrete Bases

<u>American Society for Testing and Materials (ASTM)</u>

ASTM 185 -	Welded Wire Steel Fabric for Concrete Reinforcement
ASTM 615 -	Deformed and Plain Billot Steel Bars for Concrete Reinforcement
ASTM C31M	Standard Practice for Making and Curing Concrete Test Specimens in the Field.
ASTM C33 -	Concrete Aggregates
ASTM C94 -	Ready-Mixed Concrete
ASTM C143 -	Slump of Portland Cement Concrete
ASTM C150 -	Portland Cement
ASTM C171 -	Sheet Materials for Curing Concrete
ASTM C231 -	Air Content of Freshly Mixed Concrete by the Pressure Method
ASTM C260 -	Air Entraining Admixtures for Concrete
ASTM C309 -	Liquid Membrane-Forming Compounds for Curing Concrete
ASTM C494 -	Chemical Admixtures for Concrete
ASTM C1116 -	Standard Specifications for Fiber-Reinforced Concrete and Shortcrete.

Concrete Reinforcing Steel Institute (CRSI)
Manual of Standard Practice.

Americans with Disabilities Act and State Regulations

1.4 QUALITY ASSURANCE

A. Work and materials for construction of the cement concrete walks shall conform to ACI 316R. Other cast-in-place concrete shall conform to ACI 301.

B. Work, materials, and color of the wheelchair ramp paving shall conform to applicable sections of Americans with Disabilities Act (ADA) and State standards, whichever is more stringent.

C. Dimensions, locations, and details of equipment pads, anchors, supports, and similar features shown on the drawings are approximate. Manufacturer's approved shop Drawings of equipment to be supported, anchored, or contained thereby shall be consulted for exact location, size and details.

D. Paving work, base course etc., shall be done only after excavation and construction work which might injure them has been completed. Damage caused during construction shall be repaired before acceptance.

E. Existing paving areas shall, if damaged or removed during course of this project, be repaired or replaced under this section of the specification. Workmanship and materials for such repair and replacement, except as otherwise noted, shall match as closely as possible those employed in existing work.

F. Pavement, base, or sub-base shall not be placed on a muddy or frozen sub-grade.

G. The Owner reserves the right to retain an independent testing laboratory to perform inspection and testing of paving and associated work in accordance with Section QUALITY CONTROL.

1.5 ACCESSIBILTY COMPLIANCE

A. Special attention is to be given to compliance with the Americans with Disabilities Act (ADA) and the requirements of the Massachusetts Architectural Access Board (MAAB).

1. Slopes: the cross pitch (perpendicular to travel) for walkways shall be constructed at 1.5% (2% maximum, 1% minimum). The longitudinal slope (parallel to travel) for walkways shall not exceed 4.5%. The slope of handicapped curb cuts shall be constructed at 7% (8% maximum).

2. Verify slopes with a 2-foot electronic “Smart Level”. Pedestrian pavements that do not meet these requirements shall be replaced at the Contractor’s expense.

3. A 5’-0” minimum level (1.5% pitch) area shall be provided at entrances to buildings, which are at an exterior grade continuous with the interior floor grade. Puddling of water at the entrances shall not be allowed.

B. These requirements supersede the grades shown on the plans. If these requirements cannot be met with the grades shown on the plans, notify the Owner's representative immediately for direction.

C. The location and construction of handicapped curb cuts shall be reviewed and approved by the Municipal Engineer prior to construction.

1.6 SUBMITTALS

A. Description of methods and sequence of placement for each type of specially-finished concrete, including description of methods and sequence of placement.

B. Manufacturer's product data for the following:

1. Form release agent.

2. Concrete job mix formula

3. Preformed joint filler.

4. Concrete reinforcement specification data from manufacturer.

C. Submit samples of the following:

1. For cement concrete paving show expansion joints, tooling and finish. Mimimum 6' x 6' sample panel.

2. Preformed joint filler.

1.7 TESTING

A. The Owner may employ an independent testing laboratory to inspect and test concrete paving and other cast-in-place concrete work.

B. When requested, Contractor shall prepare test specimens in accordance with ASTM C31M, standard cylinder size 4-inch x 8 inch.

C. Testing of materials and installed work may occur at any time during progress of the work. Rejected materials and installed work shall be removed and replaced.

PART 2 – PRODUCTS

2.1 STEEL REINFORCEMENT

A. Steel reinforcing bars shall conform to ASTM A615, Grade 60, deformed.

1. Bars employed as dowels shall be hot-rolled plain rounds.

B. Steel wire: ASTM A82, plain cold drawn steel.

C. Welded wire fabric reinforcement shall conform to the applicable requirements of ASTM A185. Fabric reinforcement shall be furnished in flat sheets. Fabric reinforcement in rolls will not be permitted.

D. Supports for Reinforcement: Bolsters, chairs, and other devices for spacing, supporting, and fastening reinforcing bars, and welded wire fabric in place shall be wire bar-type supports complying with CRSI specifications.

1. For slabs-on-grade, use supports with sand plates or horizontal runners where base material will not support chair legs.

2. For exposed-to-view concrete surfaces where legs of supports are in contact with forms, provide supports with legs that are protected by plastic (CRSI, Class 1).

2.2 PORTLAND CEMENT CONCRETE

A. Portland cement concrete shall:

1. Have a maximum water cement ratio of 0.45 conforming to ACI 316R.

2. Be Air-entrained type conforming to ASTM C94. Air content by volume shall be 6 percent ± 1 percent, and shall be tested in accordance with ASTM C231.

3. Be placed with a slump not less than 3 inches nor greater than 4 inches, determined in accordance with ASTM C143.

4. Use cement conforming to ASTM C150, Type I or II. Only one color of cement, all of the same manufacturer, shall be used for the work.

5. Use fine and coarse aggregates conforming to ASTM C33.

6. Contain a water reducing agent to minimize cement and water content of the concrete mix at the specified slump. Water reducing agent shall conform to ASTM C494, Type A.

7. Contain no calcium chloride or admixtures containing calcium chloride shall be added to the concrete. No admixtures other than those specified shall be used in the concrete without the specific written permission of the Engineer in each case.

2.3 CONCRETE AGGREGATES

A. Provide in conformance with ASTM C33.

B. Fine aggregates in conformance with ASTM C33, part 6.

C. Coarse aggregates in conformance with ASTM C33, parts 9 thru 11 and tables 2 and 3, with the following Class designations:

1. 1S – For footings and foundations not exposed to the weather.

2. 4S – For pavements, driveways, curbs, walkways, sidewalks, and retaining walls, that are exposed to the weather.

3. 1N – For pavements, driveways, curbs, walkways, sidewalks, and retaining walls that are not exposed to the weather.

D. Exposed Aggregate for ADA curb ramps shall be selected, hard, durable, washed rounded stones free of deleterious reactivity to cement with graded sizes between ½ to ¾ inch diameter nominal sieves.

2.4 COLORED CONCRETE

Not Used

2.5 CURING MATERIALS FOR UNCOLORED CONCRETE

A. Curing shall be accomplished by the following methods:

1. Moist curing with burlap covering.

2. Curing paper, nonstaining, fiber reinforced laminated Kraft bituminous product conforming to ASTM C171. Four mil polyethylene sheeting may be substituted for curing paper.

3. Curing compound, a resin-base, white pigmented compound conforming to ASTM C309, Type 2.

2.6 EXPANSION JOINTS

A. Expansion joint filler shall be preformed, nonbituminous type conforming to ASTM D1752, Type II, similar to Sealtight Cork Expansion Joint Filler, manufactured by W.R. Meadows, Inc., 300 Industriral Drive, Hampshire, IL 60120; tel. (800)342-5976 or approved equivalent.

1. Premolded filler shall be one piece for the full depth and width of the joint.

2. Use of multiple pieces of lesser dimensions to make up required depth and width of joint will not be permitted.

3. Except as otherwise noted on the Drawings, joint filler shall be 1/2 in. thick.

B. Smooth dowel shall be hot rolled plain steel dowel bonded at one end and operating in smooth close fitting sleeve (of same material) at the other.

C. Unless otherwise indicated on the Drawings, expansion joints shall be located 30 ft. o.c., maximum.

2.7 CONTROL JOINTS

A. Joint filler to be polyethylene foam with manufacturer's recommended sealant.

2.8 FORMS

A. Cylindrical Forms: Sonotube Fibre Forms, wax-impregnated strippable forms manufactured by Sonoco Products Company, General Products Division, ABS or PVC plastic reusable forms, or approved equivalent.

B. Forms for Exposed Finish: Plywood, metal, metal-framed plywood faced, or other acceptable panel materials. Plywood shall be APA Ref. 1 B-B (Concrete Form), Class I Exterior Grade plywood or B-B or A-C Class I high density overlay concrete form plywood. Form work materials shall produce smooth, continuous, straight and level surfaces.

C. Forms for Unexposed Finish: Plywood, lumber or metal, with lumber dressed on at least two edges and one side.

D. Form Ties: Prefabricated, adjustable length galvanized steel snap-off ties, with brackets, cones, cornerlocks and other accessories as necessary.

E. Form Release Agent: Commercial formulation compounds that will not bond with, stain or adversely affect concrete.

F. Imprinting Tools: Mats and tools used to stamp projecting texture and patterns onto plastic concrete surfaces shall be specifically designed with rigid back supports to enable a clean, sharp, stamping image. Stamps for curb ramps shall be designed to meet ADA detectable warning requirements.

2.9 FIBROUS REINFORCING

A. Material shall meet ASTM C1116 and shall be as manufactured by NyCon Incorporated, or approved equal.

B. Mix fibrous reinforcement in accordance with manufacturer's instructions including product data and technical bulletins.

1. Add fibrous reinforcement to concrete mix at the concrete batch facility.

2. Adding and mixing fibrous reinforcement at the job site will not be allowed.

C. Provide job mix design data to show concrete mix will attain specified strength requirements.

PART 3 - EXECUTION

3.1 PREPARATION OF SUBGRADE

A. The subgrade of areas to be paved shall be graded and compacted as specified in Section 312313 – Subgrade Preparation.

B. Excavation required in pavement subgrade shall be completed before fine grading and final compaction of subgrade are performed. Where excavation must be performed in completed subgrade, subbase, base, or pavement, subsequent backfill and compaction shall be performed as required by the Engineer and as specified in Section 312300 – Excavation and Fill.

C. Materials shall not be stored or stockpiled on subgrade.

D. Prepared subgrade will be inspected by the Engineer. Subgrade shall be approved for installation of the gravel base course. Disturbance to subgrade caused by inspection procedures shall be repaired.

3.2 BASE COURSE

A. Base course for concrete paving shall be pavement subbase course or gravel base materials specified in Section 312300 – Excavation and Fill, as shown on the Drawings.

B. Width of base course shall extend beyond edge of the proposed pavement as shown on the Drawings.

C. Material shall be placed in lifts no more than 6 inches thick, compacted measure. Each lift shall be separately compacted to specified density.

1. Material shall be placed adjacent to wall, manhole, catch basin, and other structures only after they have been set to required grade.

2. Rolling shall begin at sides and progress to center of crowned areas, and shall begin on low side and progress toward high side of sloped areas. Rolling shall continue until material does not creep or wave ahead of roller wheels.

3. Surface irregularities which exceed 1/2 inch as measured by means of a 10 foot long straightedge, shall be regraded and recompacted.

D. Base course shall be compacted at optimum moisture content to not less than 95 percent of maximum density as determined by ASTM D1557.

D. The base course shall be kept clean and uncontaminated. Less select materials shall not be permitted to become mixed with the base course material.

E. Portions of sub-grade or of construction above which become contaminated, softened, or dislodged by passing of traffic, or otherwise injured, shall be cleaned, replaced, or otherwise repaired to conform to the requirements of this specification before proceeding with next operation.

3.3 STEEL REINFORCEMENT

A. Before being placed in position, reinforcing steel shall be thoroughly cleaned of loose mill and rust scale, dirt, ice, and other foreign material which may reduce the bond between the concrete and reinforcing. Where there is delay in placing concrete after reinforcement is in place, bars shall be reinspected and cleaned when required.

B. Any bar showing cracks after bending shall be discarded.

C. Unless otherwise shown on the Drawings, reinforcing shall extend within 2 inches of form work and expansion joints. Reinforcing shall continue through control joints. Adjacent sheets of fabric reinforcing shall lap 6 inches.

D. After forms have been coated with form release agent, but before concrete is placed, reinforcing steel shall be securely wired in the required position and shall be maintained in that position until concrete is placed and compacted. Chair bars and supports shall be installed in a number and arrangement approved by the Engineer.

3.4 FORMS

A. General: Design, erect, support, brace, and maintain formwork to support vertical, lateral, static, and dynamic loads that might be applied until concrete structure can support such loads. Construct formwork so concrete members and structures are of correct size, shape, alignment, elevation, and position. Maintain formwork construction tolerances and surface irregularities complying with the following ACI 347 limits.

1. Provide Class A tolerances for concrete surfaces exposed to view.

2. Provide Class C tolerances for other concrete surfaces.

B. Construct forms to provide for openings, offsets, sinkages, keyways, recesses, moldings, chamfers, blocking, screeds, bulkheads, anchorages, and inserts, and other features required for the work. Use selected materials to obtain required finishes. Solidly butt joints and provide back-up at joints to prevent cement paste from leaking.

C. Fabricate forms for easy removal without hammering or prying against concrete surfaces. Kerf wood inserts for forming keyways, reglets, recesses, and other features for easy removal.

D. Chamfer exposed corners and edges, using wood, metal, PVC, or rubber chamfer strips fabricated to produce uniform smooth lines and tight edge joints.

E. Thoroughly clean forms and adjacent surfaces to receive concrete. Remove chips, wood, sawdust, dirt or other debris just before placing concrete. Re-tighten forms and bracing before placing concrete, as required, to prevent mortar leaks and maintain proper alignment.

3.5 INSTALLING EMBEDDED ITEMS

A. General: Set and build into formwork the anchorage devices and other embedded items required for work that is attached to, or supported by, cast-in-place concrete. Use setting drawings, diagrams, instructions, and directions provided by suppliers of items to be attached.

B. Forms for Slabs: Set edge forms, bulkheads, and intermediate screen strips for slabs to achieve required elevations and contours in finished surfaces. Provide and secure units to support screed strips using strike-off templates or compacting-type screeds.

3.6 PREPARING FORM SURFACES

A. Coat contact surfaces of forms with an approved, nonresidual, low-VOC form-coating compound before placing reinforcement.

3.7 CONCRETE PLACING

A. Equipment, methods of mixing and placing, and precautions to be observed as to weather, and condition of base shall meet the requirements of ACI 316R.

B. The Engineer shall be notified of scheduled concrete placement sufficiently in advance of start of operation to allow preliminary inspection of the work, including subgrade, forms, and reinforcing steel.

C. Work shall not be performed during rainy weather or when temperature is less than 40°F (4.4°C).

D. Adjacent work shall be protected from stain and damage. Damaged and stained areas shall be replaced or repaired to equal their original conditions.

E. Existing concrete, earth, and other water-permeable material against which new concrete is to be placed shall be thoroughly damp when concrete is placed. There shall be no free water on surface.

F. Concrete which has set or partially set, before placing shall not be used. Retempering of concrete will not be permitted.

G. Concrete shall be thoroughly vibrated, or otherwise consolidated to secure a solid and homogeneous mass, thoroughly worked around reinforcement and into corners of forms.

H. When joining fresh concrete to concrete which has attained full set, latter shall be cleaned of foreign matter, and mortar laitance shall be removed by chipping and washing. Clean, roughened base surface shall be saturated with water, but shall have no free water on surface. A coat of 1:1 cement-sand grout, approximately 1/8 inch thick, shall be well scrubbed into the thoroughly dampened concrete base. New concrete shall be placed immediately, before grout has dried or set.

3.8 FINISHING

A. Concrete surfaces shall be screeded and finished true to line and grade, and free of hollows and bumps. Surface shall be dense and smooth.

1. Finished concrete surface for concrete subbases shall be woodfloated to a slightly rough surface. Surface shall not deviate more than 1/4 inch in 10 feet.

2. Finished concrete surfaces shall be wood-floated and steel troweled, or broom finished, to a uniform surface. Surface shall not deviate more than 1/8 inch in 10 feet.

B. Horizontal surfaces of concrete surfaces which will be exposed shall be given a light broomed finish, with direction of grooves in concrete surface perpendicular to length of concrete band, slab, or pad. After concrete has set sufficiently to prevent coarse aggregate from being torn from surface, but before it has completely set, brooms shall be drawn across the surface to produce a pattern of small parallel grooves. Broomed surface shall be uniform, with no smooth, unduly rough or porous spots, or other irregularities. Coarse aggregate shall not be dislodged by brooming operation.

C. Immediately following finishing operations, arises at edges and both sides of expansion joints shall be rounded to a 1/4 inch radius. Control joints to be tooled shall be scored into slab surface with scoring tool. Adjacent edges of control joint shall at same time be finished to a 1/4 inch radius.

D. Where finishing is performed before end of curing period, concrete shall not be permitted to dry out, and shall be kept continuously moist from time of placing until end of curing period, or until curing membrane is applied.

E. Sidewalks, walkways, accessible routes, and ramps shall be constructed and finished in accordance with the Americans With Disabilities Act, and State and Local requirements.

F. Exposed –Aggregate Finish: Expose coarse aggregate in pavement surfaces as follows:

1. Immediately after float finishing, spray-apply chemical surface retarder to pavement according to manufacturer's written instructions.

2. Cover pavement surface with plastic sheeting, sealing laps with tape, and remove when ready to continue finishing operations.

3. Without dislodging aggregate, remove excess mortar by lightly brushing surface with a stiff, nylon-bristle broom.

4. Fine-spray surface with water and brush. Repeat water flushing and brushing cycle until cement film is removed from aggregate surfaces to depth required.

3.9 STAMPING

Not Used

3.10 CURING

A. Concrete shall be kept continuously damp from time of placement until end of specified curing period or cured by other methods. Water shall not be added to surface during floating and troweling operations, and not earlier than 24 hours after concrete placement. Between finishing operations, surface shall be protected from rapid drying by a covering of waterproofing paper. Surface shall be damp when the covering is placed over it, and shall be kept damp by means of a fog spray of water, applied as often as necessary to prevent drying, but not sooner than 24 hours after placing concrete. None of the water so applied shall be troweled or floated into surface.

B. Concrete surfaces shall be cured by completely covering with curing paper or application of a curing compound.

1. Concrete cured using waterproof paper shall be completely covered with paper with seams lapped and sealed with tape. Concrete surface shall not be allowed to become moistened between 24 and 36 hours after placing concrete. During curing period surface shall be checked frequently, and sprayed with water as often as necessary to prevent drying, but not earlier than 24 hours after placing concrete.

2. Concrete cured with a curing compound shall have the compound applied at a rate of 200 square feet per gallon, in two applications perpendicular to each other.

3. Curing period shall be seven days minimum.

C. Only if additional protection is absolutely required, the surface should remain uncovered after the seven day period for at least 4 days, after which time new and unwrinkled non-staining reinforced waterproof Kraft curing paper may be used.

3.11 EXPANSION JOINTS

A. Expansion joints shall be 1/2 inch wide and located where shown on the Drawings. Expansion joints shall be troweled in the concrete to required width with preformed joint filler in place. Joint filler shall extend the full depth of the slab and full length of the expansion joint.

1. For concrete walks, pavements, and pads, depth of joint filler shall be placed to form a 1-1/4 inch deep recess for sealant and backer rod below finished concrete surface.

2. Use of multiple pieces to make up required depth and width of joint will not be permitted.

3.12 CONSTRUCTION JOINTS

A. Construction joints shall be placed whenever placing of concrete is suspended for more than 30 minutes.

1. Butt joint with dowels or thickened edge joint shall be used if construction joints occur at control joint locations.

2. Keyed joints with tiebars shall be used if the joint occurs at any other location.

3. Unless otherwise indicated on the Drawings, control joints shall be located 6 ft. o.c. maximum.

3.13 CONTROL JOINTS

A. Control joints shall be tooled into the concrete slab, with 3-inch wide border and troweled edges, in pattern as shown on the Drawings. If no pattern is shown**,** Joint shall be made after concrete is finished and when the surface is stiff enough to support the weight of workmen without damage to the slab, but before slab has achieved its final set.

B. Scoring shall cut into slab surface at least 1 inch, but in no case not less than 25 percent of slab depth.

3.14 COLD WEATHER CONCRETING

A. Materials for concrete shall be heated when concrete is mixed, placed, or cured when the mean daily temperature is below 40°F or is expected to fall to below 40°F within 72 hours. The concrete, after placing, shall be protected by covering, heat, or both.

B. Details of handling and protecting of concrete during freezing weather shall be subject to the approval and direction of the Engineer. Procedures shall be in accordance with provisions of ACI 306R.

3.15 HOT WEATHER CONCRETING

A. Concrete just placed shall be protected from the direct rays of the sun and the forms and reinforcement just prior to placing shall be sprinkled with cold water. Every effort shall be made to minimize delays which will result in excessive mixing of the concrete after arrival on the site.

F. During periods of excessively hot weather (95°F., or above), ingredients in the concrete shall be cooled with cold mixing water to maintain the temperature of the concrete at permissible levels in accordance with the provisions of ACI 305. Any concrete with a temperature above 95°F., when ready for placement, will be rejected.

G. Temperature records shall be maintained throughout the period of hot weather giving air temperature, general weather conditions (calm, windy, clear, cloudy, etc.) and relative humidity. Records shall include checks on temperature of concrete as delivered and after placing in forms. Data should be correlated with the progress of the work so that conditions surrounding the construction of any part of the structure

3.16 PROTECTION OF CONCRETE SURFACES

A. Concrete surfaces shall be protected from traffic or damage until surfaces have hardened sufficiently.

PART 4 – MEASUREMENT AND PAYMENT

4.1 METHOD OF MEASUREMENT

A. Site Cast-In-Place Concrete generally including, but not limited to, surface preparation, concrete, jointing and finishing for subsequent use in the work, acceptably performed and completed including all materials, equipment, labor and incidentals, in accordance with this SECTION, as shown in the drawings, and as directed by the Owner's representative shall be measured PER CUBIC YARD as indicated in Section 004100, FORM OF GENERAL BID.

4.2 BASIS OF PAYMENT

A. Site Cast-In-Place Concrete will generally include but is not limited to the surface preparation, concrete, jointing and finishing for subsequent use in the work as described in this SECTION and in the drawings, including all materials, equipment, labor, and incidentals, as described in this SECTION, as shown in the drawings, and as directed by the Owner's representative shall be paid PER CUBIC YARD as indicated in Section 004100, FORM OF GENERAL BID and shall be in accordance with Section 012000 MEASUREMENT and PAYMENT.

B. Furnishing and installing Site Cast-In-Place Concrete as identified in this SECTION and the Drawings is NOT included in the PER CUBIC YARD price for light pole foundations, and will be measured separately in accordance with Section 337173 ELECTRICAL WORK.

4.3 PAYMENT ITEMS

Item 32 16 40 SITE CAST-IN-PLACE CUBIC YARD

END SECTION 321640

SECTION 323190 METAL EDGING FOR LANDSCAPE BEDS

PART 1 - GENERAL

1.1 GENERAL PROVISIONS

A. Attention is directed to the CONTRACT AND GENERAL CONDITIONS and all Sections within DIVISION 01 - GENERAL REQUIREMENTS which are hereby made a part of this Section of the Specifications.

1.2 DESCRIPTION OF WORK

A. Work Included: Provide labor, materials and equipment necessary to complete the work of this Section, including but not limited to the following:

1. Metal edging

1.3 SUBMITTALS

A. Product Data: Provide manufacturer's data for each item showing installation and limitations in use.

B. Shop Drawings: Supply shop drawings at an approved scale for location, installation and erection of all parts of the work.

C. Material Selection and Samples: Submit minimum 6" long samples showing the range of colors available for all components required for construction.

1.4 QUALITY ASSURANCE

A. The Contractor and his Subcontractors shall inspect all subbases for unstable, unsuitable or improperly prepared areas. Do not begin work over unacceptable areas. Beginning work means the Contractor and his Subcontractors accept the subbase, previous work and conditions and shall be held responsible for any corrections required to properly implement the Construction Documents.

B. Source: For each type of product required for the work of this Section, provide products of one manufacturer and source for consistency.

C. Qualifications of Workers: Use adequate numbers of skilled workers who are trained in the necessary crafts and who are completely familiar with the specified requirements and methods needed for proper performance of the work of this Section.

D. The work of this Section shall be completely coordinated with the work of other Sections. Verify dimensions and work of other trades which adjoin materials of this Section before installing items specified.

PART 2 - PRODUCTS

2.1 STEEL EDGING

A. Edging material to be manufactured from steel with interlocking system at joints that are securely fastened with stakes.

B. Edging shall be 3/16" thick and 4" high; the finish shall be powder coated enamel in black unless otherwise indicated.

C. Stakes shall be steel and minimum 15" long.

2.2 MANUFACTURER

A. Available Products and Manufacturers: Subject to compliance with requirements, products that may be incorporated into the Work include, but are not limited to, the following:

1. Sure-loc Edging Corporation, Holland MI; www.surelocedge.com

2. COL-MET, Garland TX; www.colmet.com

PART 3 - EXECUTION

3.1 METAL EDGING

A. Check to ensure that all underground lines, irrigation hoses and cables are installed below the maximum depth of the stakes and edging.

B. Cut the trench for the edging so that the top of edging shall be at or 2" below finish grade as shown on the plans.

C. Install edging with stakes on the inside of plant bed edges and rain gardens, or on the outside of gravel filter strips and river rock accent paving strips.

D. Backfill both sides of the edging during installation.

PART 4 – MEASUREMENT AND PAYMENT

4.1 METHOD OF MEASUREMENT

A. Metal Edging shall be measured PER LUMP SUM for materials, equipment, labor, and incidentals to provide metal edging along plant beds, rain gardens, river rock paving accents, and/or gravel strips in accordance with this Specification and as shown in the drawings, and as directed by the Owner's representative.

4.2 BASIS OF PAYMENT

A. Payment for Metal Edging will include furnishing and installing all materials complete in place, including but not limited to all incidentals, cleanup, and repair as described in this SECTION and in the Drawings.

4.3 PAYMENT ITEMS

Item 32 31 90	METAL EDGING FOR LANDSCAPE BEDS	LUMP SUM

END OF SECTION 323190

SECTION 323219 SITE WALLS

PART 1 - GENERAL

1.1 GENERAL PROVISIONS

A. Attention is directed to the CONTRACT AND GENERAL CONDITIONS and all Sections within GENERAL REQUIREMENTS which are hereby made a part of this Section of the Specifications.

1.2 DESCRIPTION OF WORK

A. Work Included: Provide labor, materials and equipment necessary to complete the work of this Section, including but not limited to the following:
   1. Stone walls and capstones.
   2. Stone pier and capstone, including American Legion Cornerstone to be obtained from the City of Quincy.
   3. Installation of Granite Quarry Blocks to be obtained from the City of Quincy.

1.3 RELATED SECTIONS

A. Irrigation
B. Electrical
C. Site Cast in Place Concrete
D. Cement Concrete Paving
E. Stone Paving
F. Metal Fabrications

1.4 SUBMITTALS

A. Samples: Provide five units of each type of exposed stone.

1.5 SAMPLE WALLS

A. Construct sample wall sections before start of any wall work. Sample panels shall exhibit proposed backup construction, brick masonry color range, texture, bond, fastening, jointing, and workmanship of both the vertical wall and the cap as required. Size of sample walls shall be a minimum 4 ft. high and a minimum length of 3 ft.

B. Sample wall sections shall be inspected by the Owner's Representative. If the wall section is not acceptable, construct additional wall sections at no cost to the Owner until an acceptable sample is constructed. Accepted sample shall become the standard for the entire job, and shall remain undisturbed until completion of all work.

1.6 TESTING AND INSPECTION

A. The Owner reserves the right to have tests made of mortar materials and mortar, at his option, as the job progresses. Tests will be performed by a recognized Testing Laboratory, selected by the Owner's Representative, with all costs paid by the Owner. The Contractor shall agree to abide by the results of the tests; he shall make all adjustments and changes to mortar and materials to meet the specification requirements at no additional cost to the Owner.

1.7 DELIVERY, STORAGE, AND HANDLING

A. Deliver manufactured products in manufacturer's original, unopened, and undamaged containers with labels intact and legible.

B. Store and handle manufactured products to prevent damage and deterioration.

1.8 PROJECT CONDITIONS

A. Protect stone as follows:
   1. At the end of each day's work, cover stone with nonstaining, waterproof covering.
   2. Protect partially finished work when not being worked on.
   3. Prevent staining of stone from mortar, grout, sealants, and other sources.
   4. Immediately remove such materials without damaging stone.
   5. Protect base of walls using coverings spread on ground and over wall surface.
   6. Protect sills, ledges, and other projections from mortar.

B. Weather: Perform cast-in-place concrete work when existing and forecasted weather conditions are within the limits established in Section M4 of MHD Specifications.

C. Cold-Weather Requirements for Exterior Stone Paving: Comply with ACI 530.1/ASCE 6/TMS 602.
   1. Remove ice or snow formed on stone and concrete bed by carefully applying heat until top surface is dry to touch.
   2. Remove stonework damaged by freezing conditions.
   3. Perform the following construction procedures while work is progressing:

Air Temperature	Procedures
40° - 32°F.	Heat sand to produce mortar temperature between 40° and 120°F.
32° - 25°F.	Heat sand to produce mortar temperature between 40° and 120°F. Maintain temperature of mortar on boards above freezing.
25° - 20°F.	Heat sand to produce mortar temperature between 40° and 120°F. Maintain temperature of mortar on boards above freezing. Use wind breaks when wind is in excess of 15 mph.
20°F - below.	Heat sand to produce mortar temperature between 40° and 120°F. Provide enclosures and auxiliary heat.

      a. Do not use frozen materials or materials mixed or coated with ice or frost. Do not lower freezing point of mortar by use of admixtures or antifreeze agents, and do not use calcium chloride in mortar or grout.
      b. Do not build on frozen work; remove and replace stonework damaged by heat or freezing.
   4. Protect partially completed stonework against weather when work is not in progress.
   5. Cold Weather Protection for Completed Stonework:

Mean Daily Air Temperatures	Procedures
40°- 32°F.	Protect stonework from rain or snow for at least 24 hours by covering with weather-resistant membrane.
32°- 25°F.	Completely cover stonework with weather-resistive membrane for at least 24 hours
25°- 20°F.	Completely cover stonework with insulating blankets or similar protection for at least 24 hours.
20°F. – below	Maintain stonework at temperature above 32°F. for 24 hours using enclosures and supplementary heat.

D. Hot-Weather Requirements for Exterior Stone Paving: ACI 530.1/ASCE 6/TMS 602.
   1. Protection: Cover work at the end of each day and whenever work is not in progress. Extend cover down both sides of walls at least 24 inches and hold securely in place.
   2. Staining: Prevent mortar from staining face of stone to be left exposed. Clean exposed stone surfaces immediately. Protect stone from splashed mud and other stains. Protect sills, ledges and projections from mortar droppings.

PART 2 - PRODUCTS

2.1 STONE WALLS

A. Stone shall be fieldstone, and consist of sound, durable stone free from cracks and other defects. Stone shall be similar in character to walls found locally. Stone shall comply with the Massachusetts State Specifications for Highways and Bridges section 690.40.

B. Ready mix concrete shall conform to ASTM C94, the batch plant shall be certified in compliance with the National Ready Mix Concrete Association standards. Concrete shall be 3,500 psi.

C. Portland Cement shall conform to ASTM C150, type as required. Use only one brand of cement throughout the project. Limit the temperature of the cement to one hundred forty (140F) degrees Fahrenheit when delivered to the batching plant.

D. Aggregates shall conform to ASTM C33. Provide aggregates with a long history of successful use in similar work and conditions. Grade fine aggregates from one quarter (¼") fines. Grade coarse aggregates from one quarter (¼") inch to size specified.

E. Water shall be clean, potable and free of all impurities that are detrimental to concrete.

F. Mortar shall comply with the Massachusetts State Specification for Highways and Bridges, Section M4.02.15.

G. Stone Accessories
   1. Setting Shims: Plastic or vulcanized neoprene.
   2. Setting Buttons: Resilient plastic buttons.
   3. Weep and Vent Tubes: Medium-density polyethylene tubing, 1/4-inch OD

2.2 GRANITE BLOCKS

A. Granite blocks shall be selected in coordination with Owner's Representative from City of Quincy's stockpile of reclaimed granite Quarry Block.
   1. Granite Blocks shall be selected for general uniformity of size and color.
   2. Blocks shall be selected to allow conformance to intended finish reveal height:
      a. 12-inch reveal at Hancock Street Traffic Barricade
      b. 18-inch reveal in Town Brook Open Space Parcels

B. Granite Cleaning Materials
   1. Granite cleaning materials: Acceptable materials include mild soap and water, non-acid type cleaners and stiff fiber brushes. Wire brushes and caustic cleaners are unacceptable. Provide one of the following:
      a. Sure Clean #600 Detergent manufactured by ProSoCo, Inc., Kansas City, KS
      b. #101 Masonry Restorer/Cleaner manufactured by Diedrich Chemicals and Restoration Technologies, Inc, 300 A East Oak Street, Oak Creek, WI 53154.

C. Concrete Foundation
   1. Concrete for backing up Granite Planter Curb and End Pieces: 4000 psi, 3/4 inch high early strength concrete comply with the requirements of Section M4 of the MassDOT Standard Specifications.

D. Gravel Subbase
   1. Gravel subbase: comply with the requirements of M1.03.0 Type b gravel borrow of the MassDOT Standard Specifications.

PART 3 – EXECUTION

3.1 STONE WALLS

A. Contractor shall excavate area to the lines and grades shown to provide proper footings for all concrete footings.

B. Contractor shall install stone work as indicated on the drawings. All joints shall be deep raked. Stone walls shall have a uniform appearance and cross sectional dimension. Mortar shall not be visible and give the appearance of a dry laid wall. At least one quarter (¼) of the stones shall be headers evenly distributed throughout the wall.

C. Cap stones shall be large enough to cover full wall depth (front to back) and be mortared from beneath. No mortar shall show at the top of the wall. Install wall cap as detailed.

D. Contractor shall coordinate with the City of Quincy to obtain access to the American Legion Cornerstone prior to construction start.
   1. Cornerstone shall remain stored and protected until Contractor has scheduled installation within stone pier.
   2. Contractor shall verify dimensions of cornerstone and make allowances for conduit and natural variations of existing materials when constructing stone pier.

E. Weep holes: provide fully open weep holes required to allow for a positive means of drainage.

3.2 GRANITE BLOCK

A. Individually set stonework:
   1. Clean stone before setting by thorough scrubbing clean water and Tampico fiber brushes only.
   2. Do not use granite with chips, cracks, voids, stains and other defects visible in finished work and structurally impair stone.
   3. Set stone in strict compliance with approved Shop Drawings and Installation Drawings. Provide anchors, supports, fasteners and attachments. Shim and adjust stone true to lines and grades with accurately aligned joints of uniform width. Unless indicated otherwise, joints shall be 3/8 inch wide. Direct bearing contact between granite pieces shall be prohibited.
   4. Set stone in compacted aggregate base. Exercise particular care to equalize bed and joint openings and eliminate need for redressing of exposed surfaces.
   5. Provide joints wherever granite abuts dissimilar material and at locations noted in drawings and approved by Owner's Representative. Extend joint filler full depth of joint and allow 1/2 inch minimum space at top for insertion of backer rod and sealant. Protect top edge of joint filler with metal cap or other temporary protection. Remove protection per manufacturer's recommendations.

B. Tolerances
   1. The following installed tolerances are allowable variations from locations and dimensions indicated by the Contract Documents and shall not be added to allowable tolerances indicated for other work.
      a. Allowable Variation from True Plumb, Level, Line: ±1/8" in 10 feet, % inch in 40 feet.
      b. Allowable Variation from True Plane of Adjacent Surfaces: ± 1/16 inch

C. Repair, Cleaning and Protection
   1. Remove and replace damaged work, providing new stone pieces to match as approved by
   2. Owner's Representative. Make new joints to match so there is no evidence of replacement.
   3. Clean exposed surfaces using clean water and soft brushes only, unless otherwise approved by Owner's Representative. Do not change stone finish. Remove and replace work that cannot be successfully cleaned.

4. Provide temporary protection to ensure work being without damage or deterioration at time of final acceptance. Remove protections and re-clean immediately before final inspection.

PART 4 – MEASUREMENT AND PAYMENT

4.1 METHOD OF MEASUREMENT

A. Item 321319-01 Stone Walls will be measured by the exposed SQUARE FACE FOOT for transportation, materials, equipment, labor, mock ups, coordination with City of Quincy for acquisition and transport of American Legion Cornerstone, coordination with other trades, and incidentals required to provide Stone Walls and all other incidentals required to furnish and install the Stone Walls in accordance with this Specification and as shown in the drawings, and as directed by the Owner's representative.

E. Item 321319-02 Granite Blocks (12" reveal) will be measured PER EACH for transportation, materials, equipment, labor, mock ups, coordination with City of Quincy for access to, acquisition and transport of stockpile of existing City of Quincy granite quarry block, and incidentals required to provide Granite Blocks (12" reveal) and all other incidentals required to furnish and install the Granite Blocks (12" reveal) in accordance with this Specification and as shown in the drawings, and as directed by the Owner's representative.

F. Item 321319-03 Granite Blocks (18" reveal) will be measured PER EACH for transportation, materials, equipment, labor, mock ups, coordination with City of Quincy for access to, acquisition and transport of stockpile of existing City of Quincy granite quarry block, and incidentals required to provide Granite Blocks (18" reveal) and all other incidentals required to furnish and install the Granite Blocks (18" reveal) in accordance with this Specification and as shown in the drawings, and as directed by the Owner's representative.

4.2 BASIS OF PAYMENT

A. Payment for all Items in Section 321319 will include furnishing and installing all materials complete in place, including but not limited to all stone, mortar, incidentals, transportation, City of Quincy coordination, mockups, cleanup, protection, and repair as described in this SECTION and in the Drawings.

4.3 PAYMENT ITEMS

Item 321319-01	STONE WALLS, PIER, AND CAPSTONES	SQUARE FACE FOOT (SFF)
Item 321319-02	GRANITE BLOCKS (12" REVEAL)	EACH
Item 321319-03	GRANITE BLOCKS (18" REVEAL)	EACH

END OF SECTION 32 32 19

INTENTIONALLY BLANK

SECTION 32 84 00 IRRIGATION

PART 1 – GENERAL

1.01 GENERAL PROVISIONS

A. Drawings General Provisions of Contract, including General and Supplementary Conditions and Division 01 Specification Sections apply to this Section.

1.02 SCOPE-OF WORK

A. The work of this Section consists of providing a fully operational irrigation system located on two parcels (Upper Parcel and Lower "Legend" Parcel) bisected by Mechanic Street off Revere Road included in the Contract Documents. The Contractor shall furnish all labor, materials, accessories, services and equipment necessary for the complete installation of the following items of Work, as shown on the Drawings and/or specified herein, including, but not limited to, the following:

1. Irrigation system, completely installed.

2. All necessary automatic controller, wiring, piping, joint restraints, grounding, line surge protectors, zone valves, drip-emitter lines, electric conduits with wires, sleeves, lateral lines, drip line headers, quick coupler valves, isolation valves, pipe drains and all appurtenances.

3. Point of Connection (POC), conform to 310 CMR Section 22.22, for irrigation system as located on the Upper Parcel and shown on Drawing Sheet No. L-5, Northwest corner side of Mechanic Street. Irrigation supply line two (2) inch is provided. Two-inch Copper Tubing terminated at the back of sidewalk to be extended to POC enclosure location at finish grade, as shown on Drawing L-5. Plumbing contractor to transition from two-inch copper tubing below ground to two-inch copper tubing above ground, pull permit and install water meter, backflow preventer, and isolation valves per 310 CMR Section 22.22.

4. Power for automatic controller delivered to POC and controller location by electrical contractor, (120VAC, and single phase.)

5. Install new controller (pedestal mounted). Install wireless rain sensor with new controller.

6. Locate proposed pipe/wire route with Landscape Architect and Irrigation Consultant for approval prior to any trenching or pipe pulling activity.

7. Shut-off valve, isolation valves and necessary enclosures.

8. Trenching and backfilling for the irrigation system, including piping and wiring through sleeves. Pipe pulling allowed where practical.

9. Testing, instruction, maintenance manual, inspection, co-ordination with landscape and site work, preparation of as constructed documents, clean up and disposal.

10. First seasonal winterization and subsequent spring start up with Owner's representative present, for each separate irrigation system.

11. As-Constructed, GPS based drawings of irrigation system.

B. The Drawings do not show all details of construction. The Contractor shall furnish and install materials necessary to complete the irrigation system in accordance with the best practice and to the full intent of the Drawings and Specification.

C. All necessary adjustments to avoid any obstacles in the field shall be made by the Contractor with the concurrence of the Landscape Architect and/or the Irrigation Consultant.

D. Trench excavation, backfilling and bedding materials, together with the testing of the complete installation shall be included in this work.

G. Intent of the Drawings and Specification are to complement each other. Furnish and install all parts required by the Drawings and omitted by the Specification, or vice versa, as though required by both. Should there appear to be discrepancies or questions of intent, the Contractor shall refer the matter to the Landscape Architect and/or the Irrigation Consultant for decisions and their interpretation shall be final and binding.

H. All parts necessary for the proper and complete execution of the work shall be done or furnished in a manner by corresponding with the rest of the work.

1.03 JOB CONDITIONS

A. General: The contractor shall visit and accept the site as he finds it, and shall inform themselves of the character and the type of site. The General Contractor and the Irrigation Contractor shall walk the site, with the Owner's Representative, Landscape Architect and the Irrigation Consultant prior to commencing work to review the full scope of the project.

B. Damage or loss to site improvements shall be at the risk of the Contractor from and after the date of Contract execution, and no such damage or loss shall relieve the Contractor from any obligation under the Contract.

C. Traffic: Conduct operations and installation of irrigation components to ensure minimum interference with the normal use of walkways, paths, public ways and other adjacent facilities.

D. Utilities: Maintain all utilities and keep utilities in service and protect from damage. Do not interrupt utilities serving areas without first obtaining permission from the Owner. Provide temporary services as required.

1.04 DESIGN AND LAYOUT

A. Prior to the installation of any section or unit of the irrigation system, check and verify the correlation between the ground measurements and the Drawings. Contractor shall notify the Landscape Architect and/or the Irrigation Consultant of any discrepancies of the Work affected. Notify the Owner before beginning work.

B. The layout of the irrigation system(s) shall follow the schematic design shown on the Drawings as closely as possible. The Contractor shall not make alterations or changes in layout without review and approval in writing by Landscape Architect, Irrigation Consultant and/or the Owner.

C. Location of all valves, emitter and piping shall be staked in the field by the Contractor prior to installation, reviewed and accepted by Landscape Architect and/or the Irrigation Consultant. Care must be provided to avoid damage to new trees or shrubs root systems, determine pipe route together with Landscape Architect and Irrigation Consultant. As-Constructed drawings and copy of Operation and Maintenance Manual shall be provided to Landscape Architect and Irrigation Consultant for review and

acceptance before issuing to the Landscape Architect and Irrigation Consultant for review and acceptance before issuing final version to the Owner at end of construction as a condition of acceptance. The irrigation system installation project is not considered complete or accepted until completion of said reviews and delivery to the Owner the final Operation and Maintenance Manual and as-constructed documents.

1.05 CONTRACTOR QUALIFICATIONS

A. INSTALLER: A firm that has at least three years experience in similar scaled projects with demonstrated use of drip irrigation systems. A firm that has installed at least two, similar scaled projects in the past three years, which meets the criterion required by this specification and which is acceptable to the Owner.

B. REFERENCES: The Contractor must supply a minimum of two references for irrigation improvements of this scale with their Bid, including names and phone numbers of the Owner, the type of equipment installed, including the manufacturer, size of piping installed, total acreage of project and/or total linear footage of piping on project, the year installed and whether the project was a new construction or existing landscape. In addition the firm must provide written proof of such claims in the form of as-constructed, as-built documents or other methods acceptable to the Owner. Such documentation must clearly show "acceptance" by the Owner of the services performed.

1.06 SUBMITTALS

A. Record drawings: Provide complete irrigation system Record Drawing, in accordance with Specification Section 013000, on reproducible base supplied by the Landscape Architect. Drawings shall call out materials, have a legend, numbered valves and show details of valve assemblies, swing joints, risers, valve boxes and typical trench section. Reference all valve boxes by distance from a minimum of three permanent points. During progress of work the contractor shall keep an up-to-date annotated irrigation drawing showing exact locations of the installed irrigation system. Field drawings shall form a basis for the Record Drawings of the irrigation system required for proper project close out. During progress of work the irrigation contractor Forman shall keep a daily field log, in writing, detailing extent and areas of that days' work, including quantities of install pipe, wire, valves, and drip lines. Keep field log available on site for review by the Landscape Architect and the Irrigation Consultant. Include a copy of the original daily field log in record drawings, operation and maintenance manual.

B. Submittals shall be made in compliance with the requirements of Section 013000- Submittals.

C. The Contractor shall provide the following samples, Shop Drawings and Submittals for review. The Contractor shall not begin Work until receiving review and acceptance, in writing, by the Landscape Architect and the Irrigation Consultant of all irrigation components. Contractor shall not order materials until review and acceptance of samples, certification, and test results. Delivered materials shall closely match the samples.

1. Submit manufacturer's product literature for the following items:

   a. All piping materials, drip-lines and emitters, joints and fittings, and accessories.
   b. Pipe supports.
   c. Gate valve, Solenoid valve, Quick Coupling valve, Air Relief valve, and Flushing valve.
   d. Valve Boxes or parts.
   e. Enclosures, two-wire cable, and grounding.
   f. Automatic Control System.
   g. Reduced Pressure Backflow Preventer, meter, valves and Enclosure

h. Forman's name and contact phone number. Forman must be on site during any irrigation installation work.

2. Submit shop drawings of the following items:

a. Half scale irrigation system layout and specifications.
b. Connection to electrical and water system(s).
c. Specifications and Drawing number, revision number and date.

D. The Contractor shall keep a current and continuous record of all changes that may occur and shall deliver a clear and legible set of record drawings to the Landscape Architect prior to final acceptance of the work. These drawings shall show dimensional locations and grades of buried pipes and valves, notations in routing of the pipe, etc. All measurements shall be taken from permanent above grade points. All information on the prints shall be transferred to reproducible transparencies and given to the Owner at the completion of the Contract. Prior to acceptance; the following data complete and at one time, shall be submitted to the Landscape Architect and the Irrigation Consultant, for review, in accordance with Article 1.15 of this Section.

1. Three (3) copies of Operations and Maintenance Manual delivered upon acceptance of O&M manual, per Article 1.15 to the Landscape Architect.

2. Typewritten instructions for operation and maintenance of the complete system including bleed in for start-up blowout for winter and periodic adjustment and maintenance of the system.

1.07 COORDINATION

A. The Contractor shall be responsible for the proper execution of their work as shown on the Drawings and hereinafter described. It shall be the Contractor's responsibility to inspect all installation conditions and to report to the Owner any condition that may adversely affect their work.

B. Cooperation and coordination with all components of Landscape is required. The Contractor must coordinate all phases of sprinkler and drip irrigation installation to limit disruption and damage to the plant materials and other irrigation components.

C. Contractor shall provide name of the irrigation project Forman to the Landscape Architect and Irrigation Consultant. The irrigation Forman must be on site during all irrigation work. The Forman shall enter all data into the daily field log and the up-to-date annotated irrigation drawing. The irrigation installation firm must keep a true copy of the daily field log. The daily field log must be kept on site, in project trailer, for periodic review by the Owner, Landscape Architect or Irrigation Consultant. Include a copy of the daily field log in the O&M manual.

D. In case of a potable water line emergency during regular business hours, contact the Quincy Water Department. In case of a water line emergency during non-normal business hours, call the Quincy Police Department, and identify the situation specifically, as a water line emergency.

E. Install irrigation emitter and valve boxes only after finished grade approved. Do not work soil when frozen or excessively wet.

1.08 TESTING

A. Prior to the completion of the work, the Contractor shall cause the entire irrigation system to be tested in the presence of the Landscape Architect, the Irrigation Consultant, the Owner's Representative (notify the Landscape Architect, at least three business days in advance of the scheduled performance

test). The test shall clearly demonstrate that each and every part of the system functions as specified and intended. Landscape Architect and the Irrigation Consultant will determine if the water coverage is complete and adequate.

B. Drip lines shall be adjusted as required to provide complete and adequate coverage of the areas and plants to be irrigated.

C. Automatic features of the irrigation controller system shall be tested for satisfactory operation. The controller shall automatically operate each zone in the irrigation system for not less than five minutes or as requested by the Landscape Architect, during which time each remaining zones shall be added to the automatic cycle by means of manual control switches. If unsatisfactory performance of the controller develops, the condition shall be corrected and the testing procedures shall be repeated until satisfactory operation is obtained.

D. Test rain sensor for satisfactory operation and clearly demonstrate operation.

E. Due to construction duration of project, various sections of completed irrigation installation shall be subject to initial testing/punch list reviews.

1.09 CLEANING AND ADJUSTING

A. At the completion of the work, all parts of the installation shall be thoroughly cleaned. All equipment, pipe, valves and fittings shall be cleaned of grease, metal cuttings, PVC cement and sludge that may have accumulated by the operation of the system for testing. The Contractor shall legally dispose of all debris and waste material.

1.10 DEFINITIONS

A. The following related items are included herein and are defined:

1. MassDOT: "Standard Specifications for Highways and Bridges", Massachusetts Department of Transportation (formerly Massachusetts Highway Dept. and Massachusetts Department of Public Works), Commonwealth of Massachusetts, latest edition and all Supplements.

2. ASTM: American Society for Testing and Materials.

3. AASHTO: American Association of State Highway and Transportation Officials.

1.11 REFERENCE STANDARDS

A. Materials, equipment and installation shall conform to the following standards and codes and shall be so labeled or listed:

1. National Fire Protection Association (NFPA).
2. Underwriters Laboratories (UL).
3. National Electric Codes (NEC).
4. American Water Works Association (AWWA).
5. Federal, Commonwealth of Massachusetts Regulations (CMR), and/or Municipal Codes.
6. Public Safety Codes.
7. US. Public Health Service.
8. National Electric Manufacturers Association.
9. American National Standards Institute.

10. American Society of Mechanical Engineers (ASME).
11. Commercial standards.
12. Federal Specifications (FS).
13. Cast Iron Soil Pipe Institute.
14. National Sanitation Foundation.
15. Occupational Safety and Health Regulations (OSHA).
16. Irrigation Association.
17. American Society of Irrigation Consultants.

1.12 PROTECTION

A. The Contractor shall use extreme care in excavating so as not to damage or break any water, drainage, or other utility appurtenance. The Contractor shall immediately notify the Owner when existing water or drainage appurtenances are discovered to be broken or malfunctioning. The Contractor at no additional cost to the Owner shall replace water or drainage appurtenances that are damaged due to the Contractor's negligence, in kind. The Contractor at no additional cost to the Owner shall repair or replace trees or shrubs that are damaged due to the Contractor's negligence in kind.

B. It shall be the responsibility of the Contractor at the close of each day's work to block all open ends of installed water lines with an inflatable membrane or other type of plug, to prevent the introduction into the pipe of ground water, debris, animals, insects, and other contaminants.

C. Provide temporary storage of pipe and materials, in such a manner as to prevent damage and maintain them in "new' condition until incorporated into work. A storage location shall be arranged in advance with the Owner's representative. A secured storage shed/trailer is strongly recommended.

1.13 ORDINANCES AND PERMITS

A. The work under this section shall comply with all ordinances and regulations of authorities having jurisdiction.

B. The Contractor shall obtain all necessary permits and arrange for all mandatory inspections and bear the cost of it. Keep DIG SAFE number on file.

1.14 EXAMINATION OF CONDITIONS

A. The Contractor shall fully inform themselves of existing conditions of the site before submitting their bid, and shall be fully responsible for carrying out all work required to fully and properly executing the work of the Contract, regardless of the conditions encountered in the actual work.

B. No claim for extra compensation or extension of time allowed because of actual conditions inconsistent with those assumed, except those conditions described in the Contract Documents.

C. Verify water pressure at point-of-connection(s), before beginning any work and provide written notification of results to Landscape Architect and Irrigation Consultant.

1.15 OPERATION AND MAINTENANCE MANUAL INSTRUCTIONS

A. At a time designated by the Landscape Architect, the Contractor shall furnish the services of a competent operator to instruct the Owner in the maintenance and operations of irrigation system(s).

B. Upon completion of the installation phase of the work, furnish the Landscape Architect and Irrigation Consultant, for review and acceptance one (1) copy, for review, of an operation and maintenance manual containing copies of approved Shop Drawings and Details and typewritten instructions

specifically written for the project, relative to the care and operation of the equipment, all properly indexed and bound in a three-ring, hard-cover binder. The manual shall contain the following:

1. Table of Contents

2. Description of Irrigation System:

   a. Complete schematic drawing of all systems.
   b. Functional and sequential description of all systems.

3. Listing of manufacturers.

4. Manufacturer's data where multiple model, type and size listing are included shall clearly and conspicuously indicate those that are pertinent to this installation, as follows:

   a. Description: Literature, drawings, illustrations, certified performance charts, technical data, and related information.
   b. Operation.
   c. Maintenance, including complete troubleshooting charts start-up procedures and winterization methods.
   d. Parts list, including accepted submittals.
   e. As-constructed documents per Article 1.06.A, and a reproducible plan of each drawing (1"= 20' scale) on a 24" x 36" blueprint copy.
   f. Names, addresses and telephone number of recommended repairs and service - company.
   g. Guaranty data, including extended warranty of automatic controller system.
   h. Irrigation specification and daily field log.
   i. Copies of all permits pulled.
   j. Furnish a reduced copy of the as-constructed drawing laminated in plastic and mounted in proximity to the controller cover. Note the valve number on the drawing and include the same number on tag attached to valve or engrave on outside cover of valve box.

1.16 PROCEDURE

A. Notify all relevant municipal departments and public utility owners of the time and location of and work that may affect their facilities or operations. Cooperate and coordinate as necessary to protect all utilities. Contact DIG SAFE prior to any work.

B. Provide temporary storage of pipe and other materials, in such a manner as to prevent damage and maintain them in "new" condition until they are incorporated into the work, the storage location to be reviewed and approved by the Owner.

C. Provide temporary support, adequate protection and maintenance of all structures, drains, sewers and other obstructions encounted. Where grade or alignment is obstructed, the obstruction shall be permanently supported, relocated, removed or reconstructed as directed by the Owner.

D. The Landscape Architect and/or Irrigation Consultant shall confirm delivered material matches approved submitted materials. Use of a storage unit on site is strongly recommended to store confirmed materials.

1.17 RELATED DOCUMENTS

A. Other specification Sections which directly relate to the work of this Section include:

1. Section 312300 – Excavation and Fill
2. Section 312500 – Erosion Control
3. Section 321640 – Site Cast-in-Place Concrete
4. Section 329300 – Plants
5. Section 337173 – Electrical Work

PART 2 - PRODUCTS

2.01 GENERAL

A. All materials to be incorporated in this system shall be new and without flaws or defects and of quality and performance as specified and meeting the requirements of the system. All material overages at the completion of the installation are the property of the Contractor and are to be removed from the site.

B. Pipe sizes shall conform to those shown on the drawings. No substitutions of smaller pipe sizes will be permitted but the Irrigation Consultant may approve substitution of larger sizes. All pipe damaged or rejected because of defects shall be removed from the site at the time of said rejection.

2.02 GRAVEL FILL

A. Gravel fill shall be as specified in Section 312300, GRAVEL.

B. Use gravel as a base, in all valve access boxes including, but not limited to, electric valves, wire junctions, isolation valves, drains and enclosure foundations.

2.03 CONCRETE

A. Cast-in-place concrete base slab and footing shall have a 28-day compressive strength of 4,000 psi, three-quarter inch maximum size aggregate, air-entrapment of 5 to 7 percent, with a one inch to three inch slump as specified in Section 321640 - Site Cast-in-Place Concrete. Depths shall be as shown on the Drawings.

2.04 MANUAL VALVES

A. Curb Stops: Curb stops shall be of brass composition with drain and shall be Red Hed, Mueller ball valve, Cambridge Brass, or Ford. They shall be "T" head type. All brass material shall be ANSI/ NSF 61 (NO LEAD) compliant. The inlet and outlet shall have compression connections. Curb stops shall OPEN RIGHT.

B. GATE VALVES: Isolation gate valves for zone isolation (1", 1-1/4" and 1-1/2") shall be class 125 of bronze construction, screw-in bonnet, non-rising stem, solid wedge conforming to MSS SP-80, with bronze cross handle. Gate Valves manufactured by NIBCO, Model T-113-K, or approved equal.

1. Each zone will have a gate valve associated with the zone (size as herein noted) with zone for isolation and maintenance, place isolation valve in access box.

2.05 BACKFLOW PREVENTER (RPBFP), WATER METER and CROSS CONNECTION

A. Backflow preventer assembly shall be reduced pressure, consist of two in-line independent check valves, with an intermediate relief valve. All brass material shall be ANSI/NSF 61 (NO LEAD) compliant. Ball valve shut-off shall have a full port, quarter-turn operating capability. Backflow preventer shall be similar in design to Watts, Series 009, as approved by the Owner.

B. The backflow preventer located outside, shall be in an above grade enclosure, as required by the Owner and 310 CMR Section 22.22.

C. Enclosure shall be a flip top, foam insulated, and locking- box. Enclosure shall be made of fiberglass laminate with a non-corrosive gel coat surface. Enclosure shall have drainage outlets and reinforced mounting flanges.

1. Color shall be as selected by the Engineer during Submittal review.

2. Enclosure shall be a "Lok Box" with minimum dimensions of 47" inside length, 13" inside width, and 36" inside height. Enclosure shall be as manufactured by Hot Box or equal.

3. Enclosure requires a 6" thick concrete mounting pad that extends 9" beyond the enclosure.

D. Two-inch (2") pipe used for water services for underground installation to the backflow preventer assembly shall be copper Type K water tube seamless, drawn temper, almost pure copper material manufactured to the requirements of ASTM B 88 Standards, and AWWA C800 Standards. Tube shall be manufactured from copper alloy C12200 having a chemical composition of a minimum of 99.9% Copper (Cu) and Silver (Ag) combined and a maximum allowable range of Phosphorous (P) of 0.015 % - 0.040 %. The Seamless copper water tube of drawn temper is required to be identified with a green color stripe and the manufacturer's name or trademark.

E. Two-inch (2") bronze, standard port ball lave, ¼ Turn open /close operation, pressure rated 600 psi.

E. Meter shall conform to the City of Quincy Water Department's standards.

2.06 POLYETHYLENE PIPING

A. All piping for zone lines sized one and one-quarter (1-1/4) inches and smaller from the zone control valve to drip line headers shall be polyethylene, SIDR 11.5, pressure rated at 125 PSI, NSF approved, type PE 3408, extruded from virgin parent material. The pipe shall be homogeneous throughout and free from visible cracks, holes, foreign materials, blisters, deleterious, wrinkles and dents. All PE tubing shall meet ASTM D2239. Pipe sizes shall conform to those shown on the Drawings. No substitutions of smaller pipe sizes will be permitted, but Irrigation Consultant may approve substitution of larger pipe sizes. All pipe damaged or rejected because of defects shall be removed from the site at time of said rejection.

B. All insert fittings shall meet ASTM D2609. All insert fittings shall be PVC Type 1 Cell Classification 12454-B, fittings and shall be a type acceptable to the Owner. Use Type 304 stainless steel pipe clamps to connect polyethylene pipe to nylon fittings. Use double clamps each side of the fitting, as per Oetiker or equal. Contractor shall provide all proper male adapters 'x' insert fittings and PVC adapter 'x' insert fittings to complete the system.

2.07 POLYVINYL CHLORIDE (PVC) PIPING

A. All piping for main and zone lines sized 1-1/2 inches or larger from the zone control valve and all main lines shall be NSF approved, polyvinyl chloride (PVC), class 200, Type 1-1120, SDR 21, ASTM D1784, D2241, ridged PVC extruded from virgin materials. The pipe shall be homogeneous throughout and free from visible cracks, holes, foreign materials, blisters, deleterious, wrinkles and dents. Pipe sizes shall

conform to those shown on the Drawings. No substitutions of smaller pipe sizes will be permitted, but Irrigation Consultant may accept substitutions of larger pipe upon review. All pipe damaged or rejected because of defects shall be removed from the site at time of said rejection.

B. All PVC fittings shall be pressure rated, normal impact, and socket type conforming to SDR 21, pressure rated for 200 PSI and stamped with approval of NSF.

C. Use Pipe to Pipe Restraint for unstable soils, fill areas, and places where concrete thrust blocks are awkward. Pipe-to-Pipe Restraints shall meet the requirements of UNI-B-13-94. Grip ring serrations shall be machined. (Cast serrations are not permitted) Restraint rods, bolts and nuts shall be of low alloy steel to AWWA/ANSI C111/A21.11. Pipe-to-Pipe Restraints shall be as supplied by HARCO, part number 820 (size) or approved equal.

1. Use Pipe-to-Pipe Restraints on main line runs in unstable soils or fill areas with no thrust blocks.

2.08 BLOW OUT VALVE

A. Blow out valve shall be quick coupler valve, existing, located at the point of connection.

2.09 QUICK COUPLER VALVE AND COUPLERS

A. The valve body shall be of cast brass construction with a working pressure of 150 PSI. The valve seat disc plunger body shall be spring loaded so that the valve is normally closed under all conditions when the coupler is not inserted.

B. The couplers shall be housed in valve access boxes, as herein specified, for ease of use and locating. Provide rebar or approved equal to prevent twisting. Install QCV's on double PVC swing joints.

C. Quick coupling valves and couplers shall be Rain Bird #5, approved equal. Provide three (3) spare coupler keys with swivel hose elbows (SH-1).

2.11 AUTOMATIC IRRIGATION CONTROL SYSTEM

A. One 12-stations electromechanical Pedestal Mount Controller.

1. Three (3) to 30 minute station timing in standby program or manual mode.

2. 26.5 VAC output for operating up to six 7VA electric solenoid valves; visible fail-safe backup program.

B. Pedestal Waterproof Cabinet

1. Brushed stainless steel cabinet/pedestal housing.

2. Easy-access terminal strip.

3. Top access face panel.

4. Built-in valve output surge protection.

C. Install wireless rain sensor and incorporate into system.

2.12 WIRING FOR ELECTRIC VALVES

A. Common wire from Controller to solenoids shall Paige manufacture #14-1 AWG, solid copper. Power wires as noted below.

1. Color code and wire size as manufactured by Paige:

a. Common wire #14-1 single wire– white P/N 150050
b. All Zones, multi cable 18-13 – P/N 180091
c. Two spare wires each location – tan P/N 150120

B. In ground wire connectors shall be 3M DBY waterproof splice kits or equal. All wire splices shall be made in valve boxes or at valves.

2.13 ELECTRIC VALVES

A. The valves shall be Rain Bird PED-PRS-D Series, with Pressure Regulating Module, set as noted on Drawings.

B. Provide one (1) Rain Bird Model PHG, pressure hose gauge assembly.

C. Use one inch (1) valve for flow ≤ 20 GPM (Rain Bird #100-EFB-CP-PRS-D), one and one half inch (1 1/2) valve for flow ≥ 21 and 40 ≤ GPM (Rain Bird #150-EFB-CP-PRS-D).

2.14 VALVE ACCESS CONTROL BOXES

A. All electric remote control valve assemblies, isolation and drain valves shall be encased in plastic valve boxes. Valve box shall be injected molded and manufactured with a material composed of polyolefin with fibrous inorganic component reinforcing and ultraviolet stabilizer additives to assure resistance to material degradation from ultraviolet light.

B. Zone control valve boxes shall have a top opening of 20 inches by 14 inches and a depth of 18 inches. Cover shall be clearly marked "Irrigation Control Valve." The valve boxes shall be manufactured by Ametek, or approved equal.

C. House main line isolation valves and quick coupler valves in a minimum 10-inch round valve box, manufactured by Ametek, or approved equal.

D. Lid color code: Electric Valves (12”rectangle) green, quick coupler valves (10”round) black, drain valves (6” round) black and wire junctions (12” rectangle) tan.

2.15 AIR AND VACUUM RELEASE VALVES

A. Each drip irrigation zones shall have at high point Model AR Valve Kit, air/vacuum relief valve kit and one flush valve per drip zone. Install A/V valve and flush valves in subterranean emitter box Model SEB7XB. Locations determined in the field during installation and pipe layout.

1. The air valve shall be removed each autumn with the winterization service.

2. Location of valve shall be duly noted on the Record Drawings from GPS Mapping.

2.16 SLEEVES

A. All irrigation system pipe sleeves shall be sized as noted on the Drawings diameter. All sleeves that will be under roadways shall be at a minimum depth of four (4) feet or as approved by Authority. All sleeves

under roadways will be constructed of Schedule 80 PVC. All sleeves under walkways or walking or bike paths shall be Schedule 40 PVC and consistent with irrigation main line or lateral pipe depth. Provide sleeves with tight fitting end caps with opening to accommodate system piping and wire.

B. Sleeves shall be located as indicated on the Drawings. Irrigation main lines lateral piping and wire shall be installed within said sleeves at point of sleeve installation.

2.17 DRIP IRRIGATION

A. Rain Bird Landscape XF-SDI series drip line with Copper Shield Technology XFS-06-12 or equal @40 psig, spacing for rows typically 12 inches on-center.

B. Secure drip lines with metal hoops to hold drip line in-place. Straight runs one hoop per every five (5) feet, for loops one hoop for each 60 Degrees or 6 per loop on 3' loops for five (5) feet loops one hoop per 40 degrees or total of 9 hoops.

C. Limit any drip line run off headers to 300 feet maximum length. Set header location in field under site conditions.

2.18 POWER SURGE PROTECTION

A. Provide any and all factory recommended surge protection; follow manufacturer's recommendations for proper surge protection, new controller.

B. Insure electric circuit supplying power to the controller is on a dedicated circuit breaker. Protect circuit from incoming surges on the primary side a qualified electrician shall install a Z-2 Zap Trap (model ZAPTRAP 120volt, 1 Phase) as supplied by Tytewadd Power Filters, Springfield MO.

C. Coordinate with Electrical Contractor to ensure that Zap Trap installation completed prior to powering up system.

PART 3 – EXECUTION

3.01 GENERAL CONSTRUCTION METHODS

A. The irrigation system shall be installed as shown on the Drawings and in accordance with these specifications.

B. The workmanship shall be first class in every respect and neat in appearance. All work shall meet the requirements of the local codes and other authorities having jurisdiction over the work.

1. Where irrigation mains or laterals are installed through existing paved areas to remain, the sub-base, base and paving removed shall be replaced with material, which in the opinion of the Authority, is of equal quality.

2. Loam within the limits of trench excavation for irrigation mains and laterals shall be carefully removed to the lines and depths established by the Landscape Architect and stockpiled for subsequent replacement in the upper 12 inches from which it is excavated. Such removal and replacement of the quantities of loam shall be considered part of the work of this Section.

3. All excavation and backfill operations shall conform to the details shown on the Drawings and the applicable provisions specified.

4. Pipe shall be laid in trenches (polyethylene piping may be pulled is site conditions allow), to the proper lines and grades established and shall provide sufficient slope (minimum one percent) to drain the system for winterization. Prior to placing the pipe, the trench shall be graded and prepared to provide a firm and uniform bearing throughout the entire length of the pipe barrel. During backfill operations the pipe shall be rigidly supported so that no movement of or damage to the pipe or joints will result. Trenches for main lines shall be excavated to a minimum of 24 inches. Irrigation control wire, in conduit, shall be place to the same side of the mainline PVC pipe. The Contractor shall cover the PVC main line and irrigation control wire as herein specified and noted on the drawings and then lie into the trench at a subsurface depth of 16 inches yellow warning tape noting the existence of wire buried below. Lateral piping shall be installed to a depth of 12 inches, minimum.

5. All pipes shall be cut straight and true. After cutting, the ends shall be reamed out to the full inside diameter of the pipe.

6. The Contractor shall provide all copper adapters X insert and insert X PVC adapter fittings that may be required as well as other adapter fittings that may be required to complete the system.

7. Foreign material shall be prevented from entering the irrigation system during installation. Immediately prior to assembling, all pipes, valves and fittings shall be cleaned. All unattached ends of pipe, fittings and valves shall be plugged or capped pending attachment of additional pipe or fittings. All lines shall be thoroughly flushed out prior to attachment of terminal fittings.

8. Before any portion of the pipeline is backfilled (backfilling to secure the pipe from moving will be allowed, providing said backfill does not cover any fittings and/or joints), water shall be turned into that portion of the line and maintained at full pressure for a period of not less than one hour after all air has been expelled from the line. The Contractor shall repair leaks that develop in the installed system at no additional cost to the Owner. The pipe shall be plugged or capped where sprinklers are to be installed while making this test. The tests shall continue until the Owner approves the results.

9. Drain valves and gate valves shall be installed as and where shown on the Drawings or indicated in the specifications. Each drain valve shall be provided with a reach tube (two inches minimum diameter tube) with cover and each gate valve shall be provided with a valve box. All valves shall be installed in GRAVEL as required by the specification.

    a. Curb stops used as drain valves shall be installed in Gravel Sump of one cubic foot minimum.

    b. Install drain valves at location determined during construction, by the Landscape Architect and/or Irrigation Consultant. Connect one inch polyethylene pipe to one inch drain valve and run a minimum of five feet from PVC mainline to a one cubic foot gravel sump five inches below grade of PVC mainline or 25 inch minimum depth, for positive gravity drain. Record location of drain valves and gravel sumps on Record Documents.

    c. Install a drain at low side of each main line sleeve and vent as heretofore specified.

10. All wire required to connect the controller to the electric valves shall be installed in accordance with the manufacturer's specifications. Only waterproof wire connections shall be used.

C. Drawings are generally diagrammatic and indicative of work to be installed. Run and arrangement of piping shall be approximately as indicated, subject to modifications as required to suit conditions, to avoid interference with work of other trades, or for proper, convenient and accessible location of all parts of piping systems as determined by the Owner. Due to small scale of some Drawings all required offsets, fittings, valves, traps, drains, and other parts may not be indicated.

3.02 VALVES

A. Valves shall be installed as nearly as possible in the positions indicated on the Drawings consistent with the convenient of operating the hand wheel or wrench. All valves shall be carefully erected and supported in their respective positions free from all distortions and strain or appurtenances during handling and installation. All material shall be carefully inspected for defects in workmanship and materials, all debris and foreign material cleaned out of valve openings and seats, all operating mechanisms operated to check their proper functioning and all nuts and bolts checked for tightness. Valves that do not operate easily or are otherwise defective shall be replaced or repaired at the Contractor's expense.

B. Valves shall not be installed with stems below the vertical.

C. Valves shall be set plumb and supported adequately in conformity with instructions of the manufacturer.

D. Control valves in pipelines shall be installed in valve boxes extending from grade to valve body. If irrigation components cannot fit in one jumbo box, install as many access boxes as required to cover and gain access to all necessary irrigation components. Each valve box shall be located and labeled on Record Documents, by a minimum of three (3) fixed locations.

E. All zone control valves shall be installed with a minimum three feet of wire coil for expansion and future maintenance.

F. One cubic foot of Gravel shall be used as a sump at all valves.

3.03 PVC & POLYETHYLENE PIPING

A. Drawings are generally diagrammatic and indicative of work to be installed. Run and arrangement of piping shall be approximately as indicated, subject to modifications as required to suit conditions, to avoid interference with work of other trades, or for proper, convenient and accessible location of all parts of piping systems as determined by Landscape Architect and/or Irrigation Consultant. Due to the small scale of some Drawings, all required offsets, fittings, valves, drains and other parts, may not be indicated. Refer to and carefully check all Drawings and Details noting conflicts with work of other trades and arrange work accordingly, furnishing all offsets, fittings, valves, drains and other parts required to accommodate such conditions.

B. Pipe shall be laid in trenches (polyethylene piping may be pulled if site conditions allow), to the proper lines and grades established and shall provide sufficient slope (minimum one percent) to drain the system for winterization. Prior to placing the pipe, the trench shall be graded and prepared to provide a firm and uniform bearing throughout the entire length of the pipe barrel. During backfill operations the pipe shall be rigidly supported so that no movement of or damage to the pipe or joints will result. Trenches for main lines shall be excavated to a minimum of 24 inches. Irrigation control wire, in conduit shall be placed thru separate existing or new sleeves of the mainline PVC pipe. The Contractor shall cover the

PVC main line and irrigation control wire conduit with two inches of excavated soil and then lie into the trench at a subsurface depth of 16 inches yellow warning tape noting the existence of wire buried below. Lateral piping shall be installed to a depth of 12 inches minimum.

3.04 BLOW OUT VALVE

A. Use quick coupler valve at the locations shown on the Drawings.

3.05 QUICK COUPLING VALVES AND COUPLERS

A. Quick coupling valves and couplers shall be installed as indicated on the Drawings and as herein specified.

3.06 IRRIGATION CONTROLLER

A. The irrigation controller shall be installed in a NEMA 3R rated steel enclosure as indicated on the Drawing, in accordance with the manufacturer's recommendations and as herein specified.

B. Electrical power supply to the controller shall be made from the Lighting Load Center as shown on Electrical Layout Plan, and as specified in Section 337173 – Electrical Work.

3.07 WIRE

A. The irrigation control wire shall be installed in accordance with the manufacturer's recommendations and as herein specified within conduit as specified.

3.08 MISCELLANEOUS CONSTRUCTION

A. Manual drain valves shall be provided for the main pipe area and at one side of sleeves. The valves shall be protected by a valve cap and have access by a reach tube. A minimum of one cubic foot of Gravel shall be provided under each drain valve. These valves shall be located on the Record Documents.

B. The minimum depth of the irrigation piping shall be 22 inches to top of pipe for mainline, twelve inches for lateral lines, drip irrigation lines surface and covered.

C. Adjust zone pressure with pressure regulator on valve and PHG.

D. Thrust blocks shall be provided for PVC pipe at all bends tees and dead ends and shall bear on soil or ballast of sufficient stability to resist thrusts. Concrete for thrust blocks and structures shall conform to the requirements of this specification and the drawings.

F. The location of valves, piping and drip lines shall be staked by the Contractor and reviewed by Landscape Architect and/or Irrigation Consultant prior to installation.

The Contractor shall be responsible for the first shut down in the autumn, including blow-out, as well as the start-up in the following spring, including any pressure adjustments for new installation areas.

J. Final acceptance date determined by the Owner, by letter of formal acceptance written to the Contractor based on recommendations from the Landscape Architect and the Irrigation Consultant.

K. The Contractor shall repair any and all faults and defects in the plumbing and irrigation system due to defective or improper materials or workmanship that may appear within one year from the date of Final Acceptance. The Contractor shall make all changes within a one year period that are required to put the system proper condition and operation, without additional cost.

L. Within the one-year maintenance period if settlement occurs and adjustments in pipe, valves and sprinkler heads are necessary to bring the system to proper level of permanent grades, the Contractor shall make all adjustments without additional cost.

M. One year after Final Acceptance, at the end of the maintenance period, the Contractor shall leave the entire installation in complete working order, free from any and all defects in materials, workmanship or finish regardless of and discrepancies and/or omissions in Drawings or Specifications.

N. The Contractor shall be aware that other work in adjacent areas by other contractors under other contracts may be under construction at the same time as their Work. The Contractor shall make every effort to coordinate irrigation work with the ongoing adjacent work by others. When and where conflict is anticipated the Contractor shall notify the Owner of said conflict and shall cooperate with all parties to resolve said conflict.

O. In the event that earthwork, planting or irrigation work in adjacent areas by others is dependent upon the timely completion of the irrigation system, the Contractor shall schedule irrigation work in a manner compatible with the ongoing work by others. All Scheduling shall be coordinated with Landscape Architect and the Authority. The scope of work requires that the irrigation contractor shall be on-site during various phases of construction. Sleeves shall be installed, mainlines by the Contractor, as site condition progress through primary grades, lateral piping as vehicle barrier and curbing installation is ongoing or completed. Drip-line tubing can only be installed after plants are installed and before stone or bark mulch is installed. The Contractor shall recheck distribution tubing after mulching operations, or coordinate during this stage.

P. Prior to Final Acceptance, train appropriate personnel designated by the Owner in the system operating procedures. Training shall include full demonstrations of the system spring startup and autumn shutdown, including all required blow-outs of equipment, flushing, distribution adjustments, zone pressure adjustments and programming of irrigation control systems.

3.10 GUARANTY

A. The Contractor shall provide a written guarantee to make good any and all faults and defects in the plumbing and irrigation system due to defective or improper materials or workmanship that may appear within one-year from the date of Final Acceptance by the Owner and shall make all changes within the guaranty period that are required to put the system in proper condition and operation, without additional cost. Some items specified herein have extended warranties above the one-year period. The Contractor shall honor these extended warranties without additional cost.

3.11 CONSTRUCTION DOCUMENTS

A. The Contractor shall provide to the Owner all As-Constructed Documents called for and herein specified, including “As-Constructed" plans of the irrigation system on reproducible Mylar and electronic file.

B. The Contractor shall provide three (3) copies of the Operation and Maintenance Manual and As-Constructed Documents as herein specified.

3.12 MAINTENANCE

A. General

1. The Contract installer of the irrigation system and post construction, the Owner or Owner’s Representative must be cognizant of the following routine maintenance

practices. Adherence to these basic procedures can prevent avoidable damage to irrigation components, prevent over-watering or under-watering of plant materials and reduce water consumption. The following sections describe standard routine and simple owner maintenance practices. Irrigation System repairs that surpass these basic steps should be performed only by trained irrigation service personnel.

B. Normal Inspection Routine:

1. Daily: Standing water on level surfaces, holes or erosion. These signs may indicate a malfunction to the controller, a stuck electric valve, a leak or broken pipe.

2. Weekly: Operate the irrigation system on a short manual test cycle, observing each zone during operation. Visually inspect each drip line to determine proper mechanical operation or breaks in local piping. Walk the site and 'feel' for soggy or spongy ground as a sign of overwatering or isolated leak. Look for wilt conditions, observe health of plants, and remember too much water will kill plants promptly as not enough water.

3. Rain events: Automatic rain shut-off device should prevent irrigation during measurable rain. If irrigation cycle observed during of after a rain event, check rain level cut-off setting, insure it's functioning properly.

4. Verify operation of sensors and check filter disc of drip zones monthly.

C. Operational Strategies:

1. Seasonal adjustments: The controller schedule should be adjusted depending on several factors including; temperature, humidity, precipitation, sun exposure, soil type and plant variety. When the system is opened in the spring, set the controller for a frequency and duration that is compatible with ambient temperatures and precipitation. Verify operation of any rain shut-off or moisture sensing devices and set water budget/seasonal adjust (%) feature on controller to appropriately.

2. Monthly or when weather forecasts provide for long-term wet or dry periods. Adjust the seasonal adjust (%) control to reduce or add run times for the entire irrigation system. In the event that a cooler, rainy period is forecast, activate the rain delay function to postpone watering for duration.

3. Immediately after fertilizing or Integrated Pest Management (IMP) application on plant material, turn on the irrigation system for a manual cycle, to help water distribute chemicals so not to burn foliage. NOTE: some applications specifically prohibit the use of water for 24 -48 hours after application, carefully read instructions and proceed as directed, if so directed, shut-off irrigation controller by using rain delay feature.

4. Digging or excavating in the gardens: Be careful when digging in the gardens for planting new plants, weeding, cultivating, planting trees, edging gardens or installing new underground utilities or drainage. Always consult "as-constructed" documents and O&M manual.

D. Basic Care and Servicing:

1. Drip zones filters, replace yearly or as water condition requires to insure proper and unimpeded flow.

2. Occasionally debris may enter the pipe after hydrant flushing, or from a break in the pipes if cut accidentally. Untreated water also provides microorganisms that can produce an organic layer of the valve diaphragm over a period of several years. This 'slime' may cause the valve to malfunction, by preventing the valve from closing. The debris may take a while to reach the valve. A broken pipe may have let debris into the system, or grit may have entered the system when area hydrants were flushed. Nevertheless, the debris may become lodged between the valve diaphragm and valve seat or between the solenoid pin and its housing. This debris may take days, weeks or months to migrate to the affected valve. When this debris becomes lodged in the valve it prevents the valve from closing completely, resulting in leakage of water through the sprinklers in the affected zone. Sometimes the valve remains fully open with full sprinkler flow, other times the valve remains only partially open with a slow leak coming from the sprinklers. A repeated opening and closing of the valve can often remove the debris. Should this flushing procedure fail to stop the zone from malfunctioning, the manual gate valve should be shut down and the valve serviced. *Only personnel specifically trained on that particular valve model should service the valve.*

3. Controller malfunctions: The controller is quite reliable; however there are several events that may cause erratic operation.

   a. Change from daylight saving time: Unless the controller time is changed, the clock and start time will be off by one (1) hour from local time. Just reset the clock time.

   b. Unplugged or circuit turned off: Controllers have battery back up (rechargeable, built-in or alkaline) to retain clock time during power outages or when unplugged for a short time. The controller will show a clock time until the back-up battery drains, but will not operate the irrigation system. Check status of plug, circuit breaker, return power to controller, replace battery if needed and re-program.

   c. Routine maintenance during the Guarantee Period by the Contractor, and after Final Acceptance, by the Owner will extend the life of your irrigation system; trained irrigation service personnel should perform winterization and spring start-up procedures.

PART 4 – MEASUREMENT AND PAYMENT

4.01 METHOD OF MEASUREMENT

A. Irrigation will be measured PER LUMP SUM for irrigation system complete in place included in this SECTION and as shown in the Drawings.

4.02 BASIS OF PAYMENT

A. Payment for Irrigation will include furnishing and installing all materials complete in place, including but not limited to all incidentals, guarantees and warrantees for repair and/or replacement against defects, winterizing and spring start ups, and Irrigation Maintenance Instructions organized in a binder as described in this SECTION and in the Drawings.

4.03 PAYMENT ITEMS

Item 32 84 00 IRRIGATION LUMP SUM

END SECTION 32 84 00

SECTION 32 92 00 SOD LAWNS

PART 1 – GENERAL

1.1 GENERAL PROVISIONS

A. Attention is directed to the CONTRACT AND GENERAL CONDITIONS and all Sections within DIVISION 01 - GENERAL REQUIREMENTS which are hereby made a part of this Section of the Specifications.

1.2 DESCRIPTION OF WORK

A. Work Included: Provide labor, materials and equipment necessary to complete the work of this Section, including but not limited to the following:

1. Provide all topsoil required for work of this Section.
2. Screen stripped and stockpiled topsoil.
3. Provide additional new topsoil from off-site sources as required to complete work for this Section.
4. Provide all soil amendments, fertilizers, erosion controls, and mulches as required for work in this Section.
5. Scarify subsoil in preparation for loaming.
6. Spread and fine grade topsoil for all lawn areas.
7. Sod as required for work in this Section.
8. Provide maintenance and guarantee.

1.3 SUBMITTALS

A. Product Data: Provide manufacturer's data for each item showing installation and limitations in use.

B. Topsoil Analysis: Furnish soil analysis by a qualified soil-testing laboratory or a recognized commercial or governmental agency such as University of Massachusetts extension services.

1. Analysis shall state percentages of organic matter; gradation of sand, silt, and clay content; cation exchange capacity; deleterious material; pH; and mineral and plant-nutrient content of topsoil.
2. Report suitability of topsoil for lawn growth. State recommended quantities of nitrogen, phosphorus, and potash nutrients and soil amendments to be added to produce satisfactory topsoil.

C. Product Certificates: For soil amendments and fertilizers, signed by product manufacturer.

D. Qualification Data: For landscape Installer.

E. Material Test Reports: For existing surface soil and imported topsoil.

F. Planting Schedule: Indicating anticipated planting dates for each type of planting.

G. Maintenance Instructions: Provide recommended procedures to be established by Owner for maintenance of lawns during a calendar year. Submit before expiration of required maintenance periods.

1.4 QUALITY ASSURANCE

A. Source: For each type of product required for the work of this Section, provide products of one manufacturer and source for consistency.

B. Codes and Standards: work in compliance with applicable requirements of governing authorities having jurisdiction. Workmanship and finish shall be equal to the best practice of modern shops for each item of work.

C. Qualifications of Workers: Use adequate numbers of skilled workers who are trained in the necessary crafts and who are completely familiar with the specified requirements and methods needed for proper performance of the work of this Section.

D. Installer Qualifications: Employ a qualified landscape installer whose work has resulted in successful lawn establishment.

E. Installer's Field Supervision: Require Installer to maintain an experienced full-time supervisor on Project site when planting is in progress.

F. Soil-Testing Laboratory Qualifications: An independent laboratory, recognized by the State Department of Agriculture, with the experience and capability to conduct the testing indicated and that specializes in types of tests to be performed.

G. The work of this Section shall be completely coordinated with the work of other Sections. Verify dimensions and work of other trades that adjoin materials of this Section before installing items specified.

H. All sod and amendments shall comply with all Federal, State and local laws and regulations requiring inspection for plant disease and insect control.

I. Pre-installation Conference: Conduct conference at Project site to comply with requirements in Division 1.

1.5 PROJECT CONDITIONS

A. Protection: The Contractor shall use all means necessary to protect the materials of this Section before, during, and after installation. In the event of damage, make all repairs and replacements necessary to approval of the Owner's Representative and at no additional cost to the Owner. All work shall be executed in such a manner as to prevent any damage to existing streets, curbs, paving to remain, existing plant materials, and adjoining properties.

B. The Contractor shall remove all debris, construction equipment, and waste material from areas within the limit of work prior to inspection for acceptance.

C. Utilities: Determine location of underground utilities and perform work in a manner which will avoid possible damage. Hand excavate as required. Maintain grade stakes set by others until removal is mutually agreed upon by all parties concerned.

D. Excavation: When conditions detrimental to plant growth are encountered, such as rubble fill, adverse drainage conditions, or obstructions, notify Owner's Representative before spreading topsoil.

1.6 DELIVERY, STORAGE, AND HANDLING

A. All products and supplies shall be delivered to the job adequately protected from damage during transit.

B. All products and supplies shall be stored off the ground and shall be protected against damage. Damaged products and/or supplies will be rejected and shall not be employed in the work.

C. Deliver all items to the job site in their original containers with all labels intact and legible at time of Owner's Representative's inspection.

D. Immediately remove from the site all materials which do not comply with the specified requirements

E. Prior to the installation, cover and store all sod in a cool, dry shaded area.

F. Use all means necessary to protect fertilizers, amendments and other materials from moisture and other contaminants which may adversely affect their efficacy.

G. Sod: Harvest, deliver, store, and handle sod according to requirements in TPI's "Specifications for Turfgrass Sod Materials" and "Specifications for Turfgrass Sod Transplanting and Installation" in its "Guideline Specifications to Turfgrass Sodding."

1.7 SCHEDULING

A. Planting Restrictions: Coordinate planting periods with maintenance periods to provide required maintenance from date of Substantial Completion.

B. Sod may be placed from April 15th to November 1st as long as the ground is not frozen.

C. Weather Limitations: Proceed with planting only when existing and forecasted weather conditions permit.

1.8 LAWN MAINTENANCE

A. Begin maintenance immediately after each area is planted and continue until acceptable lawn is established, but for not less than the following periods:

1. The Contractor shall be responsible for maintenance to establish a uniform stand of the approved grasses until acceptance.
2. Mow lawn as soon as top growth is tall enough to cut. At the time of the first cutting, mow lawn with sharp mowing units not less than 2-1 /2 inches high. Lawn shall be maintained between 2-1/ 2 and 3-1 /2 inches high. Do not remove more than one third of the grass blade. All lawns shall receive a minimum of three mowings before Contractor's request for inspection and acceptance. Additional mowings may be required before acceptance.
   a. Do not delay mowing until grass blades bend over and become matted. Do not mow when grass is wet.
3. When full maintenance period has not elapsed before end of planting season, or if lawn is not fully established, continue maintenance during next planting season.

B. Maintain and establish lawn by watering, fertilizing, weeding, mowing, trimming, replanting, and other operations. Roll, regrade, and replant bare or eroded areas and remulch to produce a uniformly smooth lawn.

1. In areas where mulch has been disturbed by wind or maintenance operations, add new mulch. Anchor as required to prevent displacement.

C. Watering: Provide and maintain temporary piping, hoses, and lawn-watering equipment to convey water from sources and to keep lawn uniformly moist to a depth of 4 inches.

1. Schedule watering to prevent wilting, puddling, and erosion. Lay out temporary watering system to avoid walking over muddy or newly planted areas.
2. Water lawn at a rate sufficient to maintain a continuously moist condition.

D. Lawn Post-fertilization: Apply fertilizer after initial mowing and when grass is dry.

1. Use fertilizer that will provide actual nitrogen of at least 1 lb/1000 sq. ft. to lawn area.

PART 2 – PRODUCTS

2.1 LAWN PRODUCTS

A. Topsoil: ASTM D 5268, pH range of 5.5 to 7, a minimum of 4 percent organic material content; free of stones 1 inch or larger in any dimension and other extraneous materials harmful to plant growth.

1. Topsoil stockpiled from on-site stripping may be utilized if in compliance with the requirements for new topsoil.
2. All topsoil that was stripped and stockpiled shall be screened to a maximum stone size of 1/2 in.
3. The existing topsoil shall be tested by the Contractor, at the expense of the Owner, and the results of this test submitted to the Owner's Representative for review. The contractor is responsible for modifying the existing topsoil as required to meet the specification for new topsoil.

B. New Topsoil

1. New Topsoil: Shall be natural, fertile loam typical of cultivated topsoils of the locality, containing not less than 3.5% or more than 8% by weight, of decayed organic matter (humus) as determined by ASTM F-1647. If organic amendments are needed to obtain the specified matter content of the topsoil, the organic matter source may be a compost material. Compost shall be created in an in-vessel system, with an ash content not exceeding 40%.
2. Topsoil shall be taken from a well-drained, arable site, free of subsoil, large stones, earth clods, sticks, stumps, clay lumps, roots or other objectionable, extraneous matter or debris.
3. Topsoil shall be free of Quack-grass rhizomes, Agropyron Repens, and the nut-like tubers of Nutgrass, Cyperus Esculentus, and all other primary noxious weeds.
4. Topsoil shall have a pH not less than 6.0 or greater than 7.0.
5. Topsoil shall not be delivered or used while in a frozen or muddy condition.
6. Topsoil shall conform to the following particle size distribution, as determined by pipette method in compliance with ASTM F-1632:

Sand	40-60%
Silt	30-40%
Clay	5-20%

7. If determined by a soil test the existing topsoil that was stripped does not meet these specifications, the topsoil shall be amended to provide acceptable topsoil for use.

C. Soil Analyses

1. The Contractor shall submit representative samples of topsoil he intends to bring onto the site, and samples of topsoil that was stockpiled from on-site stripping, to a Soil Plant Testing Laboratory acceptable to the Owner's Representative. All reports shall be sent to the Owner's Representative for approval. The cost for testing and analysis of the soils shall be borne by the Contractor.
2. Samples of topsoil to be brought to the site must be approved prior to delivery. Deficiencies in the topsoil shall be corrected by the Contractor.
3. Testing reports shall include the following tests and recommendations:
   a. Mechanical gradation (sieve analysis) shall be performed and compared to the USDA Soil Classification System;
   b. The silt and clay content shall be determined by a Pipette Test of soil passing the No. 270 sieve;

c. Percent of organics shall be determined by an Ash Burn Test or Walkley/Black Test (ASTM F-1647);
d. Tests for gradation and organics shall be performed by a private testing laboratory approved by the Owner's Representative. Tests for soil chemistry and pH may be performed by a public extension service agency;
e. Chemical analysis shall be undertaken for Phosphorus, Potassium, Calcium, Aluminum, Soluble Salts, and acidity (pH);
f. Soil analysis tests shall include recommendations for soil additives to correct soils deficiencies as necessary, and for additives necessary to accomplish particular objectives noted;
g. All tests shall be performed in accordance with the current standards of the Association of Official Agriculture Chemists.

D. Soil Amendment (Washed Screened Sand)

1. Washed screened sand for use as a soil amendment to improve drainage properties and to reduce compaction of existing stripped topsoil or new topsoil, shall meet the following mechanical analysis:

Sieve Size	% Passing by Weight
4 in.	100
No.4	93
No. 8	83
No. 16	71
No. 30	49
No. 50	18
No. 100	2
No. 2000	2

E. Lime: ASTM C 602, agricultural limestone containing a minimum 80 percent calcium carbonate equivalent in the form of dolomitic limestone.

1. Lime shall be an approved agricultural limestone containing no less than fifty (50%) percent of total carbonates and twenty five (25%) percent total magnesium with a neutralizing value of at least one hundred (100%) percent;
2. The material shall be ground to such a fineness that forty (40%) percent will pass through a Number 100 U.S. Standard Sieve, and ninety eight (98%) percent will pass through a Number 20 U.S. Standard Sieve;
3. The lime shall be uniform in composition, dry and free flowing and shall be delivered to the site in the original, unopened containers, each bearing the manufacturer's guaranteed analysis;
4. Any lime which becomes caked or otherwise damaged, making it unsuitable for use, will be rejected.

F. Fertilizer

1. Type 1 Fertilizer: General starter fertilizer with a nutrient analysis 19-26-5, N-P-K. A minimum of 75% of the total nitrogen 19% is derived from urea and methylene ureas; a minimum of 25% from monoammonium phosphate. A minimum of 2.1% from water-insoluble methylene ureas; remaining 97.9% from water-soluble urea, slowly available methylene urea and monoammonium phosphate. Phosphorus (26%) from monoammonium phosphate; potash (5%) and sulfur as sulfate (1.8%) from potassium sulfate;
2. Type 2 Fertilizer: Fertilizer with pre-emergence weed control, containing active ingredient: siduron (3.1%). Analysis 16-21-4. A minimum of 75% of total nitrogen (16%) derived from urea and methylene ureas, with a minimum of 24.4% from monoammonium phosphate. A minimum of 22% is water insoluble nitrogen, with remaining 77.5% from urea, methylene urea and monoammonium phosphate. 21% phosphorous and 3% Potash;

3. Type 3 Fertilizer: All purpose fertilizer with a nutrient analysis of 36-3-7, N-P-K. A minimum of 30% of total nitrogen (36%) is from polymer-encapsulated sulfur-coated urea providing 21 percent slow release nitrogen. A minimum of 98.2% derived from coated and uncoated urea, and 1.8% from monoammonium phosphate. Phosphorus (3%) from monoammonium phosphate; potash (7%) from potassium chloride; sulfur (3.6%) from elemental sulfur;
4. Type 4 Fertilizer: Nutrient resource analysis of 32-3-10 N-P-K. A minimum of 97 percent of total nitrogen shall be derived from urea and methylene ureas. A minimum of 21 percent is from water-insoluble methylene ureas. Phosphorus - 3 percent shall be derived from monoammonium phosphate; potash 10 percent and sulfur as sulfate 3.5 percent from potassium sulfate.

G. Water

1. Water shall be supplied by the Owner unless otherwise specified.
2. The Contractor is responsible for providing all equipment, hoses, etc. for watering throughout the project and until final acceptance of lawn and turf areas by the Owner's Representative.

H. Herbicides, Pesticides and Fungicides

1. Herbicides, pesticides, and fungicides may be used subject to the approval of the Owner's Representative, and handled by State Licensed operators only.

I. Turfgrass Sod: Number 1 Quality/Premium, including limitations on thatch, weeds, diseases, nematodes, and insects, complying with TPI's "Specifications for Turfgrass Sod Materials" in its "Guideline Specifications to Turfgrass Sodding." Furnish viable sod of uniform density, color, and texture, strongly rooted, and capable of vigorous growth and development when planted.

1. Sod shall be good quality, free of weeds, disease and insects, and of good color and density. Sod shall be machine cut at a uniform soil thickness necessary for plant viability during the harvest-transport-installation cycle. Individual pieces of sod shall be cut to the suppliers' standard width and length. Maximum allowable deviation from standard widths and lengths shall be five (5%) percent. Standard size sections of sod shall be strong enough to support their own weight, and retain their size and shape when suspended vertically from a firm grasp on the upper ten (10%) percent of the section.
2. Sod grass mix shall consist of the following seed mixtures: fifty (50%) percent to be Kentucky Bluegrass and fifty (50%) percent Perennial Rye.
3. The sod shall be as grown by Tuckahoe Turf Farms, Inc., 1-800-556-6985; www.tuckahoeturf.com, Kingston Turf Farms, Inc., 401-789-0630; Gold Star Sod Farms, Inc., 800-648-8873; or other approved source.
4. Sod shall be machine cut at a uniform soil thickness of 3/4 in. plus or minus 1/4 in. at the time of cutting. Measurement for thickness shall exclude top growth and thatch. Individual pieces of sod shall be cut to the supplier's standard width and length. Maximum allowable deviation from standard widths and lengths shall be five (5%) percent. Broken pads and torn or uneven ends will not be acceptable. Sod shall be at least one (1) year old from time of original seeding.
5. Sod shall be furnished and installed in rectangular sod strips measuring 12 in. or 16 in. width and min. 4 ft. length, stored in rolls with the grass top side inverted so that the topsoil is to the exterior.
6. Stakes: Stakes for pegging the sod shall be sound hardwood approximately one inch by two inches (1"x 2") and of sufficient length to penetrate the mat, the seed bed and to a minimum depth of two (2") inches of subsoil. Stakes shall be free from insects and fungi and capable of remaining in the ground at least two (2) years.

PART 3 – EXECUTION

3.1 PREPARATION OF SUBSOIL

A. Prior to spreading topsoil, subsoil should be rough graded to correspond with finish grades as indicated on the Drawings. Sub-grade shall slope to allow for subsurface drainage. Depressions shall be filled, and areas that are highly compacted shall be loosened to a depth which is adequate for the passage of gravitational water through the subsoil.

B. After acceptance of subsoil grades, loosen and mix subgrade material 2 to 4 inches deep. Remove stones over 2 inches, sticks, rubbish, and other deleterious materials which may impede the healthy and vigorous growth of grass. Move no heavy objects or machinery, except as necessary for the spreading of topsoil, over sod beds after preparation of subgrade.

C. Subsoil which becomes compacted due to excessive construction activity shall be loosened as directed by the Owner's Representative at no additional cost to the Owner.

3.2 SPREADING OF TOPSOIL

A. Immediately after approval of subgrade, evenly spread and lightly compact approved topsoil to finish grades as indicated on the Drawings. Do not spread topsoil which is in a muddy or frozen condition. Handle no topsoil when dry or above the plastic limit. Install a minimum of six (6") inches of topsoil to lawn areas unless otherwise indicated on the Drawings.

B. When possible, spreading of topsoil shall be performed from the center of the lawn area to the perimeter. Contractor may use alternate spreading pattern as approved in writing by the Owner's Representative.

C. Caution should be exercised to minimize or eliminate travel over areas previously covered with topsoil. Topsoil which becomes compacted due to excessive construction activity shall be stripped and re-spread, or loosened as directed by the Owner's Representative at no additional cost to the Owner.

3.3 SOD BED PREPARATION

A. The minimum depth of topsoil in all lawn areas shall be 6 inches. Contractor is responsible for supplying all topsoil needed from off-site sources if stockpiles are inadequate.

B. Grade all lawn areas to finish grades as indicated on the Drawings. When no grades are shown, areas shall have a smooth and continuous grade between existing or fixed controls and elevations shown on plans. Roll, scarify, rake, and level as necessary to obtain true even lawn surfaces. All lawn areas shall slope to drain. Finish grades shall be approved by the Owner's Representative prior to commencing any sodding work. Install soil additive per manufacturer's instructions and as indicated on the Drawings.

C. Place soil amendment in the areas of the lawn areas as shown on the Drawings. Follow the manufacturer's recommendations for installation.

D. Spreading Limestone: Spread ground limestone evenly over the topsoiled surface. Incorporate limestone within the top 2 inches of soil prior to finish raking. Apply limestone at the rate recommended by the testing and analysis agency.

3.4 SODDING

A. Sod may be placed from April 15th to November 1st as long as the ground is not frozen.

B. Sod shall be harvested, delivered, and transplanted within a period of 36 hours.

C. Immediately prior to sodding operations, after all grading is complete and acceptable, the sod bed shall be lightly scratched with a fine toothed harrow or hand rake to provide a slightly roughened surface to accept the sodding application.

D. The soil on which the sod is laid shall be reasonably moist and shall be watered, if necessary. The sod shall be laid smoothly, edge to edge, and where continuous or solid sodding is called for on the plans sod shall be laid with the longest dimension parallel to the contours. Vertical joints between sods shall be staggered. Immediately after laying, sod shall be pressed firmly into contact with the sod bed by tamping, rolling, or by other approved methods so as to eliminate all air pockets, provide true and even surfaces, insure knitting and protect all exposed sod edges, but without displacement of the sod or deformation of the sod surface. Contractor will topdress newly sodded areas with approved screened topsoil to fill all voids.

E. In all swales, and on all slopes steeper than one on three and elsewhere as specified or as directed by the Owner's Representative, sods shall be held in place by stakes. Pegging shall be done immediately after tamping. At least one stake shall be driven through each strip of sod to be pegged and the stakes shall be not more than two feet apart. Stakes shall have their flat sides against the slope and be driven flush

F. Sod shall be watered during and immediately after installation to prevent drying. It shall then be thoroughly irrigated to a depth sufficient that the underside of the new sod pad, and soil immediately below the pad, are thoroughly wet. Contractor shall be responsible for having adequate water available at the site prior to and during the installation of all sod.

3.5 FERTILIZING

A. At the time of sodding, provide one application of the Type 1 fertilizer at the manufacturers recommended Normal Rate.

B. At the time of 4 weeks after sodding or as determined by the Owner's Representative , provide one application of the Type 2 fertilizer at the manufacturers recommended normal rate

C. If sodding occurs during the fall season, this step is not required at that time. However, this step will be required in early spring April 1 - May 1, if sodding has occurred in the fall. If sodding has occurred during the spring then at the time of 8 to 10 weeks after sodding or as determined by the Owner's Representative, provide soil tests at all general lawn areas, and submit the soil analysis to the Owner's Representative for review. If the soil analysis shows nutrient deficiencies, provide fertilizer amendments as necessary and described by the Owner's Representative, to balance those deficiencies.

D. If sodding occurs during the spring planting season, provide one application of the Type 3 fertilizer at a time of 12 to 14 weeks after sodding. If sodding occurs during the fall season, provide one application of the Type 3 fertilizer at a time during the following summer months June 15-August 1, or as determined by the Owner's Representative.

E. If sodding occurs during the spring or fall seasons, provide one application of the Type 4 fertilizer at a time of July 15 - August 15, or as determined by the Owner's Representative. Follow the manufacturer's instructions for application techniques. Apply at the manufacturer's recommended normal rate.

3.6 LAWN MAINTENANCE

A. Maintenance of the grass areas shall begin immediately, and generally consist of watering, weeding, mowing and edging, replacement of dead sod, disease and insect pest control, repair of all erosion, and any other procedure consistent with good horticultural practice, necessary to insure normal, vigorous and healthy growth.

B. Maintenance shall also include filling, re-grading, and re-sodding as necessary to correct depressions caused by settling, subsidence, or other physical or mechanical damage.

C. Maintenance shall also include all temporary protection fences, barriers, signs, and all other work incidental to proper maintenance.

D. The Contractor shall be responsible for maintenance to establish a uniform stand of the approved grasses until acceptance. After the grass has started, all areas and parts of areas showing poor germination or growth shall be re-sodded, repeatedly, until all areas are covered with a satisfactory growth of grass. At the time of the first cutting, mow lawn with sharp mowing units not less than 2-1 /2 inches high. Lawn shall be maintained between 2-1 /2 and 3-1 /2 inches high. Do not remove more than one third of the grass blade. All lawns shall receive a minimum of three mowings before Contractor's request for inspection and acceptance. Additional mowings may be required before acceptance.

E. Watering: The Contractor shall include cost for daily, and if necessary, continuous watering of all grass areas during a normal 8 hour working day. The sod bed shall be maintained in a continuous moist condition, satisfactory for good germination and growth of grass, as specified. Sodded grass areas must be kept in a moist condition until acceptance.

F. Full and complete written instructions for maintenance of the lawn areas are to be furnished to the Owner, by the Contractor at least ten days prior to the end of the contractual maintenance period, to familiarize him with the maintenance requirements for proper care and development of the lawns.

3.7 INSPECTION AND ACCEPTANCE

A. The Owner's Representative shall inspect the lawns upon written request by the Contractor. The request shall be received at least ten days before the anticipated date of inspection.

B. Final acceptance will not be granted until all sodded areas are in satisfactory condition

C. If the grass is in satisfactory condition, the Contractor's care and maintenance responsibilities will end. If the grass stand is unsatisfactory, the Contractor's maintenance responsibility shall continue, including a normal program of mowing, irrigation, re-sodding, fertilization, and repair until an acceptable stand of grass is achieved.

3.8 CLEAN UP

A. Absolutely no debris may be left on the site. Excavated material shall be removed as directed. Repair any damage to site or structures to restore them to their original condition, as directed by the Owner's Representative, at no cost to the Owner.

PART 4 – MEASUREMENT AND PAYMENT

4.1 METHOD OF MEASUREMENT

A. Sod Lawns will be measured PER LUMP SUM for furnishing and installation of materials, equipment, labor, and incidentals to provide soils/planting media, testing, soil amendments, sod, watering, maintenance, disposal of unsuitable soils, and all other incidentals required for furnishing and installing the sod lawns in accordance with this Specification and as shown in the drawings, and as directed by the Owner's representative. Payment will not be approved until satisfactory completion of the Maintenance Period.

4.2 BASIS OF PAYMENT

A. Payment for Sod Lawns will include furnishing and installing all materials complete in place, including but not limited to all incidentals, guarantees and warrantees, and specified maintenance as described in this SECTION and in the Drawings.

4.3 PAYMENT ITEMS

Item 32 92 00 SOD LAWNS LUMP SUM

END OF SECTION 329200

SECTION 329300 PLANTS

PART 1 – GENERAL

1.1 GENERAL PROVISIONS

A. Attention is directed to the CONTRACT AND GENERAL CONDITIONS and all Sections within DIVISION 01 - GENERAL REQUIREMENTS which are hereby made a part of this Section of the Specifications.

1.2 DESCRIPTION OF WORK

A. Work Included: Provide labor, materials and equipment necessary to complete the work of this Section, including but not limited to the following:

1. Planting of trees, shrubs, vines and groundcovers.
2. Maintenance and guarantee.

1.3 SUBMITTALS

A. Submit manufacturer's product data for the following:

1. Soil analysis results;
2. List of nurseries for selection of plant materials by Owner's Representative;
3. Manufacturer's certificate of compliance for controlled release fertilizer issued by the manufacturer only, showing quantity of material ordered and specific job application;
4. For all plant materials not selected in the field by the Owner's Representative, submit a complete list showing each type, each source of materials, the measured size of each, as well as photographs of materials, with scale figure.

1.4 QUALITY ASSURANCE

A. Source: For each type of product required for the work of this Section, provide products of one manufacturer and source for consistency.

B. Codes and Standards: work in compliance with applicable requirements of governing authorities having jurisdiction. Workmanship and finish shall be equal to the best practice of modern shops for each item of work.

C. Qualifications of Workers: Use adequate numbers of skilled workers who are trained in the necessary crafts and who are completely familiar with the specified requirements and methods needed for proper performance of the work of this Section.

D. The work of this Section shall be completely coordinated with the work of other Sections. Verify dimensions and work of other trades that adjoin materials of this Section before installing items specified.

E. All plant materials shall be true to name according to "Standardized Plant Names," published by the American Joint Committee on Horticulture Nomenclature, 1942 edition. Each plant or bundle shall be tagged with the name and size of plants in accordance with the American Nursery & Landscape Association (ANLA), American Standard for Nursery Stock, ANSI Z60.1. In all cases, botanical names shall take precedence over common names.

F. Quality and size shall conform to the current edition of "Horticultural Standards" for number one grade nursery stock as adopted by American Nursery & Landscape Association (ANLA).

G. All plants and plant materials shall comply with all Federal, State and local laws and regulations requiring inspection for plant disease and insect control.

1.5 PROJECT CONDITIONS

A. Protection: The Contractor shall use all means necessary to protect the materials of this Section before, during, and after installation. In the event of damage, make all repairs and replacements necessary to approval of the Owner's Representative and at no additional cost to the Owner. All work shall be executed in such a manner as to prevent any damage to existing streets, curbs, paving to remain, existing plant materials, and adjoining properties.

B. The Contractor shall remove all debris, construction equipment, and waste material from areas within the limit of work prior to inspection for acceptance.

C. Utilities: Determine location of underground utilities and perform work in a manner which will avoid possible damage. Hand excavate as required. Maintain grade stakes set by others until removal is mutually agreed upon by all parties concerned.

D. Excavation: When conditions detrimental to plant growth are encountered, such as rubble fill, adverse drainage conditions, or obstructions, notify Owner's Representative before planting.

1.6 DELIVERY, STORAGE, AND HANDLING

A. All products and supplies shall be delivered to the job adequately protected from damage during transit.

B. All products and supplies shall be stored off the ground and shall be protected against damage. Damaged products and/or supplies will be rejected and shall not be employed in the work.

C. Deliver all items to the job site in their original containers with all labels intact and legible at time of Owner's Representative's inspection.

D. Immediately remove from the site all plants which are not true to name, and all materials which do not comply with the specified requirements.

E. Use all means necessary to protect plant materials before, during, and after installation and to protect the work and materials of all other trades.

F. Replacements: in the event of damage, immediately make all replacements necessary to the approval of the Owner's Representative and at no additional cost to the Owner.

PART 2 – PRODUCTS

2.1 GENERAL

A. Loam/Topsoil: friable, typical of local cultivated topsoil containing 5% (min.) decayed organic matter (humus), no toxic materials, from well drained, arable site, reasonably free of subsoil, stones, earth, clods, sticks, roots or debris.

1. Test for acidity, fertility, and general texture by a recognized commercial or government agency; report findings and recommendations to the Owner's Representative. Add soil conditioners as per testing agency's report and recommendations.
2. Deliver no topsoil in frozen or muddy condition.

B. Superphosphate: finely ground phosphate rock with eighteen percent (18%) minimum available phosphoric acid.

C. Bone Meal: commercial raw bone meal, finely ground, 1% nitrogen and 18% phosphorus acid (min.).

D. Manure: well rotted, unleached, cattle manure, reasonably free of wood shavings, sawdust or other litter and no chemicals or other ingredients harmful to plants. Dehydrated manure (Bovung or equal) is acceptable.

E. Fertilizer: Fertilizer for lawns shall be chosen based on the results of soil tests performed as part of the requirements of this specification. All existing site loam and new topsoil brought to the site shall be tested.
1. Recommendations for amendments shall be made by the testing agency or other qualified soils engineers. The recommendations and product submittals shall be forwarded to the Owner's Representative for approval.

F. Compost - shall be a well-decomposed, stable, weed free organic matter source. It shall be derived from agricultural, food, or industrial residuals; biosolids (treated sewage sludge); or yard trimmings.
1. Mix shall meet all state environmental agency requirements.
2. The product shall contain no substances toxic to plants, will possess no objectionable odors, and shall not resemble the raw material from which it was derived.
3. For acid loving plants, only use compost that has not received the addition of liming agents or ash by-products.
4. Compost shall meet the following:

Parameters	Range
Ph	5.5 - 8.0
Moisture content	35% - 55%
Soluble salts	< 4.0 mmhos (ds)
C:n ratio	15 – 30:1
Particle size	< 3/4"
Organic matter content	> 20%
Bulk density	< 1200 lbs. Per cubic yard
Foreign matter	< 1% (dry weight)

G. Lime: ground, dolomite limestone, 95% passing 100 mesh screen.

H. Planting mixture: topsoil thoroughly incorporated with well rotted manure or equivalent dehydrated manure or bone meal and peat proportioned 1 cubic yard to 7 cubic yards topsoil.

I. Mulch: aged pine bark consisting of the outer bark of pine trees with minimum hardwood bark; Bark shall be thoroughly mixed and aged in stock piles a minimum of 6 months, partially decomposed, dark brown in color, and generally free of chunks of wood thicker than 1/4". Aged pine bark containing an excess of fine particles will not be acceptable.

J. Water: Contractor shall furnish hose and connections required for watering all plant materials until completion of the project.

K. Tree Staking - Hardwood Stake - for tree guying - 30" long (min.). For tree staking - 8' long (min.). Install as detailed on the Drawings, where required by site conditions.

L. Wire - pliable No. 12 to 14 gauge galvanized soft steel wire with rubber hose or Chain Lock brand plastic tree tie or approved equivalent, where required by site conditions.

M. Wrapping material - first quality, heavy, waterproof crepe paper manufactured for this purpose; not less than 4" wide, where required by site conditions.

2.2 PLANT MATERIALS

A. Furnish and install all plants as per Drawings in quantities listed on plant materials list. If there is any discrepancy between quantities listed and shrubs shown, notify the Owner's Representative. Contractor shall be responsible for quantity of shrubs graphically shown on plans.

B. All plants shall be nursery grown unless authorized to be collected.

C. Plants: in accordance with USDA Standard for Nursery Stock, latest edition, hardy under climatic conditions similar to locality of project, typical of species or variety, normal habit of growth, sound, healthy, vigorous, well-branched, densely foliated when in leaf, free of disease, insect pests, eggs, or larvae, with well developed root systems.

D. If plants of specified kind or size are not available within a reasonable distance, substitutions may be made upon request, if approved by Owner's Representative.

E. Plant Dimensions: conform to USDA Standard for Nursery Stock, latest edition, as specified. Exceptions as follows:
   1. Plants larger than specified may be used if approved by Owner's Representative at no increase in contract price. Increase spread of roots or earth ball in proportion to size of plant.
   2. Undersize plants (10% max.) in any one variety or grade may be used if approved by the Owner's Representative. Provide sufficient plants above size to make average equal to or above specified grade. Undersize plants shall be larger than average size of next smaller grade.

F. Balled and Burlapped (B & B) plants: dig with firm natural earth roots. Made balls are unacceptable.
   1. Protect B & B plants not planted immediately upon delivery with soil, wet moss, or other acceptable material. Prevent voids among roots with careful filling. Bind no plants with wire or rope so as to damage bark or break branches.

G. Container grown plants: grown in container long enough for root system to have developed sufficiently to hold its soil together firm and whole. Plants loose in container will not be acceptable.

H. Plants are subject to inspection and approval at place of growth for conformity to specifications as to quality, size, and variety. The expenses incurred by the Owner's Representative for such inspections shall be born by the Contractor. Owner's Representative reserves right of inspection upon delivery at the site or during progress of work or right of rejection due to damage suffered in handling or transportation. Remove defective plants immediately from site. Plants to be accompanied by State Nursery inspection certification, if required.

PART 3 – EXECUTION

3.1 INSPECTION

A. Examine the areas and conditions under which work of this Section will be performed. Correct conditions detrimental to the proper and timely completion of the work. Do not proceed until unsatisfactory conditions have been corrected.

3.2 PLANTING OPERATIONS

A. Plant nursery stock immediately upon delivery to the site and approval by the Owner's Representative. Layout individual tree and shrub locations and areas for multiple plantings; Stake locations, outline plant beds, and obtain the Owner's Representative s approval before proceeding with planting work.

B. Planting may be done whenever weather and soil conditions are favorable or as otherwise authorized by Owner's Representative. If this is not feasible, heel-in material with damp soil or mulch to protect from sun and wind.

C. Notify Owner's Representative at least one week prior to beginning planting operations.

D. Excavate tree pits 2'-0" diameter (min.) and shrub pits 12" diameter (min.) greater than ball of earth or spread of roots and sufficiently deep to allow for 4" thick layer of compacted planting mixture beneath ball or roots.

E. Locate pits prepared and backfilled with planting mixture to grade prior to planting by staking and recording on plans for location when planting proceeds.

F. Set plants in center of pits, plumb and straight, with crown of plant 1" higher, after settlement, than surrounding finished grade.

G. When B & B trees are set, compact topsoil mixture around bases of balls to fill all voids. Remove burlap, ropes or wires from top one third (1/3) of balls before filling in with planting mixture.

H. Thoroughly compact planting mixture around roots or balls and water immediately after plant pit is backfilled. Form a shallow basin slightly larger than pit with a ridge of sod or mulch to facilitate and contain watering. Cultivate soil in shrub beds, rake smooth and neatly outline after planting. Provide 12" (min.) of loam between all shrubs and 6" (min.) between all ground covers.

I. Distribute controlled release fertilizer packets equidistant within the planting pit adjacent to the root ball but not in direct contact with the roots. Placement depth shall be 6 to 8 inches. Packets shall not be cut, ripped or damaged.

J. Application rates as follows:

Planting Item	Size	No. of Packets
Deciduous Trees:	1-3" cal.	3
	4-6" cal.	4
Shrubs:	2-3'	2
	over 3'	3
Evergreen Trees:	5-10'	4
	over 10'	5
Vines:	1 gal.	1
Groundcover:		1 packet per four plants

K. Stake or guy trees as detailed on the Drawings, only if necessary per site conditions, as directed by the Owner's Representative.

L. Prune each plant in accordance with ANLA standards to preserve natural character. Remove all dead wood, suckers, broken or badly bruised branches and approximately 1/4 of wood. Prune with clean, sharp tools.

M. Cover all tree and shrub pits immediately after planting with 3" (min.) layer of specified mulch. Limit of mulch for trees shall be area of pit; for shrubs in beds, entire area of shrub bed. Mulch shall be kept 2" clear of trunk.

N. Notify Owner's Representative immediately if rock or underground obstructions are encountered in plant pit excavation.

O. Contractor shall furnish plans showing locations of underground utilities encountered, as required.

3.3 MAINTENANCE – PLANTING

A. Maintenance shall begin immediately after each plant is planted and shall continue for a minimum of 90 days following final acceptance of all planting.

B. Maintenance shall consist of keeping the plants in a healthy growing condition and shall include but is not limited to watering, weeding, cultivating, re-mulching, tightening and repairing of guys, removal of dead material, resetting plants to proper grades or upright position, and maintaining the planting saucer.

C. Plants shall be inspected for watering needs at least twice each week and watered as necessary to promote plant growth and vitality.

D. Stakes shall be kept plumb and neat in appearance. Guys, wires, and anchoring cables shall be tightened and repaired weekly.

E. Planting beds and individual plant pits shall be kept free of weeds, and mulch shall be replaced as required to maintain the specified layer of mulch. Beds and individual pits shall be neat in appearance and maintained to the designed layout.

F. Plants that die during the maintenance period shall be removed and replaced at once, unless designated otherwise by the Owner's Representative.

G. Spraying for both insect pests and diseases shall be included during the maintenance period as required and as directed.

H. During the maintenance period, any decline in the condition of plantings shall require the Contractor to take immediate action to identify potential problems and undertake corrective measures. If requested by the Owner's Representative, the Contractor shall engage professional arborists and/or horticulturalists to inspect plant materials and to identify problems and recommend corrective procedures.

3.4 ACCEPTANCE STANDARDS FOR PLANTING

A. Following the completion of all planting, the Contractor shall request, from the Owner's Representative in writing, a formal inspection of the completed work. If plant materials and workmanship for the site are acceptable, written notice will be given to the Contractor stating that the work has received acceptance and that the 90 days maintenance and the one year guarantee period has commenced from the date of acceptance.

B. If a number of plants are sickly or dead at the time of inspection or if, in the Owner's Representative's opinion, workmanship is unacceptable, written notice will be given by the Owner's Representative to the Contractor in the form of a punch list, which itemizes necessary planting replacements and/or other deficiencies to be remedied. The Contractor's responsibility for maintenance of all the plants shall be extended until replacements are made or other deficiencies are corrected. All dead and unsatisfactory plants shall be removed promptly from the project. Replacements shall conform in all respects to the Specifications for new plants and shall be planted in the same manner.

3.5 GUARANTEE FOR PLANT MATERIALS

A. Plants shall be guaranteed for a period of one year after written notification of acceptance and shall be alive and in satisfactory growth at the end of the guarantee period.

B. At the end of the guarantee period, a final inspection will be held to determine whether any additional plant material replacements are required. Each plant shall show at least 75% healthy growth and shall have the natural character of its species as determined by the Owner's Representative. Plants found unacceptable shall be removed promptly from the site and be replaced during the normal planting season, until the plants live through one year.

C. Replacement plants shall have a one year guarantee from time of planting.

PART 4 – MEASUREMENT AND PAYMENT

4.1 METHOD OF MEASUREMENT

A. Plants will be measured PER LUMP SUM for furnishing and installation of materials, equipment, labor, and incidentals to provide plant pit excavation, soils/planting media, testing, soil amendments, plants, staking, wrapping and/or wiring as necessary, plant protection, aged pine bark mulch (including placement), watering, maintenance, pruning, disposal of unsuitable soils, and all other incidentals required for furnishing and installing the plantings in accordance with this Specification and as shown in the drawings, and as directed by the Owner's representative. Payment will not be approved until satisfactory completion of the Maintenance Period.

4.2 BASIS OF PAYMENT

A. Payment for Plants will include furnishing and installing all materials complete in place, including but not limited to all incidentals, guarantees and warrantees, and specified maintenance as described in this SECTION and in the Drawings.

4.3 PAYMENT ITEMS

Item 32 93 00 PLANTS LUMP SUM

END SECTION 329300

INTENTIONALLY BLANK

SECTION 334100 STORM UTILITY DRAINAGE PIPING

PART 1 – GENERAL

1.1 DESCRIPTION

A. This Section specifies requirements for furnishing and installing the site storm utility drainage piping system.

B. The work includes:

1. Site storm drainage system.

2. Site Underdrains

1.2 RELATED DOCUMENTS

A. Other specification Sections which directly relate to the work of this Section include:

1. Section 312300 – Excavation and Backfill

2. Section 312500 – Erosion Control

3. Section 321640 – Site Cast-in-Place Concrete

1.3 SUBMITTALS

A. Shop drawings

1. Materials list of items proposed for the work.

2. Shop drawings or descriptive literature, or both, showing dimensions, joint and other details of all materials proposed for the work. Shop drawings shall be submitted to the Engineer for approval prior to ordering material.

B. As-Built Drawings

1. Submit 4 copies of As-Built Drawings upon completion and acceptance of work.

2. As-Built Drawings shall be complete and shall indicate the true measurement and location, horizontal and vertical, of all new drainage system construction. As-Built drawings shall include a minimum of three ties showing the distance to each catch basin and manhole from fixed permanent objects. As-Built drawings shall also contain any additional information required by the municipality, and shall be stamped with the seal of a Licensed Land Surveyor and Licensed Professional Engineer.

1.4 COORDINATION AND VERIFICATION

A. Coordinate the work with the termination of storm drain connections at buildings, connections to municipal systems, and trenching operations.

B. The contractor shall field verify and survey the size, location and elevations of all existing pipe and utility lines prior to ordering of materials for this utility system. A report of the findings of the verification survey shall be submitted to the engineer for information and comment.

1.5 DELIVERY, STORAGE AND HANDLING

A. All materials shall be adequately protected from damage during transit. Pipes shall not be dropped.

B. All pipe and other appurtenances shall be inspected before placement in the work and any found to be defective from any cause, including damage caused by handling, and determined by the Engineer to be unrepairable, shall be replaced at no cost to the Owner.

C. Storage and handling of pipes and other system appurtenances shall be in accordance with the manufacturer's recommendations.

1.6 INSPECTION

A. The manufacturer/supplier is responsible for the provision of all test requirements specified for each type of pipe. In addition, any pipe may be inspected at the plant for compliance with these specifications by an independent testing laboratory selected and paid by the Owner. The Contractor shall require the manufacturer's cooperation in these inspections.

B. Inspection of the pipe may also be made after delivery. The pipe shall be subject to rejection at any time on account of failure to meet any of the specification requirements, even though pipe samples may have been accepted as satisfactory at the place of manufacture. Pipe rejected after delivery shall be marked for identification and shall be removed from the site at once.

PART 2 – PRODUCTS

2.1 GENERAL

A. All materials for storm drainage system shall be new and unused.

2.2 PIPE

A. Reinforced Concrete Pipe: Pipe shall comply with the requirements of ASTM C76. All pipe 18 inches and smaller shall be Class V. All other pipe shall be Class III unless indicated otherwise on the Drawings.

Joints for the reinforced concrete pipe shall be the tongue and groove or bell and spigot type with rubber gasket conforming to ASTM C443.

Flared end pipe sections shall be constructed in conformance with ASTM C76, Class V requirements and shall be supplied by the same manufacturer as the pipe.

B. Slotted Corrugated Plastic Pipe for Subdrain: Materials, dimensions, physical properties and fabrication of pipe or tubing, couplings and fittings shall be in conformance with AASHTO-M252.

Piping and fittings (3 to 6 inches in diameter) shall conform to ASTM F-405.

Piping and fittings over 6 inches in diameter shall conform to ASTM F-667.

C. Filter Fabric for Underdrains shall be Mirafi 140N, Cevex25, or Typar 3351.

D. Filter Fabric for Flared End Sections and Headwalls with Stone Protection shall be Mirafi 140N, or approved equivalent.

E. High Density Corrugated Polyethylene Pipe and Fittings with smooth interior shall meet the requirements of ASTM D3350. Four-inch through 10-inch diameter pipe corrugated polyethylene drainage tubing shall meet the requirements of AASHTO M252. Twelve-inch through 60-inch diameter corrugated polyethylene pipe shall meet the requirements of AASHTO M294-01, Types S. Standard 45 Degree "Y" connections shall be fabricated to sizes shown on the Drawings.

Pipe joints and fittings shall conform to the requirements of AASHTO M252 or AASHTO M294-01: Coupling bands shall conform to the manufacturer's specifications. Couplers shall cover not less than one corrugation on each section of pipe.

Where called for on the plans, corrugated pipe shall be slotted or perforated by the manufacturer prior to delivery to the job site.

F. Polyvinyl Chloride (PVC) Pipe: Pipe and fittings shall comply with the requirements of ASTM D3034, rated SDR 35 and ASTM D1785 for schedule 40 and schedule 80 pipe. Pipe shall be continually marked with manufacturer's name, pipe size, cell classification, SDR rating, and ASTM D3034 classification.

G. Ductile Iron Pipe

1. Ductile iron pipe shall be designed in accordance with ANSI A21.50/AWWA C150 and manufactured in accordance with ANSI A21.51/AWWA C151.

2. Ductile iron pipe shall be thickness Class 52, furnished in 18-foot or 20-foot nominal lengths.

PART 3 EXECUTION

3.1 GENERAL

A. Contractor to verify the location, size invert and type of existing pipes at all points of connection prior to ordering new utility materials.

B. All pipe shall be laid accurately to the lines and grades shown on the drawings nd in conformance with the pipe manufacturer’s recommendations.

C. As soon as the trench is excavated to the normal grade of the bottom of the trench, the Contractor shall immediately place the bedding material in the trench. The pipe shall be firmly bedded in the compacted bedding material accurately to the lines and grades shown on the Drawings.

D. Laying Pipe: Each length of pipe shall be laid with firm, full and even bearing throughout its entire length, in a prepared trench. Pipe shall be laid with bells upgrade unless otherwise approved by the Engineer.

Every length of pipe shall be inspected and cleaned of all dirt and debris before being laid. The interior of the pipe and the jointing seal shall be free from sand, dirt and trash. Extreme care shall

be taken to keep the bells of the pipe free from dirt and rocks so that joints may be properly lubricated and assembled. No pipe shall be trimmed or chipped to fit.

No length of pipe shall be laid until the proceeding lengths of pipe have been thoroughly embedded in place, to prevent movement or disturbance of the pipe alignment.

E. Notch under pipe bells and joints where required to provide for uniform bearing under entire length of pipe.

F. Excavation, backfilling and compaction shall be as specified in Section 312300 – Excavation and Backfill.

G. Maintain optimum moisture content of bedding material to attain required compaction density.

H. Pipe Extension: Where an existing pipe is to be extended, the same type of pipe shall be used, unless otherwise approved by the Engineer.

I. Full Lengths of Pipe: Only full lengths of pipe shall be used in the installation except that partial lengths of pipe may be used at the entrance to structures, and to accommodate the required locations of service connection fittings.

J. Pipe Entrances to Structures: All pipe entering structures shall be cut flush with the inside face of the structure, and the cut ends of the pipe surface within the structure shall be properly rounded and finished so that there will be no protrusion, ragged edges or imperfections that will impede or affect the hydraulic characteristics of the stormwater flow. The method of cutting and finishing shall be subject to the approval of the Engineer.

K. Protection During Construction: The Contractor shall protect the installation at all times during construction, and movement of construction equipment, vehicles and loads over and adjacent to any pipe shall be performed at the Contractor's risk.

At all times when pipe laying is not in progress, all open ends of pipes shall be closed by approved temporary watertight plugs. If water is in the trench when work is resumed, the plug shall not be removed until the trench has been dewatered and all danger of water entering the pipe eliminated.

L. Water Pipe – Drain Pipe Separation: When a drain pipe crosses above or below a water pipe, the following procedures shall be utilized:

1. Relation to Water Mains

a) *Horizontal Separation*: Whenever possible drains shall be laid at a minimum at least 5 feet, horizontally, from any existing or proposed water main. Should local conditions prevent a lateral separation of 5 feet, a drain may be laid closer than 5 feet to a water main if:

i. It is laid in a separate trench, or if;

ii. It is laid in the same trench with the water mains located at one side on a bench of undistributed earth, and if;

iii. In either case the elevation of the top (crown) of the drain is at least 12 inches below the bottom (invert) of the water main.

b) *Vertical Separation*: Whenever drains must cross under water mains, the drain shall be laid at such an elevation that the top of the pipe is at least 12 inches below the bottom of the water main. When the elevation of the drain cannot be varied to meet the above requirements, the water main shall be relocated to provide this separation or reconstructed with mechanical-joint pipe for a distance of 10 feet on each side of the drain. One full length of water main should be centered over the drain so that both joints will be as far from the sewer as possible.

When it is impossible to obtain horizontal and/or vertical separation as stipulated above, both the water main and drain shall be constructed of mechanical-joint cement lined ductile iron pipe or other equivalent based on water tightness and structural soundness. Both pipes shall be pressure tested by an approved method to assure water tightness.

3.2 EXCAVATION AND BACKFILLING FOR PIPES

The type of materials to be used in bedding and backfilling and the method of placement shall conform to the requirements of Section 312300 – Excavation and Backfill, Earthwork, the details shown on the Drawings and the following.

A. Embedment materials are those used for bedding, haunching and initial backfill around pipes as illustrated on the drawings.

All embedment materials should be free from lumps of frozen soil or ice when placed. Embedment materials should be placed and compacted at optimum moisture content

B. Trench Bedding: Material must be provided to insure proper line and grade is maintained. Unsuitable or unstable materials shall be undercut and replaced with a suitable bedding material, placed in 6" lifts. Other methods of stabilization, such as geotextiles may be appropriate and their use must be approved by Owner's Representative.

Provide a stable and uniform bedding for the pipe and any protruding features of its joints and/or fittings. The middle of the bedding equal to 1/3 of the pipe outside diameter should be loosely placed, with the remainder compacted to a minimum of 95 percent standard proctor density.

C. Haunching: Proper haunching provides a major portion of the pipe's strength and stability. Exercise care to insure placement and compaction of the embedment material in the haunches. For larger diameter pipes (>30"), embedment materials should be worked under the haunches by hand. Haunching materials shall be placed and compacted in 6 inch maximum lifts, compacted to 95 percent modified proctor density.

D. Initial Backfill: The initial backfill shall be from the springline to 24 inches above the pipe to provide protection for the pipe from construction operations during placement of the final backfill and protect the pipe from stones or cobbles in the final backfill. Compact initial backfill per Section 312300 – Excavation and Backfill.

Flooding or jetting as a procedure for compaction are not allowed.

E. Final Backfill: The final backfill should be the same material as the proposed embankment or surface finishes. Generally, the excavated material may be used as final backfill. Placement should be as specified for the embankment. In lieu of a specification, the final backfill should be placed in 12 inch maximum lifts and compacted to a minimum 95 percent modified proctor density to

prevent excessive settlement at the surface. Compaction should be performed at optimum moisture content.

F. Vehicular and Construction Loads: During construction, avoid heavy equipment loads (> 40,000 lbs. per axle over the pipe. Additional temporary cover should be placed over the pipe for heavy construction load crossings. Hydrohammers or hoe-pak compactors may not be used over the pipe until at least 48 inches of cover have been provided.

3.3 CONNECTIONS TO EXISTING FACILITIES

A. General Requirements: The contractor shall make all required connections of the proposed drainage system into existing drainage system, where and as shown on the Drawings.

B. Compliance with Requirements of Owner of Facility: Connections into existing drainage system facilities shall be performed in accordance with the requirements of the Owner of the facility. The Contractor shall comply with all such requirements, including securing of all required permits, and paying the costs thereof.

A. Building Contractor: The Contractor shall coordinate the work with the work of the Building Contractor to determine the exact location and elevation of the point of entry into the building.

B. Connections: Roof drain connections to the site drainage system shall be made with fittings supplied by the pipe manufacturer.

3.4 MANHOLE CONNECTIONS

A. Manhole pipe connections for precast manhole bases may be accomplished by any method described below. The Contractor shall make sure that the outside diameter of the pipe is compatible with the particular pipe connection used.

1. A tapered hole filled with non-shrink waterproof grout after the pipe is inserted. This connection method will not be allowed when connecting PVC pipe to manholes.

2. The LOCK JOINT Flexible Manhole Sleeve cast in the wall of the manhole base. The stainless steel strap and exposed sleeve shall be protected from corrosion with a bitumastic coating.

3. PRESS WEDGE II gasket cast into the wall on the manhole base. The rubber wedge shall only be driven into the V slot from the outside of the manhole.

4. RES-SEAL, a cast iron compression ring which compresses a rubber "O" ring gasket into a tapered hole in the wall of the manhole base. Exposed metal shall be protected from corrosion with a bitumastic coating.

5. KOR-N-SEAL neoprene boot cast into the manhole wall. The stainless steel clamp shall be protected from corrosion with a bitumastic coating.

PART 4 – MEASUREMENT AND PAYMENT

4.1 METHOD OF MEASUREMENT

A. Storm Drainage Utility Piping generally including, but not limited to, the furnishing and installing all materials complete in place for subsequent use in the work, acceptably performed and

completed including all materials (pipe, bedding, fill, filter fabric), equipment, labor and incidentals, in accordance with this SECTION, as shown in the drawings, and as directed by the Owner's representative shall be measured PER LINEAR FOOT as indicated in Section 004100, FORM OF GENERAL BID.

4.2 BASIS OF PAYMENT

A. Storm Drainage Utility Piping will generally include but is not limited to the furnishing and installing of Storm Drainage Utility Piping for subsequent use in the work as described in this SECTION and in the Drawings, including all materials (pipe, bedding, fill, filter fabric), equipment, labor and incidentals, guarantees and warrantees for repair and/or replacement against defects, required in accordance with this SECTION, as shown in the drawings, and as directed by the Owner's representative shall be paid PER LINEAR FOOT as indicated in Section 004100, FORM OF GENERAL BID and shall be in accordance with Section 012000 MEASUREMENT and PAYMENT.

4.3 PAYMENT ITEMS

Item 33 41 00-01	4" PERFORATED HDPE PIPE	LINEAR FOOT
Item 33 41 00-02	12" HDPE PIPE	LINEAR FOOT

END SECTION 334100

INTENTIONALLY BLANK

SECTION 334726 STORM DRAINAGE PONDS AND RESERVOIRS

PART 1 – GENERAL

1.1 DESCRIPTION

A. This section specifies requirements for drainage facilities (bioretention, detention and infiltration) as shown on the drawings and details. The drainage facilities include the following:

1. Grass swales
2. Bioretention basins (rain garden)
3. Others identified as such on the drawings

B. The work includes:

1. Installing erosion and sedimentation controls
2. Clearing existing vegetation to allow for grading
3. Excavating to acceptable subgrade
4. Placing of bioretention soil mixture
5. Planting, seeding and mulching
6. Maintenance through the guarantee period

1.2 RELATED DOCUMENTS

A. Other specification Sections which directly relate to the work of this Section include:

1. Section 311000 – Site Clearing
2. Section 311400 – Earth Stripping and Stockpiling
3. Section 312300 – Excavation and Fill
4. Section 312500 – Erosion Control
5. Section 329300 – Plants
6. Section 334900 – Storm Utility Drainage Structures

1.3 QUALITY ASSURANCE

A. The Owner may designate a Representative (with experience in drainage facilities) to be on the site during the drainage facility installation work. The Representative shall observe the work and will advise Owner and Contractor as to the acceptability of the completed work.

B. All planting operations shall be performed by experienced personnel under competent supervision. Education, experience and certification or license by appropriate organization may be reviewed to evaluate competence.

C. The actual locations and spacing of plants must be as shown on the plans or as approved by the Representative.

1.4 COORDINATION

A. The Contractor shall be responsible for notifying the Owner of the start of drainage facility work requiring observance by the Owner's Representative.

B. If the requirements cannot be met with information provided in these specifications or they differ from other sections, notify the Owner's representative immediately for direction.

1.5 DELIVERY, STORAGE, AND HANDLING

A. Deliver plant materials to site in a healthy and undamaged condition immediately prior to placement. Plants not installed on the day of arrival at the site shall be stored in a shaded location and protected from the wind. Plants stored on site shall be protected from drying by covering roots with a moist mulch material. Plant roots must be watered if necessary to keep in a moist, but not wet, condition. Plants stored on site shall be planted within 3 days of delivery to the site unless agreed to in advance and appropriate precautions for ensuring plant viability are taken.

B. Move plant material with solid balls wrapped in burlap or in pots, with the exception of bare root stock.

C. Dead, unhealthy, injured or otherwise unacceptable plant materials shall be removed from the site and replaced as necessary.

D. Soils shall be protected during delivery and storage to prevent dehydration, minimize compaction, and maintain the integrity of the material.

E. Soil conditioners and amendments shall be delivered to the site in their original, unopened containers bearing the manufacturer's chemical analysis and name.

1.6 SUBMITTALS

A. Manufacturers Product Data

1. Submit manufacturer's literature and installation instructions attesting that the following materials meet the requirements specified:

a) Fertilizer
b) Mulch
c) Pipe
d) Loam
e) Compost
f) Soils
g) Filter fabric
h) Stone

B. Soil Test Reports

1. Prior to ordering soil materials, submit soil test report to the Representative for review and approval. Do not order materials until approval has been obtained. Delivered materials shall be from the same source as the tested material.

   a) Topsoil: The Contractor shall employ a certified testing laboratory to test the material, and shall submit test representative samples of on-site and off-site topsoil reports to the Representative. Reports shall include:

      i. Tests for Phosphorus, Potassium, Calcium, Soluble Salts, soil pH, and soil texture analysis in accordance with the current standards of the Association of Official Agriculture Chemists.

      ii. Submit at least one month before any topsoil spreading is scheduled.

      iii. Location of sample source.

C. Certificates

1. A Certificate of Compliance to the specifications shall be submitted by the nursery grower with each shipment of each type of plant, certifying that plants match the genus, species, and variety specified on the plant list.

D. Maintenance Manual

1. The Contractor shall submit a bound manual that details a schedule for proper maintenance of the plantings. This schedule shall include timing and methods for watering, fertilizing, mulching, pruning, mowing, and other maintenance operations for each type of supplied plant.

E. Submittal Schedule

1. Before installation:

   a) Manufacturer's Product Data
   b) Soil Test Reports
   c) Plant Certification
   d) Source of soil materials

2. After installation and before acceptance

   a) Maintenance manual

1.7 GUARANTEE

A. Provide one-year guarantee from date of plant material acceptance.

B. Replace plant materials found dead or not in a healthy growing condition. Plants shall exhibit at least 75% healthy branching and foliage, and be free of insect or disease damage. Replace plants during normal planting season.

C. Replacement: plant materials shall be of same size and species, with a new guarantee commencing on date of replacement. The Engineer/Representative shall be given a three day notice of installation of replacement plants to allow inspection of plant material.

1.8 INSPECTION FOR PLANTING ACCEPTANCE

A. After installation and a minimum thirty (30) day maintenance period, the Contractor shall make written request to the Representative to perform an inspection to determine whether the plantings are acceptable. If the plantings are acceptable, written notice will be given by the Representative to the Contractor stating that the guarantee period begins from the date of the inspection and acceptance.

B. If over 5% of the total number of plants are sickly or dead at the time of inspection, acceptance will not be granted, and the Contractor's responsibility for maintenance of all the plants shall be extended until replacements are made. All dead and unsatisfactory plants shall be promptly removed from the site. Replacements shall conform in all respects to the specification for new plants and shall be planted in the same manner.

PART 2 – PRODUCTS

2.1 MATERIALS

A. The mix in New England shall be "Native Warm Season Grass Mix" available from New England Wetland Plants, Inc., or approved equivalent.

B. Planted Vegetation, Bioretention Area. The drainage facility shall be planted with vegetation described in Section 329000 – Planting, and as shown on the landscape plan.

C. Topsoil. Refer to section 312300.

D. Bioretention Soil Mixture. The soil mix for drainage facilities should be a mixture of sand compost and soil, and the following specifications:

1. The bioretention soil shall be a uniform mixture of 40% sand, 20-30% topsoil, and 30-40% compost.

   a) The sand component should be gravelly sand that meets ASTM D 422.

Sieve (ASTM D422)	Percent Passing by Weight
2-inch	100
¾-inch	70-100
¼-inch	50-80
U.S. No. 40	15-40
U.S. No. 200	0-3

   b) The topsoil component shall be a sandy loam, loamy sand or loam texture.

c) The compost component must be processed from yard waste in accordance with MassDEP Guidelines. The compost shall not contain biosolids.

2. The pH shall be between 5.5 and 6.5, a range that is optimal for microbial activity and adsorption of nitrogen, phosphorus, and other pollutants.

3. The soil shall be free from stones, stumps, roots or other objects larger than 2" in any direction.

4. The soil mixture shall be free from noxious weeds or invasive species.

5. Clay content should not exceed 5%.

6. Use soils with 1.5% to 3% organic content and maximum 500-ppm soluble salts.

E. Underdrains. Use schedule 40 perforated PVC pipe as shown on the detail. Underdrains shall be laid at a minimum slope of 0.5%. Underdrains shall have non-perforated clean-out pipes at a rate of one clean-out per 1,000 square feet of surface area. Clean-outs shall extend 6 inches above the top elevation of the drainage facility mulch. The ends of underdrain pipes shall be capped, unless connected to another pipe.

F. Filter Fabric. Mirafi 140N or equal.

G. Crushed Stone. One and one-half inch (1½") crushed stone per Section 312300 – Excavation and Fill.

H. Mulch. Double-shredded hardwood mulch, composted for a minimum of 6 months. Pine mulch is not acceptable.

I. Erosion Control Blanket. See Section 312500 – Erosion Control.

PART 3 - EXECUTION

3.1 EROSION AND SEDIMENT CONTROLS

A. The work under this item shall conform to the relevant provisions of Section 312500 – Erosion Control, and Section 014126.13 EPA NPDES Construction General Permit, and the following:

1. Site stabilization shall be substantially completed before flows are directed to the drainage facility, in order to prevent clogging.

2. Never use the drainage facilities as temporary sediment traps for construction activities.

3.2 CLEARING AND GRUBBING

A. The work under this item shall conform to the relevant provisions of Sections 311000 – Site Clearing and 311400 – Earth Stripping and Stockpiling, and the following:

1. Clearing and grubbing shall occur in proposed drainage facility locations, as indicated on the Plans. Protect from damage adjacent areas of vegetation to remain.

2. Prior to construction, rope or fence off the area selected for the drainage facility.

3. No construction equipment allowed to drive across the area intended to serve as the drainage facility.

3.3 EXCAVATION/EARTHWORK

A. The work under this item shall conform to the relevant provisions of Sections 311400 – Earth Stripping and Stockpiling and 312300 – Excavation and Fill, and the following:

1. The drainage facility shall be excavated to the subgrade shown on the Plans.

2. Use light earth-moving equipment that will minimize compaction of drainage facilities sub-grades. Vehicle/machinery traffic in the depression portion of the drainage facility shall be avoided to prevent compaction of the underlying soils. If machinery must be used in the drainage facility for grading the contractor shall use wide track or marsh track equipment or light equipment with turf type tires. Compaction can be alleviated by using primary tilling operations such as a chisel plow, ripper or subsoiler to a 12 inch depth.

3. If the drainage facility has previously been used as a sedimentation basin, accumulated sediment material shall be removed by hand or in such a fashion to avoid compaction as described above in 3.03A(2) and observed by the Representative before the subsurface is tilled.

4. Place soil backfill in lifts not to exceed 12 inches depth per lift. Do not use heavy equipment within the drainage facility footprint. Work from outside the drainage facility footprint with an excavator to place the soil. Add any required soil amendments during tilling.

5. The soil lifts shall be compacted by saturating the entire area of the drainage facility until water flows from the under drain.

6. Use an appropriate sediment control device to treat sediment-laden water discharged from the underdrain.

7. If the soil mixture becomes contaminated with unapproved soils during the construction of the facility, the contaminated material shall be removed and replaced with uncontaminated material at no extra cost to the owner.

8. Fine grade by hand raking. Final elevations shall be within 2 inches of the elevations shown on the Plans.

9. Never perform earthwork related to the construction of the drainage facilities during wet weather or winter periods. On-site soil mixing or placement is not allowed if soil is saturated or subject to water within 48-hours.

10. Cover and store soil to prevent wetting or saturation.

3.4 UNDERDRAIN INSTALLATION

A. The work under this item shall conform to the relevant provisions of Section 312300 – Excavation and Fill, and the following:

1. As soon as the drainage facility excavation is brought to subgrade elevation, the filter fabric, crushed stone, and underdrain pipe shall be laid to the lines and grades shown on the drawings. Underdrain lines shall be placed at a maximum spacing of 10 feet on center.

2. Install pipe fittings and accessories in accordance with the manufacturers' instructions.

3. Verify that the pipe is installed at proper elevations. Backfill with crushed stone and wrap with filter fabric per the drawings.

4. Place bioretention soils around the underdrain system by hand, taking care not to damage the filter fabric and stone system.

3.5 SEEDING

A. The work under this item shall conform to the relevant provisions of Section 329200 – Turfs and Grasses, and the following:

1. Areas to be seeded shall be done between April 1 and June 15, or between August 30 and November 15. Do not seed if ground is saturated, snow covered, frozen, or in an otherwise unsuitable condition for seeding. Planting season may be extended earlier or later if weather conditions permit.

2. Seeding shall be done by hydroseed or by hand broadcasting. Do not use machinery that would result in soil compaction.

3. The seed bed shall be observed by the Representative prior to seeding. The seed bed shall be loosened by hand raking. Remove any stones, soil clods, or sticks larger than 2 inches in diameter.

4. In the event that vegetative cover has not become established by November 1, well composted organic mulch, jute netting, or other approved material shall be used to stabilize the site.

5. Use a low maintenance, rapidly germinating grasses, such as fescues.

6. Do not sod the basin floor or side slopes. Provide a dense turf of water tolerant grass.

3.6 PLANTING

A. The work under this item shall conform to the relevant provisions of Section 329000 – Planting, and the following:

1. Plant specified trees, shrubs and perennials between April 1 and June 1, or between August 30 and November 15. Do not plant if ground is saturated, snow covered, frozen, or in an otherwise unsuitable condition for planting. Planting season may be extended earlier or later if weather conditions permit.

2. Planting holes shall be at least twice the width of the root mass.

3. Remove all non-biodegradable pots, wrapping, and tags.

4. Place plants so that the root crown is 1 to 2 inches above grade.

5. Create a 4" high soil dike around each plant for watering.

6. Water plants by flooding the backfilled hole immediately following planting. Correct plant depth or alignment if they move during watering.

7. Place planting soils in 1-foot lifts and compact with minimal pressure until desired elevation is reached. Flooding the planting soils can be performed between each lift to provide proper compaction.

3.7 MULCHING

1. Prior to planting, place one half of the specified mulch layer in the specified planting area and work into the top 4 inches of soil.

2. Plant the vegetation as specified on the Plans.

3. Place the remaining double-shredded hardwood mulch to a depth of 3-4 inches around the plantings by hand.

4. Remove mulch deposits if spilled in locations outside of the planting areas.

5. Remove any pots, dead planting material or debris associated with planting.

6. If soil or materials fall on porous pavement or asphalt pavement, vacuum clean or clean as specified for the specific surface.

3.8 CLEAN-UP

A. Upon completion of the work, clean up work area and remove all excess debris from the site.

3.9 PLANTING STABILIZATION/MAINTENANCE

1. After final planting, water at 1" per square foot per week (less rain) during the stabilization period to ensure proper growth.

2. Ensure rain garden is protected from sediment laden discharges if portions of the site are not fully stabilized.

3. Monitor plantings for one year to ensure longevity.

4. Replace plantings as specified under the Guarantee section above.

5. Immediately following drainage facility construction, stabilize the floor and side slopes with a dense turf of water-tolerant grass.

6. Keep drainage facilities roped or fenced off while construction proceeds on other parts of the site.

7. Do not direct runoff into the drainage facility until the bottom and side slopes are fully stabilized.

PART 4 – MEASUREMENT AND PAYMENT

4.1 METHOD OF MEASUREMENT

A. Storm Drainage Ponds and Reservoirs generally including, but not limited to, the furnishing and installing all materials complete in place for subsequent use in the work, acceptably performed and completed including all materials (underdrain pipe, bedding, fill, bioretention soil mixture, mulch, stone and filter fabric), equipment, labor and incidentals, in accordance with this SECTION, as shown in the drawings, and as directed by the Owner's representative shall be measured PER LUMP SUM as indicated in Section 004100, FORM OF GENERAL BID.

B. Furnishing and installing planting within the Storm Drainage Ponds as identified in this SECTION and the Drawings is NOT included in the LUMP SUM price for Storm Drainage Ponds, and will be measured separately in accordance with Section 329300 PLANTS.

4.2 BASIS OF PAYMENT

A. Storm Drainage Ponds and Reservoirs will generally include but is not limited to the furnishing and installing of Storm Drainage Ponds and Reservoirs for subsequent use in the work as described in this SECTION and in the Drawings, including all materials (underdrain pipe, bedding, fill, bioretention soil mixture, mulch, stone and filter fabric), equipment, labor and incidentals, guarantees and warrantees for repair and/or replacement against defects, required in accordance with this SECTION, as shown in the drawings, and as directed by the Owner's representative shall be paid PER LUMP SUM as indicated in Section 004100, FORM OF GENERAL BID and shall be in accordance with Section 012000 MEASUREMENT and PAYMENT.

4.3 PAYMENT ITEMS

Item 33 47 26 BIORETENTION BASINS LUMP SUM

END SECTION 334726

INTENTIONALLY BLANK

SECTION 334900 STORM DRAINAGE STRUCTURES

PART 1 – GENERAL

1.1 DESCRIPTION

A. This Section specifies requirements for furnishing and installing the site storm drainage system structures.

B. The work includes:

1. Site storm drainage system manholes, catch basins, landscape (area) drains, and sediment control devices.

1.2 RELATED DOCUMENTS

A. Other specification Sections which directly relate to the work of this Section include:

1. Section 312300 – Excavation and Fill
2. Section 312500 – Erosion Control
3. Section 321640 – Site Cast-in-Place Concrete

1.3 SUBMITTALS

A. Shop drawings

1. Materials list of items proposed for the work.
2. Shop drawings or descriptive literature, or both, showing dimensions, joint and other details of all materials proposed for the work. Shop drawings shall be submitted to the Engineer for approval prior to ordering material.

B. As-Built Drawings

1. Submit 4 copies of As-Built Drawings upon completion and acceptance of work.
2. As-Built Drawings shall be complete and shall indicate the true measurement and location, horizontal and vertical, of all new drainage system construction. As-Built drawings shall include a minimum of three ties showing the distance to each catch basin, drain and manhole from fixed permanent objects. As-Built drawings shall also contain any additional information required by the municipality, and shall be stamped with the seal of a Licensed Land Surveyor and Licensed Professional Engineer.

1.4 COORDINATION AND VERIFICATION

A. Coordinate the work with the termination of storm drain connections at buildings, connections to municipal systems, and trenching operations.

B. The contractor shall field verify and survey the size, location and elevations of all existing pipe and utility lines prior to ordering of materials for this utility system. A report of the findings of the verification survey shall be submitted to the engineer for information and comment.

1.5 DELIVERY, STORAGE AND HANDLING

A. All materials shall be adequately protected from damage during transit. Structures shall not be dropped.

B. All structures and other appurtenances shall be inspected before placement in the work and any found to be defective from any cause, including damage caused by handling, and determined by the Engineer to be unrepairable, shall be replaced at no cost to the Owner.

C. Storage and handling of manholes, catch basins, landscape (area) drains, oil-grit separators, treatment units and other system appurtenances shall be in accordance with the manufacturer's recommendations.

1.6 INSPECTION

A. The manufacturer/supplier is responsible for the provision of all test requirements specified for each type of structure. In addition, any structure may be inspected at the plant for compliance with these specifications by an independent testing laboratory selected and paid by the Owner. The Contractor shall require the manufacturer's cooperation in these inspections.

B. Inspection of the structures may also be made after delivery. The structure shall be subject to rejection at any time on account of failure to meet any of the specification requirements, even though structure samples may have been accepted as satisfactory at the place of manufacture. Structures rejected after delivery shall be marked for identification and shall be removed from the site at once.

PART 2 – PRODUCTS

2.1 GENERAL

A. All materials for storm drainage system shall be new and unused.

2.2 CATCH BASINS (LANDSCAPE DRAINS)

A. Landscape (Area) drains shall be ADS manufacturer, "NYOPLAST" In-Line drain with cast ductile iron dome grate.

2.3 SILT SACKS/SEDIMENT CONTROL DEVICES

A. Install at locations shown on the drawings.

B. Manufacturer: ACF Environmental, Inc. or approved equal.

C. Material to be a polypropylene geotextile fabric with strength per ASTM D4884.

PART 3 EXECUTION

3.1 GENERAL

A. Contractor to verify the locations and types of existing pipes and structures at all points of connection prior to ordering new utility materials.

B. All structures shall be laid accurately to the locations and elevations shown on the drawings and in conformance with the structures manufacturer's recommendations.

C. As soon as the trench is excavated to the normal grade of the bottom of the trench, the Contractor shall immediately place the bedding material in the trench. The structure shall be firmly bedded in the compacted bedding material accurately to the locations and elevations shown on the Drawings.

D. Excavation, backfilling and compaction shall be as specified in Section 312300 – Excavation and Backfill.

E. Protection During Construction: The Contractor shall protect the installation at all times during construction, and movement of construction equipment, vehicles and loads over and adjacent to any structure shall be performed at the Contractor's risk.

At all times when structure installation is not in progress, all structure openings shall be closed by approved temporary watertight plugs. If water is in the trench when work is resumed, the plug shall not be removed until the trench has been dewatered and all danger of water entering the structure is eliminated.

Refer to Section

3.2 CATCH BASINS (LANDSCAPE DRAINS)

A. Landscape (area) drains shall conform accurately to the size of the adjoining pipes.

1. Landscape grates shall be manufactured from plastic compound with UV inhibitors.

2. Landscape grate to be used in a garden bed and other areas with high potential for ponding.

3. Landscape grate shall have a skid resistance texture.

3.3 CLEANING, TESTING AND REPAIR

A. The Contractor shall clean the entire drainage system of all debris and obstructions. This shall include, removal of all formwork from structures, concrete and mortar droppings, construction debris and dirt. The system shall be thoroughly flushed clean and the Contractor shall furnish all necessary hose, pumps, pipe and other equipment that may be required for this purpose. No debris shall be flushed into existing drains, storm recharge chambers, storm drains and/or streams.

B. Testing and Correction of Defective Work: If a mandrel 3 feet long and 90 percent of the pipe diameter cannot be pulled through the completed pipe runs after 7 days of completed trench backfill, the pipe line shall be deemed unacceptable and the pipe lines shall be removed and replaced. The Contractor shall make the necessary repairs or replacements required to permanently provide an open and structurally sound drainage system capable of supporting the anticipated loading from all sources throughout the year.

3.4 FINAL INSPECTION

A. Upon completion of the work, and before final acceptance by the Engineer, the entire drainage system shall be subjected to a final inspection in the presence of the Engineer. The work shall not be considered as complete until all requirements for line, grade, cleanliness, mandrel tests and other requirements have been met.

PART 4 – MEASUREMENT AND PAYMENT

4.1 METHOD OF MEASUREMENT

A. Storm Utility Drainage Structures generally including, but not limited to, the furnishing and installing all materials complete in place for subsequent use in the work, acceptably performed and completed including all materials (pipe, fittings, bedding, fill, filter fabric), equipment, labor and incidentals, in accordance with this SECTION, as shown in the drawings, and as directed by the Owner's representative shall be measured PER EACH item as indicated in Section 004100, FORM OF GENERAL BID.

4.2 BASIS OF PAYMENT

A. Storm Utility Drainage Structures will generally include but is not limited to the furnishing and installing of Storm Drainage Utility Piping for subsequent use in the work as described in this SECTION and in the Drawings, including all materials (pipe, fittings, bedding, fill, filter fabric), equipment, labor and incidentals, guarantees and warrantees for repair and/or replacement against defects, required in accordance with this SECTION, as shown in the drawings, and as directed by the Owner's representative shall be paid PER EACH item as indicated in Section 004100, FORM OF GENERAL BID and shall be in accordance with Section 012000 MEASUREMENT and PAYMENT.

4.3 PAYMENT ITEMS

Item 33 49 00	LANDSCAPE DRAIN	EACH

END SECTION 334900

SECTION 337173

ELECTRICAL WORK

PART I - GENERAL

1.01 RELATED DOCUMENTS

A. Contract Documents and general provisions of the Contract, including General and Supplementary Conditions and Division 1 Specification Sections, apply to this Section.

1.02 SUMMARY

A. The work of this Section consists of providing all labor, equipment, materials, incidental work, and construction methods necessary to furnish and install electrical system, as indicated on the Contract Documents and as specified herein.

B. The work of this Section consists of all electrical work and related items as indicated on the Drawings and/or as included herein and but not necessarily limited to the following:

1. Electrical Work shall consist of the furnishing and installation of shoreline lighting, walkway lighting, and various electrical components. The complete system shall include luminaires, conduit, wire, driver vaults, light poles, pole foundations, control cabinet, irrigation power supply, connections, and any other equipment required to complete the installation as follows:

a. Electric Utility Company Service Connection – Including manhole break/conduit riser, coordination with and fees borne of Electric Utility Company.

b. Excavation for lighting system – This Work will consist of saw cutting and patching pavement, excavation and backfill of all trenches for lighting system conduits, handholes, control cabinets foundation, and light post foundations.

1.03 RELATED WORK UNDER OTHER SECTIONS

A. The following items of related work are specified and included in other Sections of the Specifications:

1. Section 312300, EXCAVATION AND FILL

2. Section 321640, SITE CAST-IN-PLACE CONCRETE

1.04 REFERENCES

A. The following standards shall apply to the work of this Section. The publications listed below shall be of current issue number and date and shall form a part of these Specifications to the extent referenced. The publications are referred to in the text by basic designation only.

1. American National Standards Institute (ANSI) Publications:

a. C2 - 93 National Electrical Safety Code, 2766-0879

b. C82.4 - 85High Intensity Discharge Lamp Ballasts (Multiple Supply Type), 0652-3721

2. American Society for Testing and Materials (ASTM) Publications:

a. A48 Gray Iron Castings

b. A123 Zinc (Hot Dipped Galvanized) Coatings on Iron and Steel Products

c. A153 Zinc Coating (Hot Dip) on Iron and Steel Hardware

d. A366/A366M Steel, Sheet, Carbon, Cold Rolled, Commercial Quality

e. A526/A526M Steel Sheet, Zinc-Coated, (Galvanized) by the Hot-Dip Process, Commercial Quality

f. A580 Stainless and Heat-Resisting Steel Wire

g. A853 Steel Wire, Carbon, for General Use

h. B108 Aluminum-Alloy Permanent Mold Castings

i. B597 Practice for Heat Treatment of Aluminum Alloys

j. B633 Electro deposited Coatings of Zinc on Iron and Steel

k. D1435 Outdoor Weathering of Plastics

l. D1784 Rigid Polyvinyl Chloride (PVC) Compounds and Chlorinated Polyvinyl Chloride (CPVC) Compounds

m. D2564 Solvent Cements for Polyvinyl Chloride (PVC) Plastic Piping Systems

3. Board of Fire Prevention Regulations:

a. 527CMR 12.00 Massachusetts Electrical Code (Article 27 of Mass State Building Code, 6th Edition)

4. Illuminating Engineering Society (IES) Publication:

a. IES – 2000 Lighting Handbook, Ninth Edition

5. National Electrical Manufacturers Association (NEMA) Publication:

a. ICS2 – 88 Industrial Control Devices, Controllers, and Assemblies, 3100-1839

b. ICS6 - 4/1990(rev) Enclosures for Industrial Controls and Systems (Base, 1988)

6. National Fire Protection Association (NFPA) Publication:

a. 70 National Electrical Code

b. 101 Code for Safety to Life from Fire in Buildings and Structures

7. Underwriter's Laboratories Inc. (UL) Publications:

a. 50 Electrical Cabinets and Boxes

b. 57 Electrical Lighting Fixtures

c. 508 Standards for Industrial Control Equipment

d. 773 – 87 Plug In, Locking Type Photo Controls for Use With Area Lighting, 3851-0887

e. 773A – 89 Non-Industrial Photoelectric Switches for Lighting Control, 3870-2446

1.05 SUBMITTALS

A. At least thirty days prior to intended use, the Contractor shall provide the following samples, Shop Drawings, and submittals in conformance with the requirements of Division 1 and as stated herein. Contractor shall not begin shop drawings until receiving Engineer's review of proposed material.

Contractor shall not order materials until receiving Engineer's review of samples, certification, or test results. Delivered materials shall closely match the approved samples.

1. Complete Shop Drawings for the following:
   a. Each luminaire, including fabrication and assembly drawings, mounding detail, and bill of material.
   b. Luminaire photometric data, including isolux lines of horizontal foot-candles based on required mounting height; average and minimum ratio, computerized candlepower distribution data graphically representing in polar coordinates the average vertical transverse through 75 degree lateral, coefficients of utilization curves (street and house side).
   c. Lighting calculatations
   d. Panelboards Electrical Equipment and Wiring.
   e. Lighting poles, including foundation details, dimensions, wind loading calculations, pole deflection and other applicable information. Wind loading calculations shall be stamped by a Registered Professional Structural Engineer in the state of Massachusetts.
   f. Pole foundations

B. Manufacturer's data shall be submitted for the following:
   a. Luminaires, including lamps, and ballasts
   b. Light Poles
   c. Conduits, fittings and all associated components required for a complete conduit installation.
   d. Lamp Sockets and Lamp Holders.
   e. Wire Types and Sizes.
   f. Warning Tape

C. Samples shall be submitted for the following:
   1. Each type Luminaire.
   2. Pole and luminaire finish

D. Certified Test Reports:
   1. Distribution data according to ANSI/IES classification type (as defined in IES Lighting Handbook).
   2. Field Test Reports: The Contractor shall submit field test reports to the Engineer in accordance with the requirements of the Division I specification for the following items.
      a. Wire Megger Testing
      b. Ground Rod Resistance Testing
      c. Grounding System Testing
   3. Lighting System: Within 30 days following execution of the Contract, the Contractor shall submit to the Engineer for approval, a list of equipment that he proposes to install under this section. The submission shall include all equipment identified on the plans or in the specifications

by the name of the manufacturer, model or identifying number of each item. The list shall be supplemented by catalog cuts and such other data as may be required.

1.06 PRODUCT DELIVERY, STORAGE AND HANDLING

A. Ship lighting fixtures/accessories and all electrical apparatus securely packaged and labeled for safe handling in shipment and to avoid damage or distortion.

B. Store lighting fixtures/accessories and all electrical apparatus in secure and dry facility and in original packaging in a manner to prevent soiling, physical damage, wetting or corrosion prior to installation.

1.07 WARRANTIES

A. All warranties that the Contractor receives from the manufacturer of equipment and materials pertinent to the complete and satisfactory operation of the lighting system installation shall be turned over to the Owner at the time of acceptance of the system, at no cost to the Owner. Each Warranty so furnished shall indicate its expiration date.

1. The Electrical System shall be completed one months prior to the contract completion date. The lighting system shall then be put in operation for the specified one month period during which time fine tuning and adjustments are to be made at no additional cost to the Owner.

2. The Contractor shall be completely responsible for all maintenance, repairs and replacement of damaged equipment during the functional test and throughout the performance warranty period.

3. The Contractor shall provide a performance warranty for one year on the work performed under this contract including the performance of all equipment and components of the park lighting system specified. The performance warranty responsibility of the contractor shall commence after official acceptance by the responsible agency.

4. If within 48 hours after notification by the Engineer of a malfunction, and the Contractor fails to make such repairs as necessary, the Engineer will undertake repairs of which all costs are the responsibility of the Contractor.

5. The cost of any maintenance necessary, except electrical energy, shall be at the Contractor's expense and will be considered as included in the price paid for the Contract item involved and no additional compensation will be allowed therefore.

PART 2 PRODUCTS

2.01 GENERAL

A. All electrical equipment and materials shall be designed, manufactured, tested, and rated to conform to the latest requirements, issues, and revisions of the National Electric Code (NEC), Federal Specifications, the National Electrical Manufacturers Association (NEMA), the Underwriters Laboratories, Inc. (UL), the American Society for Testing and Materials (ASTM), the American National Standards Institute (ANSI), and the American Institute of Electrical Engineers (AIEE).

B. All material must have the name or trademark of the manufacturer stamped thereon, where such identification is customary.

2.02 RIGID PLASTIC CONDUIT

A. Conduit of the sizes shown on the plans shall be new grey heavy wall rigid plastic conduit of homogeneous polyvinyl chloride construction with standard wall thickness. The conduit must conform to NEMA Standards Publication TC-2 for Schedule 40 type EPC Conduit. A 3/8 inch polypropylene pull rope must be installed in conduits not to be used immediately.

B. The rigid plastic conduit must conform to and meet all current requirements and testing procedures of the American Society of Testing and Materials whenever such standards and test shall apply. The following ASTM standards shall apply as applicable:

1. ASTM Specification D1784 - Schedule 40 - Extra Heavy Wall Rigid Plastic Conduit

2. ASTM Specification D2564 - Specification for Solvent Cements for PVC Plastic Pipe & Fittings

C. Couplings and Fittings

1. Conduit couplings shall be constructed of polyvinyl chloride rigid plastic formed to fit the outside diameter of the conduit, to be used in conjunction with a heavy bodied solvent cement.

2. ASTM D2564 - Specifications for Solvent Cements for Polyvinyl Chloride Plastic Pipe and Fittings.

3. Conduit Duct Bell Ends shall be polyvinyl chloride rigid plastic approved by Underwriters' Laboratories, Inc. for use on threadless rigid plastic conduit, to be used in conjunction with a heavy bodied solvent cement.

2.03 RIGID STEEL CONDUIT

A. Rigid steel conduit shall be mild hot-dipped galvanized steel piping not less than 3/4 inch size. The galvanized coating of zinc shall be of uniform thickness both inside and outside, and shall be applied to the threads of the conduit. The conduit shall be further protected by one or more of the following:

1. Electro-galvanized after hot-dipped galvanizing and/or

2. An alkaline cleaner bath and rinse and a chromic acid bath to form a film of zinc chromate over all and/or

3. A thin polyvinyl or a lacquer coating baked on the inside and outside of conduit.

4. Conduit protected solely by enamel, electro-galvanizing, or other processes, etc., will not be acceptable. Conduit shall also conform to the following specifications:

   a. Federal Specification WW-C-581.

   b. ANSI Standard C80.1.

   c. ASTM Standard A 120.

   d. Underwriters' Laboratories UL 6.

5. Conduit shall be as manufactured by Allied Tube and Conduit Corp., Wheatland Tube Co., Republic Steel Corp. or equal.

2.04 UNDERGROUND WARNING TAPE

A. Warning tape shall be permanent, bright-colored, continuous-printed, vinyl tape, not less than 6”-wide by 5 mils thick. Tape shall be compounded for permanent direct-burial service and embedded with a continuous detectable metallic strip or core. Tape shall have a printed legend that indicates type of underground line with color conforming to the latest American Public Works Association (APWA) Uniform Color Code.

B. Tape shall conform to the specifications of OSHA Regulation 1926-956 and the DOT Office of Pipeline Safety USAS B31.8. Manufacturer's data for underground warning tape shall be submitted with conduit submittal.

2.05 WIRE AND CABLE

A. The conductor shall be composed of soft drawn 7-strand copper of the gauge shown and the insulation shall be installed as a single jacket of cross-linked polyethylene of Underwriter's Laboratories Type USE-2 or RHH-RHW-2 rated at 90 degrees C continuous in wet and dry locations 600 volt as per the National Electrical Code conforming to UL 44.

B. Wire and cable furnished and used shall be new and shall have the size, grade of insulation, voltage and manufacturer's name permanently marked on the outer covering at regular intervals. Wire and cable shall be delivered to the site in complete coils or reels with identifying size, type and insulation tags. Wire and cable shall be protected from weather and damage during storage and handling.

2.06 GROUNDING CONDUCTORS

A. Grounding Electrode Conductors:

1. All conductors in conduit and handholes shall be insulated.

2. Insulated: No. 10 AWG and smaller shall be solid copper per ASTM B3. Type shall be the same as power conductors. Color shall be green.

3. Uninsulated: No. 10 AWG and smaller shall be solid copper per ASTM B3.

B. Equipment Grounding Conductors:

1. Insulated: No. 10 AWG and smaller shall be solid copper per ASTM B3. Type shall be the same as power or branch circuit conductors. Covering shall be continuous green color.

2. Uninsulated: No. 10 AWG and smaller shall be solid bare copper per ASTM B3.

2.07 SPLICING AND TERMINATION MATERIALS FOR 600 VOLT RATED WIRE AND CABLES

A. Connectors and Splicing Materials

1. All splices, outside of the lighting control cabinet, shall be waterproof

2. Splices shall be made in accordance with the Electrical Code by Journeymen Electricians holding “Certificate B” issued by the Board of State Examiners of Electricians.

3. The conductors shall be joined by the use of connectors and terminal lugs, listed by Underwriters Laboratory, and meet all requirements of the Massachusetts Electrical Code.

4. Splices shall be insulated. Unless otherwise specified, the Contractor may use any of the following:

   a. Splices shall be suitable for continuous submersion in water. In underground raceway systems splices shall be made only in accessible locations such as handholes. Splices shall be made using a compression connector on the conductors and then covering with an insulation and jacket material equivalent to that of the cable. Method shall be by pouring a thermosetting resin into a mold that surrounds the joined conductors, or by utilizing a sealant-filled, thick-wall, heat-shrinkable, thermosetting tubing. **Spring connectors ("Wire-nuts") may not be used.**

B. Tapes:

1. Vinyl Tape: Conforming to ANSI/UL 510 and ASTM D3005

   a. Interior Dry Locations: 7 mils, ASTM D3005 (Type 1), Scotch (3M) No. 33, or accepted equal

   b. Exterior or Damp and Wet Locations: 8.5 mils, ASTM D3005 (Type II), Scotch (3M) No. 88, or accepted equal.

2. Rubber Tape: 30 mils thick, ethylene propylene rubber (EPR) based, rated for 130 degrees C operation, conforming to ASTM D1373, Scotch (3M) No. 130C, or accepted equal.

2.08 CEMENT CONCRETE FOR LIGHT POLE FOUNDATIONS, AND LIGHTING CONTROL CABINET FOUNDATION

A. Cement concrete shall have a compressive strength of 4,000 pounds per square inch (psi) required at 28 days, with minimum cement factor of 610 pounds, and 3/4 inch maximum size crushed aggregate.

B. Portland Cement: Cement shall conform to AASHTO M85, Type II.

C. Fine Aggregate: Fine aggregate shall be washed, inert, natural sand conforming to the requirements of AASHTO M6.

D. Coarse Aggregate: Coarse aggregate shall consist of well graded washed gravel or crushed stone conforming to the requirements of AASHTO M80.

E. Water: Water used in mixing concrete shall be clean and free from deleterious materials.

F. Admixtures for water reducing, retarding, accelerating, improving bond, and for other specific properties may be used when specifically recommended and designed by the manufacturer of concrete and approved by the Engineer. Refer to Specification Section 03300 – Concrete for concrete and reinforcing steel placement.

2.09 PEDESTRIAN LIGHT POLES

A. The lamp post and all its materials used in its manufacture shall meet the requirements of the American Association of State Highways and Transportation Officials (AASHTO); specifically the Standard Specification of Structural Supports for Highway Signs, Luminaires, and Traffic Signals.

B. The lamp post base shall be manufactured as a two-piece heavy wall GRAY IRON casting per ASTM Specification A48-83 Class 30, or equivalent. The sections and wall thickness shall be as indicated on the drawing(s). The column shall be manufactured of no less than 11 gauge STEEL and shall be of monotube construction. The bidder shall furnish detailed drawings and specifications on the product being offered. The bidder shall also furnish, if requested by the awarding Owner, a complete set of

calculations by a registered Professional Engineer, that their post does in fact meet AASHTO specifications as stated above.

C. The Light Pole shall consist of three (3) main components:

1. Tapered Cast-Iron Shaft - It shall have an overall length of 14 ft. 3 in. The shaft shall have twelve (12) flat flutes, as indicated on the drawing and shall be of monotube construction. It is imperative that the flutes shall terminate 1 in. above the top of the ornamental base. At this point, the shaft shall be of a round cross-section. A ¾ in. minimum thickness base plate shall be welded to the bottom of the shaft (3/16" continuous weld top and bottom of base shaft joint), suitable for mounting on four (4) 1 in. diameter anchor bolts on a 10 ½" to 15" diameter bolt circle. A 1 1/8" W x 4 ½" L slot should be used to accomplish the 10 ½" – 15" bolt circle pattern as specified (see base plate detail in drawing provided). The shaft shall have a 4" x 6" min. handhole and cover for wiring. Use Spring City Madison Steel style post, or an approved equivalent.

2. Heavy Wall Cast-Iron Base - The base shall be a two (2) piece cast-iron ornamental slip over base, manufactured per ASTM A48-83 Class 30. It shall be of a heavy wall design and ornamentation and wall thickness shall be as indicated on the drawing(s). Base diameter shall be 20 in. max. An access door opposite the shaft handhole shall be provided.

3. Steel Tenon - The top of the shaft shall have a shaft to consist of a 3 ½ in. O.D. schedule 40 pipe, with three (3) inches of pipe extending beyond the top of the shaft to accommodate luminaire slip fitter.

2.10 LUMINAIRES

A. Light Emitting Diode (LED) Luminaires

1. The luminaire shall be King Washington series catalog number K118R-BAAR-III-75(SSL)-5000-120-K16-QUINCY or approved equal.

2. The luminaire shall be UL listed for use in wet locations.

3. The luminaire shall use high output, high brightness LEDs.

4. The LEDs shall be mounted in arrays, on printed circuit boards designed to maximize heat transfer to the heat sink surface.

5. The LED arrays shall be mounted to minimize up-light and classified as semi-cutoff.

6. The luminaire shall be a minimum of 70 Watts.

7. The LEDs shall be attached to the printed circuit board with not less than 90% pure silver to insure optimal electrical and thermal conductivity.

8. The LEDs and printed circuit boards shall be protected from moisture and corrosion by a conformal coating of 1 to 3 mils.

9. The LEDs and printed circuit board construction shall be environmentally friendly and 100% recyclable. They shall not contain lead, mercury or any other hazardous substances and shall be RoHS compliant.

10. The LED life rating shall be determined in accordance with IESNA LM-80-08.

11. The luminaire shall be provided with individual, acrylic, refractor type optics applied to each LED.

12. The luminaire shall provide Type III or V light distribution per the IESNA classifications. Testing shall be done in accordance with IESNA LM-79-08.

13. The LED arrays are built in series-parallel circuits which maintain overall light output in the event of single LED failures.

14. The LEDs and LED driver shall operate over a -40°C (-40°F) to +50°C (122°F) ambient air temperature range.

15. The High Performance white LEDs will have a life expectancy of approximately 70,000 hours with not less than 70% of original brightness (lumen maintenance), rated at 25°C.

16. The High Brightness, High Output LED's shall be 4500K color temperature with a minimum of 75 CRI.

17. The luminaire shall have a minimum 3500 initial delivered lumen rating when operated at steady state with an average ambient temperature of 25°C (77°F).

18. The luminaire efficacy shall be at least 50 lumens/watt.

19. Luminaire Photometric Requirements

    a. The intent is for the accepted luminaire type to comply with the photometric requirements of the area. The manufacturer for the lighting fixture type shall submit detailed computer generated printouts for each typical area. Each detailed printout shall have a cover sheet indicating the following:
        1) Project Name
        2) Location of Typical Area
        3) Lamp Data per Luminaire
        4) Manufacturer, Address & Telephone
        5) Luminaire Catalogue #
        6) Luminaire Locations, Mounting Height
        7) Luminaire Orientation

    b. Point by Point Lighting Calculations shall be provided
        1) Computer generated lighting calculations specifying the maintained illuminance as a maximum, average, minimum and average to minimum uniformity for both the pathway and the open space area shall be submitted for all substitute luminaires. Calculation shall be generated in accordance with ANSI/IESNA Standard RP-8-00. Distribution data shall be ANSI/IES classification type 5 as defined in IES Lighting Handbook
        2) All calculations shall include an electronic version of the IES photometric file used for the calculation.
        3) Lighting Calculation point spacing shall be 5'x5'.

20. Calculations must be conducted to conform to all applicable light-loss-factors, illuminance and uniformity standards of the IESNA/ANSI RP-8-00 and the IESNA Lighting Handbook.

21. The luminaire shall be free from all defects in materials and workmanship for a period of five (5) years from the date of manufacture.

22. The luminaire manufacturer shall warrant the LED boards/system, during the stated warranty period, against failure defined as more than three (3) simultaneous non-operating LEDs.

23. The driver shall be warranted for five (5) years.

B. RECESSED WALL LIGHTS

1. The luminaire shall be B-K Lighting catalog number B-YSL-LED-e16-MIT-C or approved equal.

2. The luminaire shall be UL listed for use in wet locations.

3. The luminaire shall use high output, high brightness LEDs.

4. The LEDs shall be mounted in arrays, on printed circuit boards designed to maximize heat transfer to the heat sink surface.

5. The luminaire shall be 8 Watts.

6. The luminaire shall have an integral non-dimming driver and provide a minimum 50,000 hour rated life at 70% of initial lumens (L70).

7. The luminaire shall provide light with a color temperature of 3100K and a minimum CRI of 90.

8. The luminaire shall be constructed of Type 360 Brass, fully machined from solid billet. The design shall provide an enclosed, water-proof wireway and integral heat sink for maximum component life. A high temperature, silicone 'O' Ring shall provide a water-tight seal. It shall be provided with a hardcoat (Type III) black anodize finish for maximum corrosion resistance. A weather-tight cable connector with a low voltage cable of suitable length for reaching the remote driver shall be provided.

9. The faceplate shall be fully machined from solid billet. Countersunk holes provide for flush hardware mounting. A 1/8" thick HT-805A silicone foam gasket with acrylic adhesive shall be used for a water-tight seal.

10. The louver pattern is machined into the faceplate to prevent direct view to the source at nadir with 30° optical cutoff.

11. The lens shall be shock resistant, tempered, and adhered to the faceplate to provide a hermetically sealed optical compartment.

12. The luminaire shall be free from all defects in materials and workmanship for a period of five (5) years from the date of manufacture.

13. The driver shall be warranted for five (5) years.

C. WALL MOUNTED KEYSTONE LIGHT

1. The luminaire shall be Hunza Mouse Lite Square or approved equal.

2. The luminaire shall be UL listed for use in wet locations.

3. The luminaire shall use high output, high brightness LEDs.

4. The LEDs shall be mounted in arrays, on printed circuit boards designed to maximize heat transfer to the heat sink surface.

5. The luminaire shall be 5 Watts.

6. The luminaire shall have an integral non-dimming driver and provide a minimum 35,000 hour rated life at 70% of initial lumens (L70).

7. The luminaire shall provide light with a color temperature of 2800K.

8. The luminaire shall be CNC finished machined from investment cast in bronze with a forged brass mounting plate.

9. The lens shall be 1/8" frosted tempered shatter resistant glass

10. The luminaire shall have an integral 110/240-12 Volt transformer built into the base.

11. The luminaire shall be free from all defects in materials and workmanship for a period of five (5) years from the date of manufacture.

12. The driver shall be warranted for five (5) years.

2.11 DIRECT BURIED DRIVER VAULT

A. The driver vault enclosure shall be Q-Tran model Q-Vault-5 or approved equal. The internal driver for vaults powering two luminaires shall be Q-SET-ELED-120-UNV/12 or approved equal. The internal drivers for vaults powering three luminaires shall consist of (1) Q-SET-ELED-120-UNV/12 or approved equal and (1) Q-SET-ELED-60-UNV/12.

B. The enclosure shall be an IP68 submersible rated, burial enclosure. It shall be constructed of compression molded composite for strength and durability. The top shall be sealed with a submarine grade gasket with a 40% compression rate, eliminating any potential water intrusion. The top shall be held in place by Slotted/Hex 316 stainless steel bolts that are threaded into replaceable brass nuts. The gasket shall be protected by mechanical stops on the housing to protect it from over-compression, allowing the installer the ability to compress tighten the bolts on the door without over compressing the gasket, while still providing the tightest connection possible.

C. The internal drivers shall be IP66 and totally encapsulated in epoxy to limit water exposure and provide thermal protection provide either 1 or 2 12VDC, 60W outputs depending on the amount of luminaires powered.

2.12 LIGHTING CONTROL CABINET

A. The lighting control cabinet shall be constructed by the manufacture and factory wired to include all the components listed herein. The lighting control cabinet shall be UL 508 listed. The lighting control cabinet shall be Milbank, Myers Power Products (MEUG16), VIT Strong Box, or approved equivalent.

B. The lighting control cabinet shall be NEMA 3R and shall be constructed of aluminum or stainless steel to the minimum dimensions shown on the contract drawings. All seams shall be welded solid and ground smooth. Door hinges shall be continuous and constructed of stainless steel. The enclosure shall be provided with all required mounting hardware and anchor bolts to be mounted to the specified concrete foundation. Refer to contract drawings for paint finish.

C. The lighting control cabinet shall be provided with a customer compartment and a separate, lockable section for Electric Utility Metering equipment and electric service terminations. The distribution equipment in the customer compartment shall be behind an internal door.

D. The doors on the enclosure shall be constructed from the same material as the enclosure. The external door for the customer compartment shall be provided with louvers in the lower section and with filter

frame and paper filter element on the inside of the enclosure. Additional hardware shall include a brass padlock, directory frame and eight sets of keys. Two sets of keys shall be sent to National Grid and six sets of keys shall be sent to the Town of Quincy.

E. Anchor bolts shall be provided with the enclosure. The anchor bolts shall be galvanized steel. Galvanized steel nuts, lock washers, and flat washers shall be provided with the anchors bolts.

F. The Lighting Control Cabinet shall include the meter socket, panelboard, lighting contactor, HOA switch, receptacle, internal light fixture, and photo-electric switch control. All required electrical equipment shall be provided in the Lighting Control Cabinet by the manufacture. All electrical equipment shall be factory wired. The Lighting Control Cabinet shall be shipped to the site ready for installation by the Contractor.

G. The lighting control cabinet shall be suitable for use for a 120/240 Volt, one (1) phase, three (3) wire electric service. The service and distribution equipment located within the cabinet shall be rated for 100 Amperes, minimum, with a fault current interrupting capacity of 10,000 Amperes symmetrical.

H. The Lighting Load Center shall be labeled as follows:

I. LIGHTING CONTROL

J. The label shall be factory stamped into the door of the Lighting Load Center. Text height shall be 1-inch tall.

K. All work shall be constructed as shown on the plans or as required by the utility company and required by the Engineer. The Contractor shall give adequate notice to the utility company for scheduling of work by utility.

L. Lighting Load Center foundation shall be constructed as detailed on the Contract Drawings and to the relevant provisions of Section 801 of the Standard Specification for Highways and Bridges.

M. The Lighting Load Center shall be installed atop the foundation as noted in this Specification and the Contract Drawings. The cabinet door shall face away from the roadway, or as required by the Engineer. It shall be determined that no obstruction, including a light pole, will interfere with opening, closing, or access to the controller.

N. Each location, as shown on the plans, may be diagrammatic only, and the location shall be such as to not interfere with access to private property or to detract from the general appearance of the area. The location shall not also inhibit pedestrian travel of the public way, including minimum obstruction free access of 3 feet. The Contractor shall call to the attention of the Engineer a location that may look objectionable before commencing work at the controller site.

O. The electrical equipment to be installed in each controller shall be securely fastened to the backboard in a neat and workmanlike manner. Electrical equipment shall be arranged in the controller and wired in accordance to the wiring diagrams on the detail sheets, or as specified herein.

P. Within the controller, the Contractor shall bind wire groups together with cable ties; and all conductors shall be permanently identified with circuit numbers using vinyl cloth, plasticized card stock tags with pre-printed legends. Tags shall be fastened to cables with cable ties.

Q. The Contractor shall submit for approval a wiring diagram of the controller interior.

R. The photoelectric switch (cell) shall be located as indicated on the plans.

PART 3 EXECUTION

3.01 GENERAL

A. All underground installations, including any required wiring, must be completed before the finished surface is placed on the roadways, sidewalks, and landscaped areas. All excavations in roadways and sidewalks required for the installation of conduit, handholes, and pole foundations shall be completed prior to placing and compacting roadway and sidewalk gravel. The raceway system shall be completed prior to placement of all plantings.

B. The Contractor is responsible for all equipment until final acceptance of the Contract, and for all damage from any cause whatsoever.

3.02 CONDUIT

A. PVC Conduit shall be enveloped in sand as called for in the Contract Drawings.

B. Underground Warning Tape shall be installed over all underground conduit within 12" of finished grade.

C. Plastic conduits entering pre-cast polymer concrete handholes shall be terminated 1-1/2 inches inside the wall of the handhole and shall have attached a Duct Bell End of the required size, using the solvent cement as called for in the specifications. Conduits shall be installed a minimum of 3" above the bottom of the handhole.

D. All conduit installed in handholes shall be installed in knockouts provided in the handhole and No Excess knockouts shall be made. The knockouts are designed to be made prior to backfilling around the handholes. After the conduit has been installed in the handhole, the open space between the handhole and the conduit shall be sealed. Any conduit installed in such a manner as to block complete access to any other conduit shall be removed and reset.

E. Terminations:

1. Where raceways are terminated with threaded hubs, screw raceways or fittings tightly into hub so end bears against wire protection shoulder. Where chase nipples are used align raceways so coupling is square to box; tighten chase nipple so no threads are exposed.

2. Install pull wires in empty raceways. Use polypropylene or monofilament plastic line with not less than 200-lb tensile strength. Leave at least 12 inches of slack at each end of pull wire.

3.03 INSTALLATION OF WIRES AND CABLES RATED 600 VOLT AND BELOW

A. General: Installation shall conform to the requirements of NFPA 70, Massachusetts Electrical Code and to the requirements specified herein.

B. No wire shall be drawn into any conduit until all work which may cause cable damage is complete.

C. All wire shall be continuous from fixture base to fixture base without running splices in conduits. All wires shall extend 24" above the base, connected at ends and rolled back into the base.

D. All wire terminals, taps and splices shall be made secure with connectors, splicing materials and methods as hereinafter specified.

E. All splices in handholes shall be with solderless connectors. The neutral and ground connection in the post top shall be with an insulated pressure connector.

F. All incoming wires and outgoing wires in lighting control boxes, handholes and poles shall be banded with 1/2-inch colored plastic marking tape installed at two locations 6 inches from the taped splice and 18 inches from the taped splice.

G. Coatings and rust on conduits and grounding rods shall be removed at the location where the ground fittings are to be installed.

H. The bare copper conductor shall be connected to the continuous insulated bonding lead which shall be identified with green plastic marking tape as noted in the specifications. Bonding leads for lighting fixtures on posts shall be an insulated conductor, marked green, which shall be extended to the nearest handhole and interconnected to the bare copper conductor and the ground rod.

I. All grounding shall conform to the applicable provisions of the National Electrical Code.

J. Minimum Conductor Sizes: No. 10 AWG for power and branch circuit wiring, No. 14 AWG for control and signal wiring, except where shown otherwise on the Contract Drawings.

K. Conductor Identification:

1. All wires and cables shall be identified by circuit numbers in all cabinets, boxes, manholes, wireways and other enclosures and access locations and at all terminal points.

2. Circuit designations shall be as shown on the Contract Drawings.

3. The tag ties shall be wrapped around all conductors comprising the circuit or feeder to be identified.

4. Cable Tags:

   a. Dry Locations: Fiber Tags, 1/16 inch thick and 3/4 inch wide, indented with letters and numbers approximately 5/16 inch high, fastened to cables with nylon cable ties.

   b. Wet Locations: Stainless steel grade 304 or 316 metal tags, No. 28 gauge and 3/4-inch wide, embossed with letters and numbers approximately 5/16 inch high, fastened to the cable or wire with nylon cable ties.

5. Color coding and phasing shall be required on all new and/or altered electrical work. All conductors shall be identified at all points of termination by color coded conductors and/or by colored, gummed or plastic tape applied to the conductors as follows:

   a. 240/120V
      1) Single phase conductors shall have Black, Red or Blue Bands

   b. All neutral Conductors shall be white.

   c. All equipment ground wires shall be green.

   d. The same colors shall be used for the same phases throughout the entire project.

6. All existing live circuits shall remain in operating condition while new cables are being installed and during new duct and conduit construction. Disconnection of any circuit wires or cables, will be permitted only at such time and for such length of time as directed by the Owner.

L. Splices and Terminations:

1. General: Splices and terminations shall be made in outlet, junction or pull boxes in wireways or in equipment cabinets and shall be made mechanically and electrically secure, using proper splicing and termination equipment and components as specified herein.

2. Ends of cables shall be sealed watertight until ready for terminations.

3.04 LIGHT POST FOUNDATIONS

A. All bases shall be installed at the location as shown on the plan except as approved deviations are required to meet field conditions. All bases will be set plumb and true to grade. All bases shall be installed to a depth of 2 inches above finish grade, and under NO conditions may any portion of the securing hardware, i.e. threaded rods or nuts, be concealed below grade.

B. The Contractor shall carefully mark the proposed location of the concrete base and then he shall determine if any utilities or underground or overhead obstruction will prevent the installation at this location. Similar marking shall be done for the conduit runs to the base. If such an obstruction is evident the Contractor shall request permission from the Engineer to move or adjust the location of the base.

C. If no obstruction is apparent at the proposed base location the Contractor shall make an opening not to exceed forty-two inches by forty-two inches to be accomplished with hand digging. Mechanical excavating equipment may be used if approved by the Engineer and the excavation may exceed forty-two inches by forty-two inches limits; if this means is used, the Contractor must provide a six inch cushion of gravel borrow under the base and shall backfill using gravel borrow well tamped in six inch lifts; compacted to 95% of the maximum dry density prior to the installation of the pre-cast foundation. Gravel backfill shall be placed in the area surrounding the base, compacted to 95% of the maximum dry density in 6 inch lifts, for a distance of 5 feet surrounding the base.

D. The backfill tamping shall be accomplished by means of a pneumatic hammer equipped with a round dirt tamping pad with a minimum diameter of six inches driven by an air compressor with a minimum of 100 psi pressure. The use of an impactor attachment on a standard backhoe with a dirt tamping pad may substitute for the pneumatic hammer with the permission of the Engineer. Use of a vibrator type compactor around the pre-cast subbase or handhole is prohibited.

E. If the Contractor encounters no difficulty in the excavation and the soil conditions are suitable to support the base, the Contractor shall install a standard pre-cast concrete sub-base furnished by the Contractor. The top of the base must be level and installed as indicated on the plans.

3.05 LIGHTING SYSTEM

A. All luminaires, boxes, and electrical equipment components of the lighting system shall be handled in loading, unloading and erecting in such a manner that they will not be damaged. Any parts that are damaged due to the Contractor's operation shall be repaired or replaced at the Contractor's expense.

B. All installed lights shall be set true and shall be in proper alignment in both vertical and horizontal planes in accordance with the aiming angles recommended by the manufacturer.

C. All lights shall be free of light leaks, warps, dents, crazing, cracks, or other faults which are a result of poor workmanship in installation.

D. All lights, lamps, controls, and other appurtenances that are installed by the Contractor shall be completely operable and in clean condition. Failure by the Contractor to comply with these requirements shall be cause for replacement at the expense of the Contractor.

E. All lights shall be U.L. approved prior to the bidding of this Contract, and shall bear the U.L. label. No exceptions shall be made. If required by the Landscape Architect, the Contractor shall furnish notarized letters substantiating the validity of the U.L. label. Such letter shall contain the U.L. test number and the date when the fixture was approved by U.L.

F. Contractor shall provide manufacturer's service technicians, appropriate equipment and all labor to make necessary field adjustments. Service technicians shall make all necessary adjustments within the physical constraints of the lighting system approved by the Landscape Architect. Field adjustments of lighting alignment and position shall be approved by the Owner and the Landscape Architect.

G. General Contractor shall coordinate all issues and components of paving, lighting, cast-in-place concrete, precast concrete, unit masonry piers, and fencing to ensure fully integrated systems. Coordination shall include but not be limited to scheduling, field measurement, shop drawings, delivery, storage, installation, testing, repairs and replacements.

3.06 GROUNDING SYSTEM TESTING

A. Testing: Engage a qualified testing agency to perform the following field quality-control testing:

B. Testing: Perform the following field quality-control testing:

1. After installing grounding system but before permanent electrical circuitry has been energized, test for compliance with requirements.

2. Test completed grounding system at each location where a maximum ground-resistance level is specified, at service disconnect enclosure grounding terminal, and at ground test wells. Measure ground resistance not less than two full days after the last trace of precipitation, and without the soil being moistened by any means other than natural drainage or seepage and without chemical treatment or other artificial means of reducing natural ground resistance. Perform tests, by the fall-of-potential method according to IEEE 81.

   a. Provide drawings locating each ground rod and ground rod assembly and other grounding electrodes, identify each by letter in alphabetical order, and key to the record of tests and observations. Include the number of rods driven and their depth at each location and include observations of weather and other phenomena that may affect test results. Describe measures taken to improve test results.

   b. All Ground Rods: 10 ohms.

C. Excessive Ground Resistance: If resistance to ground exceeds specified values, notify Engineer promptly and include recommendations to reduce ground resistance.

3.07 MANUFACTURING TESTS, FIELD TESTS, AND INSPECTION

A. Provide labor, installation, supervision, test equipment, material, power supplies, devices, etc. required to perform the work indicated.

B. Test and inspect all parts of the Work provided under this Section and as required by manufacturers, codes, standards or authorities having jurisdiction. Conduct all tests and inspections to the complete satisfaction of the Landscape Architect, Engineer and all authorities. Tests shall be completed and Electrical work 100 percent operational including any interfaces with other systems prior to performing Acceptance Demonstrations. Notify the Landscape Architect, Engineer, the Owner via General Contractor, and all involved authorities at least one week (seven days) prior to testing or inspection. Do not cover work prior to testing or inspection. Testing shall be completed prior to Substantial Completion.

C. Prior to the date of Substantial Completion and Acceptance Demonstrations, furnish the Landscape Architect, or Engineer, with certificates of testing and inspection for all systems furnished or installed under this Section indicating the approval of all authorities having jurisdiction, manufacturers and a letter from the installer stating conformance with all requirements of the Contract Documents.

D. All systems shall test free from short circuits and grounds, shall be free from mechanical and electrical defects, and shall show an insulation resistance between phase conductors and ground of not less than the values recommended by the manufacturers.

E. Test all circuits and for proper neutral and grounding connections.

F. Lighting fixtures shall be tested with specified lamps in place for not less than ten hours; the fixtures may be checked in sections.

G. Testing recommended by manufacturers shall be required; the Engineer may waive this requirement in writing.

H. Failure or defects in workmanship or materials revealed by tests or inspection shall be corrected promptly and retested. Defective material shall be replaced at no additional expense to the Owner.

I. Provide all temporary connections, necessary testing equipment, labor and materials, required for the testing of the systems and equipment. All systems shall be prepared for testing and protected from damage. The cost of all tests shall be included in the contract price.

J. Test systems installed for proper operation and adherence to specifications.

K. The equipment grounding shall be checked to insure continuity of the ground return path.

L. Provide a written report on all testing and device settings. Include a copy in the Operation and Maintenance Manual.

3.08 ACCEPTANCE DEMONSTRATIONS

A. Systems installed under this section shall be demonstrated to the Owner, Landscape Architect and Engineer. Demonstrations are in addition to necessary testing and training sessions. Notify all parties at least 7 days prior to the scheduled demonstration. Schedule demonstrations in cooperation with and at times convenient to all parties and so as to not disturb ongoing activities.

B. Systems shall be tested prior to the demonstrations and each system shall be fully operational and tested prior to arranging the Acceptance Demonstration. Final payments will be withheld until a satisfactory demonstration is provided for all systems indicated or requested.

C. If the demonstration is not totally complete, performing all functions, features and connections or interfaces with other systems, or if there is a failure during the demonstration, additional demonstrations shall be arranged. Provide and pay for all costs, labor and expenses incurred for all attendees for each additional demonstration required for acceptance and demonstration of complete system operation.

D. Demonstrations shall be scheduled in ample time to complete all activities prior to final acceptance and Owner occupancy. Demonstrations shall take place at least 30 days prior to the scheduled project completion date and 30 days prior to Owner's use and occupancy.

E. As a minimum, provide demonstrations for systems indicated under "Work Included" under Part One of the Specifications. Provide demonstrations of additional systems as requested by the Owner, Landscape Architect or Engineer.

3.09 PROJECT OWNER COORDINATION

A. Prior to Substantial Completion of the project and in ample time to address and resolve any coordination issues, request and arrange meetings between the Owner, Owner's Vendors and Consultants, Landscape Architect, Engineer and General Contractor to discuss the Scope of Work for each system being provided and the interface required for a fully functional and operational system upon project completion. Initial meetings shall be scheduled three months prior to the scheduled Substantial Completion date or as soon as Submittals are submitted and reviewed for projects with shorter schedules.

B. At these meetings the required interface with the Owner shall be reviewed, requests for information required to complete programming or for coordination shall be presented and system operation and philosophy shall be discussed.

C. Additional meetings shall be held as requested by any party so that all issues are resolved and with the goal and intent being that all systems are fully operational and functional upon project Substantial Completion and that the responsibility for all components required is clearly established.

3.10 CLEANING UP

A. Upon completion of all work, lamping, and testing, thoroughly inspect all exposed portions of the electrical installation and completely remove all exposed labels, markings, and foreign material.

B. The interior of all boxes and cabinets shall be left clean; exposed surfaces shall be cleaned and plated surfaces polished.

C. Repair damage to finish surfaces resulting from work under this section.

D. Remove material and equipment from areas of work and storage areas.

E. All fixtures shall be clean from dirt, dust, and fingerprints prior to final acceptance.

F. Touch up all damaged pre-finished equipment using materials and methods recommended by the Manufacturer.

3.11 PROJECT CLOSEOUT

A. Provide close out submittals as required herein and in Division One including the following close out submittals.

1. Operation and Maintenance Manuals

2. Record Drawings.

3. Test Reports.

4. Extra Materials.

B. Obtain written receipts of acceptance close out submittals submitted. Receipts shall specifically detail what is being delivered (description, quantity and specification section) and shall be dated and signed by firm delivering materials and by the Landscape Architect.

PART 4 METHOD OF MEASUREMENT AND PAYMENT

4.01 METHOD OF MEASUREMENT AND BASIS OF PAYMENT

A. The lighting system and electrical work as shown on the Drawings shall be paid under one lump sum "Electrical Work". Work under this item shall include conduit, wire, service connection, grounding conductors, cable splicing and terminations, wire connection, underground warning tape, luminaires, lighting posts, lighting post foundations, driver vaults, lighting control cabinet and foundation, irrigation connection, excavation, backfill, gravel, sand, all labor, materials, equipment, tools, and incidentals required to provide a fully operational, tested, electrical system, to the satisfaction of the Owner.

B. Sand, concrete and rebar required for Electrical Work will not be measured separately and shall be included in the bid price for Electrical Work.

4.02 PAYMENT

A. Payment for Electrical Work shall be at the contract unit price per LUMP SUM which price shall constitute full compensation for furnishing all labor, equipment, tools, and incidentals necessary to complete this item of work, complete, in place, and accepted by the Owner

4.03 PAYMENT ITEMS

ITEM NO.	ITEM	UNIT
337173	ELECTRICAL WORK	LUMP SUM

END OF SECTION

J:\Fay Spofford & Thorndike\Town Brook Enhancement Open Space\CAD\Planset\TBRP_OS-TS.dwg

Site Plans
for
Town Brook Open Space Improvements
Revere Road, Quincy, Massachusetts

Issued For: Bidding
Date Issued: April 26, 2013
Latest Issue: April 26, 2013

SHEET INDEX

EBI Consulting Drawings

SHEET NO.	SHEET TITLE	LATEST ISSUE
C-1	Title Sheet	4/26/2013
C-2	Legend & General Notes	4/26/2013
C-3	Site Plan	4/26/2013
C-4	Detail Sheet	4/26/2013

Ulrich Bachand Landscape Architecture Drawings

SHEET NO.	SHEET TITLE	LATEST ISSUE
L-1	Layout & Materials Plan	4/26/2013
L-2	Landscape Plan	4/26/2013
L-3	Landscape Details Sheet 1	4/26/2013
L-4	Landscape Details Sheet 2	4/26/2013

Fay, Spofford & Thorndike Drawings

SHEET NO.	SHEET TITLE	LATEST ISSUE
L-5	Irrigation Plan	4/26/2013
L-6	Irrigation Details 1 of 2	4/26/2013
L-7	Irrigation Details 2 of 2	4/26/2013
E-1	Electrical Layout	4/26/2013
E-2	Electrical Details	4/26/2013
E-3	Electrical Details	4/26/2013

Dig Safe Systems, Inc.
1-888-DIG-SAFE
(1-888-344-7233)

LOCUS MAP

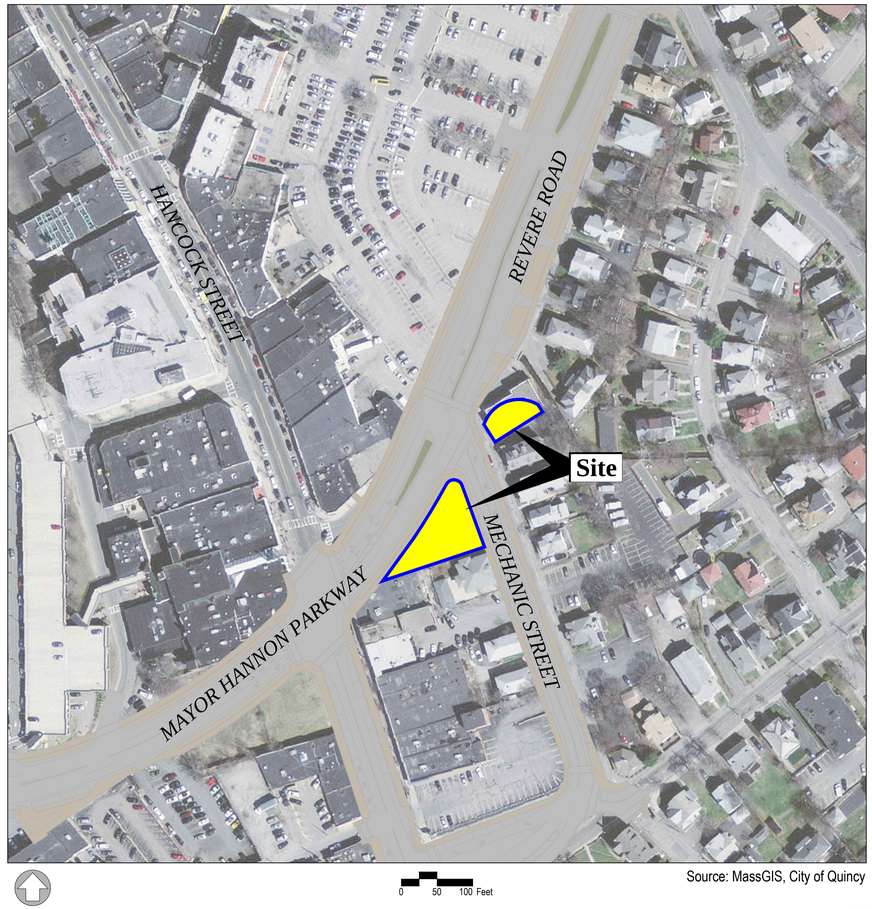

Source: MassGIS, City of Quincy

PROPERTY INFORMATION

PROPONENT/OWNER
City of Quincy
1305 Hancock Street
Quincy, MA 02169

ASSESSOR'S INFORMATION
1143-33, 1145-6

PROJECT TEAM

CIVIL ENGINEER
EBI Consulting
environmental | engineering | due diligence
21 B Street | Burlington, MA 01803
Tel: 781.273.2500 | Fax: 781.273.3311
www.ebiconsulting.com

LANDSCAPE ARCHITECT
Ulrich Bachand Landscape Architecture LLC
156 Cabot Street, Unit 2A
Beverly, MA 01915
Tel: (978) 922-2661

ELECTRICAL ENGINEER
FAY, SPOFFORD & THORNDIKE
5 Burlington Woods Drive
Burlington, MA 01803
Tel: (781) 221-1000
ENGINEERS FST Since 1914

EBI Consulting
environmental | engineering | due diligence
21 B Street | Burlington, MA 01803
Tel: 781.273.2500 | Fax: 781.273.3311
www.ebiconsulting.com

COMMONWEALTH OF MASSACHUSETTS KARLIS SKULTE No. 47705 REGISTERED PROFESSIONAL ENGINEER 4/26/2013

ENGINEER STAMP/SIGNATURE

PREPARED FOR:
City of Quincy
1305 Hancock Street
Quincy, Massachusetts 02619
Tel: (617) 376-1362
Fax: (617) 376-1097
www.quincyma.gov

THIS DOCUMENT IS THE DESIGN PROPERTY AND COPYRIGHT OF EBI CONSULTING, INC. AND FOR THE EXCLUSIVE USE BY THE TITLE CLIENT. ANY DUPLICATION OR USE WITHOUT EXPRESS WRITTEN CONSENT OF THE CREATOR IS STRICTLY PROHIBITED.

DRAWING SCALES NOTED ARE FOR 24" x 36" SIZE PRINTED MEDIA ONLY. ALL OTHER PRINTED SIZES ARE DEEMED "NOT TO SCALE".

SUBMITTALS

NO.	DATE	DESCRIPTION	BY

DATE: April 26, 2013
PROJECT NUMBER: 16130005

PROJECT TITLE:
Town Brook Open Space Improvements
Revere Road
Quincy, Massachusetts 02169
Norfolk County

ISSUED FOR:
Bidding
(Not Approved for Construction)

SHEET TITLE:
Title Sheet

SCALE: N.T.S.
DESIGNED BY: JVC/MVG
CHECKED BY: KPS
SHEET NO: C-1

LEGEND

General

- PROPERTY LINE
- RIGHT-OF-WAY
- INTERNAL LOT LINE
- ABUTTING PROPERTY LINE
- EASEMENT
- BLSF — BORDERING LAND SUBJECT TO FLOODING
- 200'RA — 200' RIVERFRONT AREA
- 100'BZ — 100' WETLAND BUFFER ZONE
- NDZ — NO DISTURB ZONE
- LIMIT OF DISTURBANCE
- BL 10 EL=98.5 — BORING LOCATION
- MW 2 EL=100.5 — MONITORING WELL
- TP 5 EL=112.7 — TEST PIT LOCATION
- MATCHLINE

Layout and Materials

- 100'–6" — BUILDING
- EN — BUILDING ENTRANCE
- LD — LOADING DOCK
- BUILDING SETBACK
- 50+00 — BASELINE
- LIMIT OF WORK
- SAWCUT LINE
- GRAVEL ROAD
- EOP — EDGE OF PAVEMENT
- VGC — VERTICAL GRANITE CURB
- VGC PCC — LIMIT OF CURB TYPE
- VGC — CONCRETE SIDEWALK
- VGC — PAVER SIDEWALK
- LANDSCAPE BUFFER
- PARKING SETBACK
- 50 — TOTAL PARKING COUNT
- 20 — STANDARD STALL COUNT
- C10 — COMPACT STALL COUNT
- ACCESSIBLE PARKING
- VAN — VAN ACCESSIBLE PARKING
- ACCESSIBLE CURB RAMP
- CROSSWALK
- WHEEL STOP
- DIRECTIONAL SIGN
- BOLLARD
- PEDESTRIAN LIGHT POLE
- PARKING LOT LIGHT POLE
- UTILITY POLE
- GUY POLE
- OHW — OVERHEAD WIRE
- RETAINING WALL
- STONE WALL
- BARB WIRE FENCE
- CHAIN LINK FENCE
- CONSTRUCTION FENCE
- STOCKADE FENCE
- STEEL GUARDRAIL
- WOOD GUARDRAIL
- PATH
- TREE LINE

Erosion Control

- EROSION CONTROL BARRIER
- STRAW BALES
- STABILIZED CONSTRUCTION EXIT
- SILT SACK SEDIMENT TRAP

Grading

- 10 — MAJOR CONTOUR
- 1 — MINOR CONTOUR
- 100.5 TC 100.0 BC — SPOT ELEVATION
- DETENTION BASIN
- SWALE
- BIORETENTION AREA
- 100-YEAR FLOOD ELEVATION
- 10-YEAR FLOOD ELEVATION

Drainage

- 12"RCP — DRAIN
- 6"HDPE — ROOF DRAIN
- 6"PVC — UNDER DRAIN
- SINGLE CATCH BASIN
- DOUBLE CATCH BASIN
- D — DRAIN MANHOLE
- CO — CLEANOUT
- FLARED END SECTION
- HEADWALL
- RIPRAP

Utilities

- 6"S — SEWER
- FM — FORCE MAIN
- S — SEWER MANHOLE
- PLUG OR CAP
- 6"W — WATER
- 2"DW — DOMESTIC WATER
- 6"FP — FIRE PROTECTION
- CS — CURB STOP AND BOX
- HYD — FIRE HYDRANT
- PIV — POST INDICATOR VALVE
- 8"W 6"W — REDUCER
- SHUT-OFF VALVE
- SIAMESE CONNECTION
- TSV — TAPPING SLEEVE AND VALVE
- WV — WATER VALVE AND BOX
- WM — WATER METER
- G — GAS
- GG — GAS GATE
- GM — GAS METER
- UGE — UNDERGROUND ELECTRIC
- EMH — ELECTRIC MANHOLE
- EM — ELECTRIC METER
- TRANSFORMER PAD
- UGT — UNDERGROUND TELEPHONE
- TMH — TELEPHONE MANHOLE
- CATV — CABLE TV
- FO — FIBER OPTICS
- CONDUIT
- HH — HAND HOLE
- PB — PULL BOX

ABBREVIATIONS

General

ACR	ACCESSIBLE CURB RAMP
ADA	AMERICANS WITH DISABILITIES ACT
APPROX	APPROXIMATE
ARCH	ARCHITECTURAL
BC	BOTTOM OF CURB
BCB	BITUMINOUS CONCRETE BERM
BCC	BITUMINOUS CONCRETE CURB
BIT	BITUMINOUS
BLDG	BUILDING
BLSF	BORDERING LAND SUBJECT TO FLOODING
BOT	BOTTOM
BC	BOTTOM OF CURB
BS	BOTTOM OF SLOPE
BW	BOTTOM OF WALL
BWLL	BROKEN WHITE LANE LINE
CLF	CHAIN LINK FENCE
CONC	CONCRETE
DPW	DEPARTMENT OF PUBLIC WORKS
DYCL	DOUBLE YELLOW CENTER LINE
ECC	EXTRUDED CONCRETE CURB
ELEV	ELEVATION
EOP	EDGE OF PAVEMENT
EX	EXISTING
EXIST	EXISTING
FDN	FOUNDATION
FFE	FIRST FLOOR ELEVATION
FG	FINISHED GRADE
GRAN	GRANITE
GTD	GRADE TO DRAIN
HP	HIGH POINT
LA	LANDSCAPE AREA
LOD	LIMIT OF DISTURBANCE
LOW	LIMIT OF WORK
LP	LOW POINT
MAX	MAXIMUM
MCC	MONOLITHIC CONCRETE CURB
MIN	MINIMUM
NDZ	NO DISTURB ZONE
NIC	NOT IN CONTRACT
NTS	NOT TO SCALE
PCC	PRECAST CONCRETE CURB
PL	PROPERTY LINE
PROP	PROPOSED
R	RADIUS
RA	RIVERFRONT AREA
REM	REMOVE
RET	RETAIN
ROW	RIGHT-OF-WAY
R&D	REMOVE AND DISPOSE
R&R	REMOVE AND RESET
SGE	SLOPED GRANITE EDGING
SWEL	SOLID WHITE EDGE LINE
SWLL	SOLID WHITE LANE LINE
TC	TOP OF CURB
TR	TRASH BAY
TS	TOP OF SLOPE
TW	TOP OF WALL
TYP	TYPICAL
VGC	VERTICAL GRANITE CURB

Utilities

ABAN	ABANDON
ADJ	ADJUST
CATV	CABLE TV
CIP	CAST IRON PIPE
CMP	CORRUGATED METAL PIPE
CO	CLEANOUT
COND	CONDUIT
CS	CURB STOP AND BOX
DIA	DIAMETER
DCB	DOUBLE CATCH BASIN
DET	DETENTION
DIP	DUCTILE IRON PIPE
DMH	DRAIN MANHOLE
DW	DOMESTIC WATER
EMH	ELECTRIC MANHOLE
FA	FIRE ALARM
FES	FLARED END SECTION
FP	FIRE PROTECTION
FM	FORCE MAIN
FO	FIBER OPTICS
F&C	FRAME AND COVER
F&G	FRAME AND GRATE
GG	GAS GATE
GI	GUTTER INLET
GM	GAS METER
GT	GREASE TRAP
HDPE	HIGH DENSITY POLYETHYLENE PIPE
HH	HAND HOLE
HW	HEADWALL
HYD	HYDRANT
INF	INFILTRATION
INV	INVERT ELEVATION
I=	INVERT ELEVATION
MES	METAL END SECTION
MW	MONITORING WELL
OHW	OVERHEAD WIRE
PB	PULL BOX
PIV	POST INDICATOR VALVE
PVC	POLYVINYLCHLORIDE PIPE
RCP	REINFORCED CONCRETE PIPE
RD	ROOF DRAIN
R=	RIM ELEVATION
SAS	SOIL ABSORBTION SYSTEM
SCB	SINGLE CATCH BASIN
SLP	SITE LIGHT POLE
SMH	SEWER MANHOLE
SYS	SYSTEM
TMH	TELEPHONE MANHOLE
TSV	TAPPING SLEEVE, VALVE, AND BOX
UD	UNDERDRAIN
UG	UNDERGROUND
UP	UTILITY POLE
WM	WATER METER
WQI	WATER QUALITY INLET
WQS	WATER QUALITY STRUCTURE
WV	WATER VALVE AND BOX

GENERAL NOTES

General Information:

1. CONTRACTOR SHALL NOTIFY "DIG-SAFE" (1-888-344-7233) AT LEAST 72 HOURS BEFORE EXCAVATING.
2. CONTRACTOR SHALL BE RESPONSIBLE FOR SITE SECURITY AND JOB SAFETY, CONSTRUCTION ACTIVITIES SHALL BE IN ACCORDANCE WITH OSHA STANDARDS AND LOCAL REQUIREMENTS.
3. ACCESSIBLE ROUTES, PARKING SPACES, RAMPS, SIDEWALKS, AND WALKWAYS SHALL BE CONSTRUCTED IN CONFORMANCE WITH THE FEDERAL AMERICANS WITH DISABILITIES ACT AND WITH STATE AND LOCAL LAWS AND REGULATIONS (WHICHEVER ARE MORE STRINGENT).
4. AREAS DISTURBED DURING CONSTRUCTION AND NOT RESTORED WITH IMPERVIOUS SURFACES (BUILDINGS, PAVEMENTS, WALKS, ETC.) SHALL RECEIVE 6 INCHES LOAM AND SEED.
5. WORK WITHIN THE LOCAL RIGHTS-OF-WAY SHALL CONFORM TO LOCAL MUNICIPAL STANDARDS. WORK WITHIN SITE RIGHTS-OF-WAY SHALL CONFORM TO THE LATEST EDITION OF THE STATE HIGHWAY DEPARTMENTS STANDARD SPECIFICATIONS FOR HIGHWAYS AND BRIDGES.
6. UPON AWARD OF CONTRACT, CONTRACTOR SHALL MAKE NECESSARY CONSTRUCTION NOTIFICATIONS AND APPLY FOR AND OBTAIN NECESSARY PERMITS, PAY FEES, AND POST BONDS ASSOCIATED WITH THE WORK INDICATED ON THE DRAWINGS, IN THE SPECIFICATIONS, AND IN THE CONTRACT DOCUMENTS. DO NOT CLOSE OR OBSTRUCT ROADWAYS, SIDEWALKS, AND FIRE HYDRANTS, WITHOUT APPROPRIATE PERMITS.
7. TRAFFIC SIGNAGE AND PAVEMENT MARKINGS SHALL CONFORM TO THE MANUAL OF UNIFORM TRAFFIC CONTROL DEVICES (M.U.T.C.D.).
8. AREAS OUTSIDE THE LIMITS OF PROPOSED WORK DISTURBED BY THE CONTRACTOR'S OPERATIONS SHALL BE RESTORED BY THE CONTRACTOR TO THEIR ORIGINAL CONDITION AT THE CONTRACTOR'S EXPENSE.
9. IN THE EVENT THAT SUSPECTED CONTAMINATED SOIL, GROUNDWATER, AND OTHER MEDIA ARE ENCOUNTERED DURING EXCAVATION AND CONSTRUCTION ACTIVITIES BASED ON VISUAL, OLFACTORY, OR OTHER EVIDENCE, THE CONTRACTOR SHALL STOP WORK IN THE VICINITY OF THE SUSPECT MATERIAL TO AVOID FURTHER SPREADING OF THE MATERIAL, AND SHALL NOTIFY THE OWNER IMMEDIATELY SO THAT THE APPROPRIATE TESTING AND SUBSEQUENT ACTION CAN BE TAKEN.
10. CONTRACTOR SHALL PREVENT DUST, SEDIMENT, AND DEBRIS FROM EXITING THE SITE AND SHALL BE RESPONSIBLE FOR CLEANUP, REPAIRS, AND CORRECTIVE ACTION IF SUCH OCCURS.
11. DAMAGE RESULTING FROM CONSTRUCTION LOADS SHALL BE REPAIRED BY THE CONTRACTOR AT NO ADDITIONAL COST TO THE OWNER.
12. CONTRACTOR SHALL CONTROL STORMWATER RUNOFF DURING CONSTRUCTION TO PREVENT ADVERSE IMPACTS TO OFF SITE AREAS, AND SHALL BE RESPONSIBLE TO REPAIR RESULTING DAMAGES, IF ANY, AT NO COST TO OWNER.

Existing Conditions:

1. BASE PLAN: THE EXISTING CONDITIONS DEPICTED IN THIS PLAN SET WERE COMPILED FROM THE FOLLOWING SOURCES:
   - 1.1. CITY OF QUINCY - CONCOURSE ROADWAY PROJECT BASE PLAN
   - 1.2. VS LAND DATA - SUPPLEMENTAL ON THE GROUND SURVEY INFORMATION
   - 1.3. J.DERENZO CONTRACTORS CO. - CONCOURSE ROADWAY AS-BUILT PLANS
   - 1.4. EBI - TOWN BROOK ENHANCEMENT PROJECT DESIGN PLANS
2. TOPOGRAPHY: ELEVATIONS REFERENCED IN THESE DRAWINGS REFLECT NAVD 1988 ELEVATIONS. ELEVATIONS REFERENCED FROM QUINCY CENTER CONCOURSE-SECTION-2 HAVE BEEN ADJUSTED BY PREVIOUS DATUM (NAVD 1929) RELATIONSHIP ADJUSTMENTS SHOWN HEREON.
3. HORIZONTAL DATUM IS BASED ON MASS GRID SYSTEM, NAD 1983.
4. DATUM RELATIONSHIP BENCHMARKS MUST BE ESTABLISHED WITHIN THE PROXIMITY OF THE LIMIT OF WORK PRIOR TO THE BEGINNING OF CONSTRUCTION.
5. BENCHMARKS MUST BE SET BY A MASSACHUSETTS REGISTERED LAND SURVEYOR.
6. GEOTECHNICAL DATA INCLUDING TEST PIT AND BORING LOCATIONS AND ELEVATIONS WERE OBTAINED BY HALEY & ALDRICH, INC. OR AS OTHERWISE NOTED.
7. CONCOURSE ROADWAY CENTERLINE INFORMATION OBTAINED FROM DESIGN FILES PROVIDED BY THE CITY OF QUINCY, FOR THE "QUINCY CENTER CONCOURSE SECTION 2" PROJECT.
8. THE LOCATION OF ALL UNDERGROUND UTILITIES SHOWN HEREON ARE APPROXIMATE AND ARE BASED ON THE FIELD LOCATION OF ALL VISIBLE STRUCTURES SUCH AS CATCH BASINS, MANHOLES, WATER GATES, ETC. AND COMPILED FROM PLANS SUPPLIED BY VARIOUS UTILITY COMPANIES AND GOVERNMENT AGENCIES. THE CONTRACTOR SHALL VERIFY ALL EXISTING UTILITIES PRIOR TO CONSTRUCTION.

Erosion Control:

1. PRIOR TO STARTING ANY OTHER WORK ON THE SITE, THE CONTRACTOR SHALL NOTIFY APPROPRIATE AGENCIES AND SHALL INSTALL EROSION CONTROL MEASURES AS SHOWN ON THE PLANS AND AS IDENTIFIED IN FEDERAL, STATE, AND LOCAL APPROVAL DOCUMENTS PERTAINING TO THIS PROJECT.
2. CONTRACTOR SHALL INSPECT AND MAINTAIN EROSION CONTROL MEASURES, AND REMOVE SEDIMENT THEREFROM ON A WEEKLY BASIS AND WITHIN TWELVE HOURS AFTER EACH STORM EVENT AND DISPOSE OF SEDIMENTS IN AN UPLAND AREA SUCH THAT THEY DO NOT ENCUMBER OTHER DRAINAGE STRUCTURES AND PROTECTED AREAS.
3. CONTRACTOR SHALL BE FULLY RESPONSIBLE TO CONTROL CONSTRUCTION SUCH THAT SEDIMENTATION SHALL NOT AFFECT REGULATORY PROTECTED AREAS, WHETHER SUCH SEDIMENTATION IS CAUSED BY WATER, WIND, OR DIRECT DEPOSIT.
4. CONTRACTOR SHALL PERFORM CONSTRUCTION SEQUENCING SUCH THAT EARTH MATERIALS ARE EXPOSED FOR A MINIMUM OF TIME BEFORE THEY ARE COVERED, SEEDED, OR OTHERWISE STABILIZED TO PREVENT EROSION.
5. UPON COMPLETION OF CONSTRUCTION AND ESTABLISHMENT OF PERMANENT GROUND COVER, CONTRACTOR SHALL REMOVE AND DISPOSE OF EROSION CONTROL MEASURES AND CLEAN SEDIMENT AND DEBRIS FROM ENTIRE DRAINAGE AND SEWER SYSTEMS.

Demolition:

1. CONTRACTOR SHALL REMOVE AND DISPOSE OF EXISTING MANMADE SURFACE FEATURES WITHIN THE LIMIT OF WORK INCLUDING BUILDINGS, STRUCTURES, PAVEMENTS, SLABS, CURBING, FENCES, UTILITY POLES, SIGNS ETC. UNLESS INDICATED OTHERWISE ON THE DRAWINGS, REMOVE AND DISPOSE OF EXISTING UTILITIES, FOUNDATIONS AND UNSUITABLE MATERIAL BENEATH AND FOR A DISTANCE OF 10 FEET BEYOND THE PROPOSED BUILDING FOORTPRINT INCLUDING EXTERIOR COLUMNS.
2. EXISTING UTILITIES SHALL BE TERMINATED, UNLESS OTHERWISE NOTED, IN CONFORMANCE WITH LOCAL, STATE, AND INDIVIDUAL UTILITY COMPANY STANDARD SPECIFICATIONS AND DETAILS. THE CONTRACTOR SHALL COORDINATE UTILITY SERVICE DISCONNECTS WITH THE UTILITY REPRESENTATIVES.
3. CONTRACTOR SHALL DISPOSE OF DEMOLITION DEBRIS IN ACCORDANCE WITH APPLICABLE FEDERAL, STATE AND LOCAL REGULATIONS, ORDINANCES AND STATUES.

Layout and Materials:

1. DIMENSIONS ARE FROM THE FACE OF CURB, FACE OF BUILDING, FACE OF WALL, AND CENTER LINE OF PAVEMENT MARKINGS, UNLESS OTHERWISE NOTED.
2. CURBING SHALL BE VERTICAL GRANITE CURB (VGC) AND CURB RADII SHALL BE THREE FEET (3') WITHIN THE SITE, UNLESS OTHERWISE INDICATED ON THE SITE PLANS.
3. PROPOSED BOUNDS AND ANY EXISTING PROPERTY LINE MONUMENTATION DISTURBED DURING CONSTRUCTION SHALL BE SET OR REST BY A PROFESSIONAL LICENSED SURVEYOR.
4. SYMBOLS AND LEGENDS OF PROJECT FEATURES ARE GRAPHIC REPRESENTATIONS AND ARE NOT NECESSARILY SCALED TO THEIR ACTUAL DIMENSIONS OR LOCATIONS ON THE DRAWINGS, THE CONTRACTOR SHALL REFER TO THE DETAIL SHEET DIMENSIONS, MANUFACTURER'S LITERATURE, SHOP DRAWINGS AND FIELD MEASUREMENTS OF SUPPLIED PRODUCTS FOR LAYOUT OF THE PROJECT FEATURES.
5. CONTRACTOR SHALL NOT RELY SOLELY ON ELECTRONIC VERSIONS OF PLANS, SPECIFICATIONS, AND DATA FILES THAT ARE OBTAINED FROM THE DESIGNERS, BUT SHALL VERIFY LOCATION OF PROJECT FEATURES IN ACCORDANCE WITH THE PAPER COPIES OF THE PLANS AND SPECIFICATIONS THAT ARE SUPPLIED AS PART OF THE CONTRACT DOCUMENTS.

Utilities:

1. THE LOCATIONS, SIZES, AND TYPES OF EXISTING UTILITIES ARE SHOWN AS AN APPROXIMATE REPRESENTATION ONLY. THE OWNER OR IT'S REPRESENTATIVES HAVE NOT INDEPENDENTLY VERIFIED THIS INFORMATION AS SHOWN ON THE PLANS. THE UTILITY INFORMATION SHOWN DOES NOT GUARANTEE THE ACTUAL EXISTENCE, SERVICEABILITY, OR OTHER DATA CONCERNING THE UTILITIES, NOR DOES IT GUARANTEE AGAINST THE POSSIBILITY THAT ADDITIONAL UTILITIES MAY BE PRESENT THAT ARE NOT SHOWN ON THE PLANS. PRIOR TO ORDERING MATERIALS AND BEGINNING CONSTRUCTION, THE CONTRACTOR SHALL VERIFY AND DETERMINE THE EXACT LOCATIONS, SIZES, AND ELEVATIONS OF THE POINTS OF ALL CONNECTIONS TO EXISTING UTILITIES AND, SHALL CONFIRM THAT THERE ARE NO INTERFERENCES WITH EXISTING UTILITIES AND THE PROPOSED UTILITY ROUTES, INCLUDING ROUTES WITHIN THE PUBLIC RIGHTS OF WAY.
2. WHERE AN EXISTING UTILITY IS FOUND TO CONFLICT WITH THE PROPOSED WORK, OR EXISTING CONDITIONS DIFFER FORM THOSE SHOWN SUCH THAT THE WORK CANNOT BE COMPLETED AS INTENDED, THE LOCATION, ELEVATION, AND SIZE OF THE UTILITY SHALL BE ACCURATELY DETERMINED WITHOUT DELAY BY THE CONTRACTOR, AND THE INFORMATION FURNISHED IN WRITING TO THE OWNER'S REPRESENTATIVE FOR THE RESOLUTION OF THE CONFLICT AND CONTRACTOR'S FAILURE TO NOTIFY PRIOR TO PERFORMING ADDITIONAL WORK RELEASES OWNER FROM OBLIGATIONS FOR ADDITIONAL PAYMENTS WHICH OTHERWISE MAY BE WARRANTED TO RESOLVE THE CONFLICT.
3. CONTRACTOR SHALL MAKE ARRANGEMENTS FOR AND SHALL BE RESPONSIBLE FOR PAYING FEES FOR POLE RELOCATION AND FOR THE ALTERATION AND ADJUSTMENT OF GAS, ELECTRIC, TELEPHONE, FIRE ALARM, AND ANY OTHER PRIVATE UTILITIES, WHETHER WORK IS PERFORMED BY CONTRACTOR OR BY UTILITIES COMPANY.
4. UTILITY PIPE MATERIALS SHALL BE AS FOLLOWS, UNLESS OTHERWISE NOTED ON THE PLAN:
   - A. STORM DRAINAGE PIPES SHALL BE HIGH DENSITY POLYETHYLENE (HDPE)

Permits/Conditions:

1. THE PROPOSED "TOWN BROOK OPEN SPACE IMPROVEMENTS" SHALL BE CONSTRUCTED IN ACCORDANCE WITH THE FOLLOWING DOCUMENTS:
   - 1.1. FINAL ORDER OF CONDITIONS FROM THE MASSACHUSETTS DEPARTMENT OF ENVIRONMENTAL PROTECTION, DATED MAY 30, 2012 (MASSDEP FILE 59-1261).
   - 1.2. WATER QUALITY CERTIFICATION FROM THE MASSACHUSETTS DEPARTMENT OF ENVIRONMENTAL PROTECTION, DATED AUGUST 31, 2012 (MASSDEP FILE 59-1261).
   - 1.3. UNITED STATES ARMY CORPS OF ENGINEERS MASSACHUSETTS GENERAL PERMIT AND SPECIAL CONDITIONS NOTED FOR CATEGORY 2 PERMIT (USACE PERMIT #NAE-2010-1986).

DATUM RELATIONSHIP

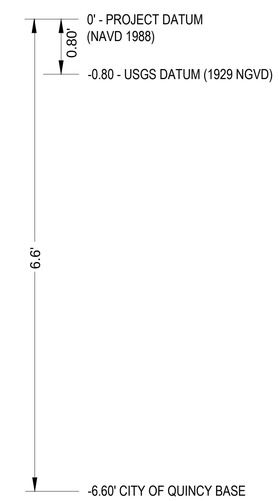

SCALE 1" = 1'

EBI Consulting
environmental | engineering | due diligence
21 B Street | Burlington, MA 01803
Tel: 781.273.2500 | Fax: 781.273.3311
www.ebiconsulting.com

COMMONWEALTH OF MASSACHUSETTS — KARLIS KRUTE — No. 47705 — REGISTERED PROFESSIONAL ENGINEER — 4/26/2013

ENGINEER STAMP/SIGNATURE

PREPARED FOR:
City of Quincy
1305 Hancock Street
Quincy, Massachusetts 02619
Tel: (617) 376-1362
Fax: (617) 376-1097
www.quincyma.gov

THIS DOCUMENT IS THE DESIGN PROPERTY AND COPYRIGHT OF EBI CONSULTING, INC. AND FOR THE EXCLUSIVE USE BY THE TITLE CLIENT. ANY DUPLICATION OR USE WITHOUT EXPRESS WRITTEN CONSENT OF THE CREATOR IS STRICTLY PROHIBITED.

DRAWING SCALES NOTED ARE FOR 24" x 36" SIZE PRINTED MEDIA ONLY. ALL OTHER PRINTED SIZES ARE DEEMED "NOT TO SCALE".

SUBMITTALS

NO.	DATE	DESCRIPTION	BY

DATE: April 26, 2013
PROJECT NUMBER: 16130005

PROJECT TITLE:
Town Brook Open Space Improvements
Revere Road
Quincy, Massachusetts 02169
Norfolk County

ISSUED FOR:
Bidding
(Not Approved for Construction)

SHEET TITLE:
Legend & General Notes

SCALE: N.T.S.
DESIGNED BY: JVC/MVG
CHECKED BY: KPS
SHEET NO: C-2

J:\Fay Spofford & Thorndike\Town Brook Enhancement Open Space\CAD\Planset\TB-OS-Planset.dwg

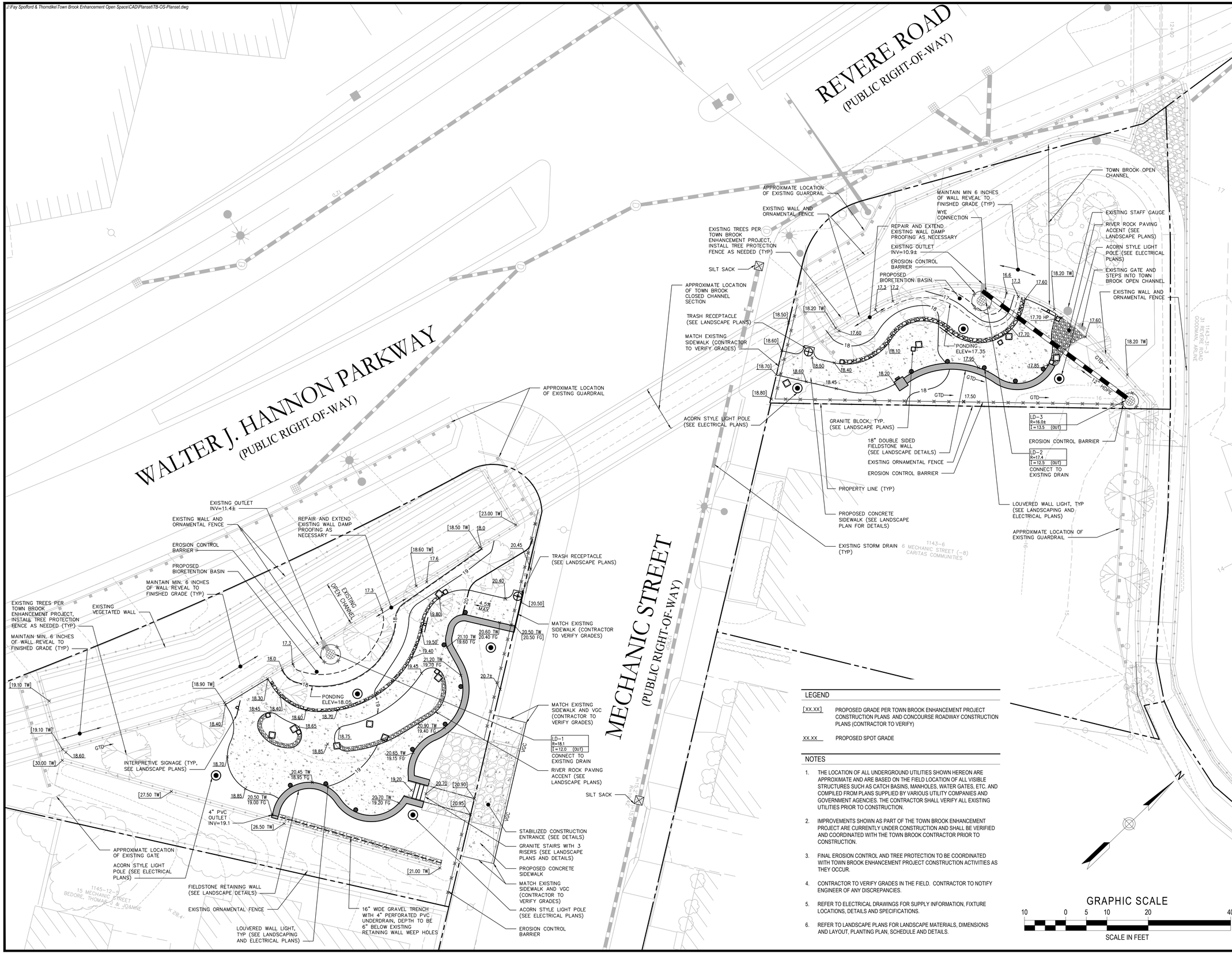

LEGEND

[XX.XX]	PROPOSED GRADE PER TOWN BROOK ENHANCEMENT PROJECT CONSTRUCTION PLANS AND CONCOURSE ROADWAY CONSTRUCTION PLANS (CONTRACTOR TO VERIFY)
XX.XX	PROPOSED SPOT GRADE

NOTES

1. THE LOCATION OF ALL UNDERGROUND UTILITIES SHOWN HEREON ARE APPROXIMATE AND ARE BASED ON THE FIELD LOCATION OF ALL VISIBLE STRUCTURES SUCH AS CATCH BASINS, MANHOLES, WATER GATES, ETC. AND COMPILED FROM PLANS SUPPLIED BY VARIOUS UTILITY COMPANIES AND GOVERNMENT AGENCIES. THE CONTRACTOR SHALL VERIFY ALL EXISTING UTILITIES PRIOR TO CONSTRUCTION.
2. IMPROVEMENTS SHOWN AS PART OF THE TOWN BROOK ENHANCEMENT PROJECT ARE CURRENTLY UNDER CONSTRUCTION AND SHALL BE VERIFIED AND COORDINATED WITH THE TOWN BROOK CONTRACTOR PRIOR TO CONSTRUCTION.
3. FINAL EROSION CONTROL AND TREE PROTECTION TO BE COORDINATED WITH TOWN BROOK ENHANCEMENT PROJECT CONSTRUCTION ACTIVITIES AS THEY OCCUR.
4. CONTRACTOR TO VERIFY GRADES IN THE FIELD. CONTRACTOR TO NOTIFY ENGINEER OF ANY DISCREPANCIES.
5. REFER TO ELECTRICAL DRAWINGS FOR SUPPLY INFORMATION, FIXTURE LOCATIONS, DETAILS AND SPECIFICATIONS.
6. REFER TO LANDSCAPE PLANS FOR LANDSCAPE MATERIALS, DIMENSIONS AND LAYOUT, PLANTING PLAN, SCHEDULE AND DETAILS.

EBI Consulting
environmental | engineering | due diligence
21 B Street | Burlington, MA 01803
Tel: 781.273.2500 | Fax: 781.273.3311
www.ebiconsulting.com

COMMONWEALTH OF MASSACHUSETTS KARLIS KRUTE No. 47703 REGISTERED PROFESSIONAL ENGINEER 4/26/2013

ENGINEER STAMP/SIGNATURE

PREPARED FOR:
City of Quincy
1305 Hancock Street
Quincy, Massachusetts 02619
Tel: (617) 376-1362
Fax: (617) 376-1097
www.quincyma.gov

THIS DOCUMENT IS THE DESIGN PROPERTY AND COPYRIGHT OF EBI CONSULTING, INC. AND FOR THE EXCLUSIVE USE BY THE TITLE CLIENT. ANY DUPLICATION OR USE WITHOUT EXPRESS WRITTEN CONSENT OF THE CREATOR IS STRICTLY PROHIBITED.

DRAWING SCALES NOTED ARE FOR 24" x 36" SIZE PRINTED MEDIA ONLY. ALL OTHER PRINTED SIZES ARE DEEMED "NOT TO SCALE".

SUBMITTALS

NO.	DATE	DESCRIPTION	BY

DATE: April 26, 2013
PROJECT NUMBER: 16130005

PROJECT TITLE:
Town Brook Open Space Improvements
Revere Road
Quincy, Massachusetts 02169
Norfolk County

ISSUED FOR:
Bidding
(Not Approved for Construction)

SHEET TITLE:
Site Plan

SCALE: 1" = 10'
DESIGNED BY: JVC/MVG
CHECKED BY: KPS
SHEET NO: C-3

J:\Fay Spofford & Thorndike\Town Brook Enhancement Open Space\CAD\Planset\TBRP_OS-DT.dwg

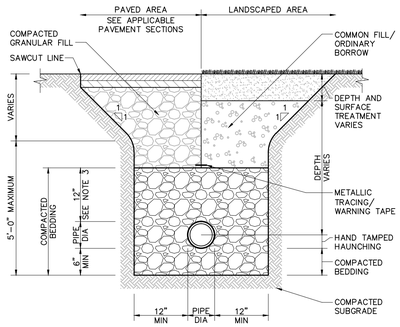

CONSTRUCTION NOTES

1. WHERE UTILITY TRENCHES ARE CONSTRUCTED THROUGH DETENTION BASIN BERMS OR OTHER SUCH SPECIAL SECTIONS, PLACE TRENCH BACKFILL WITH MATERIALS SIMILAR TO THE SPECIAL SECTION REQUIREMENTS.
2. USE METALLIC TRACING/WARNING TAPE OVER ALL PIPES.
3. FOR HIGH DENSITY POLYETHYLENE (HDPE) PIPE, DIMENSION IS 24 INCHES.

UTILITY TRENCH

SCALE: N.T.S.

C-3

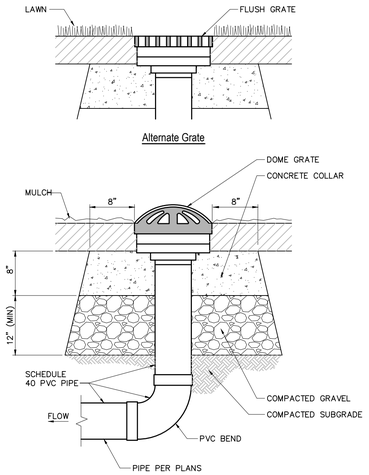

LANDSCAPE DRAIN

SCALE: N.T.S.

C-3

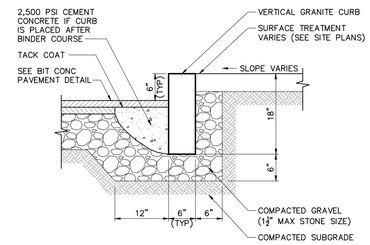

VERTICAL GRANITE CURB (VGC)

SCALE: N.T.S.

C-3

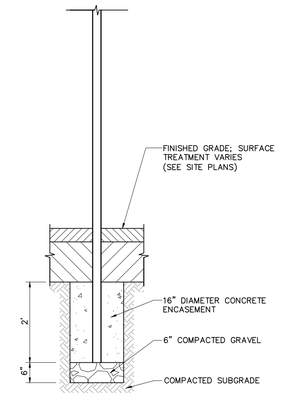

SIGN POST FOUNDATION

SCALE: N.T.S.

C-3

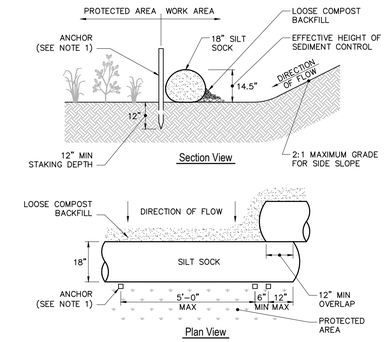

CONSTRUCTION NOTES

1. ANCHOR TO BE A 2" X 2" X 36" HARD WOOD STAKE, OR APPROVED EQUAL.
2. COMPOST FOR SILT SOCK FILL MATERIAL TO BE PROVIDED BY THE MANUFACTURER IN CONJUNCTION WITH THE ENGINEER TO PROVIDE THE REQUIRED REMOVAL OF SEDIMENT OR OTHER POLLUTANTS FROM RUNOFF.
3. COMPOST MATERIAL SHALL BE DISPERSED ON SITE, AS DETERMINED BY THE LOCAL CONSERVATION AGENT OR THE DESIGN ENGINEER.
4. SILT SOCK SHALL BE INSPECTED AT LEAST ONCE EVERY SEVEN DAYS OR PER LOCAL AND STATE REQUIREMENTS. REPAIR OR REPLACEMENT SHALL BE PERFORMED PROMPTLY, AS NEEDED.
5. METHOD OF INSTALLATION SHALL BE AS PER MANUFACTURER'S RECOMMENDATIONS.

EROSION CONTROL BARRIER (SILT SOCK)

SCALE: N.T.S.

C-3

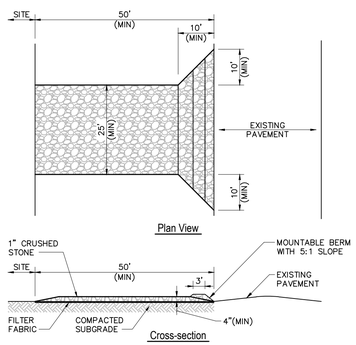

CONSTRUCTION NOTES

1. ENTRANCE WIDTH SHALL BE A TWENTY-FIVE (25) FOOT MINIMUM, BUT NOT LESS THAN THE FULL WIDTH AT POINTS WHERE INGRESS OR EGRESS OCCURS.
2. THE ENTRANCE SHALL BE MAINTAINED IN A CONDITION WHICH SHALL PREVENT TRACKING OR FLOWING OF SEDIMENT ONTO PUBLIC RIGHTS-OF-WAY. THIS MAY REQUIRE PERIODIC TOP DRESSING WITH ADDITIONAL STONE AS CONDITIONS DEMAND AND REPAIR OR CLEANOUT OF ANY MEASURES USED TO TRAP SEDIMENT. ALL SEDIMENT SPILLED, DROPPED, WASHED OR TRACKED ONTO PUBLIC RIGHTS-OF-WAY MUST BE REMOVED IMMEDIATELY. PERIODIC INSPECTION AND MAINTENANCE SHALL BE PROVIDED AS NEEDED.
3. STABILIZED CONSTRUCTION ENTRANCE SHALL BE REMOVED PRIOR TO FINAL FINISHED MATERIALS BEING INSTALLED.

STABILIZED CONSTRUCTION EXIT

SCALE: N.T.S.

C-3

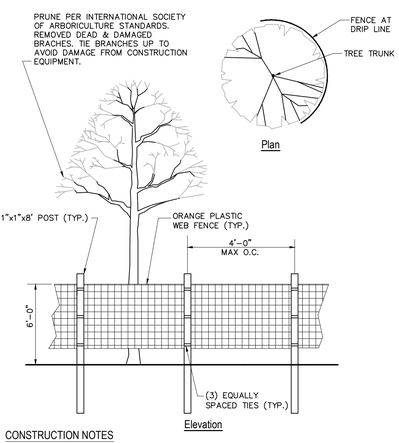

CONSTRUCTION NOTES

1. INSTALL TREE PROTECTION FENCE AT THE DRIIP LINE OF EXISTING TREES TO REMAIN
2. IF DRIP LINES OVERLAP, INSTALL CONTINUOUS PROTECTION FENCE FOR MULTIPLE EXISTING TREE TO REMAIN.

TREE PROTECTION FENCE

SCALE: N.T.S.

C-3

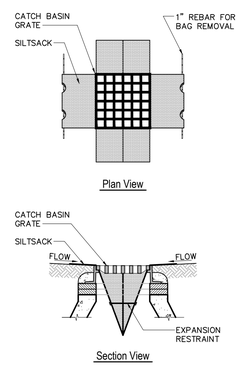

CONSTRUCTION NOTES

1. INSTALL SILT SACKS IN ALL CATCH BASINS WHERE INDICATED ON THE SITE PLANS BEFORE COMMENCING WORK OR IN PAVED AREAS AFTER BINDER COURSE IS PLACED AND HAY BALES HAVE BEEN REMOVED.
2. GRATE TO BE PLACED OVER SILT SACK.
3. SILT SACKS SHALL BE INSPECTED PERIODICALLY AND AFTER ALL STORM EVENTS. CLEANING OR REPLACEMENT SHALL BE PERFORMED AS NEEDED. MAINTAIN SILT SACKS UNTIL UPSTREAM AREAS HAVE BEEN PERMANENTLY STABILIZED.

SILT SACK

SCALE: N.T.S.

C-3

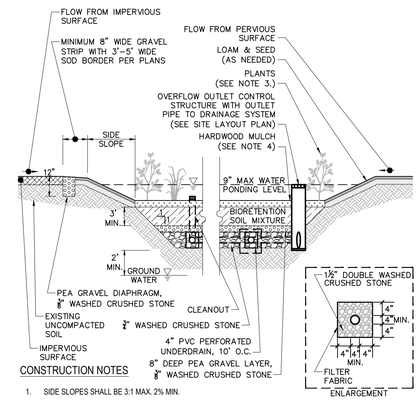

CONSTRUCTION NOTES

1. SIDE SLOPES SHALL BE 3:1 MAX. 2% MIN.
2. BIORETENTION SOIL MIXTURE TO BE "ENGINEERED SOIL MIX FOR BIORETENTION SYSTEMS" PER MASSDEP STORMWATER HANDBOOK VOLUME 2.
3. PLANTS SPECIES TO BE SUITABLE FOR USE IN BIORETENTION AND MUST COMPLY WITH THE MASSDEP STORMWATER HANDBOOK VOLUME 2.
4. MULCH TO BE TRIPLE SHREDDED HARD WOOD MULCH PLACED AT A DEPTH OF 3 INCHES. PINE MULCH IS NOT ACCEPTABLE.

BIORETENTION BASIN

SCALE: N.T.S.

C-3

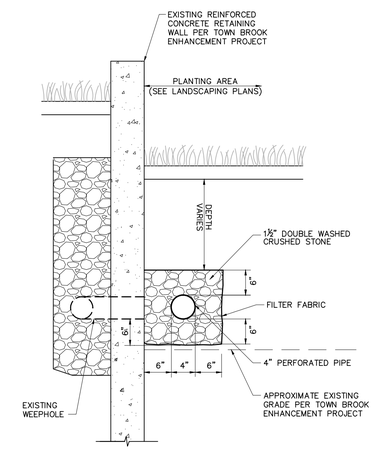

GRAVEL TRENCH DETAIL

SCALE: N.T.S.

C-3

EBI Consulting
environmental | engineering | due diligence
21 B Street | Burlington, MA 01803
Tel: 781.273.2500 | Fax: 781.273.3311
www.ebiconsulting.com

COMMONWEALTH OF MASSACHUSETTS KARLIS SKULTE No. 47705 REGISTERED PROFESSIONAL ENGINEER 4/26/2013

ENGINEER STAMP/SIGNATURE

PREPARED FOR:
City of Quincy

1305 Hancock Street
Quincy, Massachusetts 02619
Tel: (617) 376-1362
Fax: (617) 376-1097
www.quincyma.gov

THIS DOCUMENT IS THE DESIGN PROPERTY AND COPYRIGHT OF EBI CONSULTING, INC. AND FOR THE EXCLUSIVE USE BY THE TITLE CLIENT. ANY DUPLICATION OR USE WITHOUT EXPRESS WRITTEN CONSENT OF THE CREATOR IS STRICTLY PROHIBITED.

DRAWING SCALES NOTED ARE FOR 24" x 36" SIZE PRINTED MEDIA ONLY. ALL OTHER PRINTED SIZES ARE DEEMED "NOT TO SCALE".

SUBMITTALS

NO.	DATE	DESCRIPTION	BY

DATE: April 26, 2013

PROJECT NUMBER: 16130005

PROJECT TITLE:
Town Brook Open Space Improvements

Revere Road
Quincy, Massachusetts 02169
Norfolk County

ISSUED FOR:
Bidding
(Not Approved for Construction)

SHEET TITLE:
Detail Sheet

SCALE: N.T.S.

DESIGNED BY: MVG

CHECKED BY: KPS

SHEET NO: C-4

C:\Users\becca\Documents\My Dropbox\ubla_shared\1232-sdg-quincy_fst\dwgs\1232-landscape.dwg

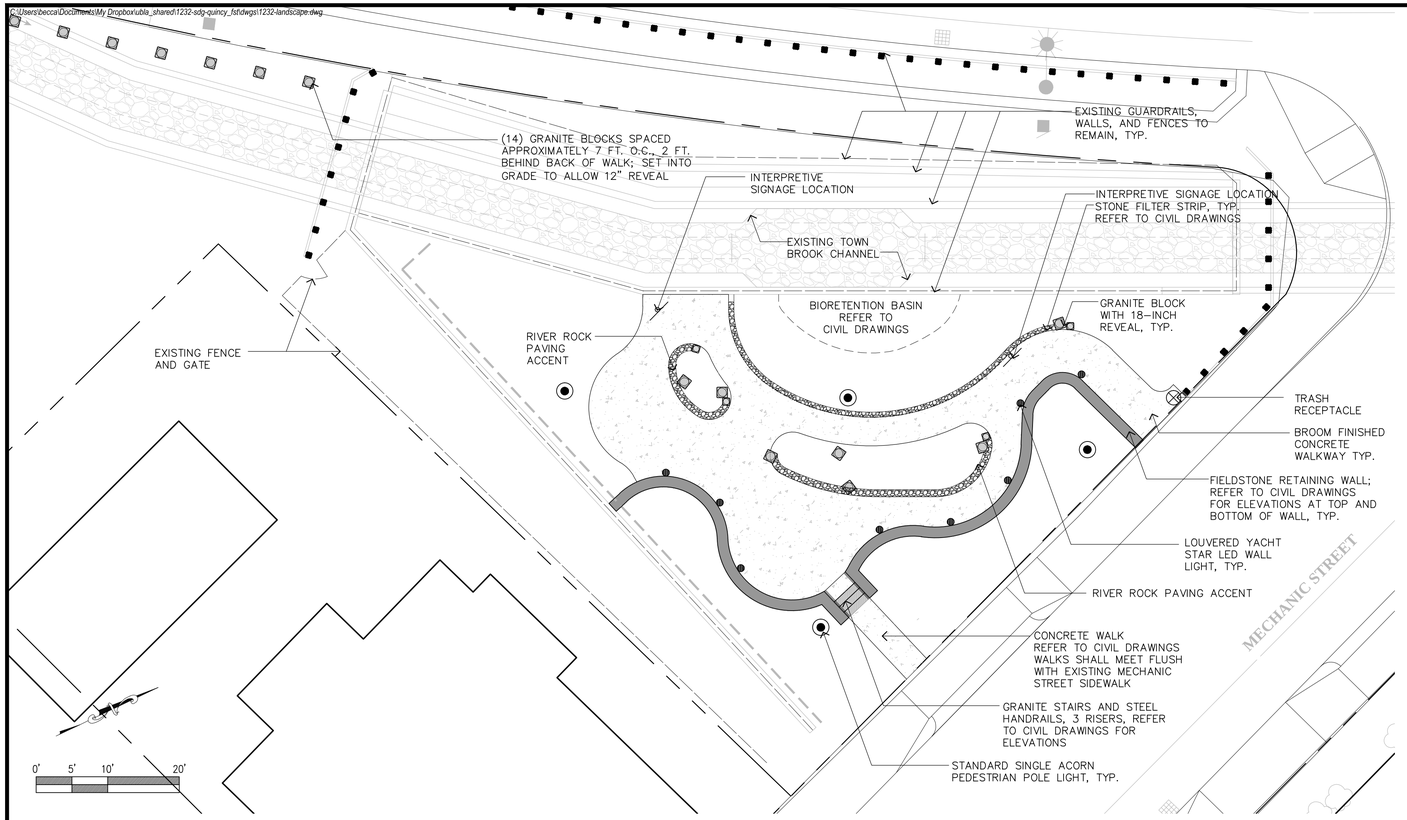

MATERIALS PLAN: UPPER PARCEL

1"=10'-0"

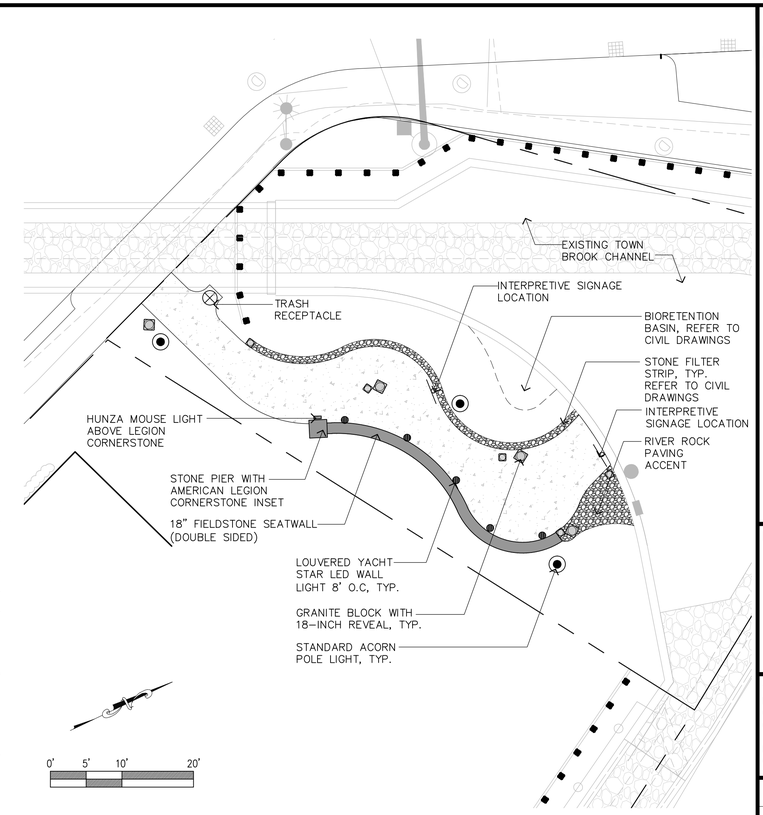

MATERIALS PLAN: LOWER "LEGION" PARCEL

1"=10'-0"

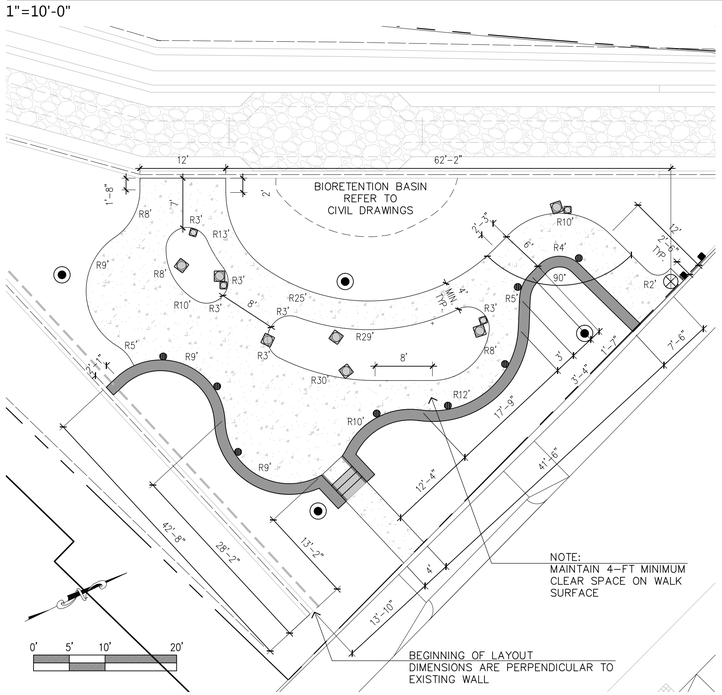

LAYOUT PLAN: UPPER PARCEL

1"=10'-0"

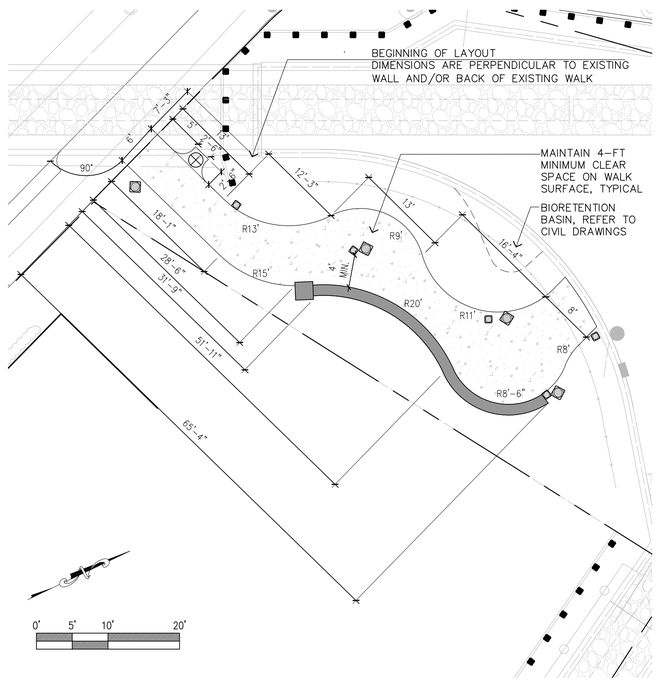

LAYOUT PLAN: LOWER "LEGION" PARCEL

1"=10'-0"

LAYOUT AND MATERIAL NOTES

1. ELEVATIONS REFERENCED IN THIS DRAWING REFLECT NAVD 1988 ELEVATIONS. ELEVATIONS REFERENCED FROM QUINCY CENTER CONCOURSE - SECTION 2 HAVE BEEN ADJUSTED FROM PREVIOUS DATUM (NGVD 1929) BY DATUM RELATIONSHIP ADJUSTMENTS SHOWN ON COVER PAGE.
2. EXISTING CONDITIONS ARE COMPILED FROM SURVEY AND TOWN BROOK RELOCATION DESIGN DRAWINGS PROVIDED BY EBI CONSULTING, INC. AND SHALL BE VERIFIED IN THE FIELD PRIOR TO CONSTRUCTION START.
3. THE CONTRACTOR SHALL NOTIFY DIGSAFE AND THE PROPER LOCAL AUTHORITIES OR RESPECTIVE UTILITY COMPANIES TO CONFIRM THE LOCATION OF ALL EXISTING UTILITIES BEFORE COMMENCING WORK. ANY DAMAGE DUE TO FAILURE OF THE CONTRACTOR TO CONTACT THE PROPER AUTHORITIES SHALL BE BORNE BY THE CONTRACTOR.
4. CONTRACTOR(s) SHALL THOROUGHLY FAMILIARIZE THEMSELVES WITH ALL CONSTRUCTION DOCUMENTS, SPECIFICATIONS, AND SITE CONDITIONS PRIOR TO BIDDING AND PRIOR TO CONSTRUCTION.
5. ANY DISCREPANCIES BETWEEN DRAWINGS, SPECIFICATIONS, AND SITE CONDITIONS SHALL BE REPORTED IMMEDIATELY TO THE OWNER'S REPRESENTATIVE FOR CLARIFICATION AND RESOLUTION PRIOR TO BIDDING OR CONSTRUCTION.
6. ALL WORK CONDUCTED WITHIN PUBLIC RIGHT-SOF-WAY SHALL CONFORM TO THE REQUIREMENTS AND SPECIFICATIONS OF THE CITY OF QUINCY AND THE MASSACHUSETS HIGHWAY DEPARTMENT.
7. REFER TO CIVIL ENGINEER'S DOCUMENTS FOR ALL GRADING AND UTILITIES INFORMATION.
8. REFER TO ELECTRICAL DRAWINGS FOR SUPPLY INFORMATION, EXACT FIXTURE LOCATIONS, DETAILS, AND SPECIFICATIONS.
9. REFER TO L-5 THROUGH L-7 FOR IRRIGATION INFORMATION.
10. ACCESSIBLE CURB RAMPS SHALL BE PER THE MASSACHUSETTS ARCHITECTURAL ACCESS BOARD (AAB) AND THE AMERICANS WITH DISABILITIES ACT (ADA) ACCESSIBILITY GUIDELINES, WHICHEVER IS MORE STRINGENT.
11. SCREENED IMAGES SHOW EXISTING CONDITIONS. WHERE EXISTING CONDITIONS LIE UNDER OR ARE IMPINGED UPON BY PROPOSED BUILDINGS AND/OR SITE ELEMENTS, THE EXISTING CONDITION WILL BE REMOVED, ABANDONED AND/OR CAPPED OR DEMOLISHED AS REQUIRED.

PROPOSED LEGEND

- FIELDSTONE RETAINING WALL
- GRANITE BLOCK
- ACORN STYLE PEDESTRIAN POLE LIGHT
- RIVER ROCK PAVING ACCENT
- CONCRETE PAVEMENT
- EXISTING WALL
- EXISTING FENCE
- EXISTING GUARDRAIL
- EXISTING TOWN BROOK CHANNEL
- HUNZA MOUSELITE
- LOUVERED YACHT STAR WALL LIGHT
- TRASH RECEPTACLE

EBI Consulting
environmental | engineering | due diligence
21 B Street | Burlington, MA 01803
Tel: 781.273.2500 | Fax: 781.273.3311
www.ebiconsulting.com

ubla
Ulrich Bachand Landscape Architecture, LLC
156 Cabot Street Unit 2A
Beverly, MA 01915
978-922-2661
www.ub-la.com

MASSACHUSETTS REBECCA A. BACHAND NO. 1388 REGISTERED LANDSCAPE ARCHITECT 4/26/2013

ENGINEER STAMP/SIGNATURE

PREPARED FOR:
City of Quincy
1305 Hancock Street
Quincy, Massachusetts 02619
Tel: (617) 376-1362
Fax: (617) 376-1097
www.quincyma.gov

THIS DOCUMENT IS THE DESIGN PROPERTY AND COPYRIGHT OF EBI CONSULTING, INC. AND FOR THE EXCLUSIVE USE BY THE TITLE CLIENT. ANY DUPLICATION OR USE WITHOUT EXPRESS WRITTEN CONSENT OF THE CREATOR IS STRICTLY PROHIBITED.

DRAWING SCALES NOTED ARE FOR 24" x 36" SIZE PRINTED MEDIA ONLY. ALL OTHER PRINTED SIZES ARE DEEMED "NOT TO SCALE".

SUBMITTALS

NO.	DATE	DESCRIPTION	BY

DATE: April 26, 2013

PROJECT NUMBER: ubla1232

PROJECT TITLE:
Town Brook Open Space Improvements
Revere Road
Quincy, Massachusetts 02169
Norfolk County

ISSUED FOR: Bidding

SHEET TITLE: Layout and Materials Plans

SCALE: AS SHOWN

DESIGNED BY: MGU

CHECKED BY: RAB

SHEET NO: L-1

C:\Users\becca\Documents\My Dropbox\ubla_shared\1232-sdg-quincy_fst\dwgs\1232-landscape.dwg

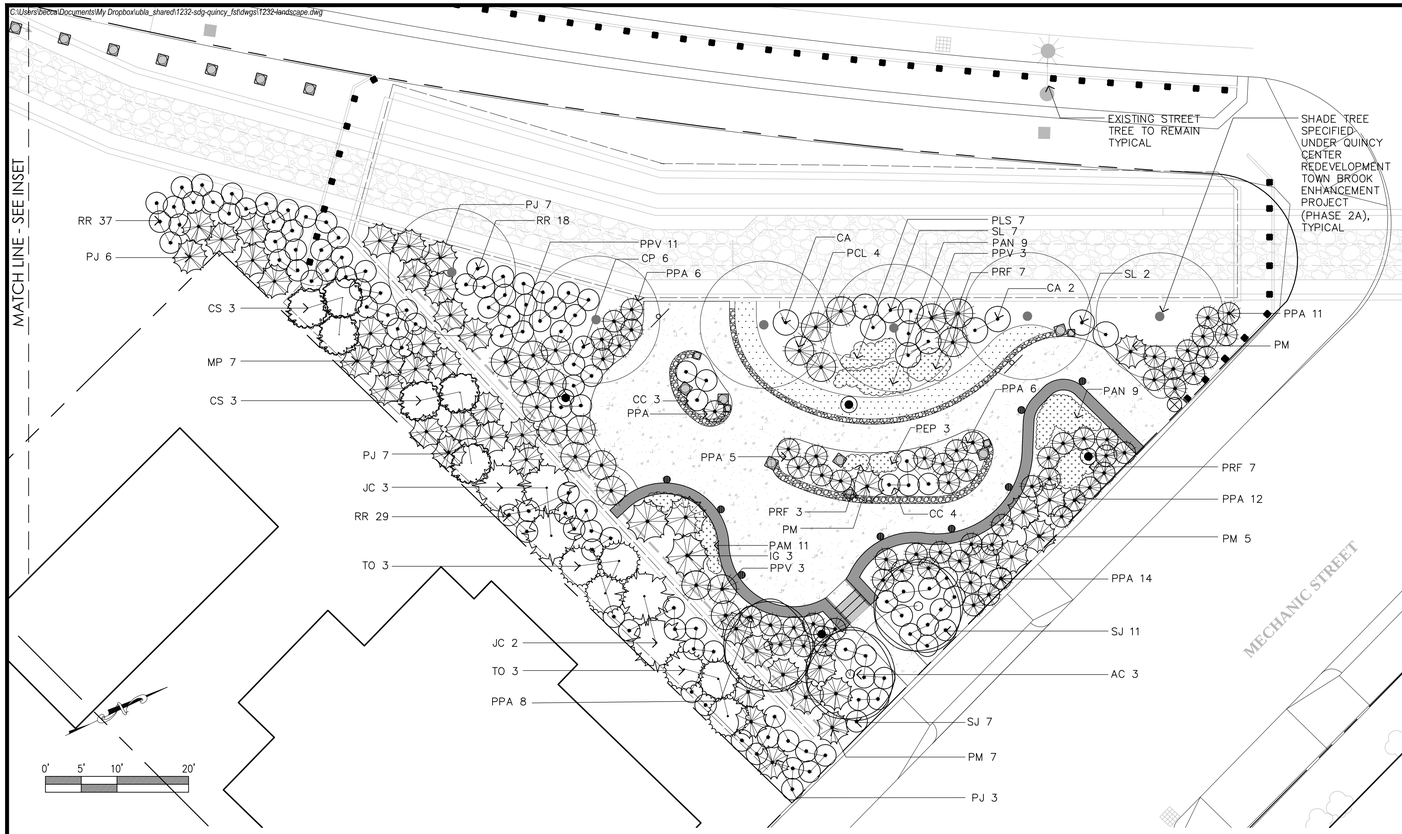

UPPER PARCEL

1"=10'-0"

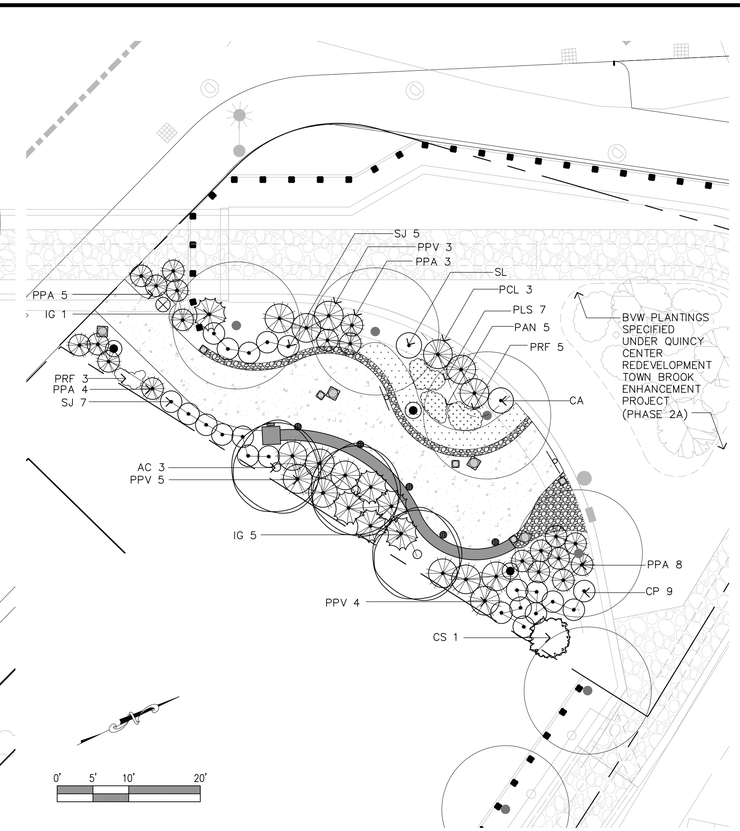

LOWER "LEGION" PARCEL

1"=10'-0"

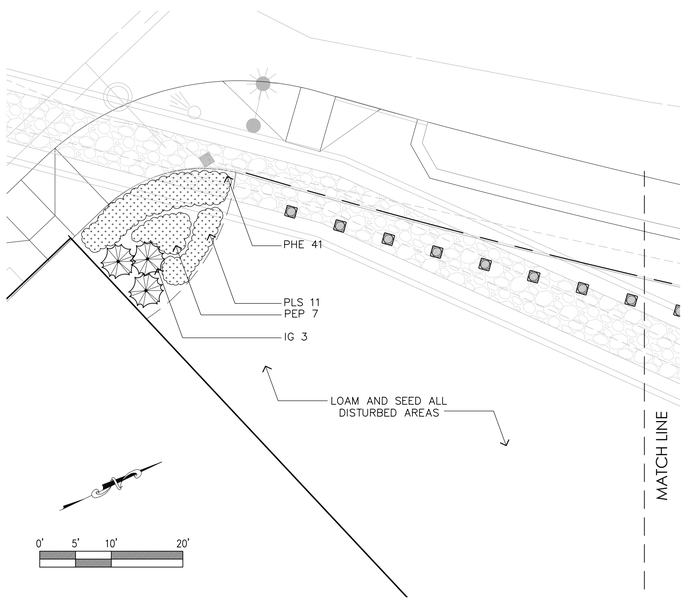

INSET - HANCOCK STREET AND HANNON PARKWAY

1"=10-0"'

PLANTING NOTES

1. ELEVATIONS REFERENCED IN THIS DRAWING REFLECT NAVD 1988 ELEVATIONS. ELEVATIONS REFERENCED FROM QUINCY CENTER CONCOURSE - SECTION 2 HAVE BEEN ADJUSTED FROM PREVIOUS DATUM (NGVD 1929) BY DATUM RELATIONSHIP ADJUSTMENTS SHOWN ON COVER PAGE.
2. EXISTING CONDITIONS ARE COMPILED FROM SURVEY AND TOWN BROOK RELOCATION DESIGN DRAWINGS PROVIDED BY EBI CONSULTING, INC. AND SHALL BE VERIFIED IN THE FIELD PRIOR TO CONSTRUCTION START.
3. CONTRACTOR TO PROVIDE SUPPORT FOR AND MAINTAIN EXISTING UTILITIES IN WORKING ORDER DURING CONSTRUCTION, UNLESS OTHERWISE NOTED. CONTRACTOR SHALL SUBMIT TO OWNER FOR REVIEW PRIOR TO PERFORMING WORK.
4. CONTRACTOR SHALL VERIFY ALL TREE REMOVALS AND/OR TRANSPLANTS WITH OWNER'S REPRESENTATIVE PRIOR TO CONSTRUCTION START.
5. CONTRACTOR SHALL MAINTAIN POSITIVE DRAINAGE AWAY FROM ALL STRUCTURES AND PLANTING BEDS.
6. THE LANDSCAPE CONTRACTOR SHALL SUPPLY ALL PLANT MATERIALS IN QUANTITIES SUFFICIENT TO COMPLETE ALL PLANTINGS SHOWN ON THIS DRAWING.
7. ALL MATERIALS SHALL CONFORM TO THE GUIDELINES ESTABLISHED BY THE AMERICAN NURSERY AND LANDSCAPE ASSOCIATION.
8. ALL PLANTS SHALL BEAR THE SAME RELATIONSHIP TO FINISH GRADE AS TO ORIGINAL GRADES BEFORE DIGGING.
9. ALL PLANTS TO BE BALLED IN BURLAP OR CONTAINERIZED.
10. MULCH FOR PLANTED AREAS TO BE AGED PINE BARK: PARTIALLY DECOMPOSED, DARK BROWN IN COLOR AND FREE OF WOOD CHIPS THICKER THAN 1/4 INCH.
11. PLANTING SOIL MIX: LOAM THOROUGHLY INCORPORATED WITH ROTTED MANURE PROPORTIONED 5 C.Y. TO 1 C.Y. OR EQUIVALENT. FERTILIZER ADDED PER RECOMMENDED RATES OF SOILS ANALYSIS.
12. CONTRACTOR SHALL BEGIN MAINTENANCE IMMEDIATELY AFTER PLANTING AND WILL CONTINUE UNTIL FINAL WRITTEN ACCEPTANCE OF PLANT MATERIAL
13. THE LANDSCAPE CONTRACTOR SHALL GUARANTEE ALL PLANT MATERIALS FOR ONE (1) FULL YEAR FROM DATE OF ACCEPTANCE.
14. ALL PLANT MATERIALS ARE SUBJECT TO THE APPROVAL OF THE LANDSCAPE ARCHITECT, AT THE NURSERY, AND AT THE SITE.
15. ALL AREAS OF THE SITE WHICH HAVE BEEN DISTURBED AND NOT OTHERWISE DEVELOPED SHALL BE LOAMED AND SEEDED WITH A MINIMUM DEPTH OF 6" DEPTH TOPSOIL.
16. PLANT SPECIES AS INDICATED IN THE PLANT LIST ARE SUGGESTIONS ONLY. FINAL SELECTION OF SPECIES SHALL OCCUR AT THE TIME OF PLANT PURCHASE, DEPENDING ON AVAILABILITY. PLANT SIZE AND QUANTITY SHALL NOT CHANGE WITHOUT APPROVAL OF OWNER'S REPRESENTATIVE.

PLANT SCHEDULE

SYMBOL	BOTANICAL NAME	COMMON NAME	QTY	SIZE	COMMENT
EVERGREEN TREES					
JC	JUNIPERUS CHINENSIS	MOUNTBATTEN JUNIPER	5	5-6' HT.	
TO	THUJA OCCIDENTALLIS	DARK AMERICAN ARBORVITAE	6	7-8' HT.	
ORNAMENTAL TREES					
AC	ACER CAMPESTRE	HEDGE MAPLE	6	2-2.5" CAL.	
SHRUBS					
CA	CLETHRA ALNIFOLIA 'COMPACTA'	16 CANDLES SUMMERSWEET	4	3 GALLON	
CC	CARYOPTERIS CLANDONENSIS	BLUE MIST SPIREA	7	3 GALLON	
CP	COMPTONIA PEREGRINA	SWEET FERN	15	1 GALLON	
CS	CORNUS SERICEA	RED TWIG DOGWOOD	7	2-3' HT.	
IG	ILEX GLABRA 'SHAMROCK'	SHAMROCK INKBERRY	12	18-24"	
MP	MYRICA PENSYLVANICA	BAYBERRY	7	5 GALLON	
PJ	JUNIPERUS CHINENSIS	PFITZER JUNIPER	23	3 GALLON	
PM	PINUS MUGO VAR. PUMILIO	PUMILIO MUGO PINE	14	10 GALLON	
RR	JUNIPERUS CHINENSIS 'PFITZERIANA COMPACTA'	COMPACT PFITZER JUNIPER	84	1 GALLON	
SJ	SPIREA JAPONICA	DAPHNE SPIREA	30	3 GALLON	
SL	SPIREA MILLEFOLIUM	MEADOWSWEET	10	3 GALLON	
GRASSES					
PCL	CHASMANTHIUM LATIFOLIUM	SEA OATS	7	1 GALLON	
PPV	PANICUM VIRGATUM 'HEAVY METAL'	SWITCH GRASS	29	2 GALLON	
PPA	PENNISETUM ALOPECUROIDES	FOUNTAIN GRASS	97	1 GALLON	
GROUNDCOVERS AND PERENNIALS					
PAM	ALCHEMILLA MOLLIS	LADY'S MANTLE	11	1 GALLON	
PAN	ASTER NOVAE ANGLIAE	NEW ENGLAND ASTER	23	1 GALLON	
PEP	ECHINACEA PURPUREA	PURPLE CONEFLOWER	10	1 GALLON	
PHE	HEMEROCALLIS	STELLA D'ORO DAYLILY	41	1 QUART	
PLS	LEUCANTHEMUM SUPERBUM	BECKY SHASTA DAISY	11	1 GALLON	
PRF	RUDBECKIA FULGIDA	BLACK EYED SUSAN	23	1 GALLON	
PLS	LIATRIS SPICATA	DENSE BLAZING STAR	25	1 GALLON	

EBI Consulting
environmental | engineering | due diligence
21 B Street | Burlington, MA 01803
Tel: 781.273.2500 | Fax: 781.273.3311
www.ebiconsulting.com

ubla
Ulrich Bachand Landscape Architecture, LLC
156 Cabot Street Unit 2A
Beverly, MA 01915
978-922-2661
www.ub-la.com

MASSACHUSETTS REBECCA A. BACHAND REGISTERED LANDSCAPE ARCHITECT NO. 1388
4/26/2013

ENGINEER STAMP/SIGNATURE

PREPARED FOR:
City of Quincy

1305 Hancock Street
Quincy, Massachusetts 02619
Tel: (617) 376-1362
Fax: (617) 376-1097
www.quincyma.gov

THIS DOCUMENT IS THE DESIGN PROPERTY AND COPYRIGHT OF EBI CONSULTING, INC. AND FOR THE EXCLUSIVE USE BY THE TITLE CLIENT. ANY DUPLICATION OR USE WITHOUT EXPRESS WRITTEN CONSENT OF THE CREATOR IS STRICTLY PROHIBITED.

DRAWING SCALES NOTED ARE FOR 24" x 36" SIZE PRINTED MEDIA ONLY. ALL OTHER PRINTED SIZES ARE DEEMED "NOT TO SCALE".

SUBMITTALS

NO.	DATE	DESCRIPTION	BY

DATE: April 26, 2013
PROJECT NUMBER: ubla1232

PROJECT TITLE:
Town Brook Open Space Improvements
Revere Road
Quincy, Massachusetts 02169
Norfolk County

ISSUED FOR: Bidding

SHEET TITLE: Landscape Plan

SCALE: AS SHOWN
DESIGNED BY: MGU
CHECKED BY: RAB
SHEET NO: L-2

C:\Users\becca\Documents\My Dropbox\ubla_shared\1232-sdg-quincy_fst\dwgs\1232-details.dwg

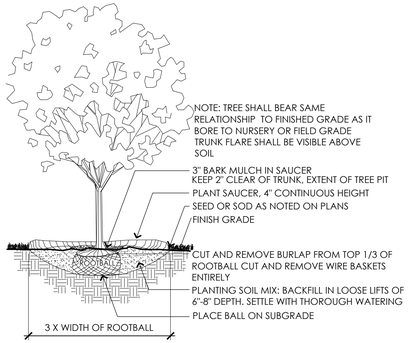

1 TYPICAL DECIDUOUS TREE PLANTING

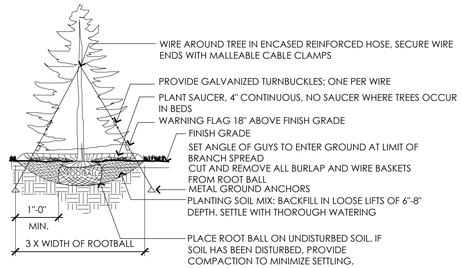

NOTE:

1. TREE SHALL BEAR SAME RELATIONSHIP TO FINISHED GRADE AS IT BORE TO NURSERY OR FIELD GRADE

2. INSTALL THREE GUYS PER TREE: EQUALLY SPACED AROUND BALL. ATTACH GUYS AT 2/3 HEIGHT OF TREE: USE DOUBLE STRAND GALVANIZED STEEL WIRE

2 TYPICAL EVERGREEN TREE PLANTING

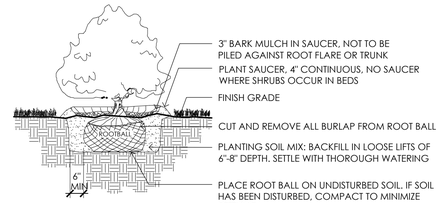

NOTES:

1. SHRUB SHALL BEAR SAME RELATIONSHIP TO FINISHED GRADE AS IT BORE TO NURSERY OR FIELD GRADE.

2. WHERE SHRUBS OCCUR IN GROUPINGS IN PLANT BEDS, PROVIDE 2 - FOOT DEEP CONTINUOUS LOAM BED.

3 TYPICAL SHRUB PLANTING

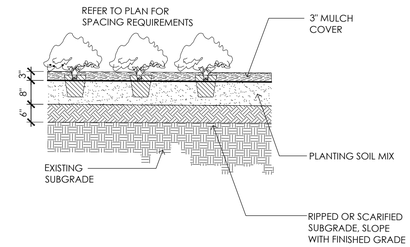

4 TYPICAL GROUNDCOVER PLANTING

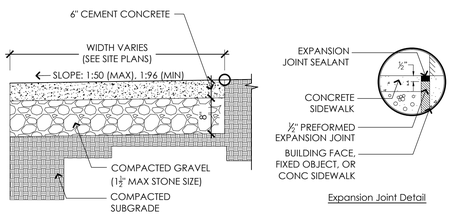

NOTES:

1. CEMENT CONCRETE SHALL BE 4,000 PSI-TYPE II.
2. PROVIDE EXPANSION JOINTS AT A MINIMUM 30 FEET ON-CENTER WITH PRE-FORMED EXPANSION JOINT FILLER AND SEALER.
3. PROVIDE TOOLED CONTROL JOINTS AT A MINIMUM SIX (6) FEET ON-CENTER.
4. PROVIDE BROOM FINISH IN DIRECTION PERPENDICULAR TO CURB.

5 6" CEMENT CONCRETE WALK

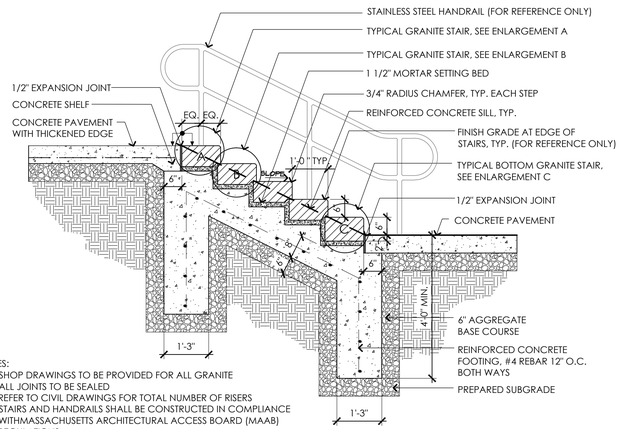

NOTES:

1. SHOP DRAWINGS TO BE PROVIDED FOR ALL GRANITE
2. ALL JOINTS TO BE SEALED
3. REFER TO CIVIL DRAWINGS FOR TOTAL NUMBER OF RISERS
4. STAIRS AND HANDRAILS SHALL BE CONSTRUCTED IN COMPLIANCE WITHMASSACHUSETTS ARCHITECTURAL ACCESS BOARD (MAAB) REGULATIONS

6 GRANITE STAIR

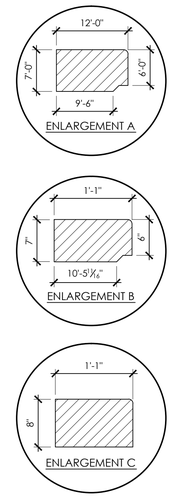

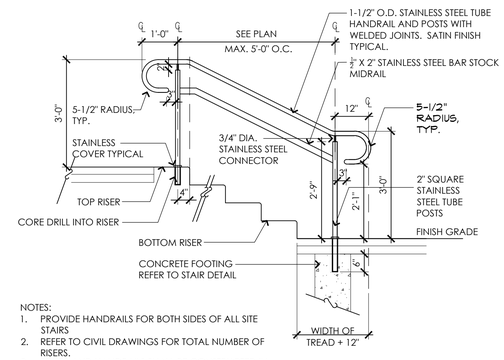

NOTES:

1. PROVIDE HANDRAILS FOR BOTH SIDES OF ALL SITE STAIRS
2. REFER TO CIVIL DRAWINGS FOR TOTAL NUMBER OF RISERS.
3. STAIRS AND HANDRAILS SHALL BE CONSTRUCTED IN COMPLIANCE WITH MASSACHUSETTS ARCHITECTURAL ACCESS BOARD (MAAB) REGULATIONS

7 STAINLESS STEEL HANDRAIL

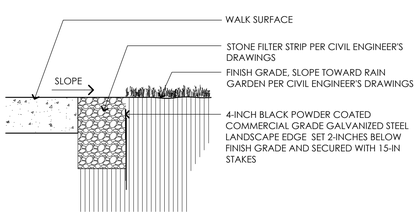

8 LANDSCAPE EDGE RESTRAINT

EBI Consulting
environmental | engineering | due diligence
21 B Street | Burlington, MA 01803
Tel: 781.273.2500 | Fax: 781.273.3311
www.ebiconsulting.com

ubla
Ulrich Bachand Landscape Architecture, LLC
156 Cabot Street Unit 2A
Beverly, MA 01915
978-922-2661
www.ub-la.com

MASSACHUSETTS REBECCA A. BACHAND NO. 1388 REGISTERED LANDSCAPE ARCHITECT 4/26/2013

ENGINEER STAMP/SIGNATURE

PREPARED FOR:
City of Quincy

1305 Hancock Street
Quincy, Massachusetts 02619
Tel: (617) 376-1362
Fax: (617) 376-1097
www.quincyma.gov

THIS DOCUMENT IS THE DESIGN PROPERTY AND COPYRIGHT OF EBI CONSULTING, INC. AND FOR THE EXCLUSIVE USE BY THE TITLE CLIENT. ANY DUPLICATION OR USE WITHOUT EXPRESS WRITTEN CONSENT OF THE CREATOR IS STRICTLY PROHIBITED.

DRAWING SCALES NOTED ARE FOR 24" x 36" SIZE PRINTED MEDIA ONLY. ALL OTHER PRINTED SIZES ARE DEEMED "NOT TO SCALE".

SUBMITTALS

NO.	DATE	DESCRIPTION	BY

DATE: April 26, 2013
PROJECT NUMBER: ubla1232

PROJECT TITLE:
Town Brook
Open Space
Improvements

Revere Road
Quincy, Massachusetts 02169
Norfolk County

ISSUED FOR:
Bidding

SHEET TITLE:
Landscape Details
Sheet 1

SCALE: NOT TO SCALE
DESIGNED BY: MGU
CHECKED BY: RAB
SHEET NO: L-3

C:\Users\becca\Documents\My Dropbox\ubla_shared\1232-sdg-quincy_fst\dwgs\1232-details.dwg

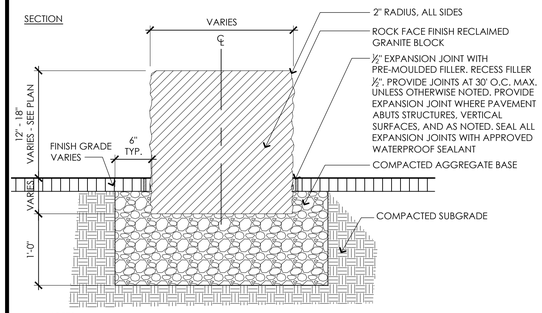

NOTES:
1. RECLAIMED GRANITE TO BE HAND SELECTED FROM STOCKPILE AVAILABLE FROM CITY OF QUINCY.
2. GRANITE BLOCKS SHALL BE SELECTED FOR CLOSE UNIFORMITY IN SIZE AND COLOR.
3. PROVIDE ½" EXPANSION JOINT WITH PRE-MOULDED FILLER WHERE BLOCK ABUTS VERTICAL SURFACE OR PAVEMENT.
4. SET GRANITE BLOCKS TO MAINTAIN 4' CLEARANCE ON WALK SURFACES.

1 GRANITE BLOCK

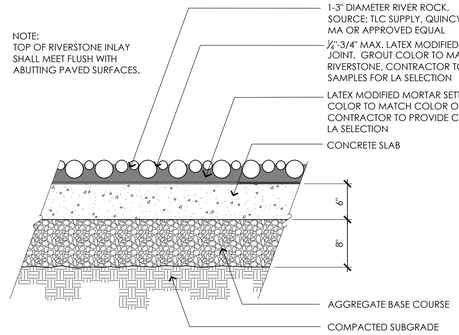

2 RIVER ROCK PAVING ACCENT

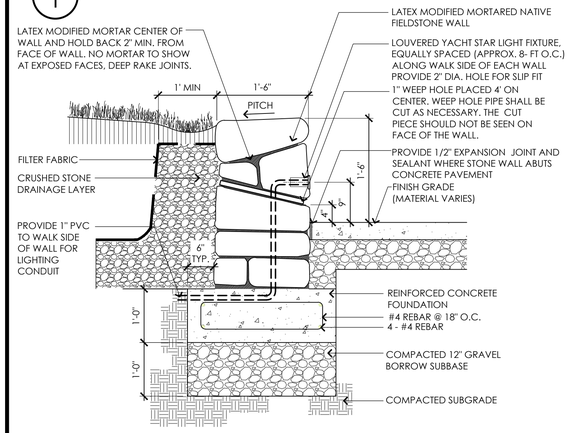

NOTES:
1. REFER TO GRADING PLAN FOR ELEVATIONS AT TOP AND BOTTOM OF EACH SIDE OF WALL
2. COORDINATE EXACT CONDUIT LOCATIONS, DRIVER LOCATIONS, AND ELECTRICAL CONNECTIONS WITH PROJECT ELECTRICAL ENGINEER PRIOR TO CONSTRUCTION START.
3. REFER TO ELECTRICAL DRAWINGS FOR LIGHTING AND CONDUIT DETAILS AND SPECIFICATIONS.

3 FIELDSTONE RETAINING WALL

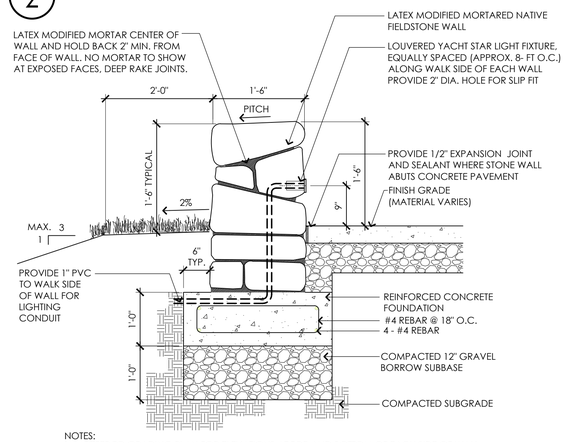

NOTES:
1. REFER TO GRADING PLAN FOR ELEVATIONS AT TOP AND BOTTOM OF EACH SIDE OF WALL
2. COORDINATE EXACT CONDUIT LOCATIONS, DRIVER LOCATIONS, AND ELECTRICAL CONNECTIONS WITH PROJECT ELECTRICAL ENGINEER PRIOR TO CONSTRUCTION START.
3. REFER TO ELECTRICAL DRAWINGS FOR LIGHTING AND CONDUIT DETAILS AND SPECIFICATIONS.

4 FIELDSTONE WALL (DOUBLE SIDED)

ELEVATION

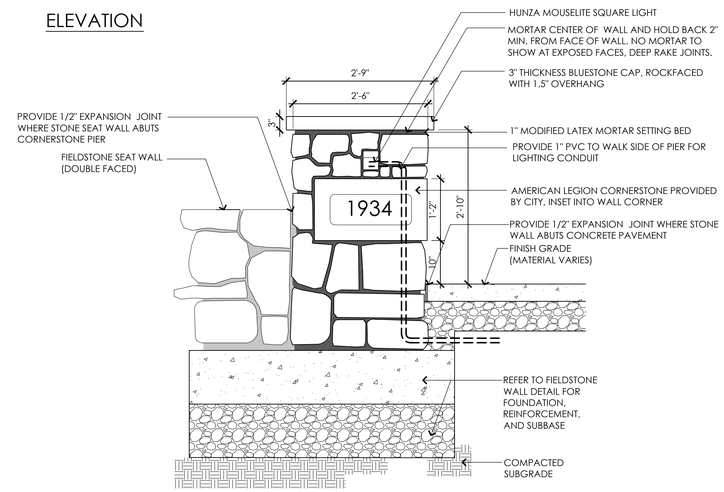

PLAN

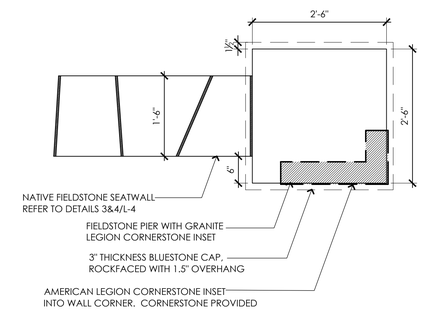

NOTES:
1. REFER TO GRADING PLAN FOR ELEVATIONS AT TOP AND BOTTOM OF EACH SIDE OF WALL
2. COORDINATE EXACT CONDUIT LOCATIONS, DRIVER LOCATIONS, AND ELECTRICAL CONNECTIONS WITH PROJECT ELECTRICAL ENGINEER PRIOR TO CONSTRUCTION START.
3. REFER TO ELECTRICAL DRAWINGS FOR LIGHTING AND CONDUIT DETAILS AND SPECIFICATIONS.

5 AMERICAN LEGION CORNERSTONE PIER

EBI Consulting
environmental | engineering | due diligence
21 B Street | Burlington, MA 01803
Tel: 781.273.2500 | Fax: 781.273.3311
www.ebiconsulting.com

ubla
Ulrich Bachand Landscape Architecture, LLC
156 Cabot Street Unit 2A
Beverly, MA 01915
978-922-2661
www.ub-la.com

MASSACHUSETTS REBECCA A. BACHAND NO. 1388 REGISTERED LANDSCAPE ARCHITECT
4/26/2013

ENGINEER STAMP/SIGNATURE

PREPARED FOR:
City of Quincy

1305 Hancock Street
Quincy, Massachusetts 02619
Tel: (617) 376-1362
Fax: (617) 376-1097
www.quincyma.gov

THIS DOCUMENT IS THE DESIGN PROPERTY AND COPYRIGHT OF EBI CONSULTING, INC. AND FOR THE EXCLUSIVE USE BY THE TITLE CLIENT. ANY DUPLICATION OR USE WITHOUT EXPRESS WRITTEN CONSENT OF THE CREATOR IS STRICTLY PROHIBITED.

DRAWING SCALES NOTED ARE FOR 24" x 36" SIZE PRINTED MEDIA ONLY. ALL OTHER PRINTED SIZES ARE DEEMED "NOT TO SCALE".

SUBMITTALS

NO.	DATE	DESCRIPTION	BY

DATE: April 26, 2013
PROJECT NUMBER: ubla1232

PROJECT TITLE:
Town Brook
Open Space
Improvements

Revere Road
Quincy, Massachusetts 02169
Norfolk County

ISSUED FOR:
Bidding

SHEET TITLE:
Landscape Details
Sheet 2

SCALE: NOT TO SCALE
DESIGNED BY: MGU
CHECKED BY: RAB
SHEET NO: L-4

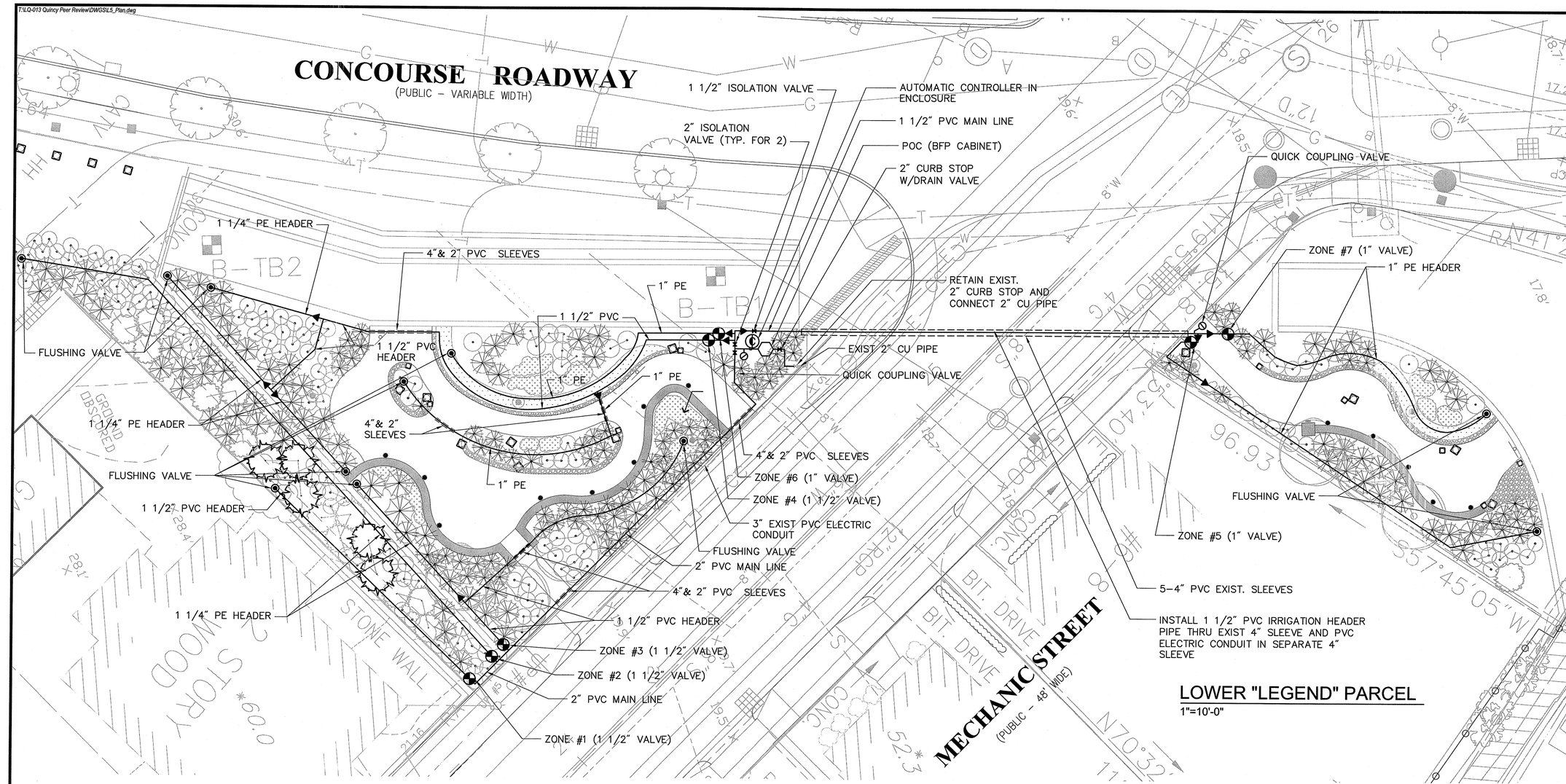

IRRIGATION SCHEDULES AND WATER DEMANDS

ZONE NO.	VALVE SIZE (INCH)	PLANT SYMBOLS FOLLOWED BY NUMBER OF PLANTS				WATER DEMAND (GPM)
		TREES	SHRUBS	GRASSES	GROUND COVER/ PERENNIALS	
1	1–1/2	JC 5, TO 6				1.10
2	1–1/2		RR 66, PJ 16, CS 6, MP 7			5.20
3	1–1/2	AC 3	PM 12, SJ 18, IG 3	PPA 44, PPV 3	PAM 11, PAN 9, PRF 7	3.97
4	1–1/2		RR 18, PJ 7, CP 6, CC 7, PM 2, SL 2	PP 11, PPA 29, PPV 11	PRS 3, PEP 3	3.90
5	1–1/2	AC 3	CS 1, IG 5, CP 9, SJ 7	PPA 12, PPV 9	PRF 3	2.15
6	1		CA 3, SL 7	PPV 3, PCL 4, PAN 9	PLS 7, PRF 7	1.27
7	1		CA 1, SL 1, SJ 5, IG 1	PPA 8, PPV 3, PCL 3, PAN 5	PLS 7, PRF 5	1.03
TOTAL		17	210	154	77	18.62

1. FLOW RATE IS BASED ON 1.0 GPH PER EMITTER OUTLET.
2. FOR PLANT SYMBOLS, REFER TO LANDSCAPE PLAN NO. L–2.

IRRIGATION LEGEND:

- ===== IRRIGATION SLEEVES
- POINT OF CONNECTION (POC) TO 310 CMR SECTION 22.22 IN ABOVE GROUND ENCLOSURE, SEE DWG L–6
- AUTOMATIC CONTROLLER IN CABINET
- ISOLATION VALVES – MAIN LINE
- ELECTRIC VALVE
- QUICK COUPLING VALVE
- IRRIGATION PIPE OR TUBING
- PIPE REDUCER
- FLUSHING VALVE

HEADER PIPE SIZE

0 – 12 GPM = 1" PE TUBING
12 – 22 GPM = 1 1/4" PE TUBING
22 – 35 GPM = 1 1/2" PVC PIPE
35 – 55 GPM = 2" PVC PIPE

NOTES:

1. FOR PLANTING, SEE LANDSCAPE PLAN L–2.
2. FOR ELECTRICAL SERVICE, SEE ELECTRICAL LAYOUT PLAN E–1.

EBI Consulting
environmental | engineering | due diligence
21 B Street | Burlington, MA 01803
Tel: 781.273.2500 | Fax: 781.273.3311
www.ebiconsulting.com

ubla
Ulrich Bachand Landscape Architecture, LLC
156 Cabot Street Unit 2A
Beverly, MA 01915
978-922-2661
www.ub-la.com

ENGINEERS
FST
Since 1914
FAY, SPOFFORD & THORNDIKE
ENGINEERS · PLANNERS · SCIENTISTS
5 BURLINGTON WOODS, BURLINGTON, MA 01803
COMMONWEALTH OF MASSACHUSETTS
GEORGE PROTASOWICKI
CIVIL
No. 41094
REGISTERED PROFESSIONAL ENGINEER
ENGINEER STAMP/SIGNATURE
04/26/13

PREPARED FOR:
City of Quincy
1305 Hancock Street
Quincy, Massachusetts 02619
Tel: (617) 376-1362
Fax: (617) 376-1097
www.quincyma.gov

THIS DOCUMENT IS THE DESIGN PROPERTY AND COPYRIGHT OF EBI CONSULTING, INC. AND FOR THE EXCLUSIVE USE BY THE TITLE CLIENT. ANY DUPLICATION OR USE WITHOUT EXPRESS WRITTEN CONSENT OF THE CREATOR IS STRICTLY PROHIBITED.

DRAWING SCALES NOTED ARE FOR 24" x 36" SIZE PRINTED MEDIA ONLY. ALL OTHER PRINTED SIZES ARE DEEMED "NOT TO SCALE".

SUBMITTALS

NO.	DATE	DESCRIPTION	BY

DATE: April 26, 2013
PROJECT NUMBER: FST # LQ-013

PROJECT TITLE:
Town Brook
Open Space Improvements

Revere Road
Quincy, Massachusetts 02169
Norfolk County

ISSUED FOR:
Local Permitting
(Not Approved for Construction)

SHEET TITLE:
IRRIGATION PLAN

SCALE: AS SHOWN
SHEET NO: L-5
DESIGNED BY: GP JCP
CHECKED BY: GP

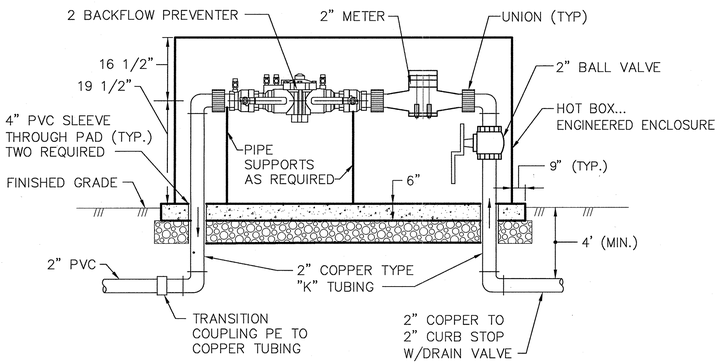

1 POC–BACKFLOW PREVENTER/METER DETAIL
NOT TO SCALE

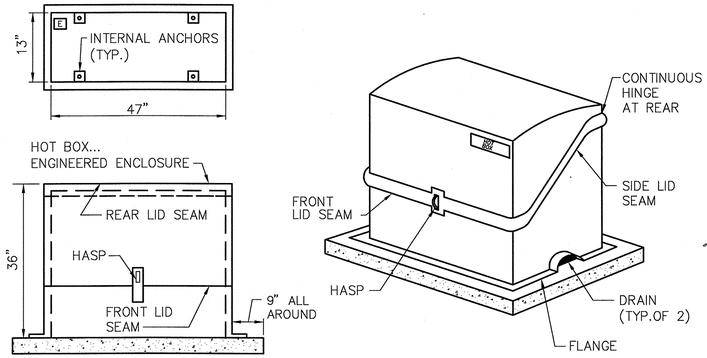

2 BFP ENCLOSURE DETAIL
NOT TO SCALE

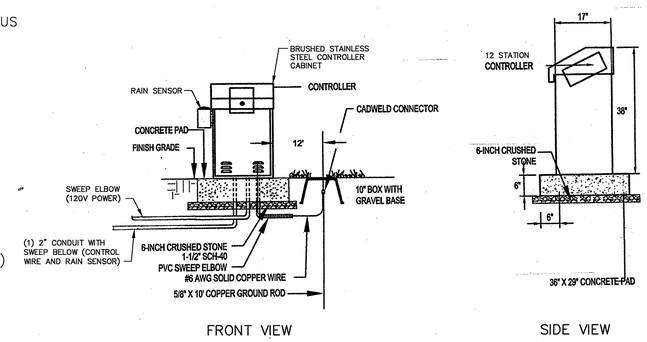

3 OUTDOOR CONTROLLER ENCLOSURE DETAIL
NOT TO SCALE

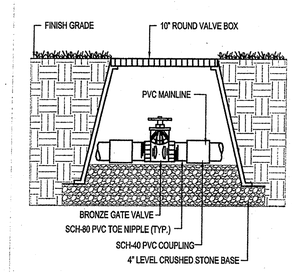

4 ISOLATION GATE VALVE DETAIL
NOT TO SCALE

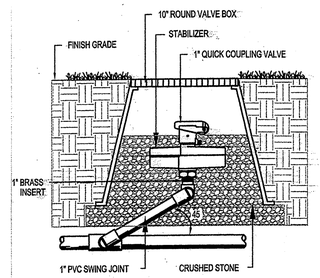

5 QUICK COUPLING VALVE DETAIL
NOT TO SCALE

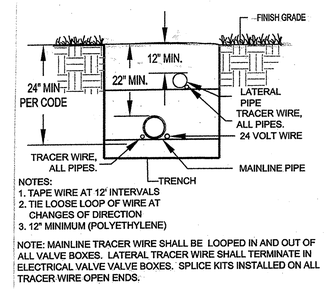

6 TRENCH AND WIRE DETAIL
NOT TO SCALE

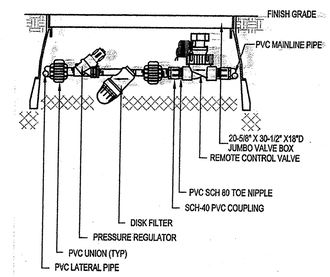

7 TRENCH AND WIRE DETAIL
NOT TO SCALE

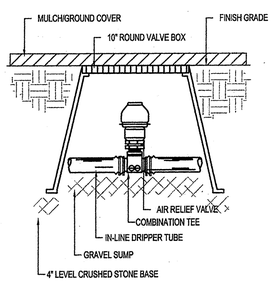

8 AIR RELIEF VALVE DETAIL
NOT TO SCALE

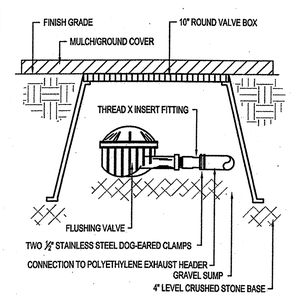

9 AUTOMATRIC FLUSHING VALVE DETAIL
NOT TO SCALE

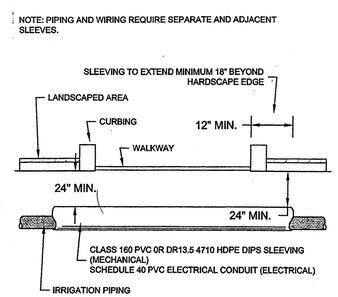

10 DRIP ZONE SUPPLY EXHAUST HEADER DETAIL
NOT TO SCALE

EBI Consulting
environmental | engineering | due diligence
21 B Street | Burlington, MA 01803
Tel: 781.273.2500 | Fax: 781.273.3311
www.ebiconsulting.com

ENGINEERS FST Since 1914
FAY, SPOFFORD & THORNDIKE
ENGINEERS · PLANNERS · SCIENTISTS
5 BURLINGTON WOODS, BURLINGTON, MA 01803

COMMONWEALTH OF MASSACHUSETTS
GEORGE PROTASOWICKI
CIVIL
No. 41094
REGISTERED PROFESSIONAL ENGINEER
04-26-13

PREPARED FOR:
City of Quincy

1305 Hancock Street
Quincy, Massachusetts 02619
Tel: (617) 376-1362
Fax: (617) 376-1097
www.quincyma.gov

THIS DOCUMENT IS THE DESIGN PROPERTY AND COPYRIGHT OF EBI CONSULTING, INC. AND FOR THE EXCLUSIVE USE BY THE TITLE CLIENT. ANY DUPLICATION OR USE WITHOUT EXPRESS WRITTEN CONSENT OF THE CREATOR IS STRICTLY PROHIBITED.

DRAWING SCALES NOTED ARE FOR 24" x 36" SIZE PRINTED MEDIA ONLY. ALL OTHER PRINTED SIZES ARE DEEMED "NOT TO SCALE".

SUBMITTALS

NO.	DATE	DESCRIPTION	BY

DATE: April 26, 2013
PROJECT NUMBER: FST # LQ-013

PROJECT TITLE:
Town Brook
Open Space Improvements

Revere Road
Quincy, Massachusetts 02169
Norfolk County

ISSUED FOR:
Local Permitting
(Not Approved for Construction)

SHEET TITLE:
IRRIGATION DETAILS 1 OF 2

SCALE: AS SHOWN
DESIGNED BY: JCP
CHECKED BY: GP
SHEET NO: L-6
1 OF 2

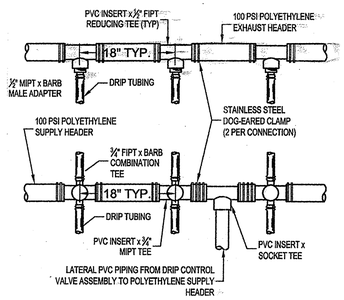

11 DRIP ZONE SUPPLY EXHAUST HEADER DETAIL
NOT TO SCALE

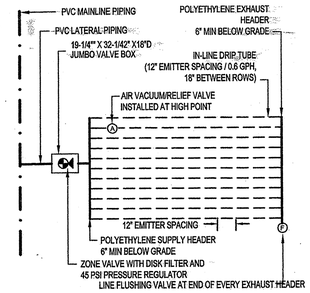

12 TYPICAL DRIP ZONE DETAIL
NOT TO SCALE

NOTES:
1. INSTALL ONE TUBE ABOVE GRADE PER TREE OR SHRUB FOR VISUAL INSPECTION. OTHER MULTI-EMITTER TUBING TO BE EMITTED TO FINISHED GRADE.

2. USE 6" STAKES FOR TUBING BELOW MULCH GRADE.

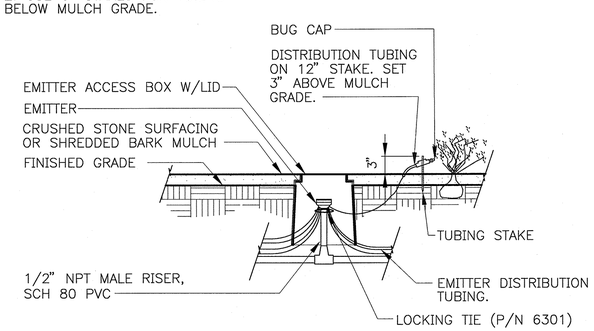

13 DRIP IRRIGATION – MULTI-OUTLET EMITTERS
NOT TO SCALE

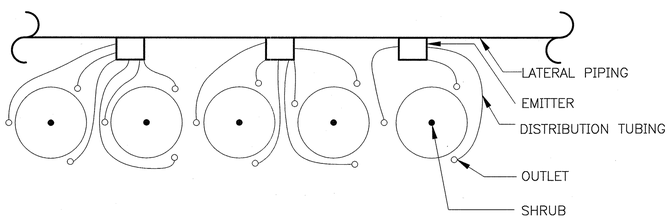

14 EMITTER OUTLET INSTALLATION FOR MEDIUM OR LARGE SHRUB TYP. @ 120 DEGREES O.C.
NOT TO SCALE

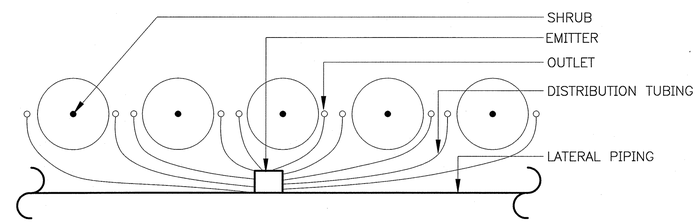

15 EMITTER OUTLET INSTALLATION FOR LOW SHRUBS TYP. @ 180 DEGREES O.C.
NOT TO SCALE

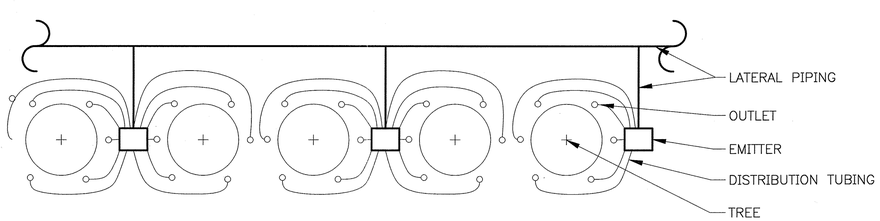

16 EMITTER OUTLET INSTALLATION FOR TREE TYP. @ 60 DEGREES O.C.
NOT TO SCALE

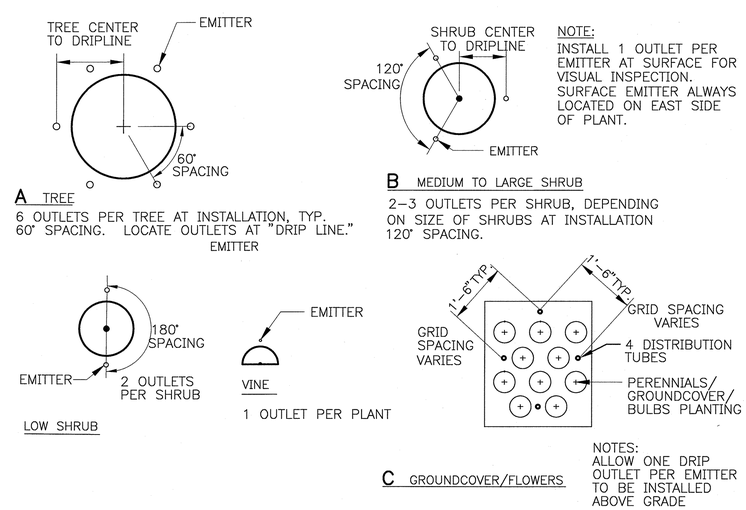

17 DRIP IRRIGATION – OUTLET SPACING
NOT TO SCALE

EBI Consulting
environmental | engineering | due diligence
21 B Street | Burlington, MA 01803
Tel: 781.273.2500 | Fax: 781.273.3311
www.ebiconsulting.com

ENGINEERS
FST
Since 1914
FAY, SPOFFORD & THORNDIKE
ENGINEERS · PLANNERS · SCIENTISTS
5 BURLINGTON WOODS, BURLINGTON, MA 01803

COMMONWEALTH OF MASSACHUSETTS
GEORGE PROTASOWICKI
CIVIL
No. 41094
REGISTERED PROFESSIONAL ENGINEER
04-26-13

PREPARED FOR:
City of Quincy

1305 Hancock Street
Quincy, Massachusetts 02619
Tel: (617) 376-1362
Fax: (617) 376-1097
www.quincyma.gov

THIS DOCUMENT IS THE DESIGN PROPERTY AND COPYRIGHT OF EBI CONSULTING, INC. AND FOR THE EXCLUSIVE USE BY THE TITLE CLIENT. ANY DUPLICATION OR USE WITHOUT EXPRESS WRITTEN CONSENT OF THE CREATOR IS STRICTLY PROHIBITED.

DRAWING SCALES NOTED ARE FOR 24" x 36" SIZE PRINTED MEDIA ONLY. ALL OTHER PRINTED SIZES ARE DEEMED "NOT TO SCALE".

SUBMITTALS

NO.	DATE	DESCRIPTION	BY

DATE: April 26, 2013
PROJECT NUMBER: FST # LQ-013

PROJECT TITLE:
Town Brook
Open Space Improvemnts

Revere Road
Quincy, Massachusetts 02169
Norfolk County

ISSUED FOR:
Local Permitting
(Not Approved for Construction)

SHEET TITLE:
IRRIGATION DETAILS 2 OF 2

SCALE: AS SHOWN
DESIGNED BY: JCP
CHECKED BY: GP –
SHEET NO: L-7
2 OF 2

T:\LQ-013 Quincy Peer Review\DWGS\Electrical\E1_Plan.dwg

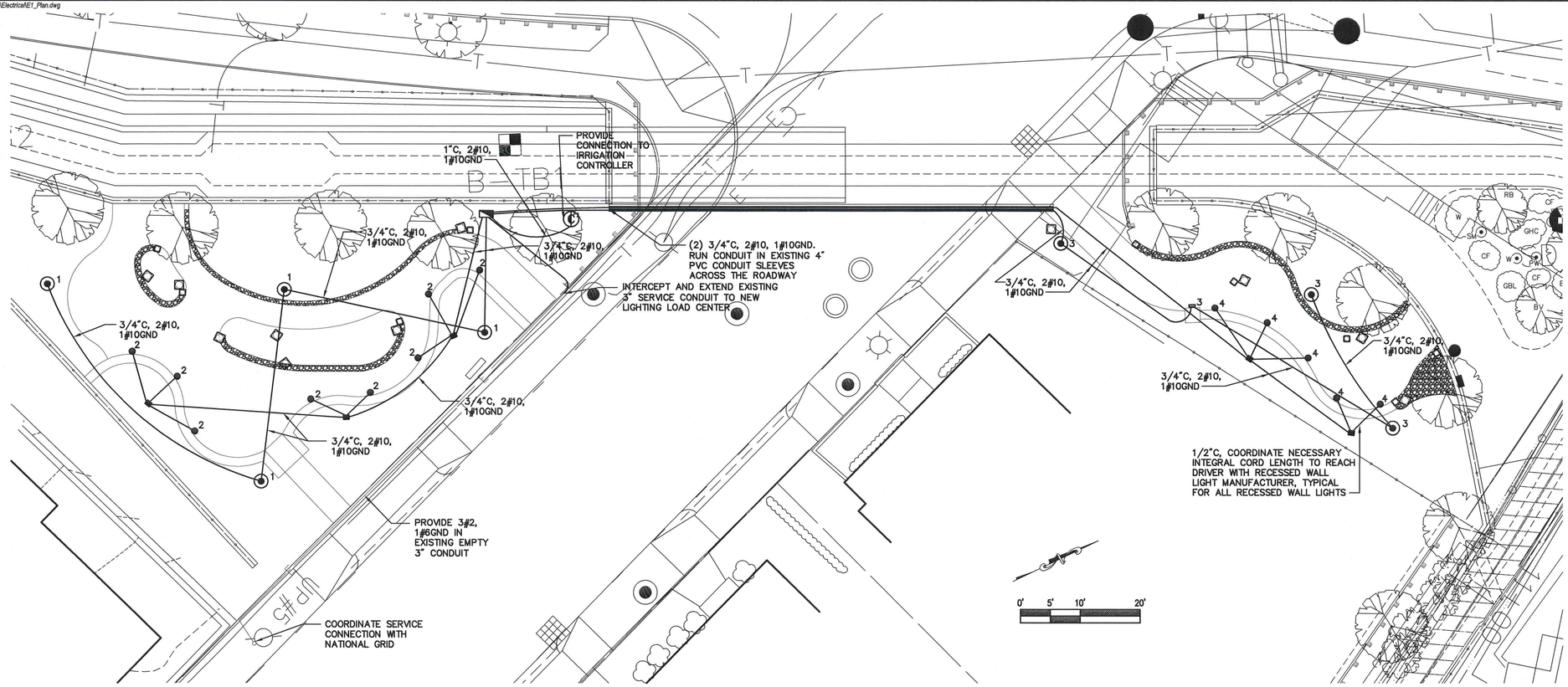

UPPER TOWN BROOK OPEN SPACE PARCEL AND LOWER "LEGION" TOWN BROOK OPEN SPACE PARCEL

1"=10'-0"

GENERAL NOTES

1. CONDUIT RUNS ARE SHOWN APPROXIMATE. LOCATIONS MAY BE ADJUSTED TO MATCH EXISTING AND PROPOSED CONDITIONS AS REQUIRED BY THE RESIDENT ENGINEER.
2. THE CONTRACTOR SHALL VISIT THE JOB SITE WITH THE CONTRACT DOCUMENTS AND INVESTIGATE ALL CONDITIONS AFFECTING THIS WORK. THE CONTRACTOR SHALL BE FAMILIAR WITH THE LOCATION AND SITE OF THE WORK, AND SHALL VERIFY DIMENSIONS, QUANTITIES, ACTUAL INSTALLATION CONDITIONS, CONFLICTS, AND STORAGE FACILITIES.
3. STATIONING FOR POLES IS GIVEN FROM THE BASELINE CLOSEST TO THE POLE. OFFSET DISTANCE FROM STREET IS DEFINED ON LIGHT POLE FOUNDATION DETAIL.
4. ALL WIRING IN THE PANELBOARDS AND CABINETS SHALL BE PERMANENTLY LABELED AND NEATLY INSTALLED.
5. ALL CONDUIT AND EQUIPMENT TO BE INSTALLED AND GROUNDED IN ACCORDANCE WITH THE LATEST EDITION OF THE NATIONAL ELECTRIC CODE, MASSACHUSETTS ELECTRICAL CODE AND APPLICABLE LOCAL CODES.
6. ALL EQUIPMENT AND MATERIALS SHALL BE UL LISTED FOR ITS INTENDED PURPOSE.
7. WIRE SIZES SHALL BE BASED ON AMERICAN WIRE GAGE (AWG), AS APPLIED TO COPPER CONDUCTORS. THE CONDUCTOR INSULATION SHALL BE TYPE USE-2 OR RHH-RHW-2.
8. WIRE AND CABLE FURNISHED AND USED SHALL BE NEW. WIRE AND CABLE SHALL BE PROTECTED FROM WEATHER AND DAMAGE DURING STORAGE AND HANDLING.
9. NO WIRE SHALL BE DRAWN IN TO ANY CONDUIT UNTIL ALL WORK WHICH MAY CAUSE CABLE DAMAGE IS COMPLETE.
10. THE CONTRACTOR SHALL CAREFULLY MARK THE PROPOSED LOCATION OF THE CONCRETE FOUNDATION AND THEN SHALL DETERMINE IF ANY UTILITIES, OR UNDERGROUND OR OVERHEAD OBSTRUCTION WILL PREVENT THE INSTALLATION AT THIS LOCATION. SIMILAR MARKING SHALL BE DONE FOR THE CONDUIT RUNS TO THE FOUNDATION. IF SUCH AN OBSTRUCTION IS EVIDENT, THE CONTRACTOR SHALL REQUEST PERMISSION FROM THE ENGINEER TO MOVE OR ADJUST THE LOCATION OF THE FOUNDATION.
11. THE CONTRACTOR SHALL PERFORM THE WORK IN A MANNER ACCEPTABLE TO THE ENGINEER SO THAT INTERFERENCE WITH OR INCONVENIENCE TO BUSINESS CONCERNS OR ABUTTERS ON ACCOUNT OF THE CONSTRUCTION WORK IS KEPT TO A MINIMUM. THE CONTRACTOR SHALL MAINTAIN SAFE AND REASONABLE ACCESS TO AND EGRESS FROM ABUTTING PROPERTIES AT ALL TIMES.
12. THE CONTRACTOR SHALL BE REQUIRED TO ADHERE TO ALL REGULATIONS IMPOSED BY THE TOWN OF QUINCY.
13. ELECTRICAL SERVICE TO EACH LIGHTING LOAD CENTER (HLLC) WILL BE PROVIDED BY NATIONAL GRID. CONTRACTOR SHALL PROVIDE CONDUIT AND WIRE UP POLE WITH ENOUGH SLACK FOR SERVICE CONNECTION. CONTRACTOR SHALL COORDINATE WITH NATIONAL GRID FOR SERVICE CONNECTION. CONTRACTOR IS RESPONSIBLE FOR ALL ELECTRIC SERVICE CONNECTIONS AND RELATED FEES FROM NATIONAL GRID.
14. INSTALL PHOTO ELECTRIC SWITCH IN HLLC.
15. CONDUIT SHALL BE SCH. 40 WITH METALLIC DETECTABLE CAUTION TAPE ABOVE. CONDUIT SHALL BE AS FOLLOWS:
    3" PVC CONDUIT FROM LIGHTING LOAD CENTER TO NATIONAL GRID SERVICE CONNECTION.
    UNLESS OTHERWISE NOTED, CONDUIT SHALL BE AS FOLLOWS:
    3/4" PVC CONDUIT BETWEEN LIGHTPOLES
    3/4" RGS CONDUIT TRANSITION INTO POLE FOUNDATION
    3/4" PVC CONDUIT BETWEEN LED DRIVERS
    1/2" PVC CONDUIT FROM LED DRIVERS TO WALL LIGHTS
16. ALL WIRE SHALL BE CONTINUOUS FROM POLE TO POLE WITHOUT RUNNING SPLICES IN CONDUITS. ALL WIRES SHALL EXTEND 24" OUT OF THE POLE PULL BOX, CONNECTED AT ENDS AND ROLLED BACK INTO THE PULL BOX.
17. SPLICES SHALL BE IN ACCORDANCE WITH SECTION 813 OF THE MASSHIGHWAY STANDARD SPECIFICATIONS FOR HIGHWAYS AND BRIDGES.
18. THE HOT LINE AND NEUTRAL CONNECTION IN THE POLE HANDHOLE SHALL BE WITH AN APPROVED STREET LIGHT FUSE CONNECTOR.18
19. THE LOCATIONS OF EXISTING SUBSURFACE UTILITIES SHOWN ON THE PLANS WERE COMPILED FROM AVAILABLE RECORD DRAWINGS AND ARE NOT WARRANTED TO BE CORRECT. THE LOCATIONS ARE APPROXIMATE ONLY AND IN SOME CASES MAY BE INCOMPLETE. THE CONTRACTOR SHALL NOTIFY ALL AGENCIES REQUIRED AND VERIFY THE LOCATION OF ALL EXISTING SUBSURFACE UTILITIES PRIOR TO PERFORMING ANY WORK.
20. THE CONTRACTOR SHALL VERIFY THE LOCATION OF EXISTING FEATURES PRIOR TO PERFORMING ANY WORK.
21. WHERE A NEW PAVEMENT SHALL MEET EXISTING PAVEMENT, THE JOINT SHALL BE SAWCUT TO A NEAT VERTICAL LINE.
22. THE CONTRACTOR SHALL MAINTAIN AREAS IN AND AROUND THE WORK ZONE FREE AND CLEAR OF DEBRIS AT ALL TIMES. NO STOCKPILING OF EQUIPMENT OR MATERIAL SHALL BE PERMITTED OUTSIDE OF FIXED WORK ZONES.
23. THE CONTRACTOR SHALL INSTALL OTHER NECESSARY TEMPORARY REGULATORY AND WARNING SIGNS DURING CONSTRUCTION AS REQUIRED BY THE ENGINEER FOR OTHER INCIDENTAL CONSTRUCTION ACTIVITIES. ALL SIGNAGE AND TRAFFIC CONTROL DEVICES USED MUST CONFORM TO THE "MANUAL ON UNIFORM TRAFFIC CONTROL DEVICES", 2003 EDITION AND THE LATEST ADDENDUMS.
24. ALL LUMINAIRES SHALL BE INSTALLED SO THAT THEIR ORIENTATION IS PERPENDICULAR TO THE ADJACENT PARK PATH.
25. ALL EQUIPMENT SHALL BE INSTALLED PER THE MANUFACTURER'S RECOMMENDATIONS UNLESS OTHERWISE NOTED.

ELECTRICAL LEGEND

X	16 FOOT POLE MOUNTED LUMINAIRE, X DENOTES CIRCUIT NUMBER
X	WALL MOUNTED KEYSTONE LIGHT, X DENOTES CIRCUIT NUMBER
X	RECESSED WALL LIGHT, X DENOTES CIRCUIT NUMBER
	LIGHTING LOAD CENTER
	UNDERGROUND CONDUITS AND WIRING
	DIRECT BURIED DRIVER VAULT

EBI Consulting
environmental | engineering | due diligence
21 B Street | Burlington, MA 01803
Tel: 781.273.2500 | Fax: 781.273.3311
www.ebiconsulting.com

ENGINEERS
FST
Since 1914
FAY, SPOFFORD & THORNDIKE
ENGINEERS · PLANNERS · SCIENTISTS
5 BURLINGTON WOODS, BURLINGTON, MA 01803

COMMONWEALTH OF MASSACHUSETTS
CREG W.P. CASCADDEN
ELECTRICAL
NO. 29511
REGISTERED PROFESSIONAL ENGINEER
4/26/13

PREPARED FOR:
City of Quincy

1305 Hancock Street
Quincy, Massachusetts 02619
Tel: (617) 376-1362
Fax: (617) 376-1097
www.quincyma.gov

THIS DOCUMENT IS THE DESIGN PROPERTY AND COPYRIGHT OF EBI CONSULTING, INC. AND FOR THE EXCLUSIVE USE BY THE TITLE CLIENT. ANY DUPLICATION OR USE WITHOUT EXPRESS WRITTEN CONSENT OF THE CREATOR IS STRICTLY PROHIBITED.

DRAWING SCALES NOTED ARE FOR 24" x 36" SIZE PRINTED MEDIA ONLY. ALL OTHER PRINTED SIZES ARE DEEMED "NOT TO SCALE".

SUBMITTALS

NO.	DATE	DESCRIPTION	BY

DATE: April 26, 2013
PROJECT NUMBER: FST # LQ-013

PROJECT TITLE:
Town Brook
Open Space Improvements

Revere Road
Quincy, Massachusetts 02169
Norfolk County

ISSUED FOR:
Local Permitting
(Not Approved for Construction)

SHEET TITLE:
ELECTRICAL LAYOUT

SCALE: AS SHOWN
DESIGNED BY: MGU
CHECKED BY: RAB
SHEET NO: E-1

T:\LQ-013 Quincy Peer Review\DWGS\Electrical\E2_Lighting Details.dwg

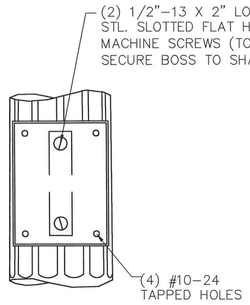

BOSS WITHOUT PLAQUE

N.T.S.

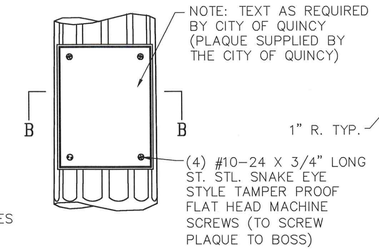

BOSS WITH PLAQUE

N.T.S.

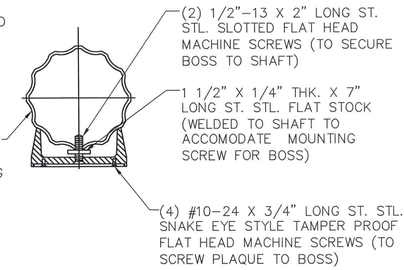

SECTION B–B

N.T.S.

BOSS DETAIL

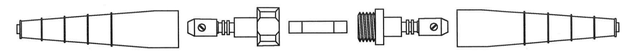

RATING: 600 VOLTS – 20 AMPS.	
FUSE SIZE: 1 1/2" x 13/32" O.D. – FERRULE 3/8"	
CONNECTOR SIZE: 8 1/2" x 7/8" O.D.	
CONNECTOR TYPE:	FUSE – QUICK DISCONNECT SET SCREW TYPE CONNECTION
CONNECTOR MATERIAL:	MOLDED PLASTIC BODY WITH RUBBER INSULATING BOOTS.
CONDUCTOR SIZE:	LINE AND LOAD #2 AWG THROUGH #12 AWG
REQUIRED FEATURES:	WATERTIGHT NO TAPING OR SEALANT REQUIRED
–FUSE HELD IN LOAD SIDE WHEN CONNECTOR IS DISCONNECTED. –PROVIDE APPROVED FUSE HOLDER WITH "DUMMY" ROD BLANK FUSE FOR NEUTRALS	

FUSE HELD IN LOAD SIDE WHEN CONNECTOR IS DISCONNECTED.

STRAIGHT THRU CONNECTOR

NOT TO SCALE

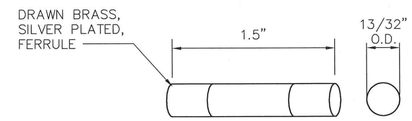

SIZE: MIDGET
TYPE: CURRENT LIMITING FUSE
VOLTAGE RATING: 277/480 VOLTS
USE: PROTECTION OF AREA LIGHTING EQUIPMENT

FUSES

NOT TO SCALE

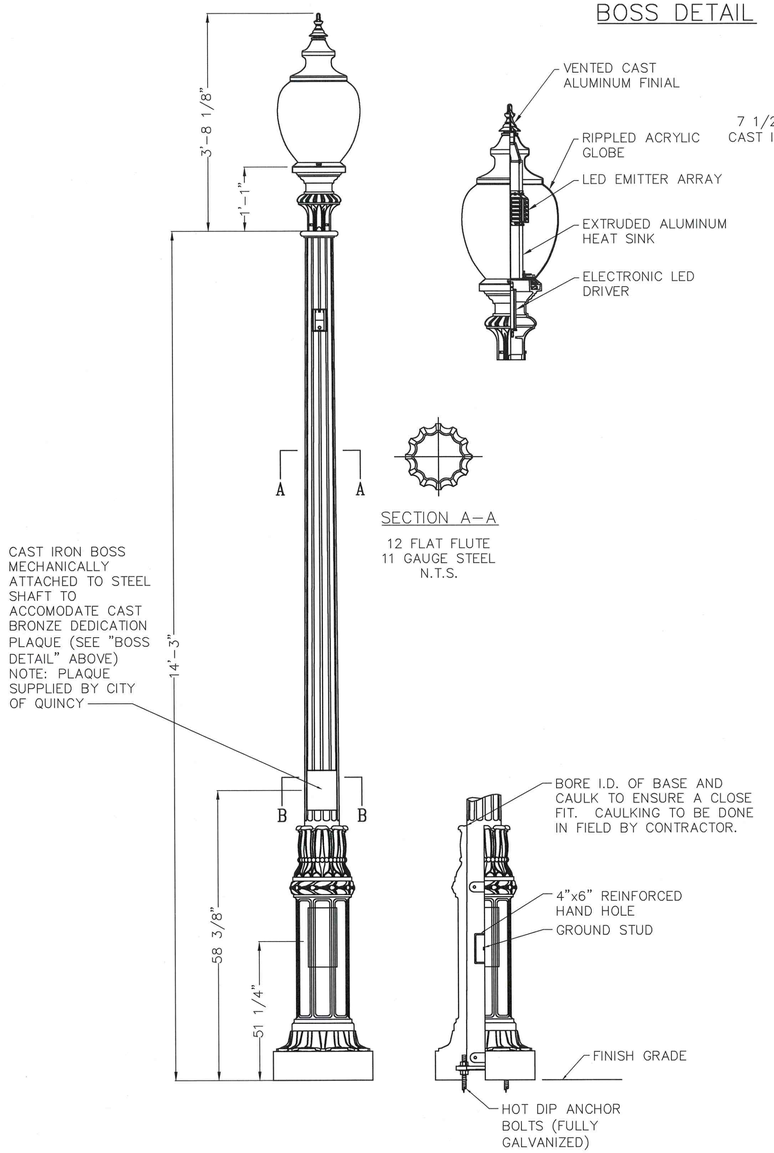

SECTION A–A

12 FLAT FLUTE
11 GAUGE STEEL
N.T.S.

LIGHT POLE AND LUMINAIRE DETAIL

NOT TO SCALE

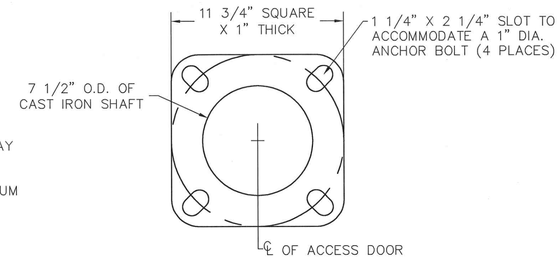

TOP VIEW OF BASE PLATE

N.T.S.

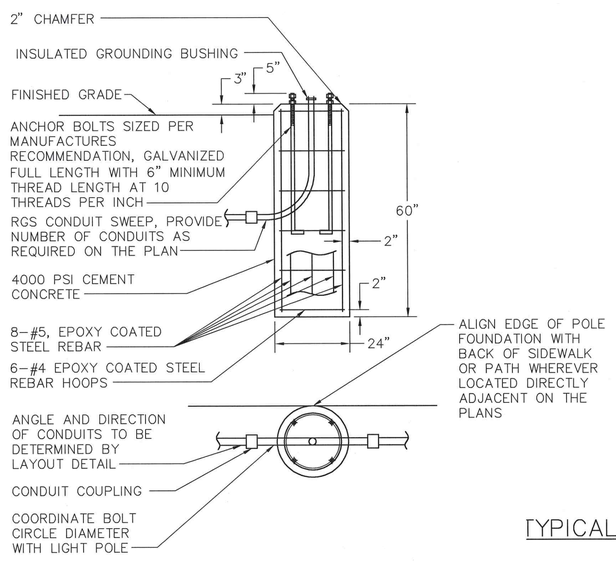

POLE BASE DETAIL

NOT TO SCALE

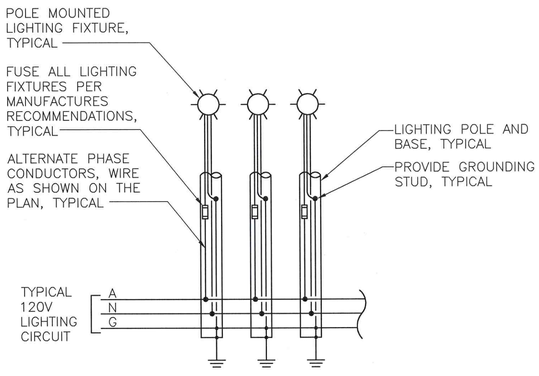

TYPICAL POLE LIGHTING WIRING SCHEMATIC DIAGRAM

NOT TO SCALE

EBI Consulting
environmental | engineering | due diligence
21 B Street | Burlington, MA 01803
Tel: 781.273.2500 | Fax: 781.273.3311
www.ebiconsulting.com

ENGINEERS
FST
Since 1914
FAY, SPOFFORD & THORNDIKE
ENGINEERS · PLANNERS · SCIENTISTS
5 BURLINGTON WOODS, BURLINGTON, MA 01803
COMMONWEALTH OF MASSACHUSETTS
CREG W.P. CASCADDEN
ELECTRICAL
No. 29511
REGISTERED PROFESSIONAL ENGINEER
4/26/13

PREPARED FOR:
City of Quincy

1305 Hancock Street
Quincy, Massachusetts 02619
Tel: (617) 376-1362
Fax: (617) 376-1097
www.quincyma.gov

THIS DOCUMENT IS THE DESIGN PROPERTY AND COPYRIGHT OF EBI CONSULTING, INC. AND FOR THE EXCLUSIVE USE BY THE TITLE CLIENT. ANY DUPLICATION OR USE WITHOUT EXPRESS WRITTEN CONSENT OF THE CREATOR IS STRICTLY PROHIBITED.

DRAWING SCALES NOTED ARE FOR 24" x 36" SIZE PRINTED MEDIA ONLY. ALL OTHER PRINTED SIZES ARE DEEMED "NOT TO SCALE".

SUBMITTALS

NO.	DATE	DESCRIPTION	BY

DATE: April 26, 2013

PROJECT NUMBER: FST # LQ-013

PROJECT TITLE:
Town Brook
Open Space Improvements

Revere Road
Quincy, Massachusetts 02169
Norfolk County

ISSUED FOR:
Local Permitting
(Not Approved for Construction)

SHEET TITLE:
ELECTRICAL DETAILS

SCALE: AS SHOWN

DESIGNED BY: MGU

CHECKED BY: RAB

SHEET NO: E-2

T:\LQ-013 Quincy Peer Review\DWGS\Electrical\E3_Lighting Control Details.dwg

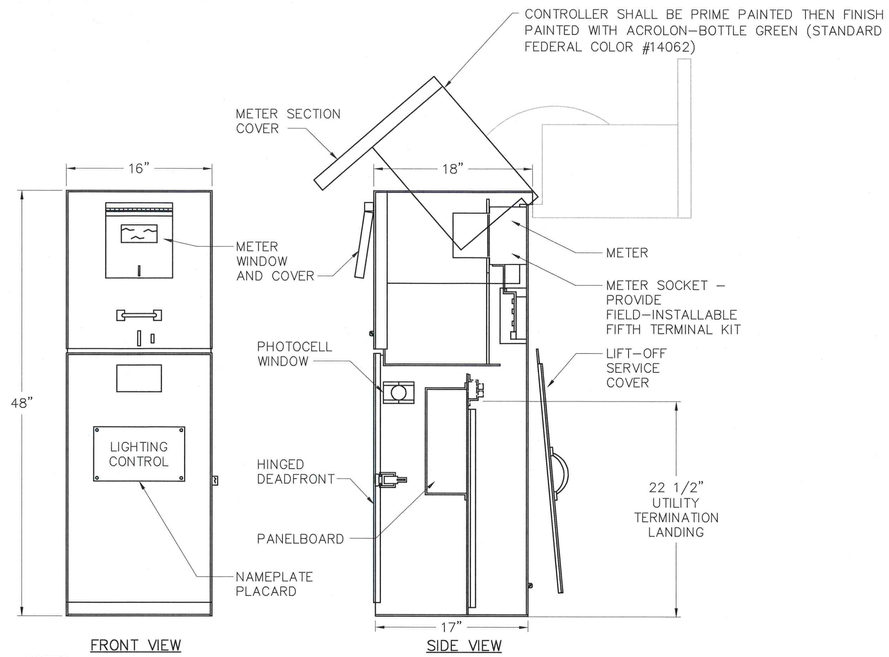

NOTES:

1. PROVIDE MILBANK CP3B51110A22SL1 MODIFIED WITH 100 AMP CONTACTOR, PHOTOCELL, FIFTH TERMINAL KIT FOR USE WITH RINGLESS METER SOCKETS (COORDINATE WITH ELECTRIC UTILITY FOR METER SOCKET REQUIREMENTS), MOUNTING BASE, ANCHOR BOLT KIT, GFCI RECEPTACLE, AND INTERNAL LIGHT FIXTURE OR EQUIVALENT BY MYERS POWER PRODUCTS, OR VIT STRONG BOX.

LIGHTING CONTROL CABINET DETAIL

NOT TO SCALE

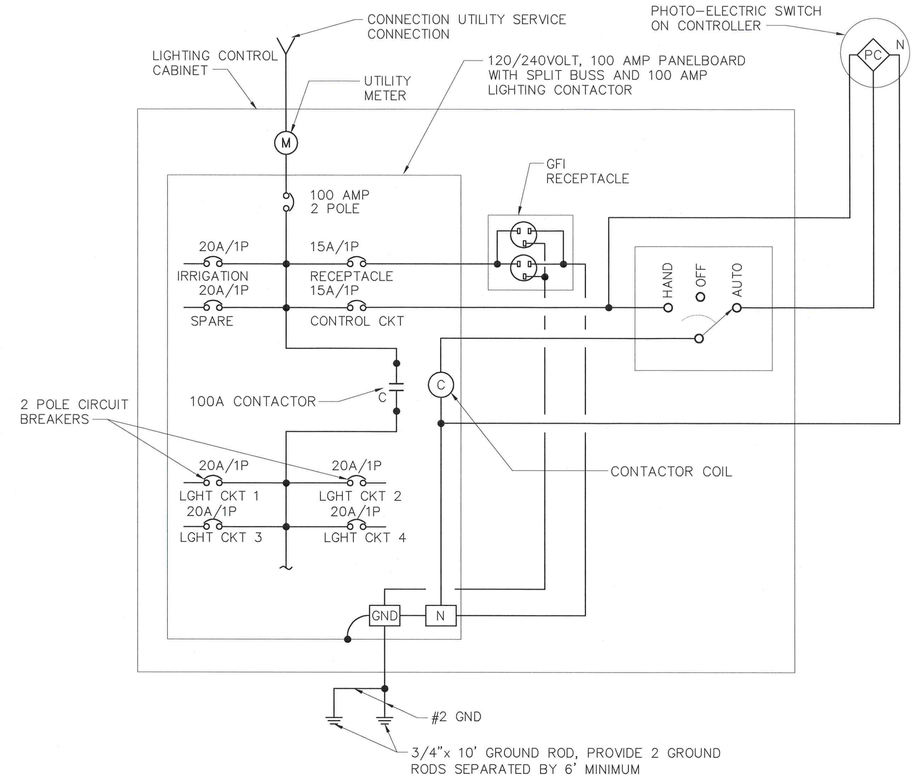

ONE LINE DIAGRAM

NOT TO SCALE

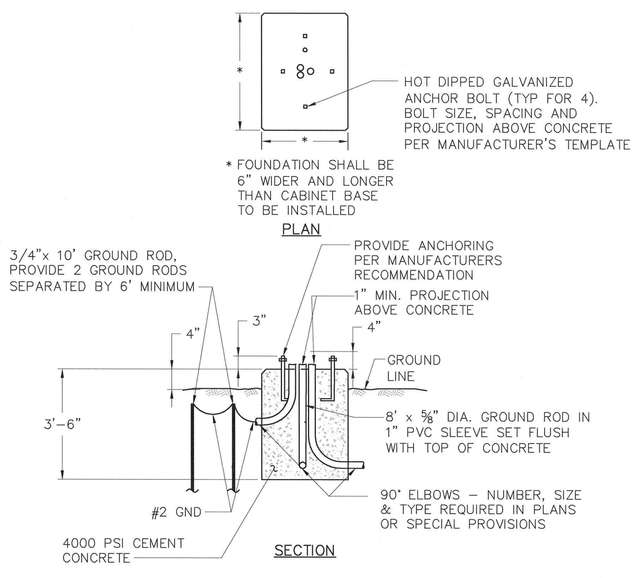

NOTE: ALL EXPOSED EDGES SHALL BE CHAMFERED ¾".

CONCRETE FOUNDATION FOR LIGHTING CONTROL CABINET

NOT TO SCALE

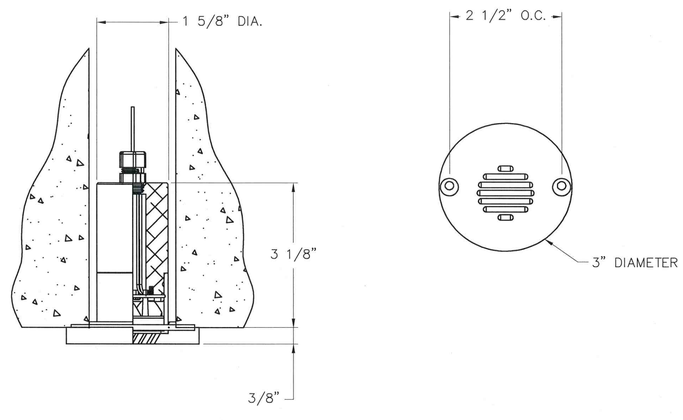

RECESSED WALL LIGHT DETAIL

NOT TO SCALE

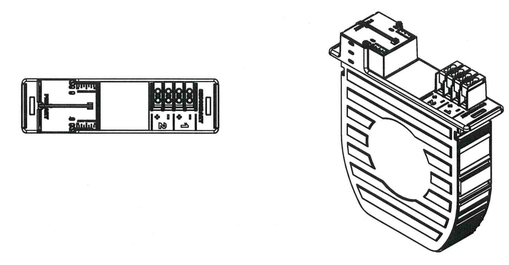

LED DRIVER DETAIL

NOT TO SCALE

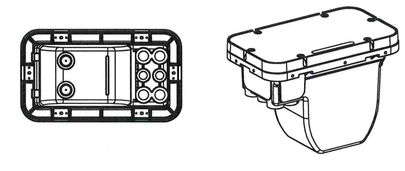

DIRECT BURIED DRIVER ENCLOSURE DETAIL

NOT TO SCALE

EBI Consulting
environmental | engineering | due diligence
21 B Street | Burlington, MA 01803
Tel: 781.273.2500 | Fax: 781.273.3311
www.ebiconsulting.com

ENGINEERS FST Since 1914

FAY, SPOFFORD & THORNDIKE
ENGINEERS · PLANNERS · SCIENTISTS
5 BURLINGTON WOODS, BURLINGTON, MA 01803

4/26/13

PREPARED FOR:
City of Quincy

1305 Hancock Street
Quincy, Massachusetts 02619
Tel: (617) 376-1362
Fax: (617) 376-1097
www.quincyma.gov

THIS DOCUMENT IS THE DESIGN PROPERTY AND COPYRIGHT OF EBI CONSULTING, INC. AND FOR THE EXCLUSIVE USE BY THE TITLE CLIENT. ANY DUPLICATION OR USE WITHOUT EXPRESS WRITTEN CONSENT OF THE CREATOR IS STRICTLY PROHIBITED.

DRAWING SCALES NOTED ARE FOR 24" x 36" SIZE PRINTED MEDIA ONLY. ALL OTHER PRINTED SIZES ARE DEEMED "NOT TO SCALE".

SUBMITTALS

NO.	DATE	DESCRIPTION	BY

DATE: April 26, 2013

PROJECT NUMBER: FST # LQ-013

PROJECT TITLE:
Town Brook
Open Space Improvements

Revere Road
Quincy, Massachusetts 02169
Norfolk County

ISSUED FOR:
Local Permitting
(Not Approved for Construction)

SHEET TITLE:
ELECTRICAL DETAILS

SCALE: AS SHOWN

DESIGNED BY: MGU

CHECKED BY: RAB

SHEET NO: E-3