City of Quincy

City Hall
1305 Hancock Street
Quincy, Massachusetts 02169

Purchasing Department

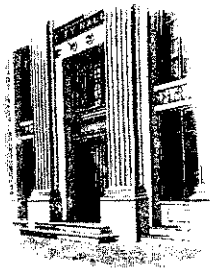

Thomas P. Koch
Mayor

Kathryn R. Hobin
Purchasing Agent
Phone: (617) 376-1060
Fax: (617) 376-1074

"NOTIFICATION"

INVITATION TO BID
ADAMS STREET-ROAD IMPROVEMENTS-SUMMER 2013
JULY 25, 2013 @ 12:00 NOON

PLEASE NOTE: THIS IS A COPY OF THE <u>COMPLETE BID SPECIFICATIONS</u>. IN AN EFFORT TO HELP WITH THE ENVIRONMENT AND SAVE PAPER, PLEASE USE THIS FOR REFERENCE ONLY.

<u>PLEASE CHECK THE WEBSITE FOR A SEPARATE FILE FOR PRINTING OUT JUST THE BID DOCUMENTS THAT YOU WILL NEED TO SUBMIT YOUR BID.</u>

<u>"DON'T FORGET TO CHECK FOR ANY ADDENDUM BEFORE SUBMITTING BID"</u>

The Department of Public Works for the City of Quincy, Massachusetts is seeking sealed bids for **Adams Street Road Improvements – Summer 2013** until 12:00 noon local time **Thursday, JULY 25, 2013**, in the offices of the Purchasing Agent, 1305 Hancock St., Quincy, Massachusetts 02169, at which time and place all bids will be publicly opened and read aloud.

The work under this contract consists of: excavation of bituminous concrete by cold planer, installation of new top courses; installation of new cement sidewalks, resetting of existing granite curbing and installation of new granite curbing. Traffic control signal improvements, installation of trees, loam and seed as required and all related work to complete the project.

All questions regarding this bid should be directed to Kathryn R. Hobin, Purchasing Agent through a fax: 617-376-1074 and email: khobin@quincyma.gov and cc to kimtrillcott@quincyma.gov

Inquiries must be submitted no later than Friday, July 19, 2013 @ 4:00 p.m.

The Purchasing Department is requesting that if you have printed out a copy of this bid, please send a confirming email, so that we may be able to keep track of a plan holders list to send out addenda notices via email addresses.

If you have received this bid from either the City of Quincy Website or through an email it is your responsibility to check for addenda (at www.quincyma.gov) before you turn in your proposal. The City of Quincy will not be responsible any bids received omitting addenda acknowledgement.

<u>The Purchasing Department</u>

Kathryn R. Hobin	*Kim R. Trillcott Caporale*	*Meredith A. Marini*	*Franca Alberti*
Purchasing Agent	*Assistant Contract Supervisor*	*Assistant Contract Coordinator*	*Principal Clerk*
khobin@quincyma.gov	*kimtrillcott@quincyma.gov*	*mmarini@quincyma.gov*	*fdevito@quincyma.gov*

If you have printed this bid from the City of Quincy's Website or through an email, it is your responsibility to check for addenda at www.quincyma.gov before you turn in your proposal. "Please send an acknowledgment that you have printed out this bid via email to; kimtrillcott@quincyma.gov" The City of Quincy will not be responsible for any bids received omitting any addenda acknowledgement.

Thank you

City of Quincy

City Hall
1305 Hancock Street
Quincy, Massachusetts 02169

Purchasing Department

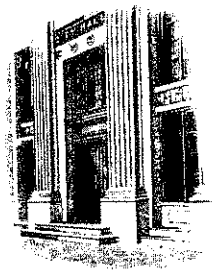

Thomas P. Koch
Mayor

Kathryn R. Hobin
Purchasing Agent
Phone: (617) 376-1060
Fax: (617) 376-1074
TTY/TDD (617) 376-1375

If you have printed out the specifications for **"ADAMS STREET-ROAD IMPROVEMENT-SUMMER 2013"**, please use this check list to make sure that you have printed out all the required forms and filled them out when you have submitted your completed bid. **Deadline: JULY 25, 2013 @ 12:00 noon.**

CHECK LIST	REQUIRED FORMS	PAGE #
_____	BID FORM	00410-1 thru 00410-7
_____	Bid Form/Relevant Previous Experience	00410-10
_____	Bidder's Statement of Qualifications	00410-11 & 12
_____	Signature Authorization	00410-13
_____	Signature Page	00410-14
_____	Tax Compliance	00410-15
_____	5% Bid Bond (or Surety bond)	00411-1 & 2
_____	Right to Know Law	00451-1
_____	Non-Collusion Affidavit	00451-2
_____	Certification Non-Segregated Facilities	00451-3
_____	Affidavit Regarding Prior Labor Disputes	00451-4
_____	OSHA 10 Form	00452-1
_____	OSHA 10 Form for Sub bidders (if applicable)	00452-2
_____	Indemnity Agreement	00521-1
_____	Contractor's Certification	00525-1

ADAMS STREET
ROAD IMPROVEMENTS
SUMMER – 2013

THE CITY OF QUINCY
DEPARTMENT
OF PUBLIC WORKS

THE HONORABLE THOMAS P. KOCH
MAYOR

KATHRYN R. HOBIN
PURCHASING AGENT

DANIEL G. RAYMONDI
COMMISSIONER OF PUBLIC WORKS

SHAWN P. HARDY, P.E.
CITY ENGINEER

TABLE OF CONTENTS

DIVISION 0 - CONTRACT BID DOCUMENTS

Section No.	Description/Title	No. of Pages
00001	Title Page	1
00005	Table of Contents	3
00100	Invitation to Bid	1
00200	Instructions to Bidders	10
00410	Bid Form/Signature Authorization Form/ Tax Compliance	16
00411	Bid Bond	2
00451	Certifications & Affidavits required w/ Bid	6
00452	OSHA Ten Forms	2
00510	Notice of Award	1
00520	Agreement	4
00521	Indemnity Agreement	1
00525	Contractors Certification	1
00550	Notice to Proceed	1
00610	Performance Bond	2
00615	Payment Bond	2
00620	Certificate of Insurance	1
00700	General Conditions	36
00800	Supplementary Conditions – Part I Amendments to General Conditions	17
00811	Special Provisions – Monthly Price Adjustment for Hot Mix Asphalt (HMA) Mixtures	2
00812	Special Provisions – Monthly Price Adjustment for Diesel Fuel and Gasoline	1
00814	Special Provision – Price Adjustment for Portland Cement Concrete Mixes	1
00850	Supplementary Conditions – Part II Statutory Requirements	35

DIVISION ONE - TECHNICAL SPECIFICATIONS (No Payment Items)

Section No.	Description/Title	No. of Pages
01000	Index	1
01010	Summary of Work	4
01045	Safety Controls and Signs for Construction Operations	3
01050	Control of Work	6
01055	Temporary Construction Facilities	2
01150	Measurement and Payment	5
01170	Special Provisions	7
01300	Submittal Requirements	5
01605	Use and Control of Materials	3
01625	Environmental Protection Dust Control	5

DIVISION TWO - TECHNICAL SPECIFICATIONS

Section No.	Description/Title	Pay Item No.
02000	Index	
02105	Tree Stump Removal	102.090
02105	Tree Root System, Cut Back & Remove	102.190
02120	Unclassified Excavation	120.100
02120-2	Bit. Conc. Excavation by Cold Planer	129.000
02150	Gravel Borrow for Sidewalks	151.220
02170	Fine Grading & Compaction	170.000
02220	Drainage Structure, Adjust	220.000
02200	Drainage Structure, Remodel	220.500
02220	Sanitary Structure, Adjust	220.700
02200	Sanitary Structure, Remodel	220.800
02225	Replacement Frame with Grate or Cover	222.000
02350	Gate Box Adjust	358.000
02351	Service Box	381.000
02410	Gravel for Base Course	405.000
02420	Class I Bituminous Concrete – Base Course	420.000
02460	Class I Bituminous Concrete – Top Course	460.000
02460	Class I Bituminous Concrete – Leveling course	460.500
02460	Bituminous for Tack/Prime Coat	463.000
02471	Hot Mix Asphalt for Misc. Use	472.000
02472	Flexible Porous Pavement	473.000
02505	Granite Curb-Type VA-3 Straight	503.000
02505	Granite Curb-Type VA-3 Curved	503.100
02510	Granite Curb Corner	517.000
02580	Curb Removed & Reset	580.000

02580	Curb Corner Removed & Reset	583.000
02705	Cement Concrete for Walks	701.000
02705	Cement Concrete @ Drives	701.100
02705	Cement Concrete for WCR's with detectable warning panels	701.310
02710	Bituminous Concrete Sidewalks	702.100
02740	Mobilization/Demobilization @ 5%	748.000
02750	Loam Borrow	751.000
02765	Seeding	765.000
02766	Princeton Elm Tree 2.5-3" caliper	775.000
02766	Japanese Tree Lilac 2.5-3" caliper	776.000
02767	3-Inch Electrical Conduit, Type NM-plastic (UL)	804.300
02768	12in x 12in Pullbox (SD2.031)	811.310
02769	Beale/Adams St. Traffic Improvement per plan	815.010
02860	4-Inch White Line Reflectorizes Thermoplastic	866.040
02860	12-Inch White Line Reflectorizes Thermoplastic	866.120
02860	4-Inch Yellow Line Reflectorizes Thermoplastic	867.040
02910	Concrete	904.000
02990	Traffic Police Details	999.001

APPENDICES

"Appendix A"		1 page
	Commonwealth of Massachusetts Division of Labor & Workforce Management State Minimum Wage Rates	36 pages

CITY OF QUINCY, MASSACHUSETTS
Department of Public Works

Thomas P. Koch
Mayor

Daniel G. Raymondi
Commissioner

INVITATION TO BID

The Department of Public Works for the City of Quincy, Massachusetts is seeking sealed bids for **Adams Street Road Improvements – Summer 2013** until 12:00 noon, local time **Thursday, July 25, 2013**, in the offices of the Purchasing Agent, 1305 Hancock St., Quincy, Massachusetts 02169, at which time and place all bids will be publicly opened and read aloud.

The work under this contract consists of: excavation of bituminous concrete by cold planer, installation of new top courses; installation of new cement sidewalks, resetting of existing granite curbing and installation of new granite curbing. Traffic control signal improvements, installation of trees, loam and seed as required and all related work to complete the project.

All work under this contract shall be completed within Sixty (60) calendar days. Funding source will be Chapter 90, (Mass. Highway Certification is required) and CIP Budget.

Detailed specifications are available on-line at the City of Quincy's website, www.quincyma.gov and also available at the Office of the Purchasing Agent, Quincy City Hall, 1305 Hancock Street, Quincy, Massachusetts, 02169, between the hours of 8:30 AM and 4:30 PM for a non-refundable printing charge of $50.00. Specifications will be available July 10, 2013.

Each bid shall be accompanied by a bid security in the amount of five percent (5%) of the total value of the bid in the form of a bid bond or certified/treasurer's check.

The bidding and award of this contract shall be in full compliance with Massachusetts General Laws, Chapter 30, Section 39M, as last revised. All applicable Federal, State and City of Quincy regulations in relation to and subject to the minimum wage rates set under the Massachusetts Prevailing Wage Law Chapter 149, §26 to 27H and/or any applicable federal rates. The City reserves the right to waive any informality in or to reject any or all bids when such an action is deemed in the best interests of the City.

Non-responsive and/or unbalanced bids may be rejected.

Thomas P. Koch
Mayor

Daniel G. Raymondi
Commissioner of Public Works

Advertise		Req. No.
The Quincy Sun	July 11, 2013	S072513
The Central Register	July 10, 2013	

1305 Hancock St., Quincy MA 02169
Telephone: (617) 376-1060 Fax: (617) 376-1074
Printed on Recycled Paper

INSTRUCTIONS TO BIDDERS

ARTICLE 1 PROJECT IDENTIFICATION

1.1 Owner: City of Quincy, Massachusetts

1.2 Awarding Authority: Kathryn R. Hobin
Purchasing Agent
1305 Hancock St., Quincy, MA 02169

1.3 Project Name:

1.4 Funding:

a. The City of Quincy

b. Commonwealth of Massachusetts

Funds for all work included under this contract have not been authorized, as yet. Consequently, all and/or any portion of the work may be deleted or postponed indefinitely. All work done pursuant to this bid shall be subject to funding provided by any public agency, as applicable, and authorization by the Mayor and the City Council.

1.5 The following Documents are required to be submitted with the Bids. Failure to comply with these requirements may render the Bid non-responsive and thus be disqualified.

a. Bid Forms (all original signatures) (Section 00410).
b. Bid Bond (Section 00411).
c. Affidavits and certifications (Section 0041).

ARTICLE 2 QUALIFICATIONS OF BIDDERS

2.1 Bidders may be investigated by the City to determine if they are qualified to perform the work. Bidders shall submit within five (5) calendar days of the City's or Engineer's request, written evidence of such information and data necessary to make this determination.

2.2 The investigation of a Bidder will seek to determine whether the organization is adequate in size, is authorized to do business in the project jurisdiction, has had previous experience and whether available equipment and financial resources are adequate to assure the City that the work will be completed in accordance with the terms of the Agreement. The amount of other work to which the Bidder is already committed may also be considered.

2.3 The City reserves the right to reject any Bid if the evidence submitted by, or the investigation of such Bidder fails to satisfy the City that such Bidder is properly qualified to carry out the obligations and the work included in the Contract Documents.

ARTICLE 3 COPIES OF CONTRACT DOCUMENTS

3.1 Complete sets of Contract Documents shall be used in preparing Bids; neither the City nor the Engineer assumes any responsibility for errors or misinterpretations resulting from the use of incomplete sets of Contract Documents.

3.2 The City and the Engineer in making copies of Contract Documents available do so only for the purpose of obtaining bids on the Work and do not confer a license or grant permission for any other use.

ARTICLE 4 EXAMINATION OF CONTRACT DOCUMENTS AND SITE

4.1 Before submitting a Bid, each Bidder must (a) examine the Contract Documents thoroughly, (b) visit the site to familiarize themselves with local conditions that may in any manner affect cost, progress or performance of the Work, (c) familiarize themselves with Federal, State and local laws, ordinances, rules and regulations that may in any manner affect cost, progress, or performance of the work; and (d) study and carefully correlate Bidder's observations with the requirements of the Contract Documents.

4.2 All information given in the Drawings and the other bid documents relating to sub-surface and other conditions, natural phenomena, existing utilities, pipelines, other structures, etc. is from the best sources available to the City. All such information is furnished only for the information and convenience of the Bidders and is not guaranteed.

4.3 Before submitting the Bid, each Bidder may, at his own expense, make such additional investigations and tests as the Bidder may deem necessary to determine the accuracy of their Bid for performance of the work in accordance with the time, price and other terms and conditions of the Contract Documents.

4.4 Upon request, the City will provide each Bidder access to the site to conduct such investigations and tests as each Bidder may deem necessary for submission of the Bid.

4.5 The lands upon which the work is to be performed and rights-of-way for access thereto are identified on the Drawings.

4.6 The submission of a Bid will constitute an incontrovertible representation by the Bidder that he has complied with every requirement of this Article 4 and that the Contract Documents are sufficient in scope and detail to indicate and convey understanding of all terms and conditions for performance of the work.

ARTICLE 5 INTERPRETATIONS

5.1 All questions about the meaning or intent of the Contract Documents must be received in writing by the City of Quincy Purchasing Department, 1305 Hancock St., Quincy, MA 02169, prior to the Bid Opening Date, as set forth in the Invitation to Bid.

5.2 Written clarifications or interpretations will be issued through Addenda. No addenda, except via FAX transmission or email, will be issued any later than 72 hours before the bid opening date. Only questions answered by formal written Addenda will be binding. Oral and other clarifications or interpretations will be without legal effect. Addenda will be sent out to all parties recorded to have received the Contract Documents.

5.3 Each Bidder shall be responsible for determining all Addenda issued have been received and incorporated into their Bid.

5.4 **A BID WHICH INCLUDES, FOR ANY ITEM, A BID PRICE THAT IS ABNORMALLY HIGH OR LOW, MAY BE REJECTED AS AN UNBALANCED BID.**

5.5 The quantities in the Bid Form are being set forth as a basis for the comparison of bids only and the actual amount of work may not correspond therewith.

5.6 The City reserves the right to delete all or any portion of the work or add new work or to decrease or increase the scope of any item of the work to be done under this Contract either prior to executing the Contract or at any time during the life of the Contract. Exercise by the City of the above rights shall not constitute any grounds or basis of claims for damages or for a loss of anticipated profits.

Also, an increase or a decrease of quantity for any bid item (regardless of its magnitude) shall not be regarded as a grounds or basis for any increase or decrease in the Contract unit prices, nor in the time allowed for the completion of the work except as provided for in the Contract.

ARTICLE 6 PRE-BID CONFERENCE: Refer to Section 00100 - Invitation to Bid.

ARTICLE 7 BID SECURITY

7.1 Each bid must be accompanied by a bid bond or certified check or a treasurer's/cashiers check issued by a bona fide bank or trust company, payable to the City of Quincy. The Bid Security shall be in the amount of five percent (5%) of the Total Bid Price. The Bid Security shall be sealed in a separate envelope form the Bid and then attached to the envelope containing the Bid. All Bid Securities except those of the three lowest responsible and eligible bidders will be returned within ten calendar days after the opening of bids. All Bid securities will be returned on the execution of the Agreement, or if no award is made, within sixty calendar days after the actual Bid Opening Date, unless the bid security is forfeited under the conditions stipulated herein.

7.2 In case a party to whom a Contract is awarded shall fail or neglect to execute the Agreement and furnish the satisfactory bonds within the time specified, the City may determine that the bidder has abandoned the Contract, and thereupon the Bid Forms and acceptance thereof shall be null and void, and the Bid Security accompanying the Bid form shall be forfeited to the City as liquidated damages for such failure or neglect and to indemnify the said City for any loss which may be sustained by failure of the Bidder to execute the Agreement and furnish the bonds aforesaid, provided that the amount forfeited to the City shall not exceed the difference between the Bid Price of said Bidder and that of the next lowest responsible and eligible Bidder and provided further that, in case of death, disability or other unforeseen circumstances affecting the Bidder, such Bid Security may be returned. After execution of the Agreement and acceptance of bonds by the City, the Bid Security accompanying the Bid Form of the Successful Bidder will be returned.

ARTICLE 8 PERFORMANCE, PAYMENT AND OTHER BONDS

8.1 Performance, Payment and other required bonds and project Insurance Certificates shall be provided in accordance with Article 5 of the General Conditions of the Contract.

8.2 All Bonds required, as Contract Security shall be furnished prior to the execution of the Agreement.

ARTICLE 9 BID FORMS

9.1 Each Bid shall be submitted on the Bid Form included in this Project Manual. All blank spaces for Bid prices must be filled in with unit or lump sum prices for each of the items for which the bid is requested.

9.2 Bid Forms shall be completed in ink or be typewritten. The Bid price of each item on the form shall be stated in words, and figures. Discrepancies between unit prices and their respective total amounts will be resolved in favor of the unit prices. Discrepancies between words and figures will be resolved in favor of words.

Discrepancies between the indicated sum of any column of figures and correct sum thereof shall be resolved in favor of the correct arithmetic sum, based on words.

9.3 Bids by corporations shall be executed in the corporation name, by the Chief Executive Officer (or other corporate officer). The bid must be accompanied by evidence of authority to sign the bid and the corporate seal shall be affixed and attested to by the secretary. The corporate address and state of incorporation shall be shown below the signature.

9.4 Bids by partnership shall be executed in the partnership name and signed by a partner, whose title shall appear under the signature. The official address of the partnership shall be shown below the signature.

9.5 All names shall be typed or printed below the signature.

9.6 The Bid shall confirm the receipt of all Addenda. Actual number of Addenda received shall be filled in on the Bid Form.

9.7 The address, telephone number and email address of the person to whom communications regarding the Bid are to be directed shall be shown.

9.8 Bids shall be submitted (original signatures) in a sealed envelope bearing on the outside the Bidder's name, address, Project Title, Bid opening date and time, for which the Bid is submitted. If forwarded by mail, the Bid shall be enclosed in a sealed envelope with the notation **"BID ENCLOSED"** on the face and address as above.

ARTICLE 10 RECEIPT OF BIDS

10.1 Sealed bids for the work under this Contract will be received at the time and place indicated in the Invitation to Bid.

10.2 The City may consider informal any Bid not prepared and submitted in accordance with the provisions hereof.

10.3 Bidders are cautioned that it is the responsibility of each individual Bidder to insure that the bid is in the possession of the responsible official or a designated alternate prior to the stated time and at the place of the Bid Opening. The City is not responsible for bids delayed by mail and/or other forms of delivery.

ARTICLE 11 MODIFICATIONS AND WITHDRAWAL OF BIDS

11.1 Bids may be modified only by an appropriate document duly executed and delivered to the place where Bids are to be submitted at any time prior to the opening of Bids.

11.2 Bids may be withdrawn prior to the scheduled Bid Opening time or the authorized postponement thereof.

11.3 Bids, once officially opened, cannot be withdrawn and shall remain open for a period of sixty (60) calendar days from the date of the opening. The City, at its sole discretion, may release any bid and return the Bid Security prior to that date.

ARTICLE 12 AWARD OF CONTRACT

12.1 The Contract will be awarded to the lowest responsible and eligible bidder (Successful Bidder). Such a Bidder shall possess the skill, ability, job-related prior work experience, and integrity necessary for the faithful performance of the work and the bid, apart form being complete and responsive, is the lowest in price of all the bids opened.

12.2 The City reserves the right to reject any and all Bids, to waive any and all informalities, if it is in the City's best interest to do so, and the right to disregard all nonconforming, non-responsive, unbalanced and conditional Bids.

12.3 The City also reserves the right to reject the Bid of any Bidder who is considered to be unqualified in accordance with Article 2, above.

12.4 If the Contract is to be awarded, the City will give the Successful Bidder a Notice of Award within sixty (60) calendar days after the actual Bid Opening Date. The Notice of Award will have to be formally acknowledged and accepted by the Bidder within the time period stipulated herein.

12.5 The acceptance of the above Notice of Award shall be accompanied by a complete list of sub-contractors (specialty, suppliers, and sub-consultants, etc.) selected by the Bidder to work on the project. The list shall contain information on the percentage of total work (material, labor, equipment and services) allocated to each sub-contractor.

ARTICLE 13 EXECUTION OF AGREEMENT

13.1 When the City gives a Notice of Award to the Successful Bidder, at least six (6)-unsigned copies of the Agreement and all other applicable Contract Documents will accompany it. Within ten (10) calendar days from the date of such notification, Contractor shall execute and return all copies of the Agreement and all other applicable Contract Documents to the City. Within ten- (10) calendar days thereafter, the City will deliver one fully signed copy along with the "Notice to Proceed" to the Contractor.

13.2 If for any reason the Notice to Proceed cannot be issued within such period, the time may be extended by mutual agreement between the City and the Contractor. If the Notice to Proceed has not been issued within the ten (10) calendar days after signing of the Agreement, or within the time period mutually agreed upon, the Contractor may terminate the Agreement without further liability on the part of either party.

13.3 The Bidder's attention is especially directed to special requirements in relation to project construction work and completion schedule, specified in Sections 01010, 01045, 01050, 01055, and 01170, in this Project Manual. Each Bidder is urged to study these requirements to insure compliance with the same before submitting the Bid.

ARTICLE 14 SAFETY AND HEALTH REGULATIONS

14.1 This Project is subject to all of the Safety and Health Regulations (CFR 29, Part 1926 and all subsequent amendments) as promulgated by the U.S. Department of Labor on June 24, 1974, and CFR 29, Part 1910, General Industry Safety and Health Regulations Identified as Applicable to Construction.

14.2 The Successful Bidder shall comply with the Department of Labor Safety and Health Regulations for Construction promulgated under the Occupational Safety and Health Act of 1970 (PL-91-596) and under Section 107 of the Contract Work Hours and Safety Standards Act (PL-91-54).

14.3 The Successful Bidder shall have a competent person or persons, as required under the Occupational Safety and Health Act on the site to inspect the Work and to supervise the conformance of the Work with the regulations of the Act.

14.4 This project is also subject to the Massachusetts Department of Labor and Industries Division of Industrial Safety "Rules and Regulations for the Prevention of Accidents in Construction Operations (Industrial Bulletin No. 12)".

ARTICLE 15 SALES TAX

15.1 The materials and supplies to be used in the Work shall be exempt from all applicable Federal, State and local sales taxes.

ARTICLE 16 UTILITY UNDERGROUND PLANT DAMAGE PREVENTION SYSTEM

16.1 All excavations within public or private ways are subject to the requirements of Massachusetts General Laws, Acts of 1983, Chapter 252, included in Part II of the Supplementary Conditions.

ARTICLE 17 WAGE RATES

17.1 All work done under this Contract shall be subject to compliance with the minimum wage rates as mandated by the Commonwealth of Massachusetts Department of Labor and Industries and the U.S. Department of Labor Wage Rates issued in the most recent wage decisions applicable to the project area.

17.2 The Commonwealth of Massachusetts Minimum Wage Rates issued under the provisions of the Massachusetts General Laws, Chapter 149, Section 26 to 27H, as amended, shall apply to the projects when the use of Federal funds is not involved on a particular project.

17.3 The Schedule of Minimum Wage Rates is included in the Appendices and shall be strictly enforced.

17.4 It is the responsibility of the Contractor, before submitting the Bid, to verify the minimum wage rates and to request, if necessary, any additional and/or the latest information on wage rates for all tradespeople to be employed under this contract.

ARTICLE 18 COMPETITIVE BIDDING

18.1 The Bidding and award of this contract shall be in full compliance with the Federal Procurement Act and with MGL Chapter 30, Section 39M, as last revised.

ARTICLE 19 GUARANTEES

19.1 In addition to other guarantees due the City, the Contractor guarantees that the Work and services to be performed under the Contract, and all workmanship, materials, and equipment furnished, used or installed shall be free from defects and flaws, and shall be in strict accordance with the Drawings, Specifications, and other Contract Documents. Also, the strength of all parts of all manufactured equipment shall be adequate and as specified and that the performance test requirements of the Contract shall be fulfilled. This guarantee shall be for a period of one year from and after the date of Substantial Completion and acceptance of the Work unless otherwise specified herein.

The Performance Bond shall remain in full force and effect throughout the Guarantee Period.

19.2 If at any time within the said period of guarantee, any part of the Work requires repairs, correction and/or replacement, the City may notify the Contractor in writing to make the required repairs, correction or replacement. If the Contractor neglects to commence making such repairs, corrections, or replacements to the satisfaction of the City within ten (10) days from the date of receipt of such notice, or having commenced said repairs, corrections or replacement, fails to prosecute such work with diligence, the

City may employ other person(s) to make the same, and all direct and indirect costs of making said repairs, corrections or replacements, including compensation for additional professional services, shall be paid by the Contractor.

ARTICLE 20 LABOR DISPUTES

20.1 The Bidder shall submit a written statement as to whether it has been the subject of, or otherwise been involved in any labor dispute during the past five (5) years. If the bidder has been the subject of, or otherwise been involved in any labor dispute during this period, the Bidder must also provide a detailed description of each labor dispute, including the name and location of the project worked on, the nature of the dispute, the duration and dates during which the dispute took place and how the dispute was resolved. For these purposes, "labor disputes" shall include picketing or any other activity which disrupted or delayed the Work.

ARTICLE 21 RECORD KEEPING

21.1 The Contractor is reminded that the provisions of Chapter 30, Section 39R relative to record keeping apply to this Contract. A copy of c.30, s.39R is included in the Supplementary Conditions. A brief summary of the requirements is as follows:

a. The Contractor and all sub-contractors shall maintain books, records and accounts at least six (6) years after the final payment. They will be subject to inspection by the awarding authority, officers of the Inspector General, or the Department of Capital Asset Management.

b. Any changes in record keeping or recording transactions, which affect the awarding authority, shall be explained along with a letter from the Contractor's independent certified public accountant approving or otherwise commenting on the change.

c. The Contractor shall file with the awarding authority a statement of management as to whether the system of internal accounting controls has been established.

d. The Contractor shall file with the awarding authority a statement prepared and signed by an independent certified public account that an examination has been made of internal accounting controls.

ARTICLE 22 LAWS AND REGULATIONS

22.1 All applicable laws, ordinances and rules and regulations of all Public Agencies having jurisdiction over construction of the project shall apply to the Contract throughout.

22.2 This project is subject to all of the OSHA Safety and Health Regulations (see

CFR Part 1926/1910 and all subsequent amendments), as promulgated by the United States Department of Labor on June 24, 1974 and MGL Chapter 454 CMR 10.00, et.seq.; The Prevention of Accidents and Illnesses in Construction Operations. Contractors shall become familiar with the requirements of these regulations.

Kathryn R. Hobin
Purchasing Agent

BID FORM

PROPOSAL OF:

(hereinafter called "Bidder", organized and existing under the laws of the Commonwealth of Massachusetts, doing business as:

- a corporation
- a partnership
- an individual.

TO: The Commissioner of Public Works for the City of Quincy, Massachusetts (hereinafter called the City)

In compliance with your Advertisements for Bids, Bidder hereby proposes to perform all work for the **ADAMS STREET -ROADS IMPROVEMENTS-SUMMER 2013** within ten (10) calendar days following the effective date of the Contract Agreement and fully complete the project within Sixty (**60**) calendar days thereafter. Work performed after this Contract Time Period (Completion) will be subject to liquidated damages. The Bidder further agrees to pay as liquidated damages: $1000.00 for each day thereafter, charged against the Contractor, as provided for in Article 12 of the General Conditions.

Bidder agrees not to withdraw his bid for sixty (60) calendar days after the actual bid opening date and that if the City shall accept this bid, the Bidder will duly execute and acknowledge the Agreement and furnish duly executed and acknowledged, the required Contract Bonds, Insurance Certificates and other documents, within ten (10) calendar days, after the notification that the Agreement and other documents are ready for signature.

Bidder acknowledges receipt of Addenda No. ____ through No.____.

The attached price is to include and cover the furnishing of all materials (except as herein otherwise specified), all labor (requisite or proper), tools, equipment, apparatus and other means of construction, required in the performance of the works included herein, in the manner set forth and shown in the Specifications for the Work and in the form of Contract, and the **completion** thereof as specified herein. Bidder agrees to perform all the work described in the Contract Documents at the following unit price(s)/lump sum(s) for a total amount of $_____.
All prices, except at the extended totals, shall be stated in both words and figures. In the event of a discrepancy between the price in words and the price in figures, the written word shall govern. In the event of a discrepancy between mathematical totals and the totals stated, the mathematical totals shall govern. All prices shall be typewritten or written by hand (printed) in black ink.

BID FORM

The Bidder agrees to perform all the Work described in the Contract Documents for the following unit prices or lump sum(s):

Item No.	Estimated Quantity	Brief Description of Items w/ Unit Bid Price in Words	Unit Bid Price in Figures	Amount in Figures
102.090	10	TREE STUMP REMOVAL		
		_____ each	$_____	$_____
102.190	24	TREE ROOT SYSTEM, CUT BACK & REMOVE		
		_____ each	$_____	$_____
120.100	1975	UNCLASSIFIED EXCAVATION		
		_____ per cubic yard	$_____	$_____
129.000	25000	BITUMINOUS CONCRETE EXCAVATION BY COLD PLANER		
		_____ per square yard	$_____	$_____
151.220	987	GRAVEL BORROW FOR SIDEWALKS		
		_____ per cubic yard	$_____	$_____
170.000	8889	FINE GRADING & COMPACTION		
		_____ per square yard	$_____	$_____
220.000	42	DRAINAGE STRUCTURE, ADJUST		
		_____ each	$_____	$_____
220.500	62	DRAINAGE STRUCTURE, REMODEL		
		_____ each	$_____	$_____

SUB-TOTAL PAGE 00410-2: $_____

Item No.	Estimated Quantity	Brief Description of Items w/ Unit Bid Price in Words	Unit Bid Price in Figures	Amount in Figures
220.700	20	SANITARY STRUCTURE, ADJUST		
		_____ each	$_____	$_____
220.800	21	SANITARY STRUCTURE, REMODEL		
		_____ each	$_____	$_____
222.000	30	REPLACEMENT FRAME AND GRATE/COVER		
		_____ each	$_____	$_____
358.000	200	GATEBOX, ADJUST		
		_____ each	$_____	$_____
381.000	40	SERVICE BOX		
		_____ each	$_____	$_____
405.000	50	GRAVEL FOR BASE COURSE		
		_____ cubic yard	$_____	$_____
420.000	50	CLASS 1 BITUMINOUS CONCRETE BASE COURSE		
		_____ ton	$_____	$_____
460.000	3300	CLASS 1 BITUMINOUS CONCRETE TOP COURSE		
		_____ ton	$_____	$_____
460.500	1500	CLASS 1 BITUMINOUS CONCRETE LEVELING COURSE		
		_____ ton	$_____	$_____

SUB-TOTAL PAGE 00410-3: $_____

Item No.	Estimated Quantity	Brief Description of Items w/ Unit Bid Price in Words	Unit Bid Price in Figures	Amount in Figures
463.000	5000	BITUMINOUS FOR TACK/PRIME COAT		
		_____ per gallon	$_____	$_____
472.000	300	HOT MIX ASPHALT FOR MISC. WORK		
		_____ per ton	$_____	$_____
473.000	100	FLEXIBLE POROUS PAVEMENT		
		_____ per ton	$_____	$_____
503.000	400	GRANITE CURB - TYPE VA-3 STRAIGHT		
		_____ per linear foot	$_____	$_____
503.100	500	GRANITE CURB – TYPE VA-3 CURVED		
		_____ per linear foot	$_____	$_____
517.000	30	GRANITE CURB CORNER		
		_____ each	$_____	$_____
580.000	7000	CURB REMOVE & RESET		
		_____ per linear foot	$_____	$_____
583.000	100	CURB CORNER REMOVE & RESET		
		_____ each	$_____	$_____
701.000	5955	CEMENT CONCRETE FOR WALKS		
		_____ per square yard	$_____	$_____

SUB-TOTAL PAGE 00410-4: $_____

Item No.	Estimated Quantity	Brief Description of Items w/ Unit Bid Price in Words	Unit Bid Price in Figures	Amount in Figures
701.100	2933	CEMENT CONCRETE FOR DRIVES		
		_____ per square yard	$_____	$_____
701.310	1100	CEMENT CONCRETE FOR WCR'S w/det. Warn panel		
		_____ per square yard	$_____	$_____
702.100	450	BITUMINOUS CONCRETE SIDEWALKS		
		_____ per ton	$_____	$_____
748.000	1	MOBILIZATION/DEMOBILIZATION @ 5%		
		_____ lump sum		$_____
751.000	700	LOAM BORROW		
		_____ per cubic yard	$_____	$_____
765.000	4200	SEEDING		
		_____ per square yard	$_____	$_____
775.000	24	PRINCETON ELM TREE 2.5-3" CALIPER		
		_____ each	$_____	$_____
776.000	24	JAPANESE TREE LILAC 2.5-3" CALIPER		
		_____ each	$_____	$_____
804.300	415	3-INCH ELECTRICAL CONDUIT, TYPE NM-PLASTIC (UL)		
		_____ feet	$_____	$_____

SUB-TOTAL PAGE 00410-5: $_____

Item No.	Estimated Quantity	Brief Description of Items w/ Unit Bid Price in Words	Unit Bid Price in Figures	Amount in Figures
811.310	8	12 IN X 12 IN PULLBOX (SD2.031)		
		_____ each	$_____	$_____
815.010	1	BEALE/ADAMS ST TRAFFIC IMPROVEMENT PER PLAN		
		_____ lump sum	$_____	$_____
866.040	12000	4-INCH WHITE LINE REFLECTORIZED (THERMOPLASTIC)		
		_____ per linear foot	$_____	$_____
866.120	2000	12-INCH WHITE LINE REFLECTORIZED (THERMOPLASTIC)		
		_____ per linear foot	$_____	$_____
867.040	9000	4-INCH YELLOW LINE REFLECTORIZED (THERMOPLASTIC)		
		_____ per linear foot	$_____	$_____
904.000	20	CONCRETE		
		_____ per cubic yard	$_____	$_____
999.001	3500	TRAFFIC POLICE DETAILS		
		Forty Two and No Cents per hour	$ 42.00	$ 147,000.00

SUB-TOTAL PAGE 00410-6: $_____

BID FORM (continued)

SUB-TOTAL PAGE 00410-2:	$_____
SUB-TOTAL PAGE 00410-3:	$_____
SUB-TOTAL PAGE 00410-4:	$_____
SUB-TOTAL PAGE 00410-5:	$_____
SUB-TOTAL PAGE 00410-6:	$_____
TOTAL BID AMOUNT:	**$**_____ *(In Figures)*

_____

(Total Bid Amount Written In Words)

BID FORM

The Bidder hereby certifies that he is able to furnish labor that can work in harmony with all other elements of labor employed or to be employed on the work and that he will comply fully with all laws and regulations applicable to awards made in the Commonwealth of Massachusetts.

The Bidder certifies under the penalties of perjury that this bid is in all respects bona fide, fair and made without collusion or fraud with any other person. As used herein, the word "person" shall mean any natural person, joint venture, partnership, corporation, or other business or legal entity.

Interest of Officers and Employees of the City of Quincy or Members of the City Council or Other Public Officials: No officer, member or employee of the City of Quincy or its designees or agents, and no member of its governing body, and no other public official of the governing body of the locality or localities in which the project is situated or being carried out, who exercises any functions or responsibilities in the review or approval or the undertaking or carrying out of this project, shall participate in any decisions relating to this Contract, which affects his personal interest or the interest of any corporation, partnership, or association in which he is directly or indirectly interested or have any personal or pecuniary interest, direct or indirect, in this contract or the proceeds thereof.

The undersigned, as Bidder, declares that he has carefully examined the proposed form and has fully informed and satisfied himself as to the existing conditions, the character and requirements of the proposed work, the difficulties attendant upon its execution; and the accuracy of all estimated quantities stated in this bid and that he has carefully read and examined the form of contract, the standard specifications and plans therein referred to, and he proposes and agrees, if this proposal is accepted, that he will contract with the Party of the First Part to provide all necessary labor, equipment, tools, apparatus and other means of construction and to do all the work and furnish all the materials specified in the contract in the manner and time therein prescribed and according to the requirements of the City of Quincy as therein set forth and that he will take the payment therefore, the prices stated in the Bid.

The undersigned, as Bidder, declares that he understands that information relative to sub-surface and other conditions, natural phenomena, existing pipes and other structures (surface and/or sub-surface) has been furnished only for his information and convenience without any warranty or guarantee, expressed or implied, that the structures (surface and/or sub-surface) actually encountered will be the same as those shown on the drawings or in any of the other contract documents, and he agrees that he shall not use or be entitled to use any such information made available to him through the contract documents or otherwise, or obtained by him in his own examination or the site, as a basis or grounds for any claim against the City of the Engineer arising from or by reason or any variance which may exist between the aforesaid information made available to or acquired by him and the sub-surface and/or other conditions, natural phenomena, existing pipes and other structures (surface and/or sub-surface) encountered during construction, and that due allowance therefore has been made in this bid.

The undersigned, as Bidder, understands that the quantities of work tabulated in this bid or indicated on the drawings or in the specifications or other contract documents are only approximate and are subject to increase or decrease, as deemed necessary by the Engineer.

The undersigned, as Bidder, agrees that for extra work, if any, performed in accordance with the terms and provisions of the annexed form of Agreement, he will accept compensation as stipulated therein as full payment for such extra work.

If this proposal shall be accepted and the Bidder shall fail to contract as aforesaid and to give a Bond in the sum to be determined as aforesaid with surety satisfactory to the City of Quincy within ten (10) days from the date of the mailing of the Notice of Award from the City of Quincy to him, according to the address herewith given, the City of Quincy may, at its option, determine that the bidder has abandoned the contract, and thereupon this proposal and acceptance thereof shall be null and void, and the certified check or bid submitted covering this proposal shall become the property of the City of Quincy, otherwise said certified check or bid bond shall be returned to the Bidder.

This bid must bear the written signature of the Bidder, or an authorized agent of the bidder. If the bidder is a corporation or a partnership, the bid must be signed by a duly authorized officer of such corporation or partnership, and the title of such an officer must be stated.

The Bidder offers the following information as evidence or qualifications to perform the work as bid in accordance with the requirements of the plans and specifications.

BID FORM

RELEVANT PREVIOUS EXPERIENCE

The Bidder shall list below the relevant prior work experience on similar projects, and give references that will enable the City to evaluate his qualifications to perform the work under this Contract. The length of the relevant experience must be at least 5 years on projects of comparable size and complexity. The evaluation shall be based on prior experience, work performance and level of key personnel skills, and business standing (add additional page if necessary).

I. PROJECTS

	Completion Date	Project Name	Contract Amount	Design Reference Engineer Name	Reference Phone No.
a.					
b.					
c.					
d.					
e.					
f.					

II. KEY PERSONNEL:

Key personnel to be employed on the job, in the event of contract award. Attach brief education and experience where applicable.

1. _____

2. _____

3. _____

4. _____

BID FORM

STATEMENT OF BIDDER'S QUALIFICATIONS

All questions must be answered and the date given must be clear and comprehensive. This statement must be notarized. If necessary, questions may be answered on separate attached sheet. The bidder may submit any additional information, if desired.

1. Name of Bidder: _____

2. Permanent main office address: _____

   a. Treasury Number (Employer's Identification No.): _____

3. When organized? _____

4. If a corporation, where incorporated? _____

5. How many years have you been engaged in the contracting business under your present firm or trade name? _____

   a. Names and home addresses of principal officers and their social security numbers: (attach separate sheet).

6. Contracts on hand: (Schedule these, showing gross amount of each contract and the approximate anticipated dates of completion. Name and address of client and name of person supervising for client.) (Attach separate sheet)

7. General character of work performed by your company? _____

8. Have you ever failed to complete any work awarded to your? If so, where and why?

   _____

9. Have you ever defaulted on a contract? If so, where and why?

   _____

10. List the more important contracts recently completed by you stating approximate cost of each, and the month and year completed. (Give names and addresses of client and name of person supervising for client). (See attached form.)

11. List your major equipment available for this contract. (Use separate sheet)

12. Experience in construction work similar in importance to this project. (See form)

13. Background and experience of the principle members of your organization, including the officers.

14. Credit available: $_____.

15. Give bank reference, including bank name, address, telephone and contact name.

16. Will you, upon request, fill out a detailed financial statement and furnish any other information that may be required?

17. The undersigned hereby authorizes and requests any person, firm, or corporation to furnish any information requested by the City of Quincy in verification of the recitals comprising this Statement of Bidder's Qualifications.

Dated this _____ day of _____, 20___.

Name of Bidder: _____

By:_____

Title:_____

State of _____

County of _____

_____ being duly sworn, deposed and says that he is

_____ of _____
(office) (Name of Organization)

and that the answers to the foregoing questions and all statements contained therein are true and correct.

SUBSCRIBED AND SWORN TO, before me the _____ day of _____ , 20_____

_____
(Notary Public) Seal

My commission expires:_____

CITY OF QUINCY
Purchasing Department
1305 Hancock Street, Quincy, MA 02169

Phone: (617) 376-1060
Fax: (617) 376-1074

SIGNATURE AUTHORIZATION

At a duly authorized meeting of the Board of Directors of the

_____
(NAME OF CORPORATION)

held on _____, at which all the Directors were present or waived notice, it was
(DATE)

VOTED, that:

_____ _____
(NAME) (OFFICER)

of this company, be and he/she hereby is authorized to execute Contracts and Bonds in the name and behalf of said Company, and affix its Corporate Seal thereto, and such execution of any Contract or obligation in this Company's name on its behalf by such _____ under seal of the Company, shall be valid
(OFFICER)

and binding upon this Company. It was further voted that the City of Quincy may rely on such authorization of future Contracts until notified to the contrary.

A true copy,

ATTEST: _____
(CLERK'S SIGNATURE)

PLACE OF BUSINESS: _____

DATE OF THIS CONTRACT: _____

I hereby certify that I am the Clerk of the:

_____ that _____ is the
(COMPANY) (NAME)

duly elected _____ of said Company, and that the above VOTE has not been
(TITLE)

amended or rescinded and remains in full force and effect as of the date of this Contract.

_____ **CORPORATE SEAL**

SIGNATURE PAGE

DATED: _____

BY: _____
(Signature and Title of Person Authorized to Sign Bid)

_____
(Name of General Bidder)

_____
(Business Address)

_____
(Social Security Number – Federal Tax ID No.)

Telephone Number: (_____) _____

Email: _____

(SEAL: IF BID IS BY A CORPORATION)

ATTEST: _____

The proposed surety company on the bond to be given as follows:

_____
(Contact Name)

_____
(Name of Surety)

_____
(Address of Home Office)

_____
(Massachusetts Address, if different)

_____
(Business Telephone)

CITY OF QUINCY
Purchasing Department
1305 Hancock Street, Quincy, MA 02169

Phone: 376-1060
Fax: 376-1074

TAX COMPLIANCE CERTIFICATE
MASS. GENERAL LAWS, CH. 62c, s: 49A(b)

I hereby certify that I have complied with all laws of the Commonwealth of Massachusetts relating to taxes, reporting of employees and contractors, and withholding of child support.

Signed under the pains and penalties of perjury.

(1) Individual Contractor _____
Contractor's Name and Signature)

(2) Corporation, Association or Partnership _____
(Contractor's Name)

Federal Tax ID Number, or Social Security Number _____

By: _____
(Authorized Signature)

Note to Contractor: Please sign at (1) or (2), whichever applies.

CHAPTER 62C. ADMINISTRATIVE PROVISIONS RELATIVE TO STATE TAXATION

Chapter 62C: Section 49A Certification of compliance with tax laws as prerequisite to obtaining license or governmental contract

Section 49A. (a) Any person applying to any department, board, commission, division, authority, district or other agency of the commonwealth or any subdivision of the commonwealth, including a city, town or district, for a right or license to conduct a profession, trade or business, or for the renewal of such right or license, shall certify upon such application, under penalties of perjury, that he has complied with all laws of the commonwealth relating to taxes, reporting of employees and contractors, and withholding and remitting child support. Such right or license shall not be issued or renewed unless such certification is made.

(b) No contract or other agreement for the purposes of providing goods, services or real estate space to any of the foregoing agencies shall be entered into, renewed or extended with any person unless such person certifies in writing, under penalties of perjury, that he had complied with all laws of the commonwealth relating to taxes, reporting of employees and contractors, and withholding and remitting child support.

(c) Any such agency, which has been notified by the commissioner pursuant to section forty-seven A that a person who holds a license or certificate of authority issued by such agency or who has agreed to furnish goods, services or real estate space to such agency has neglected or refused to file any returns or to pay any tax required under this chapter and that such person has not filed in good faith a pending application for abatement of such tax or a pending petition before the appellate tax board contesting such tax or has been penalized pursuant to section 9 of chapter 62E for failure to comply with the provisions under said chapter 62E relating to reporting of employees and contractors, or has been penalized pursuant to paragraph (3) of subsection (f) of section 12 of chapter 119A for failure to comply with the provisions under said chapter 119A relating to withholding and remitting child support, shall refuse to reissue, renew or extend such license, certificate of authority, contract or agreement until the agency receives a certificate issued by the commissioner that the person is in good standing with respect to any and all returns due and taxes payable to the commissioner as of the date of issuance of said certificate, including all returns and taxes referenced in the initial notification or, if the licensee has been penalized for failure to comply with the provisions relating to reporting of employees and contractors under chapter 62E or withholding and remitting child support under chapter 119A, a certificate issued by the commissioner that the licensee is in compliance with said provisions.

(d) Any person who owns or leases a motor vehicle or trailer that is required to be registered in the commonwealth under chapter 90 and improperly registers the motor vehicle or trailer in another state or misrepresents the place of garaging of the motor vehicle or trailer in another city or town, shall be considered in violation of laws of the commonwealth relating to taxes under chapter 60A, chapter 64H or chapter 64I. The right, license or contract provided for in subsections (a) and (b) shall not be issued or renewed until the person or business entity has paid all taxes due at the time of application for such right, license or contract.

(e) Any person who, for the purpose of evading payment of a tax pursuant to chapters 59 to 64J, inclusive, willfully makes and subscribes any return, form, statement or other document pursuant to subsection (a), (b) or (d) that contains or is verified by a written declaration that is made under the penalties of perjury, and that contains information that he does not believe to be true and correct as to every matter material to his compliance with all laws of the commonwealth relating to taxes, shall be subject to section 73.

This form may be substituted with standardized form issued by insurance/bonding agent.

BID BOND

KNOW ALL MEN BY THESE PRESENT, that we, the undersigned,

_____ as Principal and

_____ as Surety, are hereby held and firmly bound unto

_____ as OWNER in the penal sum of

for the payment of which, well and truly to be made, we hereby jointly and severally bind ourselves,

successors and assigns _____ .

Signed this _____ day of _____ , 20

The Condition of the above obligation is such that whereas the Principal has submitted to:

_____ a certain BID, attached hereto and hereby made a part hereof

to enter into a contract in writing for the:

_____

NOW, THEREFORE,

(A) If said BID shall be rejected, or

(B) If said BID shall be accepted and the Principal shall execute and deliver a contract int he Form of Contract attached hereto (properly completed in accordance with said BID) and shall furnish a BOND for his faithful performance of said contract, and for the payment of all persons performing labor, or furnishing materials in connection therewith, and shall in all other respects perform the agreement created by the acceptance of said BID,

then this obligation shall be void, otherwise the same shall remain in force and effect; it being expressly understood and agreed that the liability of the Surety for any and all claims hereunder shall, in no event, exceed the penal amount of this obligation as herein stated.

This form may be substituted with standardized form issued by insurance/bonding agent.

The Surety, for value received, hereby stipulates and agrees that the obligations of said Surety and its BOND shall in no way be impaired or affected by any extension of the time within which the OWNER may accept such BID, and said Surety does hereby waive notice of any such extension.

IN WITNESS WHEREOF, the Principal and the Surety have hereunto set their hands and seals, and such of them as are corporations have caused their corporate seals to be hereto affixed and these present to be signed by their proper officers the day and year first set forth above.

_____ (L.S.)
Principal

_____
Surety

BY:_____

IMPORTANT: Surety companies executing BONDS must appear on the Treasury Department's most current list (Cir. 570, as amended) and be authorized to transact business in the state where the project is located.

RIGHT-TO-KNOW LAW

A bidder will not be eligible for award of this contract under this invitation for bids unless such bidder has submitted as part of its bid the following certification which will be deemed a part of the resulting contract.

CERTIFICATION

The Bidder hereby certifies that, if awarded this contract, he will fully comply with the Massachusetts Right-To-Know Law, c.470 of the Acts of 1983, (the Act). In addition, he shall:

1. obtain a Material Safety Data Sheet (MSDS), for all substances or mixtures of which appear on the Massachusetts Substance List that he or any of his subcontractors brings to or uses on the work site and will keep a copy of the MSDS on the work site of this contract;

2. label each container of a substance or mixture of substances on the Massachusetts Substance List, as required, in section 7 of the Act;

3. provide the same training and non-technical instruction that he is required to provide under section 15 of the Act to all Quincy personnel. Training shall include instructing on the nature and effects of any substance or mixture of substances listed on the Massachusetts Substance List which the Bidder or any of his subcontractors brings to or uses on the worksite.

4. provide to Quincy DPW employees on the work site the same protective equipment that the bidder or any of his subcontractors provides to his employees.

_____
Signature of Authorized Representative of Bidder

Bidder's Name: _____

Bidder's Address: _____

_____

NON-COLLUSION AFFIDAVIT

A bidder will not be eligible for award of this contract under this invitation for bids unless such bidder has submitted as part of its bid the following certification which will be deemed a part of the resulting contract.

State of _____

Date: _____ 20_____

County of _____

The undersigned being duly sworn, deposes and says that he is the:

_____

(sole owner, partner, president, treasurer, or other duly authorized official)

of _____

(name of company - bidder - as appears in submitted proposal)

for work in _____ on _____

(City/Town) (Bid Opening Date)

and certifies under penalties of perjury that this bid is in all respects bona fide, fair and made without collusion or fraud with any other person. As used in this paragraph the word "person" shall mean any natural person, joint venture, partnership, corporation or other business or legal entity.

_____

Signature/Title of Person Making Affidavit

Sworn to before me this:

_____ day of _____ 20_____

_____

(Notary Public)

My commission expires: _____ 20_____

CERTIFICATION
NON-SEGREGATED FACILITIES

The Bidder certifies that he does not maintain or provide for his employees any segregated facilities at any of his establishments, and that he does not permit his employees to perform their services at any location, under this control, where segregated facilities are maintained. The Bidder certifies further that he will not maintain or provide for his employees any segregated facilities at any of his establishments and that he will not permit his employees to perform their services at any location under his control where segregated facilities are maintained. The Bidder agrees that a breach of this certification will be a violation of the Equal Opportunity clause in any contract resulting from acceptance of this bid. As used in this certification, the term "segregated facilities" means any waiting rooms, work areas, restrooms, and washrooms, restaurants and other eating areas, timeclocks, locker rooms, and other storage or dressing areas, parking lots, drinking fountains, recreation or entertainment areas, transportation and housing facilities provided for employees which are segregated by explicit directive or are in fact segregated on the basis of race, color, religion or national origin, because of habit, local custom or otherwise. The Bidder agrees that (except where he has obtained identical certification from proposed subcontractors for specific time periods) he will obtain identical certifications from proposed subcontractors prior to the award of subcontracts exceeding $10,000.00 which are not exempt from the provisions of the Equal Opportunity clause, and that he will retain such certifications in his file.

Note: The penalty for making false statements in offers is prescribed in 18 U.S.C. ss.1001.

Date:_____, 20____

_____
(Name of Bidder)

Official Address (including Zip Code)

By:

_____

_____
(Title)

_____

AFFIDAVIT
REGARDING PRIOR LABOR DISPUTES

The Bidder must execute and complete the following statements as to whether it has been the subject of, or otherwise been involved in, any labor dispute during the past five (5) years. If the Bidder has been the subject of, or otherwise been involved in any labor dispute during this period, the bidder must also provide a detailed description of each labor dispute, including the name and location of the project worked on, the nature of the dispute was resolved. For these purposes, "labor disputes" shall include picketing or any other activity which disrupted or delayed the work.

I _____ , being first duly sworn, do hereby depose/state:
(Name)

1. I make each of the following statements with full authorization to bind

   _____ to each of the representations made below.
   (Name of Bidder)

2. _____ has/has not been involved in a labor dispute
   (Name of Bidder)

   as described above, within the past five (5) years.

3. (Complete only if bidder has been involved in dispute).

   The dispute(s) occurred on the following project(s). (Use separate sheet if necessary)

Name and Location of Project	Date Dispute Began	Date Concluded
a.		
b.		

Attach separate sheet and give full description of the nature of each dispute and an explanation of how it was resolved. (Please give a full description below, for each such dispute).

Signed under the penalty of perjury this _____ day of _____ , 20____ .

BY: _____

on behalf of: _____
(Company name)

(To be typed onto letterhead of the Certified Public Accountant)

City of Quincy
City Solicitor's Office
1305 Hancock Street
Quincy, MA 02169

Attn: James S. Timmins
City Solicitor

RE: _____
Project Name

Dear Mr.Timmins:

Please be advised that I have reviewed the statement on internal accounting controls prepared by/for _____ (Name of Company), in connection with the above captioned project. This statement is required under Massachusetts General Laws, Chapter 30, Section 39R. In our opinion, representations of management are consistent with our evaluation of the system of internal accounting controls. In addition, we believe that they are reasonable with respect to transactions and assets in amounts which would be material when measured in relation to the firm's financial statements.

Yours sincerely,

_____
Certified Public Accountant

Note: This form is to be completed only when the contract exceeds $100,000. and is for the purchase of materials or for the construction, renovation, etc. of public works or public buildings.

CERTIFICATION

Internal Accounting

The Contractor certifies that it has internal accounting controls, as required by Chapter 30, Section 39R and that the Contractor will:

1. maintain accurate and detailed accounts for a six (6) year period after the final payment;

2. file regular statements of management concerning internal auditing controls;

3. file an annual audited financial statement; and

4. submit a statement from an independent certified public accountant that such CPA has examined management's internal auditing controls and expresses an opinion as to their consistency with management's statements in (2) above, and whether such statements are reasonable with respect to transactions and assets that are substantial in relation to designer's financial statements. General Laws, Chapter 7, Section 301 (e).

Signed under the pains and penalties of perjury:

_____

Name of Company

_____

Authorized Signature

Note: This form is to be completed only when the contract exceeds $100,000 and is for the purchase of materials or for the construction, renovation, etc. of public works or public buildings.

CERTIFICATION OF GENERAL BIDDERS ON PUBLIC CONSTRUCTION PROJECTS

I. CERTIFICATION REGARDING HEALTH AND SAFETY

The undersigned hereby certifies that he is able to furnish labor that can work in harmony with all other elements of labor employed or to be employed on the work; that all employees to be employed at the worksite will have successfully completed a course in construction safety and health approved by the United States Occupational Safety and Health Administration that is at least ten hours in duration at the time the employee begins work and who shall furnish documentation of successful completion of said course with the first certified payroll report for each employee; and that he will comply fully with all laws and regulations application to awards made subject to section 44A.

II. CERTIFICATION REGARDING NON-COLLUSION AND DEBARMENT

The undersigned further certifies under the penalties of perjury that this bid is in all respects bona fide, fair and made without collusion or fraud with any other person. As used in this subsection the word "person" shall mean any natural person, joint venture, partnership, corporation or other business or legal entity. The undersigned further certifies under penalty of perjury that the said undersigned is not presently debarred from doing public construction work in the Commonwealth under the provisions of section twenty-nine F of chapter twenty-nine, or any other applicable debarment provisions of any other chapter of the General Laws or any rule or regulation promulgated thereunder.

Date: _____

_____
Name of General Bidder

By _____
Signature

_____
Print name and title

_____
Business Address

_____
Street Address City and State

CERTIFICATION OF SUB- BIDDERS (IF ANY) ON PUBLIC CONSTRUCTION PROJECTS

I. CERTIFICATION REGARDING HEALTH AND SAFETY

The undersigned hereby certifies that he is able to furnish labor that can work in harmony with all other elements of labor employed or to be employed on the work; that all employees to be employed at the worksite will have successfully completed a course in construction safety and health approved by the United States Occupation Safety and Health Administration that is at least ten hours in duration at the time the employee begins work and who shall furnish documentation of successful completion of said course with the first certified payroll report for each employee; and that he will comply fully with all laws and regulations applicable to awards of subcontracts subject to section 44F.

II. CERTIFICATION REGARDING NON-COLLUSION AND DEBARMENT

The undersigned further certifies under penalties of perjury that this subbid is in all responses bona fide, fair and made without collusion or fraud with any other person. As used in this subsection the "person" shall mean any natural person, joint venture, partnership, corporation or other business or legal entity. The undersigned further certifies under penalty of perjury that the said undersigned is not presently debarred from doing public construction work in the Commonwealth under the provisions of section twenty-nine F of chapter twenty-nine, or any other applicable debarment provisions of any other chapter of the General Laws or any rule or regulation promulgated thereunder.

Date _____

_____
Name of Sub-bidder

By _____
Signature

_____
Print Name and Title

_____
Business Name

_____
Street Address, City and State

NOTICE OF AWARD

TO:

PROJECT TITLE: _____

The City has considered the Bid submitted by you for the above-described work in response to its Advertisements for Bids and Information for Bidders. You are hereby notified that your Bid in the amount $ _____ has been accepted, provided you furnish the City with the required Certificates, Affidavits, Contractor's Performance and Payments Bonds and Certificate of Insurance within ten (10) days receipt of this notice to execute the Agreement. In case of failure to execute said Agreement and to furnish said bonds and documents as stipulated in the Bid Documents within ten (10) days from the date of receipt of this Notice, the City will be entitled to consider all your rights arising out of the City's acceptance of your Bid as abandoned and as a forfeiture of your bid bond. The City will also be entitled to such other rights as may be granted by law. You are required to return an acknowledged copy of the Notice of Award to the City.

Dated this the _____ day of_____20___.

BY:_____
DANIEL G. RAYMONDI
Commissioner of Public Works

ACCEPTANCE OF NOTICE

Receipt of the above NOTICE OF AWARD is hereby acknowledged by:

_____
(Company Name)

Signature: _____ Date: _____

Print Name: _____ Title: _____

AGREEMENT-ROAD IMPROVEMENTS 2013

THIS AGREEMENT made as of the _____ day of _____ in the year _____ by and between the City of Quincy, Massachusetts, acting through its Department of Public Works, hereinafter called the "City" and: _____ with legal address and principle place of business at _____ _____ hereinafter called the "Contractor". The City and the Contractor, in consideration of the mutual covenants hereinafter set forth, agree as follows:

ARTICLE 1 WORK

1.1 Contractor shall perform the Work as specified or indicated in the Contract Documents. The Work is as described in Section 01010, Summary of Work.

ARTICLE 2 ENGINEER

2.1 The project design and construction documents have been prepared by the City of Quincy, Engineering Department.

2.2 The City of Quincy Engineer Department, 55 Sea Street, Quincy, Massachusetts will act as the Engineer in connection with execution of the project work, in accordance with the Contract Documents.

ARTICLE 3 CONTRACT TIME

3.1 The total Contract Time to complete the project shall be 60 calendar days, commencing ten (10) calendar days following the effective date of this Agreement. No site work shall be allowed between Thanksgiving and March 15, without permission, in writing, from the City.

3.2 The Contractor agrees that the Work shall be prosecuted regularly, diligently, and uninterrupted and at such rate of progress as will insure full completion thereof within the Contract Time stated above. It is expressly understood and agreed, by and between the contractor and the City, that the Contract Time is reasonable for the completion of the Work, taking into consideration the average climatic range and usual business/commercial and industrial activities prevailing in this locality.

ARTICLE 4 CONTRACT PRICE

4.1 The City will pay the contractor for performance of the Work in accordance with the Contract Documents, in current funds at the itemized unit or lump sum prices of work items, a total agreed sum of $_____ (state the total amount in words):

_____

as submitted in the Contractor's Bid Form attached to the Agreement.

ARTICLE 5 APPLICATIONS FOR PAYMENT

5.1 Applications for payment shall be submitted by the Contractor and processed by the Engineer in accordance with the Conditions of the Contract included in the Contract Documents.

ARTICLE 6 PROGRESS AND FINAL PAYMENTS

6.1 The City will make progress payments on account of the Contract Price on the basis of the Contractor's Application for Payment, as recommended by the Engineer, monthly during construction as provided below. All progress payments will be on the basis of the progress of the Work measured by the schedule of values provided for in the Conditions of the Contract.

6.2 The City will make progress and final payments as provided for in the Conditions of the Contract and in accordance with the applicable Massachusetts General Laws.

ARTICLE 7 LIQUIDATED DAMAGES

7.1 The City and the Contractor recognize that time is of the essence for this Agreement and that the City will suffer financial loss if the Work is not completed within the Contract Time specified in Article 3 above, plus any extensions thereof allowed in accordance with Article 12 of the General Conditions. They also recognize the delays, expense and difficulties involved in providing, in a legal or arbitration proceeding, the actual loss suffered by the City if the Work is not completed on time. Accordingly, instead of requiring any such proof, the City and the Contractor agree that as liquidated damages or delay (but not as a penalty) the Contractor shall pay the City $ 1,000.00 per day for each calendar day of delay until the Work is complete.

7.2 Provided, that the Contractor shall not be charged with liquidated damages or any excess cost when the delay in completion of the Work is for reasons included in Article 12 of the General Conditions.

7.3 Provided further, that the Contractor shall furnish the City the required notification of such delays in accordance with the applicable Conditions of the Contract.

ARTICLE 8 ASSURANCE

8.1 The Contractor has familiarized himself with the nature and extent of the Contract Documents, Work, locality, and with all local conditions and Federal, State and local laws, ordinances, rules and regulations that in any manner may affect cost, progress or performance of the Work.

8.2 The Contractor has studied carefully all reports of investigations and tests of sub-surface and latent physical conditions at the site or otherwise affecting cost, progress or performance of the Work which were relied upon by the Engineer in the preparation of the Drawings and Specifications and which have been identified in the Supplementary Conditions.

8.3 The Contractor has made or caused to be made examinations, investigations and tests and studies of such reports and related data in addition to those referred to in the above paragraph as he deems necessary for the performance of the work at the Contact Price within the Contact Time and in accordance with the other terms and conditions of the Contract Documents; and no additional examinations, investigations, tests, reports or similar data are or will be required by him for such purposes.

8.4 The Contractor has correlated the results of all such observations, examinations, tests, reports and data with the terms and conditions of the Contract Documents.

8.5 The Contractor has given the Engineer written notice of any conflict, error or discrepancy that he has discovered in the Contract Documents and the written resolution thereof by the Engineer is acceptable to the Contractor.

8.6 The Contractor agrees that the Contract Documents are sufficient in scope and detail to indicate and convey understanding of all terms and conditions for performance of the Work.

IN WITNESS WHEREOF, the parties hereto have executed, or caused to be executed, by their duly authorized officials, this Agreement in six (6) copies, each of which shall be deemed an original on the date first above written. The Party of the First Part agrees to pay to the Party of the Second Part, upon satisfactory completion and delivery of the aforementioned, the sum of:

Amount in Figures: $ _____

Amount in Words: _____

_____

WITNESS:

_____

OWNER: The City of Quincy

BY: _____
MAYOR

Approved as to form:

BY: _____
CITY SOLICITOR

BY: _____
COMMISSIONER OF PUBLIC WORKS

BY: _____
PURCHASING AGENT

CONTRACTOR:

P.O. # _____

Company Name: _____

Contract #: _____

BY: _____

Name: _____

The undersigned, in compliance with MGL, Chapter 44, Section 31C, certifies that an appropriation in the amount required for this contract is available.

Title: _____

Address: _____

_____

BY: _____
DIRECTOR OF MUNICIPAL FINANCE

Telephone: _____

INDEMNITY AGREEMENT

In consideration of the award of Contract No._____

by the City of Quincy, hereinafter referred to as INDEMNITEE, to the CONTRACTOR/BIDDER:

_____

hereinafter referred to as INDEMNITOR, and for other good and valuable consideration, said INDEMNITOR agrees to hold INDEMNITEE, City of Quincy, and its various department and employees harmless from any and all liability, loss or damage that INDEMNITEE may suffer as the result of claims, demands, costs, including attorneys fees, or judgment or other actions against it by reason of any and all work done by or on behalf of the INDEMNITOR in connection with the above-referenced contract.

INDEMNITOR,

_____
By Duly Authorized Agent

Date:_____

CONTRACTOR'S CERTIFICATION

A Contractor will not be eligible for award of a contract unless he has submitted the following certification, which is deemed a part of the resulting contract.

_____ certifies that:

1. it intends to use the following listed construction trades in the work under the contract:

   _____

2. will comply with the minority manpower ratio and specific affirmative action steps contained herein; and

3. will obtain from each of its subcontractors and submit to the contracting administrating agency prior to the award of any subcontract under this contract the subcontractor certification required by these bid conditions.

_____
Contractor's Signature/Authorized Representative

B. SUBCONTRACTOR'S CERTIFICATION

Prior to the award of any subcontract, regardless of tier, the prospective subcontractor must execute and submit to the Prime Contractor the following certification, which will be deemed a part of the resulting subcontract.

_____ certifies that:

1. it tends to use the following listed construction trades in work under the subcontract:

   _____ ; and

2. will comply with the minority manpower ratio and specific affirmative action steps contained herein.

_____
Subcontractor's Signature

In order to ensure that said subcontractor's certification becomes a part of all subcontracts under the general contract, no subcontract shall be executed until an authorized representative of the state/municipal agency (or agencies) administering this project has determined, in writing, that said certification has been incorporated in such subcontract, regardless of tier. Any subcontract executed without such written approval may been deemed invalid.

NOTICE TO PROCEED

TO:_____ DATE:_____.

_____ Project:_____.

_____

You are hereby notified to commence WORK on or before

In accordance with contract documents the contract time is **60** calendar days. The date for completion of all work is therefore _____.

BY:_____.

Name:___DANIEL G. RAYMONDI

Title:_Commissioner of Public Works

ACCEPTANCE OF NOTICE

Receipt of the above NOTICE TO PROCEED is hereby acknowledged by:

_____.
(Company Name)

Signature: _____ Date: _____.

Print Name: _____ Title:_____.

Note: This form may be substituted with standard form issued by bonding agency.

PERFORMANCE BOND

KNOW ALL MEN BY THESE PRESENT: that

_____.
(Name of Contractor)

_____.
(Address of Contractor)

a _____, hereinafter called Principal, and
(corporation, partnership, individual)

_____.
(Name of Surety)

_____.
(Address of Surety)

hereinafter called Surety, are held and firmly bound unto _____.

_____.
(Name of Owner)

_____.
(Address of Owner)

hereinafter called OWNER, in the penal sum of: $ _____.

_____.
Dollars

in lawful money of the United States, for the payment of which sum will and truly to be made, we bind ourselves, successors, and assigns, jointly and severally, firmly by these present.

THE CONDITION OF THIS OBLIGATION is such that whereas, the Principal entered into a certain contract with the Owner, dated the ____ day of _____ 20___, a copy of which is hereto attached and made a part hereof for the construction of:

_____.

NOW, THEREFORE, if the Principal shall well, truly and faithfully perform its duties, all the undertakings, covenants, terms, conditions and agreements of said contract during the original term thereof, and any extensions thereof which may be granted by the City, with or without notice to the Surety and during the one year guarantee period, and if he shall satisfy all claims and demands incurred under such contract, and shall fully indemnify and save harmless the City from all costs and damages which it may suffer by reason of failure to do so, and shall reimburse and repay the City all outlay and expense which the City may incur in making good any default, then this obligation shall be void, otherwise to remain in full force and effect.

Note: This form may be substituted with standard form issued by bonding agency.

PROVIDED FURTHER, that said surety for value received hereby stipulates and agrees that no change, extension of time, alteration or addition to the terms of the Contract or to the WORK to be performed thereunder or the SPECIFICATIONS accompanying the same shall in any way affect its obligation on this BOND, and it does hereby waive notice of any such change, extension of time, alteration or addition to the terms of the Contract or to the WORK or to the SPECIFICATIONS.

PROVIDED FURTHER that no final settlement between the OWNER and the CONTRACTOR shall abridge the right of any beneficiary hereunder, whose claim may be unsatisfied.

IN WITNESS WHEREOF, this instrument is executed in ___ counterparts, one of which shall be deemed an original, this the ___ day of _____ 20___.

ATTEST

_____ _____.

Principal's Secretary Principal

[SEAL] BY_____.

_____.

(Address)

_____ _____.

(Witness as to Principal)

_____.

(Address)

_____ _____.

(Surety)

ATTEST:

_____.

(Surety Secretary)

[SEAL]

_____ BY:_____.

(Witness to Surety) (Attorney-In-Fact)

_____ _____.

(Address) (Address)

_____ _____.

NOTE: Date of Bond must not be prior to date of Contract. If Contractor is Partnership, all partners should execute bond.

IMPORTANT: Surety companies executing bonds must appear on the Treasury Department's most current list (Circular 570 as amended) and be authorized to transact business in the State of projects' location.

Note: This form may be substituted with standard form issued by bonding agency.

PAYMENT BOND

KNOW ALL MEN BY THESE PRESENT: that

_____.
(Name of Contractor)

_____.
(Address of Contractor)

a _____, hereinafter called Principal, and
(corporation, partnership, individual)

_____.
(Name of Surety)

_____.
(Address of Surety)

hereinafter called Surety, are held and firmly bound unto _____.

_____.
(Name of Owner)

_____.
(Address of Owner)

hereinafter called OWNER, in the penal sum of: $ _____.

_____.
(Dollars)

in lawful money of the United States, for the payment of which sum will and truly to be made, we bind ourselves, successors, and assigns, jointly and severally, firmly by these present.

THE CONDITION OF THIS OBLIGATION is such that whereas, the Principal entered into a certain contract with the Owner, dated the ____ day of _____ 20___, a copy of which is hereto attached and made a part hereof for the construction of:

_____.

NOW, THEREFORE, if the Principal shall promptly make payment to all persons, firms, subcontractors, and corporations furnishing materials for or performing authorized extension or modification thereof, including all amounts due for materials, lubricants, oil, gasoline, coal and coke, repairs on machinery, equipment and tools, consumed or used in connection with the construction of such WORK, and all insurance premiums on said WORK, and for all labor, performed in such WORK whether by SUBCONTRACTOR or otherwise, then this obligation shall be void, otherwise to remain in full force and effect.

Note: This form may be substituted with standard form issued by bonding agency.

PROVIDED FURTHER, that said surety for value received hereby stipulates and agrees that no change, extension of time, alteration or addition to the terms of the Contract or to the WORK to be performed thereunder or the SPECIFICATIONS accompanying the same shall in any way affect its obligation on this BOND, and it does hereby waive notice of any such change, extension of time, alteration or addition to the terms of the Contract or to the WORK or to the SPECIFICATIONS.

PROVIDED FURTHER that no final settlement between the OWNER and the CONTRACTOR shall abridge the right of any beneficiary hereunder, whose claim may be unsatisfied.

IN WITNESS WHEREOF, this instrument is executed in ___ counterparts, one of which shall be deemed an original, this the ___ day of _____ 20___.

ATTEST

_____ _____.

Principal's Secretary — Principal

[SEAL] — BY_____.

_____.

(Address)

_____ _____.

(Witness as to Principal)

_____.

(Address)

_____ _____.

(Surety)

ATTEST:

_____.

(Surety Secretary)

[SEAL]

_____ BY:_____.

(Witness to Surety) — (Attorney-In-Fact)

_____ _____.

(Address) — (Address)

_____ _____.

NOTE: Date of Bond must not be prior to date of Contract. If Contractor is Partnership, all partners should execute bond.

IMPORTANT: Surety companies executing bonds must appear on the Treasury Department's most current list (Circular 570 as amended) and be authorized to transact business in the State of projects' location.

CERTIFICATE OF INSURANCE

This is to certify that the _____ (Company) has issued the policies listed below, that these policies are written in accordance with the Company's standard policies and endorsements, except as indicated below or as noted in the attachments herewith, which policies and endorsements will be made available to ENGINEER and OWNER UPON request, that they provide coverage and limits of liability shown with respect to the insurance indicated that they are in force on this date, that all deductible amounts are indicated below, and that this Certificate is furnish in accordance with and for the purpose of satisfying the requirements of OWNER and ENGINEER in connection with the award and performance of a contract or agreement between_____

_____

_____(OWNER)and

1. Name of Insured_____.
2. Address of Insured _____.
3. Location and Description of Work _____.

_____. Project Contract No.

			Coverage and Limits of Liability (at least as shown below			
			Bodily Injury Liability		Property Damage Liability	
Policy Number	Effective Date	Expiration Date	Each Occurrence	Each Aggregate	Occurrence	Aggregate
A. Owner's Protective Liability has been issued at the expense of Above Insured to_____Owner.						
_____	_____	_____	$1,000,000.	$1,000,000.	$1,000,000.	$1,000,000.
B. Comprehensive General Liability						
_____	_____	_____	$1,000,000.	$1,000,000.	$1,000,000.	$1,000,000.

Including: 1. Operations Premises 2. Contractor's Protective 3.Contractual as Below 4.Products/Completed Operations 5. Personal Injury

Property Damage Ins.under policies A & B above includes Cover. for Explosion/Collapse/Underground Prop. Damage.

C. Auto Liability Including 1. Owner 2. Hired 3. Non-owned	_____	_____	_____	Each Person $1,000,000.00	Each Accident $1,000,000.	Each Accident $1,000,000.00
D. Workmen's Compensation	_____	_____	_____	Compensation Statutory State's Coverage B Limits $1,000,000. if applicable		
E. Builder's Risk Insurance - All Risk Completed Value form	_____	_____	_____	As called for in Contract or Agreement		

CONTRACTUAL LIABILITY

CONTRACTOR shall at all times indemnify and save harmless OWNER, ENGINEER and their respective officers, agents and employees on account of any and all claims, damages, losses, litigation, expenses, counsel fees and compensation arising out of injuries (including death) sustained by or alleged to have been sustained by the officers, agents and employees of said OWNER or ENGINEER or of CONTRACTOR, his subcontractors, or material men, and from injuries (including death sustained by or alleged to have been sustained by the public, any or all persons on or near the Work, or by any other person or property, real or personal (including property of said OWNER or ENGINEER caused in whole or in part by the acts, omissions, or neglect of CONTRACTOR including but not limited to any neglect in safeguarding the work or through the use of unacceptable materials in contracting the Work by CONTRACTOR, any subcontractor, material man, or anyone directly or indirectly employed by them or any of them while engaged in the performance of the contract, including the entire elapsed time from the date ordered to start work or the actual start, whichever occurs first, until completion of the one year correction period, as certified by OWNER or ENGINEER.

Policies A, B, C & D shall remain in effect during the one year correction period.

Such insurancer as is herein certified applies to all operations of the insured in connection with, and necessary and incidental to, the work herein described at the locations stated.

It is hereby understood and agreed that the above policies will not be restricted, suspended, materially changed, nor canceled without 15 days advance notice by registered mail to OWNER and ENGINEER._____.

_____ _____.

Authorized Representative Signature Address

STANDARD

GENERAL CONDITIONS

OF THE CONSTRUCTION CONTRACT

Prepared by

Engineers' Joint Contract Documents Committee

and

Issued and Published Jointly By

PROFESSIONAL ENGINEERS IN PRIVATE PRACTICE
A practice division of the
The National Society of Professional Engineers

AMERICAN CONSULTING ENGINEERS COUNCIL

AMERICAN SOCIETY OF CIVIL ENGINEERS

CONSTRUCTION SPECIFICATIONS INSTITUTE

This document has been approved and endorsed by
The Associated General Contractors of America

These General Conditions have been prepared for used with the CITY-Contractor Agreements (No. 1910-8-A-1 or 1910-8-A-2, 1983 editions). Their provisions are interrelated and a change in one may necessitate a change in the others. Comments concerning their usage are contained in the Commentary on Agreements for Engineering Services and Contract Documents, No 1910-9, 1981 edition. For guidance in the preparation of Supplementary Conditions, see Guide to the Preparation of Supplementary Conditions (No 1910-17, 1983 edition). When bidding is involved, the Standard Form of Instructions to Bidders (No.1910-12, 1983 edition) ma be used.

TABLE OF CONTENTS OF GENERAL CONDITIONS

Article Number	*Title*	*Page*
1	DEFINITIONS	00700-6
2	PRELIMINARY MATTERS	00700-8
3	CONTRACT DOCUMENTS: INTENT, AMENDING AND REUSE	00700-9
4	AVAILABILITY OF LANDS: PHYSICAL CONDITIONS: REFERENCE POINTS	00700-9
5	BONDS AND INSURANCE	00700-11
6	CONTRACTOR'S RESPONSIBILITIES	00700-14
7	OTHER WORK	00700-19
8	CITY'S RESPONSIBILITIES	00700-20
9	ENGINEER'S STATUS DURING CONSTRUCTION	00700-20
10	CHANGES IN THE WORK	00700-22
11	CHANGE OF CONTRACT PRICE	00700-22
12	CHANGE OF CONTRACT TIME	00700-26
13	WARRANTY AND GUARANTEE; TESTS AND INSPECTIONS; CORRECTION, REMOVAL OR ACCEPTANCE OF DEFECTIVE WORK	00700-27
14	PAYMENTS TO CONTRACTOR AND COMPETION	00700-29
15	SUSPENSION OF WORK AND TERMINATION	00700-32
16	DISPUTES BETWEEN CITY AND CONTRACTOR	00700-33
17	MISCELLANEOUS	00700-34
18	STATUTORY REQUIREMENTS IN GENERAL	00700-35

INDEX TO GENERAL CONDITIONS

Acceptance of Insurance ..... 5.8 - 5.9
Access to the Work 13.2
Addenda - definition of (see definition of
Specifications) 1
Agreement - definition of 1
All Risk Insurance 5.6
Amendment, Written , definition of 1
Application for Payment - definition of 1
Application for Payment, Final 14.12
Application for Progress Payment 14.2
Application for Progress Payment - review of .. 14.4-14.7
Authorized Variation in Work 9.5
Availability of Lands 4.1
Award, Notice of - defined 1

Before Starting Construction 2.5-2.7
Bid - definition of 1
Bonds and Insurance - in general 5
Bonds - definition of 1
Bonds, Delivery of 2.1
Bonds, Performance and Other 5.1, 5.2

Change Order - definition of 1
Change Orders - to be executed 11.9
Change Orders – instructions/forms 11.9
Changes in the Work 10
CITY May Correct *Defective* Work 13.14
CITY May Stop Work 13.10
CITY May Suspend Work, Terminate 15.1-15.4
CITY's Duty to Execute Change Orders 11.8
CITY's Liability Insurance 5.5
CITY's Representative - Engineer to serve as 9.1
CITY's Responsibilities - in general 8
CITY's Separate Representative at site 9.3

Claims, Waiver of - on Final Payment 14.16
Clarifications and Interpretations 9.4
Cleaning 6.17
Completion 14
Completion, Substantial 14.8-14.9
Conference, Preconstruction 2.8
Conflict, Error, Discrepancy - Contractor
To Report 2.5, 3.3
Construction Machinery, Equipment, etc. 6.4
Continuing Work 6.28
Contract Documents - amending and
supplementing 3.4-3.5
Contract Documents - definition of 1
Contract Documents - intent 3.1-3.3
Contract Documents - Reuse of 3.6
Contract Price, Change of 11
Contract Price - definition 1
Contractor May Stop Work or Terminate 15.5
Contractor's Continuing Obligation 14.15
Contractor's Duty to Report Discrepancy
in Documents 2.5, 3.2

Contractor's Fee - Cost Plus .. 11.4.5.6, 11.5.1, 11.6-11.7
Contractor's Liability Insurance 5.3
Contractor's Responsibilities - in general 6
Contractor's Warranty of Title 14.3
Contractors - other 7
Contractual Liability Insurance 5.4
Coordinating Contractor - definition of 7.3
Coordination 7.3
Copies of Documents 2.2
Correction or Removal of Defective Work 13.11
Correction Period, One Year 13.12
Correction, Removal or Acceptance of
Defective Work - in general 13.11-13.14
Cost - net decrease 11.6.1
Cost of Work 11.4-11.5
Costs, Supplemental 11.4.5

Defective - Definition of 1
Defective Work, Acceptance of 13.13
Defective Work, Correction or Removal of 13.11
Defective Work - in general 13, 14.7, 14.11
Defective Work, Rejecting 9.6
Definitions 1
Delivery of Bonds 2.1
Determination for Unit Prices 9.10
Disputes, Decisions by Engineer 9.11-9.12
Documents, Copies of 2.2
Documents, Record 6.19
Documents, Reuse 3.6
Drawings- Definition of 1

Easements 4.1.1
Effective date of Agreement - definition of 1
Emergencies 6.22
Engineer - definition of 1
Engineer's Decisions 9.10-9.12
Engineer's -Notice Work is Acceptable 14.13
Engineer's Recommendation of Payments ... 14.4, 14.13
Engineer's Responsibilities,
Limitations on 11, 9.13-9.16
Engineer's Status During Construction - in general 9
Equipment, Labor, Materials and 6.3-6.5
Equivalent Materials and Equipment 6.7
Explorations of physical conditions 4.2.1

Fee, Contractor's - Costs Plus 11.6
Field Order - definition of 1
Field Order - issued by Engineer 3.5.1, 9.5
Final Application of Payment 14.12
Final Inspection 14.11
Final Payment and Acceptance 14.13
Final Payment, Recommendation of 14.13-14.14

General Provisions ..... 17.3 - 17.4
General Requirements - definition of 1

General Requirements - principal
References to 2.6, 4.4, 6.4, 6.6-6.7, 6.23
Giving Notice 17.1
Guarantee of Work - by Contractor 13.1
Indemnification 6.29-6.33
Inspection, Final 14.11
Inspection, Tests and 13.3
Insurance, Bonds and - in general 5
Insurance, Certificates of 2.7, 5
Insurance - completed operations 5.3
Insurance, Contractor's Liability 5.3
Insurance Contractual Liability 5.4
Insurance, CITY's Liability 5.5
Insurance, Property 5.5-5.6
Insurance - Waiver of Rights 5.7
Intent of Contract Documents 3.3, 9.14
Interpretations and Clarifications 9.4
Investigations of physical conditions 4.2

Labor, Materials and Equipment 6.3-6.5
Laws and Regulations - definition of 1
Laws and Regulations - general 6.14
Liability Insurance - Contractor's 5.3
Liability Insurance - CITY's 5.5
Liens - definition of 14.7
Limitations on Engineer's
Responsibilities 11, 9.13-9.16

Materials and equipment - furnished by Contractor .. 6.3
Materials and equipment - not
incorporated in Work 14.2
Materials or equipment - equivalent 6.7
Miscellaneous Provisions 17
Multi-prime contracts 7

Notice, Giving of 17.1
Notice of Acceptability of Project 14.13
Notice of Award - definition of 1
Notice to Proceed - definition of 1
Notice to Proceed -giving of 2.3

"Or Equal" Items 6.7
Other contractors 7
Other work 7
Overtime Work - prohibition of 6.3

Partial Utilization 14.10
Partial Utilization - definition of 1
Partial Utilization - Property Insurance 5.10
Patent Fees and Royalties 6.12
Payments, Recommendations of 14.4-14.13
Payments to Contractor - in general 14
Payments to Contractor - when due 14.4, 14.13
Payments to Contractor - withholding 14.7
Performance and other Bonds 5.1-5.2
Permits 6.13
Physical Conditions 4.2
Physical Conditions - Engineer's review 4.2.4
Physical Conditions - existing structures 4.2.2
Physical Conditions - explorations and reports 4.2.1

Physical Conditions - possible documents change .. 4.2.5
Physical Conditions - price and time adjustments .. 4.2.6
Physical Conditions - report of differing 4.2.3
Physical Conditions - Underground Facilities 4.3
Preconstruction Conference 2.8
Preliminary Matters 2
Premises, Use of 6.16-6.18
Price, Change of Contract 11
Price-Contract - definition of 1
Progress Payment, Applications for 14.2
Progress Payment, retainage 14.2
Progress schedule 2.6.1, 2.9, 6.6, 15.2.6
Project - definition of 1
Project Representation - provisions for 9.3
Project Representative, Resident - definition of 1
Project, Starting the 2.4
Property Insurance 5.5-5.6
Property Insurance - Partial Utilization 5.10
Property Insurance - Receipt and Application
of Proceeds 5.5-5.6
Protection, Safety and 6.20-6.21
Punch List 14.11

Recommendation of Payment 14.4, 14.13
Record Documents 6.19
Reference Points 4.4-4.5
Regulations, Laws and 6.14
Rejecting *Defective* Work 9.6
Related Work at Site 7.1-7.3
Remedies Not Exclusive 17.4
Removal or Correction of *Defective* Work 13.11
Resident Project Representative - definition of 1
Resident Project Representative - provisions for 9.3
Responsibilities, Contractor's - in general 6
Responsibilities, Engineer's - in general 9
Responsibilities, CITY's - in general 8
Retainage 14.2.1
Reuse of Documents 3.6
Rights of Way 4.1
Royalties, Patent Fees and 6.12

Safety and Protection 6.20-6.21
Samples 6.23-6.27
Schedules of progress 2.6.1, 2.9, 6.6, 15.2.6
Schedule of Shop Drawings
Submissions 2.6.2, 2.8-2.9, 6.23, 14.1
Schedule of Values 2.6, 2.9, 14.1
Schedules, Finalizing 2.9
Shop Drawings and Samples 6.23-6.27
Shop Drawings - Definition of 1
Shop Drawings, use to approve substitutions 6.7.3
Site, Visits to - by Engineer 9.2
Specifications - definition of 1
Starting Construction, Before 2.5-2.7
Starting the Project 2.4
Stopping Work - by Contractor 15.5
Stopping Work - by CITY 13.10
Subcontractor - definition of 1
Subcontractors - in general 6.8-6.11
Subcontracts - required provisions 6.11, 11.4.3

Substantial Completion - certification of 14.8-14.9
Substantial Completion - definition of 1
Substitute or "Or Equal" Items 6.7
Subsurface Conditions 4.2-4.3
Supplemental costs 11.4.5
Supplementary Conditions - definition of 1
Supplementary Conditions - principal references to .. 2.2, 4.2, 5.1, 5.3, 5.6-5.8, 6.3, 6.13, 6.23, 7.4, 9.3
Supplementing Contract Documents 3.4-3.5
Supplier - definition of 1
Supplier - principal references to 3.6, 6.5, 6.8-6.9, 6.20, 6.24, 9.13, 9.16, 13.4, 14.12
Surety - consent to payment 14.12, 14.14
Surety - Engineer has no duty to 9.13
Surety - notice to 10.1, 10.5
Surety - qualification of 5.1-5.2
Suspending Work, by CITY 15.1
Suspension of Work and Termination - in general 15
Superintendent - Contractor's 6.2
Supervision and Superintendence 6.1-6.2

Taxes - Payment by Contractor 6.15
Termination - by Contractor 15.5
Termination - by CITY 15.2-15.4
Termination, Suspension of Work and - in general ... 15
Tests and Inspections 13.3
Time, Change of Contract 12
Time, Computation of 17.2
Time, Contract - definition of 1

Underground Facilities - definition of 1
Underground Facilities - not shown or indicated 4.3.2
Underground Facilities - protection of 4.3, 6.20
Underground Facilities - shown or indicated 4.3.1
Unit Price Work - definition of 1
Unit Price Work - general 11.2, 14.1
Unit Prices 11.3.1
Unit Prices, Determinations for 9.10
Use of Premises 6.16-6.18
Utility Owners 6.13, 7.2

Values, Schedule of 2.6, 2.9, 14.1
Variations in Work - Authorized 9.5
Visits to Site - by Engineer 9.2

Waiver of Claims - on Final Payment 14.16
Waiver of Rights to insured parties 5.10, 6.11
Warranty and Guarantee - by Contractor 13.1
Warranty of Title, Contractor's 14.3
Work, Access to 13.2
Work - by others 7
Work, Continuing During Disputes 6.29
Work, Cost of 11.4-11.5
Work - definition of 1
Work Directive Change - definition of 1
Work Directive Change - principal references to 3.4.3, 10.1-10.2
Work, Neglected by Contractor 13.14
Work, Stopping by Contractor 15.5
Work, Stopping by CITY 15.2-15.4
Written Amendment - definition of 1
Written Amendment - principal references to 3.4.1, 10.1, 11.2, 12.1

Uncovering Work 13.8-13.9

GENERAL CONDITIONS

ARTICLE 1 - DEFINITIONS

Wherever used in these General Conditions or in the other Contract Documents, the following terms have the meanings indicated which are applicable to both the singular and plural thereof:

Addenda - Written or graphic instruments issued prior to the opening of Bids which clarify, correct or change the bidding documents or the Contract Documents.

Agency – Any Federal, State, or County Department wh o has either authority, jurisdiction, statutory, regulatory authority and/or a financial interest in the project.

Agreement - The written agreement between CITY and CONTRACTOR covering the WORK to be performed; other Contract Documents are attached to the Agreement and make a part thereof as provided therein.

Application for Payment - The form accepted by ENGINEER which is to be used by CONTRACTOR in requesting progress or final payments and which is to include such supporting documentation as is required by the Contract Documents.

Bid - The offer or proposal of the bidder submitted on the prescribed form setting forth the prices for the WORK to be performed.

Bidder – Any individual, partnership, joint venture, corporation or a firm submitting a price directly or through an authorized representative for the purpose of performing actual construction and/or construction related services and activities.

Bonds - Bid, performance and payment bonds and other instruments of security.

Change Order - A document recommended by ENGINEER, which is signed by CONTRACTOR and CITY and authorizes an addition, deletion, or revision in the WORK, or an adjustment in the Contract Price or the Contract Time, issued on or after the Effective Date of the Agreement.

Conditions of the Contract – The combined General and Supplementary Conditions; Special Conditions and the Agreement

Contract Documents - The invitation to Bid, instructions to Bidders, Agreement, Addenda (which pertain to the Contract Documents), CONTRACTOR's Bid (including documentation accompanying the Bid and any post-Bid documentation submitted prior to the Notice of Award) when attached as an exhibit to the Agreement, the Bonds, these General Conditions, the Supplementary Conditions, the Specifications, and the Drawings as the same are more specifically identified in the Agreement, together with all amendments, modifications and supplements issued pursuant to paragraphs 3.4 and 3.5 on or after the Effective Date of the Agreement.

Contract Price - The moneys payable by CITY to CONTRACTOR under the Contract Documents as stated in the Agreement (subject to the provisions of paragraph 11.8 in the case of Unit Price Work).

Contract Time - The number of days (computed as provided in paragraph 17.2) or the date stated in the Agreement for the completion of the WORK.

CONTRACTOR - The person, firm or corporation with whom CITY has entered into the Agreement.

Defective - An adjective which when modifying the word WORK refers to WORK that is unsatisfactory, faulty or deficient, or does not conform to the Contract Documents, or does not meet the requirements of any inspection, reference standard, test or approval referred to in the Contract Documents, or has been damaged prior to ENGINEER's recommendation of final payment (unless responsibility for the protection thereof has been assumed by CITY at Substantial Completion in accordance with paragraph 14.8 or 14.10).

Drawings - The drawings which show the character and scope of the WORK to be performed and which have been prepared or approved by ENGINEER and are referred to in the Contract Documents.

Effective Date of the Agreement - The date indicated in the Agreement on which it becomes effective, but if no such date is indicated it means the date on which the Agreement is signed and delivered by the last of the two parties to sign and deliver.

ENGINEER - The person, firm or corporation named as such in the Agreement.

Field Order - A written order issued by ENGINEER which orders minor changes in the WORK in accordance with paragraph 9.5 but which does not involve a change in the Contract Price or the Contract Time.

General Requirements - Sections of Division 1 of the Specifications.

Laws and Regulations; Laws or Regulations - Laws, rules, regulations, ordinances, codes and/or orders.

Notice of Award - The written notice by CITY to the apparent successful bidder stating that upon compliance by the apparent successful bidder with the conditions precedent enumerated therein, within the time specified, CITY will sign and deliver the Agreement.

Notice to Proceed - A written notice given by CITY to CONTRACTOR (with a copy to ENGINEER) fixing the date on which the Contract Time will commence to run and on which CONTRACTOR shall start to perform CONTRACTOR's obligations under the Contract Documents.

OWNER/CITY - The City of Quincy, Massachusetts and/or its authorized representatives, officers, designated contract awarding authority, Engineer and/or construction management personnel with whom CONTRACTOR has entered into the Agreement and for whom the WORK is to be performed.

Partial Utilization - Placing a portion of the WORK in service for the purpose for which it is intended (or a related purpose) before reaching Substantial Completion for all the WORK.

Project - The total construction of which the WORK to be provided under the Contract Documents may be the whole, or a part as indicated elsewhere in the Contract Documents.

Project Manual – The Invitation to Bid; Instructions to Bidders; Bid Form; Agreement; Bonds; General and Supplementary Conditions; Technical Specifications and Drawings; and Appendices. These individual sections constitute conditions of the contract.

Resident Project Representative - The authorized representative of ENGINEER who is assigned to the site or any part thereof.

Shop Drawings - All drawings, diagrams, illustrations, schedules and other data which are specifically prepared by or for CONTRACTOR to illustrate some portion of the WORK and all illustrations, brochures, standard schedules, performance charts, instructions, diagrams, and other information prepared by a Supplier and submitted by CONTRACTOR to illustrate material or equipment for some portion of the WORK.

Site - The specific area adjacent to and including the area upon which the construction work is performed.

Specifications: – Those portions of the Contract Documents consisting of written technical descriptions of materials, equipment, construction systems, standards and workmanship as applied to the Work and other administrative details applicable thereto.

Subcontractor - An individual, firm or corporation having a direct contract with CONTRACTOR or with any other Subcontractor for the performance of a part of the WORK at the site.

Substantial Completion – It shall mean that either the Work required by the Contract has been completed except for work having a Contract value of less than one percent of the then adjusted total contract price, or all of the Work has been substantially completed and opened to the City's use except for minor incomplete or unsatisfactory work items that do not materially impair the usefulness of the Work as required by the Contract.

Supplementary Conditions - The part of the Contract Documents which amends or supplements these General Conditions.

Supplier - A manufacturer, fabricator, supplier, distributor, materialman or vendor.

Underground Facilities - All pipelines, conduits, ducts, cables, wires, manholes, vaults, tanks, tunnels, or other such facilities or attachments, and any encasements containing such facilities which have been installed underground to furnish any of the following services or materials: electricity, gases, steam, liquid petroleum products, telephone or other communications, cable television, sewage and drainage removal, traffic or other control systems or water.

Unit Price Work - WORK to be paid for on the basis of unit prices.

Work - The entire completed construction or the various separately identifiable parts thereof required to be furnished under the Contract documents. WORK is the result of performing services, furnishing labor and furnishing and incorporating materials and equipment into the construction, all as required by the Contract Documents.

Work Directive Change - A written directive to CONTRACTOR, issued on or after the Effective Date of the Agreement and signed by CITY and recommended by ENGINEER, ordering an addition, deletion or revision in the WORK, or responding to differing or unforeseen physical conditions under which the WORK is to be performed as provided in paragraph 4.2 or 4.3 or to emergencies under paragraph 6.22. A Work Directive Change may not change to Contract Price or the Contract time, but is evidence that the parties expect that the change directed or documented by a Work Directive Change will be incorporated in a subsequently issued Change Order following negotiations by the parties as to its effect, if any, on the Contract Price or Contract Time as provided in paragraph 10.2.

Written Amendment - A written amendment of the Contract Documents, signed by CITY and CONTRACTOR on or after the Effective Date of the Agreement and normally dealing with the nonengineering or nontechnical rather than strictly WORK-related aspects of the Contract Documents.

ARTICLE 2 - PRELIMINARY MATTERS

Delivery of Bonds:

2.1. When CONTRACTOR delivers the executed Agreements to CITY, CONTRACTOR shall also deliver to CITY such Bonds as CONTRACTOR may be required to furnish in accordance with paragraph 5.1.

Copies of Documents:

2.2. The CITY shall furnish to CONTRACTOR up to three copies (Unless otherwise specified in the Supplementary Conditions) of the Contract Documents as are reasonably necessary for the execution of the WORK. Additional copies will be furnished, upon request, at the cost of reproduction.

Commencement of Contract Time: Notice to Proceed:

2.3. The Contract Time will commence to run on the fifteenth day after the Effective Date of the Agreement and/or within ten calendar days after the issuance of a Notice to Proceed. A Notice to Proceed may be given at any time after the Effective Date of the Agreement unless mutually agreed otherwise. The Contract Time will commence to run on the sixtieth day after the day of Bid opening or the fifteenth day after the Effective Date of the Agreement, whichever date is earlier.

Starting the Project:

2.4. CONTRACTOR shall start to perform the WORK on the date when the Contract Time commences to run, but no WORK shall be done at the site prior to the date on which the Contract Time commences to run.

Before Starting Construction:

2.5. Before undertaking each part of the WORK, CONTRACTOR shall carefully study and compare the Contract Documents and check and verify pertinent figures shown thereon and all applicable field measurements. CONTRACTOR shall promptly report in writing to ENGINEER any conflict, error or discrepancy which CONTRACTOR may discover and shall obtain a written interpretation or clarification from ENGINEER before proceeding with any WORK affected thereby; however, CONTRACTOR shall not be liable to CITY or ENGINEER for failure to report any conflict, error or discrepancy in the Contract Documents, unless CONTRACTOR had actual knowledge thereof or should reasonably have known thereof.

2.6. Within ten days after the "Notice to Proceed" (unless otherwise specified in the General Requirements), CONTRACTOR shall submit to ENGINEER for review:

2.6.1. an estimated progress schedule indicating the starting and completion dates of the various stages of the WORK;

2.6.2. a preliminary schedule of Shop Drawing submissions; and

2.6.3. a preliminary schedule of values for all of the WORK which will include quantities and prices of items aggregating the Contract Price and will subdivide the WORK into component parts in sufficient detail to serve as the basis for progress payments during construction. Such prices will include an appropriate amount of overhead and profit applicable to each item of WORK which will be confirmed in writing by CONTRACTOR at the time of submission.

2.7. Before execution of the Agreement, the CONTRACTOR shall deliver to the CITY with a copy to the Engineer, Certificates of Insurance (and other evidence requested by the CITY) which the CONTRACTOR is required to purchase and maintain in accordance with the requirements of Article 5, as applicable.

Pre-construction Conference:

2.8. Within twenty days after the Effective Date of the Agreement, but before CONTRACTOR starts WORK at the site, a conference attended by CONTRACTOR, ENGINEER, and others as appropriate will be held to discuss the schedules referred to in paragraph 2.6, to discuss procedures for handling Shop Drawings and other submittals and for processing Applications for Payment; and to establish a working understanding among the parties as to the WORK.

Finalizing Schedules:

2.9. At least ten days before submission of the first Application for Payment a conference attended by CONTRACTOR, ENGINEER, and others as appropriate will be held to finalize schedules submitted in accordance with paragraph 2.6. The finalized progress schedule will be acceptable to ENGINEER as providing an orderly progression of the WORK to completion within the Contract Time, but such acceptance will neither impose on ENGINEER responsibility for the progress or scheduling of the WORK nor relieve the CONTRACTOR from full responsibility therefor. The finalized schedule of Shop Drawing submissions will be acceptable to ENGINEER as providing a workable arrangement from processing the submissions. The finalized schedule of values will be acceptable to ENGINEER as to form and substance.

ARTICLE 3 - CONTRACT DOCUMENTS: INTENT, AMENDING, REUSE

Intent:

3.1 The Contract Documents comprise the entire agreement between CITY and CONTRACTOR concerning the WORK. The Contract Documents are complementary; what is called for by one is as binding as if called for by

all. The Contract Documents will be construed in accordance with the law of the place of the Project.

3.1.1 Each and every provision of law and clause required by law to be inserted in these Contract Documents shall be deemed to be inserted herein, and they shall be read and enforced as though they were included herein, and if through mistake or otherwise, any such provision is not inserted, or if not correctly inserted, then upon the application of either party, the Contract Documents shall forthwith be physically amended to make such insertion.

3.2. It is the intent of the Contract Documents to describe a functionally complete Project (or part thereof) to be constructed in accordance with the Contract Documents. Any WORK, materials or equipment that may reasonably be inferred from the Contract Documents as being required to produce the intended result will be supplied whether or not specifically called for. When words which have a well-known technical or trade meaning are used to describe WORK, materials or equipment such words shall be interpreted in accordance with that meaning. Reference to standard specifications, manuals, or codes or any technical society, organization or association, or to the Laws or Regulations of any governmental authority, whether such reference be specific or by implication, shall mean the latest standard specification, manual, code or Laws or Regulations in effect at the time of opening of Bids (or, on the Effective Date of the Agreement if there were no Bids), except as may be otherwise specifically stated. However, no provision of any referenced standard specification, manual or code (whether or not specifically incorporated by reference in the Contract Documents) shall be effective to change the duties and responsibilities of CITY, CONTRACTOR or ENGINEER, or any of their consultants, agents or employees from those set forth in the Contract Documents, nor shall it be effective to assign to ENGINEER, or any ENGINEER's consultants, agents or employees, any duty or authority to supervise or direct the furnishing or performance of the WORK or any duty or authority to undertake responsibility contrary to the provisions of paragraph 9.15 or 9.16. Clarifications and interpretations of the Contract Documents shall be issued by ENGINEER as provided in paragraph 9.4.

3.3. If, during the performance of the WORK, CONTRACTOR finds a conflict, error or discrepancy in the Contract Documents, CONTRACTOR shall so report to ENGINEER in writing at once and before proceeding with the WORK affected thereby shall obtain a written interpretation or clarification from ENGINEER; however, CONTRACTOR shall not be liable to CITY or ENGINEER for failure to report any conflict, error or discrepancy in the Contract Documents unless CONTRACTOR had actual knowledge thereof or should reasonably have known thereof.

Amending and Supplementing Contract Documents:

3.4. The Contract Documents may be amended to provide for additions, deletions and revisions in the WORK or to modify the terms and conditions thereof in one or more of the following ways:

3.4.1. a formal Written Amendment;

3.4.2. a Change Order (pursuant to paragraph 10.4), or

3.4.3 a Work Directive Change (pursuant to paragraph 10.1).

As indicated in paragraphs 11.2 and 12.1, Contract Price and Contract Time may only be changed by a Change Order or a Written Amendment.

3.5. In addition, the requirements of the Contract Documents may be supplemented, and minor variations and deviations in the WORK may be authorized, in one or more of the following ways:

3.5.1 a Field Order (pursuant to paragraph 9.5);

3.5.2 ENGINEER's approval of a Shop Drawing or sample (pursuant to paragraphs 6.26 and 6.27), or

3.5.3 ENGINEER's written interpretation or clarification (pursuant to paragraph 9.4).

Reuse of Documents:

3.6. Neither CONTRACTOR nor any Subcontractor or Supplier or other person or organization performing or furnishing any of the WORK under a direct or indirect contract with CITY shall have or acquire any title to or ownership rights in any of the Drawings, Specifications or other documents (or copies of any thereof) prepared by or bearing the seal of ENGINEER; and they shall not reuse any of them on extensions of the Project or any other project without written consent of CITY and ENGINEER and specific written verification or adaptation by ENGINEER.

ARTICLE 4 - AVAILABILITY OF LANDS; PHYSICAL CONDITIONS; REFERENCE POINTS

Availability of Lands:

4.1. CITY shall furnish, as indicated in the Contract Documents, the lands upon which the WORK is to be performed, rights-of-way and easements for access thereto, and such other lands which are designated for the use of CONTRACTOR. Easements for permanent structures or permanent changes in existing facilities will be obtained and paid for by CITY, unless otherwise provided in the Contract Documents. If CONTRACTOR believes that any delay in CITY's furnishing these lands, rights-of-way, or easements entitles CONTRACTOR to an extension of the Contract Time, CONTRACTOR may make a claim therefor as provided in Article 12. CONTRACTOR shall provide for all additional lands and access thereto that may

be required for temporary construction facilities or storage of materials and equipment.

4.1.1 4.1.1 If all lands, easements, and rights-of-way are not obtained as herein contemplated before construction begins, CONTRACTOR shall begin the WORK upon such land and rights-of-way as CITY has previously acquired and no claim for damages whatsoever will be allowed by reason of the delay in obtaining the remaining lands, easements, and rights-of-way. Should the CITY be prevented or enjoined from proceeding with the WORK, or from authorizing its prosecution, either before or after the commence, by reason of any litigation, or by reason of its inability to procure any lands, easements, or rights-of-way for the WORK, CONTRACTOR shall not be entitled to make or assert claim for damage by reason of said delay, or to withdraw from the Agreement except by consent of CITY. Time for completion of the WORK will be extended as provided in Article 12, to such time as CITY determines will compensate for the time lost by such delay.

Physical Conditions:

4.2.1. *Explorations and Reports:* Reference is made to the Supplementary Conditions for identification of those reports of explorations and tests of subsurface conditions at the site that have been utilized by ENGINEER in preparation of the Contract Documents. CONTRACTOR may rely upon the technical and non-technical data contained in such reports. However, the City does not guarantee the accuracy, interpretations or opinions contained therein or for the completeness thereof for CONTRACTOR's purposes. Except as indicated in the immediately preceding sentence and in paragraph 4.2.6, CONTRACTOR shall have full responsibility with respect to subsurface conditions at the site.

4.2.2. *Existing Structures:* Reference is made to the Supplementary Conditions for identification of those drawings of physical conditions in or relating to existing surface and subsurface structures (except Underground Facilities referred to in paragraph 4.3) which are at or contiguous to the site that have been utilized by ENGINEER in preparation of the Contract Documents. CONTRACTOR may rely upon the accuracy of the technical data contained in such drawings, but not for the completeness thereof for CONTRACTOR's purposes. Except as indicated in the immediately preceding sentence and in paragraph 4.2.6, CONTRACTOR shall have full responsibility with respect to physical conditions in or relating to such structures.

4.2.3. *Report of Differing Conditions:* If CONTRACTOR believes that:

4.2.3.1. any technical data on which CONTRACTOR is entitled to rely as provided in paragraphs 4.2. and 4.2.1 is inaccurate, or

4.2.3.2. any physical condition uncovered or revealed at the site differs materially from that indicated, reflected or referred to in the Contract Documents,

CONTRACTOR shall, promptly after becoming aware thereof and before performing any WORK in connection therewith (except in an emergency as permitted by paragraph 6.22), notify CITY and ENGINEER in writing about the inaccuracy or difference.

4.2.4. *ENGINEER's Review:* ENGINEER will promptly review the pertinent conditions, determine the necessity of obtaining additional explorations or tests with respect thereto and advise CITY in writing (with a copy to CONTRACTOR) of ENGINEER's findings and conclusions.

4.2.5. *Possible Document Change:* If ENGINEER concludes that there is a material error in the Contract Documents or that there is a material error in the Contract Documents or that because of newly discovered conditions a change in the Contract Documents is required, a Work Directive Change or a Change Order will be issued as provided in Article 10 to reflect and document the consequences of the inaccuracy or difference.

4.2.6. *Possible Price and Time Adjustments:* In each such case, an increase or decrease in the Contract Price or an extension or shortening of the Contract Time, or any combination thereof, will be allowable to the extent that they are attributable to any such inaccuracy or difference. If CITY and CONTRACTOR are unable to agree as to the amount or length thereof, a claim may be made therefor as provided in Articles 11 and 12.

4.2.7. Information on Drawings and any statements in the Project Manual referring to the condition under which the WORK is to be performed or the existence of utilities or other underground structures are not guaranteed to be correct or to be complete representation of all existing data with reference to conditions affecting the WORK. Efforts have been made, however, to make this information complete and accurate on the basis of all data and information which could be procured by ENGINEER. If, in the opinion of the ENGINEER, permanent relocation of a utility not otherwise provided for is required, he shall direct CONTRACTOR, in writing, to perform the WORK. WORK so directed will be paid as provided in Article 11 of these General Conditions.

4.2.8. Adjustments resulting from sub-surface or latent conditions will be in accordance with Massachusetts General Laws, Chapter 30, Section 39N.

Physical Conditions - Underground Facilities:

4.3.1. *Shown or Indicated:* The information and data shown or indicated in the Contract Documents with respect to existing Underground Facilities at or contiguous to the site is based on information and data furnished to CITY or

ENGINEER by the owners of such Underground Facilities or by others. Unless it is otherwise expressly provided in the Supplementary Conditions:

4.3.1.1. CITY and ENGINEER shall not be responsible for the accuracy or completeness of any such information or data: and,

4.3.1.2. CONTRACTOR shall have full responsibility for reviewing and checking all such information and data, for locating all Underground Facilities shown or indicated in the Contract Documents, for coordination of the WORK with the CITYs of such Underground Facilities during construction, for the safety and protection thereof as provided in paragraph 6.20 and repairing any damage thereto resulting from the WORK, the cost of all of which will be considered as having been included in the Contract Price.

4.3.2. *Not Shown or Indicated:* If an Underground Facility is uncovered or revealed at or contiguous to the site which was not shown or indicated in the Contract Documents and which CONTRACTOR could not reasonably have been expected to be aware of, CONTRACTOR shall, promptly after becoming aware thereof and before performing any WORK affected thereby (except in an emergency as permitted by paragraph 6.22), identify the CITY of such Underground Facility and give written notice thereof to that CITY and to CITY and ENGINEER. ENGINEER will promptly review the Underground Facility to determine the extent to which the Contract Documents should be modified to reflect and document the consequences of the Underground Facility, and the Contract Documents will be amended or supplemented to the extent necessary. During such time, CONTRACTOR shall be responsible for the safety and protection of such Underground Facility as provided in paragraph 6.20. CONTRACTOR shall be allowed an increase in the Contract Price or an extension of the Contract Time, or both, to the extent that they are attributable to the existence of any Underground Facility that was not shown or indicated in the Contract Documents and which CONTRACTOR could not reasonably have been expected to be aware of. If the parties are unable to agree as to the amount or length thereof, CONTRACTOR may make a claim therefor as provided in Articles 11 and 12.

Reference Points:

4.4. CITY shall provide engineering surveys to establish reference points for construction which in ENGINEER's judgment are necessary to enable CONTRACTOR to proceed with the WORK. CONTRACTOR shall be responsible for laying out the WORK (unless otherwise specified in the General Requirements), shall protect and preserve the established reference points and shall make no changes or relocations without the prior written approval of CITY. CONTRACTOR shall report to ENGINEER whenever any reference point is lost or destroyed or requires relocation because of necessary changes in grades or locations, and shall be responsible for the accurate replacement or relocation of such reference points by professionally qualified personnel.

4.5 ENGINEER may check lines, elevations, reference marks, batter boards, etc., set by CONTRACTOR and CONTRACTOR shall correct any errors disclosed by such check. Such a check shall not be considered as approval of CONTRACTOR's WORK and shall not relieve CONTRACTOR of the responsibility for accurate construction of the entire WORK. CONTRACTOR shall furnish personnel to assist ENGINEER in checking lines and grades.

ARTICLE 5 - BONDS AND INSURANCE

Performance and Other Bonds:

5.1. CONTRACTOR shall furnish performance and payment Bonds, each in an amount at least equal to the Contract Price as security for the faithful performance and payment of all CONTRACTOR's obligations under the Contract Documents. These Bonds shall remain in effect at least until one year after the date when final payment becomes due, except as otherwise provided by Law or Regulation or by the Contract Documents. CONTRACTOR shall also furnish such other Bonds as are required by the CITY. All Bonds shall be in the forms prescribed by Law or Regulation or by the Contract Documents and be executed by such sureties as are named in the current list of "Companies Holding Certificates of Authority as Acceptable Sureties on Federal Bonds and as Acceptable Reinsuring Companies" as published in Circular 570 (amended) by the Audit Staff Bureau of Accounts, U.S. Treasury Department. All Bonds signed by an agent must be accompanied by a certified copy of the authority to act.

5.2. If the surety on any Bond furnished by CONTRACTOR is declared a bankrupt or becomes insolvent or its right to do business is terminated in any state where any part of the Project is located or it ceases to meet the requirements of paragraph 5.1, CONTRACTOR shall within five days thereafter substitute another Bond and Surety, both of which must be acceptable to CITY.

Contractor's Liability Insurance:

5.3. CONTRACTOR shall purchase and maintain such comprehensive general liability and other insurance as is appropriate for the WORK being performed and furnished and as will provide protection from claims set forth below which may arise out of or result from CONTRACTOR's performance and furnishing of the WORK and CONTRACTOR's other obligations under the Contract Documents, whether it is to be performed or furnished by CONTRACTOR, by any Subcontractor, by anyone directly or indirectly employed b any of them to perform or furnish any of the WORK, or by anyone for whose acts any of

them may be liable. The type of claims may include, but not necessarily be limited to:

1) Claims under workers' or workmen's compensation, disability benefits and other similar employee benefit acts:

2) Claims for damages because of bodily injury, occupational sickness or disease, or death of CONTRACTOR's employees:

3) Claims for damages because of bodily injury, occupational sickness or disease, or death of CONTRACTOR's employees:

4) Claims for damages insured by personal injury liability coverage which are sustained (i) by any person as a result of an offense directly or indirectly related to the employment of such person by CONTRACTOR, or (ii) by any other person for any other reason:

5) Claims for damages, other than to the WORK itself, because of injury to or destruction of tangible property wherever located, including loss of use resulting therefrom:

6) Claims arising out of operation of Laws or Regulations for damages because of bodily injury or death of any person or for damage to property; and

7) Claims for damages because of bodily injury or death of any person or property damage arising out of the ownership, maintenance or use of any motor vehicle.

5.3.1 5.3.1 The limits of liability for insurance against Workers' Compensation and/or Employers' Liability shall be as per MGL c152 and shall provide coverage for not less than the following amounts, or greater where required by law.

5.3.1.1 Worker's Compensation (MGL c152)
5.3.1.2 Employer's Liablity $1,000,000.

5.3.2. Comprehensive General Liability including Operations/Premises, Contractor's Protective, Products/Completed works, Personal Injury and Property Damage shall conform to the applicable laws and shall provide coverage for not less than the following amounts or greater where required by law.

5.3.2.1 Bodily injury $1,000,000. Each Occurrence
$1,000,000. Annual Aggregate

5.3.2.2 Property Damage: $1,000,000. Each Occurrence
including explosion $1,000,000. Annual Aggregate
collapse and under-
ground coverage

5.3.2.3 Personal Injury $1,000,000. Annual Aggregate
with employement
exclusion deleted

5.3.3 Comprehensive Automobile Liability, including vehicles and equipment owned or hired by the CITY, the CONTRACTOR, SUBCONTRACTORs and Non-Owned vehicles involved in accidents shall conform to the applicable laws and shall provided coverage for not less than the following amounts or greater where required by law.

5.3.3.1 Bodily Injury $1,000,000. Each Person

5.3.3.2 Vehicle/Equip/ $1,000,000. Each Accident
Damage

5.3.3.3 Property Damage $1,000,000. Each Occurrence

5.3.4. The insurance required by this paragraph 5.3 shall include the specific coverages and be written for not less than the limits of liability and coverages provided herein, or required by law, whichever is greater. The comprehensive general liability insurance shall include completed operations insurance. All of the policies of insurance so required to be purchased and maintained (or the certificates or other evidence thereof) shall contain a provision or endorsement that the coverage afforded will not be canceled, materially changed or renewal refused until at least thirty days' prior written notice has been given to CITY and ENGINEER by certified mail. All such insurance shall remain in effect until final payment and at all times thereafter when CONTRACTOR may be correcting, removing or replacing *defective* WORK in accordance with paragraph 13.12.

5.3.5. In addition, CONTRACTOR shall maintain such completed operations insurance for at least two years after final payment and furnish CITY with evidence of continuation of such insurance at final payment and one year thereafter.

Contractual Liability Insurance:

5.4. The comprehensive general liability insurance required by paragraph 5.3 will include contractual liability insurance applicable to CONTRACTOR's obligations under paragraphs 6.30 and 6.31. The contractual liablity required shall provide coverage for not less than the following amounts or greater where required by law.

5.4.1 Bodily injury $1,000,000. Each Occurrence

5.4.2 Property Damage $1,000,000. Each Occurrence
including $1,000,000. Annual Aggregate
explosion, collapse
and underground coverages

Property Insurance:

5.5. This insurance shall include the interests of CITY, CONTRACTOR, Subcontractors, all of whom shall be listed as insureds or additional insured parties, shall insure against the perils of fire and extended coverages shall include "all risk" insurance for physical loss and damage including theft, vandalism and malicious mischief, collapse and water damage, and such other perils as required and shall include damages, losses and expenses arising out of or resulting from any insured property (including but not limited to fees and charges of engineers, architects, attorneys and other professionals). CONTRACTOR shall also purchase and maintain similar property insurance on portions of the work stored on and off the site or in transit when such portions of the Work are to be included in an Application for Payment.

5.5.1. Contractor shall purchase and maintain a separate Protective Liability policy on behalf of the City, issued at the expense of Contractor. The policy shall include the City, its officials and Engineer as named insured. This insurance shall provide coverage of not less than the following amounts:

5.5.1.1 Bodily Injury $1,000,000. Each Occurrence

5.5.1.2 Property Damage $1,000,000. Each Occurrence
incl. Explosion $1,000,000 Annual Aggregate
Collapse and Under-
Ground coverages

5.6. All the policies of insurance (or the certificates or other evidence thereof) required in accordance with paragraph 5.5 will contain a provision or endorsement that the coverage afforded will not be canceled or materially changed or renewal refused until at least thirty days' prior written notice has been given to CITY by certified mail and will contain waiver provisions in accordance with these General Conditions.

Waiver of Rights:

5.6. The CONTRACTOR shall waive all rights against the CITY for all loses and damages caused by any of the perils covered by the policies of insurance provided in response to the above paragraphs and any other property insurance applicable to the Work. As required by paragraph 6.11, each subcontract between CONTRACTOR and a Subcontractor will contain similar waiver provisions by the Subcontractor in favor of the CITY and all other parties named as insureds.

Acceptance of Insurance:

5.7. If CITY has any objection to the coverage afforded by or other provisions of the insurance required to be purchased and maintained by CONTRACTOR in accordance with this Article on the basis of its not complying with the Contract Documents, CITY will notify CONTRACTOR in writing thereof within ten days of the date of delivery of such certificates to CITY in accordance with paragraph 2.7. CONTRACTOR shall provide to the CITY such additional information in respect of insurance as may be reasonably requested. Failure to give any such notice of objection within the time provided shall constitute acceptance of such insurance purchased by CONTRACTOR as complying with the Contract Documents.

5.8. CONTRACTOR may purchase and maintain excess liability insurance in the umbrella form in order to satisfy the limits of liability required for the insurance to be purchased and maintained in accordance with this Article. Evidence of such excess liability shall be delivered to City in accordance with paragraph 2.7 in the form of a certificate indicating the policy numbers and limits of liability of all underlying insurance. The umbrella liability insurance shall have a combined single limit of not less than $5,000,000. Such insurance shall contain a provisions that the coverage afforded will not be canceled or materially changed until at least thirty days' prior written notice has been given to the City.

Partial Utilization - Property Insurance:

5.10 If CITY finds it necessary to occupy or use a portion or portions of the WORK prior to Substantial Completion of all the WORK, such use or occupancy may be accomplished in accordance with paragraph 14.10; provided that no such use or occupancy shall commence before the insurers providing the property insurance have acknowledged notice thereof and in writing effected the changes in coverage necessitated thereby. The insurers providing the property insurance shall consent by endorsement on the policy or policies, but the property insurance shall not be canceled or lapse on account of any such partial use or occupancy.

ARTICLE 6- CONTRACTOR'S RESPONSIBILITIES

Supervision and Superintendence:

6.1. CONTRACTOR shall supervisor and direct the WORK competently and efficiently, devoting such attention thereto and applying such skills and expertise as may be necessary to perform the WORK in accordance with the Contract Documents. CONTRACTOR shall be solely responsible for the means, methods, techniques, sequences and procedures of construction, but CONTRACTOR shall not be responsible for the negligence of others in the design or selection of a specific means, method, technique, sequence or procedure of construction which is indicated in and required by the Contract Documents. CONTRACTOR shall be responsible to see that the finished WORK complies accurately with the Contract Documents.

6.2. CONTRACTOR shall keep on the WORK at all times during its progress a competent resident superintendent, who shall not be replaced without written

notice to CITY and ENGINEER except under extraordinary circumstances. The superintendent will be CONTRACTOR's representative at the site and shall have authority to act on behalf of CONTRACTOR. All communications given to the superintendent shall be as binding as if given to CONTRACTOR.

Labor, Materials and Equipment:

6.3. CONTRACTOR shall provide competent, suitably qualified personnel to survey and lay out the WORK and perform construction as required by the Contract Documents. CONTRACTOR shall at all times maintain good discipline and order at the site. Except in connection with the safety or protection of persons or the WORK or property at the site or adjacent thereto, and except as otherwise indicated in the Contract Documents, all WORK at the site shall be performed during regular working hours, and CONTRACTOR will not permit overtime work or the performance of WORK on Saturday, Sunday or any legal holiday without CITY's written consent given after prior written notice to ENGINEER.

6.3.1 This Agreement is subject to the applicable provisions of the Contract Work Hours and Safety Standards Act, Public Law 87-581, 87th Congress. No Contractor or Subcontractor contracting for any part of the WORK shall require or permit any laborer or mechanic to be employed on the WORK in excess of eight (8) hours in any calendar day or in excess of forty (40) hours in any calendar week, unless such laborer or mechanic receives compensation at a rate of not less than one and one half (1-1/2) times his basic rate of pay for all hours worked in excess of eight (8) hours in any calendar day or in excess of forty (40) hours in any such work-week, as the case may be.

6.3.2 Except as may be otherwise required by law, all claims and disputes pertaining to the classification of labor employed on the project under this Contract shall be decided by CITY and/or other duly designated official(s).

6.3.3 CONTRACTOR shall employ only competent persons to do the WORK and whenever CITY shall notify CONTRACTOR in writing, that any person on the WORK appears to be incompetent, unfaithful, disorderly, or otherwise unsatisfactory, such person shall be removed from the Project and shall not again be employed on it except with the consent of CITY.

6.3.4 CONTRACTOR and Subcontractor shall, insofar as practicable, give preference in the hiring of workers for the Project to qualified local residents with first preference being given to citizens of the United States who have served in the armed forces of the United States and have been honorably discharges therefrom or released from active duty.

6.4. Unless otherwise specified in the General Requirements, CONTRACTOR shall furnish and assume full responsibility for all materials, equipment, labor, transportation, construction equipment and machinery, tools, appliances, fuel, power, light, heat, telephone, water, sanitary facilities, temporary facilities and all other facilities and incidentals necessary for the furnishing, performance, testing, start-up and completion of the WORK.

6.5. All materials and equipment shall be of good quality and new, except as otherwise provided in the Contract Documents. If required by ENGINEER, CONTRACTOR shall furnish satisfactory evidence (including reports of required tests) as to the kind and quality of materials and equipment. All materials and equipment shall be applied, installed, connected, erected, used, cleaned and conditioned in accordance with the instructions of the applicable Supplier except as otherwise provided in the Contract Documents, but no provision of any such instructions will be effective to assign to ENGINEER, or any ENGINEER's consultants, agents or employees, any duty or authority to supervise or direct the furnishing or performance of the WORK or any duty or authority to undertake responsibility contrary to the provisions of paragraph 9.15 or 9.16.

Adjusting Progress Schedule:

6.6. CONTRACTOR shall submit to ENGINEER for acceptance (to the extent indicated in paragraph 2.9) adjustments in the progress schedule to reflect the impact thereon of new developments; these will conform to the progress schedule then in effect and additionally will comply with any provisions of the General Requirements applicable thereto.

Substitutes or "Or-Equal" Items:

6.7.1. Whenever materials or equipment are specified or described in the Contract Documents by using the name of a proprietary item or the name of a particular Supplier the naming of the item is intended to establish the type, function and quality required. Unless the name is followed by words indicating that no substitution is permitted, materials or equipment of other Suppliers may be accepted by ENGINEER if sufficient information is submitted by CONTRACTOR to allow ENGINEER to determine that the material or equipment proposed is equivalent or equal to that named. The procedure for review by ENGINEER will include the following as supplemented in the General Requirements. Requests for review of substitute items of material and equipment will not be accepted by ENGINEER from anyone other than CONTRACTOR. If CONTRACTOR wishes to furnish or use a substitute item of material or equipment, CONTRACTOR shall make written application to ENGINEER for acceptance thereof, certifying that the proposed substitute will perform adequately the functions and achieve the results called for by the general design, be similar and of equal substance to that specified and be suited to the same use as that specified. The application will state that the evaluation and acceptance of the proposed substitute will not prejudice

CONTRACTOR's achievement of Substantial Completion on time, whether or not acceptance of the substitute for use in the WORK will require a change in any of the Contract Documents (or in the provisions of any other direct contract with CITY for work on the Project) to adapt the design to the proposed substitute and whether or not incorporation or use of the substitute in connection with the WORK is subject to payment of any license fee or royalty. All variations of the proposed substitute form that specified will be identified in the application and available maintenance, repair and replacement service will be indicated.. The application will also contain an itemized estimate of all costs that will result directly or indirectly from acceptance of such substitute, including costs of redesign and claims of other contractors affected by the resulting change, all of which shall be considered by ENGINEER in evaluating the proposed substitute. ENGINEER may require CONTRACTOR to furnish at CONTRACTOR's expense additional data about the proposed substitute.

6.7.2. If a specific means, method, technique, sequence or procedure of construction is indicated in or required by the Contract Documents, CONTRACTOR may furnish or utilize a substitute means, method, sequence, technique or procedure of construction acceptable to ENGINEER if CONTRACTOR submits sufficient information to allow ENGINEER to determine that the substitute proposed is equivalent to that indicated or required by the Contract Documents. The procedure for review by ENGINEER will be similar to that provided in paragraph 6.7.1 as applied by ENGINEER and as may be supplemented in the General Requirements.

6.7.3. ENGINEER will be allowed a reasonable time within which to evaluate each proposed substitute. ENGINEER will be the sole judge of acceptability, an no substitute will be orders, installed or utilized without ENGINEER's prior written acceptance which will be evidenced by either a Change Order or an approved Shop Drawing. CITY may require CONTRACTOR to furnish at CONTRACTOR's expense a special performance guarantee or other surety with respect to any substitute. ENGINEER will record time required by ENGINEER and ENGINEER's consultants in evaluating substitutions proposed by CONTRACTOR and in making changes in the Contract Documents occasioned thereby. CONTRACTOR shall reimburse CITY for the charges of ENGINEER and ENGINEER's consultants for evaluating each proposed substitute.

6.7.4 Whenever it is written that an equipment manufacturer must have a specified period of experience with its product/equipment, the product/equipment which does not meet the experience period can be considered if the equipment supplier/manufacturer is willing to provide an extended warranty along with a guarantee bond or cash deposit for the duration of the specified time period which will guarantee replacement of that equipment in the event of failure.

Concerning Subcontractors, Suppliers and Others:

6.8.1. CONTRACTOR shall not employ any Subcontractor, Supplier, or other person or organization (including those acceptable to City or ENGINEER as indicated in paragraph 6.8.2), whether initially or as a substitute, against whom CITY or ENGINEER may have a reasonable objection. CONTRACTOR shall not be required to employ any Subcontractor, Supplier or other person or organization to furnish or perform any of the Work against whom CONTRACTOR has reasonable objection.

6.8.2. If the CITY or its ENGINEER require the identity of certain Subcontractors, Suppliers or other persons or organizations (including those who are to furnish the principal items or materials or equipment) to be submitted to the CITY in advance of the specified date prior to the Effective date of the Agreement for acceptance by CITY and ENGINEER and if CONTRACTOR has submitted a list thereof in accordance with these General Conditions, CITY's or ENGINEER's acceptance (either in writing or by failing to make written objection thereto by the date indicated for acceptance or objection in the bidding documents or the Contract Documents) of any such Subcontractor, Supplier or other person or organization so identified may be revoked on the basis of reasonable objection after due investigation, in which case CONTRACTOR shall submit an acceptable substitute. No acceptance by CITY or ENGINEER of any such Subcontractor, Supplier or other person or organization shall constitute a waiver of any right of CITY or ENGINEER to reject *defective* Work.

6.9. CONTRACTOR shall be fully responsible to CITY and ENGINEER for all acts and omissions of the Subcontractors, Suppliers, and other persons and organizations performing or furnishing any of the WORK under a direct or indirect contract with CONTRACTOR just as CONTRACTOR is responsible for CONTRACTOR's own acts and omissions. Nothing in the Contract Documents shall create any contractual relationship between CITY or ENGINEER and any such Subcontractor, Supplier or other person or organization, nor shall it create any obligation on the part of CITY or ENGINEER to pay or to see to the payment of any moneys due any such Subcontractor, Supplier or other person or organization except as may otherwise be required by Laws and Regulations. (MGL c149 ss44F) CITY or ENGINEER may furnish to any such Subcontractor, Supplier or other person or organization to the extent practicable, evidence of amount paid on their behalf to CONTRACTOR in accordance with Contractor's Application for Payment.

6.10 The divisions and sections of the Specifications and the identifications of any Drawings shall not control CONTRACTOR in dividing the WORK among

Subcontractors or Suppliers or Delineating the WORK to be performed by any specific trade.

6.10.1. With the exception of the MBE/WBE Participation Requirements, the CONTRACTOR shall not award more than thirty percent (30%) of the remaining work (based on the remainder of the total contract price) to Subcontractor(s) without the prior approval by the CITY.

6.11. All WORK performed for CONTRACTOR by a Subcontractor will be pursuant to an appropriate agreement between CONTRACTOR and the Subcontractor which specifically binds the Subcontractor to the applicable terms and conditions of the Contract Documents for the benefit of CITY and ENGINEER and contains waiver provisions as required by paragraph 5.1. CONTRACTOR shall pay each Subcontractor a just share of any insurance monies received by CONTRACTOR on account of losses under policies issued pursuant to paragraph 5.5.

Patent Fees and Royalties:

6.12. CONTRACTOR shall pay all license fees and royalties and assume all costs incident to the use in the performance of the WORK or the incorporation in the WORK of any invention, design, process, product or device which is the subject of patent rights or copyrights held by others. If a particular inventions, design, process, product or device is specified in the Contract Documents for use in the performance of the WORK and if to the actual knowledge of CITY or ENGINEER its use is subject to patent rights or copyrights calling for the payment of any license fee or royalty to others, the existence of such rights shall be disclosed by CITY in the Contract Documents. CONTRACTOR shall indemnify and hold harmless CITY and ENGINEER and anyone directly or indirectly employed by either of them from and against all claims, damages, losses and expenses (including attorney's fees and court and arbitration costs) arising out of any infringement of patent rights or copyrights incident to the use in the performance of the WORK or resulting from the incorporation in the WORK of any invention, design, process, product or device not specified in the Contract Documents, and shall defend all such claims in connection with any alleged infringement of such rights.

Permits:

6.13. Unless otherwise provided, CONTRACTOR shall obtain and pay for all construction permits and licenses. CITY shall assist CONTRACTOR, when necessary, in obtaining such permits and licenses. CONTRACTOR shall pay all governmental charges and inspection fees necessary for the prosecution of the WORK, which are applicable at the time of opening of Bids, or if there are no Bids on the Effective Date of the Agreement. CONTRACTOR shall pay all charges of utility owners for connections to the WORK, and CITY shall pay all charges of such utility owners for capital costs related thereto such as plant investment fees.

Laws and Regulations:

6.14.1. CONTRACTOR shall give all notices and comply with all Laws and Regulations applicable to furnishing and performance of the WORK. Except where otherwise expressly required by applicable Laws and Regulations, neither CITY nor ENGINEER shall be responsible for monitoring CONTRACTOR'S compliance with any Laws or Regulations.

6.14.2. If CONTRACTOR observes that the Specifications or Drawings are at variance with any Laws or Regulations, CONTRACTOR shall give ENGINEER prompt written notice thereof, and any necessary changes will be authorized by one of the methods indicated in paragraph 3.4. If CONTRACTOR performs any WORK knowing or having reason to know that it is contrary to such Laws or Regulations, and without such notice to ENGINEER, CONTRACTOR shall bear all costs arising therefrom.

Taxes:

6.15. CONTRACTOR shall pay all sales, consumer, use and other similar taxes required to be paid by CONTRACTOR in accordance with the Laws and Regulations of the place of the Project which are applicable during the performance of the WORK.

The materials and supplies to be used in the WORK of the Contract are exempt from the Sales and Use Tax of the Commonwealth of Massachusetts. CONTRACTOR shall obtain the proper certificates, maintain the necessary records and otherwise comply with the requirements of M.G.L. Chapter 14 and the Acts of 1966 and any other amendments thereto.

Use of Premises:

6.16. The CITY shall assist the CONTRACTOR in identifying available sites (public or private) in the Project vicinity, which can be used as possible construction laydown areas. However, the CONTRACTOR shall be fully responsible to make its own arrangements (lease, rent, improvements, etc) with the property owners. Also, the CONTRACTOR shall confine construction equipment, the storage of materials and equipment and the operations of workers to the Project site and land and areas identified in and permitted by the Contract Documents and other land and areas permitted by Laws and Regulations, rights-of-way, permits and easements, and shall not unreasonably encumber the premises with construction equipment or other materials or equipment. CONTRACTOR shall assume full responsibility for any damage to any such land or area, or to the CITY or occupant thereof or of any land or areas continuous thereto, resulting from the performance of the WORK. Should any claim be made against CITY or

ENGINEER by any such CITY or occupant because of the performance of the WORK, CONTRACTOR shall promptly attempt to settle with such other party by agreement or otherwise resolve the claim by arbitration or at law. CONTRACTOR shall, to the fullest extent permitted by Laws and Regulations, indemnify and hold CITY and ENGINEER harmless from and against all claims, damages, losses and expenses (including, but not limited to, fees of engineer, architects, attorneys, and other professionals and court costs) arising directly, indirectly or consequentially out of any action, legal or equitable, brought by any such other party against CITY or ENGINEER to the extent based on a claim arising out of CONTRACTOR's performance of the WORK.

6.17. During the progress of the WORK, CONTRACTOR shall keep the premises free from accumulations of waste materials, rubbish and other debris resulting from the WORK. At the completion of the Work, CONTRACTOR shall remove all waste materials, rubbish and debris from and about the premises as well as all tools, appliances, construction equipment and machinery, and surplus materials and shall leave the site clean and ready for occupancy by property owners. CONTRACTOR shall restore to original condition all property, indemnify the CITY and honor all agreements with property owner(s).

6.18. CONTRACTOR shall not load nor permit any part of any structure to be loaded in any manner that will endanger the structure, nor shall CONTRACTOR subject any part of the WORK or adjacent property to stresses or pressures that will endanger it.

Record Documents:

6.19. CONTRACTOR shall maintain in a safe place at the site one record copy of all Drawings, Specifications, addenda, Written Amendments, Change Orders, Work Directive Changes, Field Orders, project schedules, contract correspondence and written interpretations and clarifications (issued pursuant to paragraph 9.4) in good order and annotated to show all changes made during construction. These record documents together with all approved samples and a counterpart of all approved Shop Drawings will be available to ENGINEER for reference. Upon completion of the WORK, these record documents, samples and Shop Drawings will be delivered to ENGINEER for CITY.

Safety and Protection:

6.20. CONTRACTOR shall be responsible for initiating, maintaining and supervising all safety precautions and programs in connection with the WORK. CONTRACTOR shall take all necessary precautions for the safety of, and shall provide the necessary protection to prevent damage, injury or loss to:

6.20.1. all employees on the WORK and other persons and organizations who may be affected thereby:

6.20.2. all the WORK and materials and equipment to be incorporated therein, whether in storage on or off the site; and

6.20.3 other property at the site or adjacent thereto, including trees, shrubs, lawns, walks, pavements, roadways, structures, utilities and Underground Facilities not designated for removal, relocation or replacement in the course of construction.

CONTRACTOR shall comply will all applicable Laws and Regulations of any public body having jurisdiction for the safety of persons or property or to protect them from damage, injury or loss; and shall erect and maintain all necessary safeguards for such safety and protection. CONTRACTOR shall notify owner of adjacent property and of Underground Facilities and utility CITYs when prosecution of the WORK may affect them, and shall cooperate with them in the protection, removal, relocation and replacement of their property. All damage, injury or loss to any property referred to in paragraph 6.20.2 or 6.20.3 caused, directly or indirectly, in whole or in part, by CONTRACTOR, any Subcontractor, Supplier or any other person or organization directly or indirectly employed by any of them to perform or furnish any of the WORK or anyone for whose acts any of them may be liable, shall be remedied by CONTRACTOR. CONTRACTOR's duties and responsibilities for the safety and protection of the WORK shall continue until such time as all the WORK is completed and ENGINEER has issued a notice to CITY and CONTRACTOR in accordance with paragraph 14.13 that the WORK is acceptable (except as otherwise expressly provided in connection with Substantial Completion).

6.21. CONTRACTOR shall designate a responsible representative at the site whose duty shall be the prevention of accidents. This person shall be CONTRACTOR's superintendent unless otherwise designated in writing by CONTRACTOR.

6.21.1. In the event of temporary suspension of the WORK, or during inclement weather, or whenever ENGINEER may direct, CONTRACTOR shall, and cause Subcontractors to protect carefully the WORK and materials against damage or injury from the weather. If, in the opinion of the ENGINEER, any portion of the WORK or materials shall have been damaged or injured by reason of failure on the part of the CONTRACTOR or any Subcontractors to so protect the WORK, such WORK and materials shall be removed and replaced at the expense of the CONTRACTOR.

Emergencies:

6.22. In emergencies affecting the safety or protection of persons or the WORK or property at the site or adjacent thereto, CONTRACTOR, without special instruction or authorization from ENGINEER or CITY, is obligated to

act to prevent threatened damage, injury or loss. CONTRACTOR shall give ENGINEER prompt written notice if CONTRACTOR believes that any significant changes in the WORK or variations from the Contract Documents have been caused thereby. If ENGINEER determines that a change int he Contract Documents is required because of the action taken in response to an emergency, a Work Directive Change or Change Order will be issued to document the consequences of the changes or variations.

Shop Drawings and Samples:

6.23. After checking and verifying all field measurements and after complying with applicable procedures specified in the General Requirements, CONTRACTOR shall submit to ENGINEER for review and approval in accordance with the accepted schedule of Shop Drawing submissions (see paragraph 2.9), or for other appropriate action, four copies (unless otherwise specified in the General Requirements) of all Shop Drawings, which will bear a stamp or specific written indication that CONTRACTOR has satisfied CONTRACTOR's responsibilities under the Contract Documents with respect to the review of the submission. All submissions will be identified as ENGINEER may require. The data shown on the Shop Drawings will be complete with respect to quantities, dimensions, specified performance and design criteria, materials and similar data to enable ENGINEER to review the information as required.

6.24. CONTRACTOR shall also submit to ENGINEER for review and approval with such promptness as to cause no delay in WORK, all samples required by the Contract Documents. All samples will have been checked by and accompanied by a specific written indication that CONTRACTOR has satisfied CONTRACTOR's responsibilities under the Contract Documents with respect to the review of the submission and will be identified clearly as to material, Supplier, pertinent data such as catalog numbers, and the use for which intended.

6.25. Before submission of each Shop Drawing or sample CONTRACTOR shall have determined and verified all quantities, dimensions, specified performance criteria, installation requirements, materials, catalog numbers and similar data with respect thereto and reviewed or coordinated each Shop Drawings or sample with other Shop Drawings and samples and with the requirements of the WORK and the Contract Documents.

6.25.1. At the time of each submission, CONTRACTOR shall give ENGINEER specific written notice of each deviation and/or variation that the Shop Drawings, equipment, or samples may have from the requirements of the Contract Documents, and, in addition, shall cause a specific notation to be made on each Shop Drawing submitted to ENGINEER for review and approval of each such variation.

6.26. ENGINEER's review and approval of Shop Drawings or samples shall not relieve CONTRACTOR from responsibility for any variation form the requirements of the Contract Documents unless CONTRACTOR has in writing called ENGINEER's attention to each such variation at the time of submission as required by paragraph 6.25. and ENGINEER has given written approval of each such variation by a specific written notation thereof incorporated in or accompanying the Shop Drawing or sample approval; nor will any approval by ENGINEER relieve CONTRACTOR from responsibility for errors or omissions in the Shop Drawings or from responsibility for having complied with the provision of paragraph 6.25.1.

6.27. Where a Shop Drawing or sample is required by the Specifications, any related WORK performed prior to ENGINEER's review and approval of the pertinent submission will be the sole responsibility of CONTRACTOR.

Continuing the Work:

6.28. CONTRACTOR shall carry on the WORK and adhere to the progress schedule during all disputes or disagreements with CITY. No WORK shall be delayed or postponed pending resolution of any disputes or disagreements, except as permitted by paragraph 15.5 or as CONTRACTOR and CITY may otherwise agree in writing.

Indemnification:

6.29. To the fullest extent permitted by Laws and Regulations CONTRACTOR shall indemnify and hold harmless CITY and ENGINEER and their consultants, agents, and employees from and against all claims, damages, losses and expenses, direct, indirect or consequential (including but not limited to fees and charges of engineers, architects, attorneys and other professionals and court costs) arising out of or resulting from the performance of the WORK, provided that any such claim, damage, loss or expense (a) is attributable to bodily injury, sickness, disease or death, or to injury to or destruction of tangible property therefrom and (b) is caused in whole or in part by any negligent act or omission of CONTRACTOR, any Subcontractor, any person or organization directly or indirectly employed by any of them to perform or furnish any of the WORK or anyone for whose acts any of them may be liable, regardless of whether or not it is caused in part by a party indemnified hereunder or arises by or is imposed by Law and Regulations regardless of the negligence of any such party.

6.30 If, through acts of neglect on the part of CONTRACTOR, any other Contractor or Subcontractor shall suffer loss or damage on the Work, CONTRACTOR shall settle with such other Contractor or Subcontractor by agreement or arbitration. If such other Contractor or Subcontractor shall assert any claim against CITY on such

account of any damage alleged to have been sustained, CITY shall notify CONTRACTOR, who shall indemnify and save harmless CITY against such claim.

6.31. In any and all claims against CITY or ENGINEER or any of their consultants, agents or employees by any employee of CONTRACTOR, any Subcontractor, any person or organization directly or indirectly employed by any of them to perform or furnish any of the WORK or anyone for whose acts any of them may be liable, the indemnification obligation under paragraph 6.29 shall not be limited in any way by any limitation on the amount or type of damages, compensation or benefits payable by or for CONTRACTOR or any such Subcontractor or other person or organization under workers' or workmen's compensation acts, disability benefit acts or other employee benefit acts.

6.32. The obligation of CONTRACTOR under paragraphs 6.29 and 6.30 shall not extend to the liability of ENGINEER, ENGINEER's consultants, agents or employees arising out of the preparation or approval of maps, drawings, opinions, reports, surveys, Change Orders, designs or specifications.

6.33 CONTRACTOR shall comply with all applicable provisions of Chapter 30, Section 39R of the Mass. General Laws regarding CONTRACTOR's records.

ARTICLE 7 - OTHER WORK

Related Work at Site:

7.1. CITY may perform other work related to the Project at the site by CITY's own forces, have other work performed by utility CITYs or let other direct contracts therefor which shall contain General Conditions similar to these. If the fact that such other work is to be performed was not noted in the Contract Documents, written notice thereof will be given to CONTRACTOR prior to starting any such other work; and, if CONTRACTOR believes that such performance will involve additional expense to CONTRACTOR or requires additional time and the parties are unable to agree as to the extent thereof, CONTRACTOR may make a claim therefor as provided in Articles 11 and 12.

7.2. CONTRACTOR shall afford each utility, CITY and other contractor who is a party to such a direct contractor (or CITY, if CITY is performing the additional work with CITY's employees) proper and safe access to the site and a reasonable opportunity for the introduction and storage of materials and equipment and the execution of such work, and shall properly connect and coordinate the WORK with others.

7.2.1. CONTRACTOR shall do all cutting, fitting and patching of the WORK that may be required to make its several parts come together properly and integrate with such other work. CONTRACTOR shall not endanger any work of others by cutting, excavating or otherwise altering their work and will only cut or alter their work with the written consent of ENGINEER and the others whose work will be affected.

7.2.2 The duties and responsibilities of CONTRACTOR under this paragraph are for the benefit of such utility CITYs and other contractors to the extent that there are comparable provisions for the benefit of CONTRACTOR in said direct contracts between CITY and such utility CITYs and other contractors.

7.3. If any part of CONTRACTOR's WORK depends for proper execution or results upon the work of any such other contractor or utility owner (or CITY), CONTRACTOR shall inspect and promptly report to ENGINEER in writing any delays, defects or deficiencies I such work that render it unavailable or unsuitable for such proper execution and results. CONTRACTOR's failure to report will constitute an acceptance of the other work as fit and proper for integration with CONTRACTOR's WORK except for latent or non-apparent defects and deficiencies in other work.

Coordination:

7.4. If CITY contracts with others for the performance of other work on the Project at the site, the person or organization who will have authority and responsibility for coordination of the activities among the various prime contractors will be identified, and the specific matters to be covered by such authority and responsibility will be itemized, and the extent of such authority and responsibilities will be provided, in the Supplementary Conditions. Unless otherwise provided, neither CITY nor ENGINEER shall have any authority or responsibility in respect of such coordination.

ARTICLE 8 - CITY'S RESPONSIBILITIES

8.1. CITY shall issue all communications to CONTRACTOR through ENGINEER.

8.2. In case of termination of the employment of ENGINEER, CITY shall appoint an engineer against whom CONTRACTOR makes no reasonable objection, whose status under the Contract Documents shall be that of the former ENGINEER. Any dispute in connection with such appointment shall be settled *through legal proceedings*.

8.3. CITY shall furnish the data required of CITY under the Contract Documents promptly and shall make payments to CONTRACTOR promptly after they are due as provided in paragraphs 14.4 and 14.13.

8.4. CITY's duties in respect of providing lands and easements and providing engineering surveys to establish reference points are set forth in paragraphs 4.1 and 4.4. Paragraph 4.2 refers to CITY's identifying and making

available to CONTRACTOR copies of reports of explorations and tests of subsurface conditions at the site and in existing structures which have been utilized by ENGINEER in preparing the Drawings and Specifications.

8.5 CITY is obligated to execute Change Orders as indicated in paragraph 10.4.

8.6. CITY's responsibility in respect of certain inspections, tests and approvals is set forth in paragraph 13.4.

8.7. In connection with CITY's right to stop WORK or suspend WORK, see paragraphs 13.10 and 15.1. Paragraph 15.2 deals with CITY's right to terminate services of CONTRACTOR under certain circumstances.

ARTICLE 9 - ENGINEER'S STATUS DURING CONSTRUCTION

9.1 ENGINEER will be the CITY's representative during the construction period. The duties and responsibilities and the limitations of authority of ENGINEER as CITY's representative during construction are set forth in the Contract Documents and shall not be extended without written consent of CITY and ENGINEER.

Visits to Site:

9.2. ENGINEER will make visits to the site at intervals appropriate to the various stages of construction to observe the progress and quality of the executed WORK and to determine, in general, if the WORK is proceeding in accordance with the Contract Documents. ENGINEER will not be required to make exhaustive or continuous on-site inspections to check the quality or quantity of the WORK. ENGINEER's efforts will be directed toward providing for CITY a greater degree of confidence that the completed WORK will conform to the Contract Documents. On the basis of such visits and on-site observations as an experienced and qualified design professional, ENGINEER will keep CITY informed of the progress of the WORK and will endeavor to guard CITY against defects and deficiencies in the WORK.

Project Representation:

9.3. If CITY and ENGINEER agree, ENGINEER will furnish a Resident Project Representative to assist ENGINEER in observing the performance of the WORK. The duties, responsibilities and limitations of authority of any such Resident Project Representative and assistants will be as provided in the Contract Documents. If CITY designates another agent to represent CITY at the site who is not ENGINEER's agent or employee, the duties, responsibilities and limitations of authority of such other person will also be as provided in the Contract Documents.

Clarifications and interpretations:

9.4. ENGINEER will issue with reasonable promptness such written clarifications or interpretations of the requirements of the Contract Documents (in the form of Drawings or otherwise) as ENGINEER may determine necessary, which shall be consistent with or reasonably inferable from the overall intent of the Contract Documents. If CONTRACTOR believes that a written clarification or interpretation justifies an increase in the Contract Price, or an extension of the Contract Time and the parties are unable to agree to the amount or extent thereof, CONTRACTOR may make a claim therefor as provided in Article 11 or Article 12.

9.4.1. ENGINEER's interpretations will be made in accordance with MGL, C.30, s. 39P.

Authorized Variations in Work:

9.5. ENGINEER may authorize minor variations in the WORK from the requirements of the Contract Documents which do not involve an adjustment in the Contract Price or the Contract Time and are consistent with the overall intent of the Contract Documents. These may be accomplished be a Field Order and will be binding on CITY, and also on CONTRACTOR who shall perform the WORK involved promptly. If CONTRACTOR believes that a Field Order justifies an increase in the Contract Price or an extension of the Contract Time and the parties are unable to agree as to the amount or extent thereof, CONTRACTOR may make a claim therefor as provided in Article 11 or 12.

Rejecting Defective Work:

9.6. ENGINEER will have authority to disapprove or reject WORK which ENGINEER believes to be *defective*, and will also have authority to require special inspections or testing of the WORK as provided in paragraph 13.9, whether or not the WORK is fabricated, installed or completed.

Shop Drawings, Change Orders and Payments:

9.7. In connection with ENGINEER's responsibility for Shop Drawings and samples, see paragraphs 6.23 through 6.29 inclusive.

9.8. In connection with ENGINEER's responsibilities as to Change Orders, see Articles 10, 11 and 12.

9.9. In connection with ENGINEER's responsibilities in respect of Applications for Payment, etc., see Article 14.

Determinations for Unit Prices:

9.10. ENGINEER will determine the actual quantities and classifications of Unit Price Work performed by CONTRACTOR. ENGINEER will review with CONTRACTOR ENGINEER's preliminary determinations

on such matters before rendering a written decision thereon (by recommendation of an Application for Payment or otherwise). ENGINEER's written decision thereon will be final and binding upon CITY and CONTRACTOR, unless, within ten days after the date of any such decision, either CITY or CONTRACTOR delivers to the other party to the Agreement and to ENGINEER written notice of intention to appeal from such a decision.

Decisions on Disputes:

9.11. ENGINEER will be the initial interpreter of the requirements of the Contract Documents and judge of acceptability of the WORK thereunder. Claims, disputes and other matters relating to the acceptability of the WORK or the interpretation of the requirements of the Contract Documents pertaining to the performance and furnishing of the WORK and claims under Articles 11 and 12 in respect of changes in the Contract Price or Contract Time will be referred initially to ENGINEER in writing with a request for a formal decision in accordance with this paragraphs, which ENGINEER will render in writing within a reasonable time. Written notice of each such claim, dispute and other matter will be delivered by the claimant to ENGINEER and the other party to the Agreement promptly (but in no event later than thirty days) after the occurrence of the event giving rise thereto, and written supporting data will be submitted to ENGINEER and the other party within sixty days after such occurrence unless ENGINEER allows an additional period of time to ascertain more accurate data in support of the claim.

9.12. When functioning as interpreter and judge under paragraphs 9.10 and 9.11, ENGINEER will not show partiality to CITY or CONTRACTOR and will not be liable in connection with any interpretation or decision rendered in good faith in such capacity. The rendering of a decision by ENGINEER pursuant to paragraphs 9.10 and 9.11 with respect to any such claim, dispute or other matter (except any which have been waived by the making or acceptance of final payments as provided in paragraph 14.16) will be a condition precedent to any exercise by CITY or CONTRACTOR of such rights or remedies as either may otherwise have under the Contract Documents or by Laws and Regulations in respect of any such claim, dispute or other matter.

Limitations on ENGINEER's Responsibilities:

9.13. Neither ENGINEER's authority to act under this Article 9 or elsewhere in the Contract Documents nor any decision made by ENGINEER in good faith either to exercise or not exercise such authority shall give rise to any duty or responsibility of ENGINEER to CONTRACTOR, any Subcontractor, any Supplier, or any other person or organization performing any of the Work, or to any surety for any of them.

9.14. Whenever in the Contract Documents the terms "as ordered", "as directed", "as required", "as allowed", "as approved", or terms of like effect or import are used, or the adjectives "reasonable", "suitable", "acceptable", "proper", or "satisfactory" or adjectives of like effect or import are used to describe a requirements, direction, review or judgment of ENGINEER as to the WORK, it is intended that such requirements, direction, review or judgment will be solely to evaluate the WORK for compliance with the Contract Documents (unless there is a specific statement indicating otherwise). The use of any such term or adjective shall not be effective to assign to ENGINEER any duty or authority to supervise or direct the furnishing or performance of the Work or any duty or authority to undertake responsibility contrary to the provisions of paragraph 9.15 or 9.16.

9.15. ENGINEER will not be responsible for CONTRACTOR's means, methods, techniques, sequence or procedures of construction, or the safety precautions and programs incident thereto, and ENGINEER will not be responsible for CONTRACTOR's failure to perform or furnish the Work in accordance with the Contract Documents.

9.16. ENGINEER will not be responsible for the acts or omissions of CONTRACTOR or of any Subcontractor, any Supplier, or of any other person or organization performing or furnishing any of the Work.

ARTICLE 10 - CHANGES IN THE WORK

10.1. Without invalidating the Agreement and without notice to any surety, CITY may, at any time or from time to time, order additions, deletions or revisions in the WORK; these will be authorized by a Written Amendment, a Change Order, or a Work Directive Change. Upon receipt of any such document, CONTRACTOR shall promptly proceed with the WORK involved which will be performed under the applicable conditions of the Contract Documents (except as otherwise specifically provided).

10.2. If CITY and CONTRACTOR are unable to agree as to the extent, if any, of an increase or decrease in the Contract Price or an extension or shortening of the Contract Time that should be allowed as a result of a Work Directive Change, a claim may be made therefor as provided in Article 11 or Article 12.

10.3. CONTRACTOR shall not be entitled to an increase in the Contract Price or an extension of the Contract Time with respect to any WORK performed that is not required by the Contract Documents as amended, modified and supplemented as provided in paragraphs 3.4 and 3.5, except in the case of an emergency as provided in paragraph 6.22 and except in the case of uncovering WORK as provided in paragraph 13.9.

10.4. CITY and CONTRACTOR shall execute appropriate Change Orders (or Written Amendments) on forms to be supplied by the City. The City shall not accept any other form. The form shall cover:

Change Orders will be completed by the Contracting using the form enclosed on the following page(s). The City will not accept any other form as a substitute.

10.4.1. changes in the WORK which are ordered by CITY pursuant to paragraph 10.1, are required because of acceptance of *defective* WORK under paragraph 13.13 or correcting *defective* WORK under paragraph 13.14, or are agreed to by the parties;

10.4.2. changes in the Contract Price or Contract Time which are agreed to by the parties; and

10.4.3. changes in the Contract Price or Contract Time which embody the substance of any written decision rendered by ENGINEER pursuant to paragraph 9.11; provided that, in lieu of executing any such Change Order, an appeal may betaken from any such decision in accordance with the provision of the Contract Documents and applicable Laws and Regulations, but during any such appeal, CONTRACTOR shall carry on the WORK and adhere to the progress schedule as provided in paragraph 6.28.

10.5. If notice of change affecting the general scope of the WORK or the provision of the Contract Documents (including, but not limited to, Contract Price or Contract Time) is required by the provision of any Bond to be given to a surety, the giving of any such notice will be CONTRACTOR's responsibility, and the amount of each applicable Bond will be adjusted accordingly.

ARTICLE 11 - CHANGE OF CONTRACT PRICE

11.1. The Contract Price constitutes the total compensation (subject to authorized adjustments) payable to CONTRACTOR for performing the WORK. All duties, responsibilities and obligations assigned to or undertaken by CONTRACTOR shall be at its expense without change in the Contract Price.

11.2. The Contract Price may only be changed by a Change Order or by a Written Amendment. Any claim for an increase or decrease in the Contract Price shall be based on written notice delivered by the party making the claim to the other party and to ENGINEER promptly (but in no event later than thirty days) after the occurrence of the event giving rise to the claim and stating the general nature of the claim.

11.3. Notice of the amount of the claim with supporting data shall be delivered within sixty days after such occurrence (unless ENGINEER allows an addition period of time to ascertain more accurate data in support of the claim) and shall be accompanied by claimant's written statement that the amount claimed covers all known amounts (direct, indirect and consequential) to which the claimant is entitled as a result of the occurrence of said event. All claims for adjustment in the Contract Price shall be determined by ENGINEER in accordance with paragraph 9.11 if CITY and CONTRACTOR cannot otherwise agree on the amount involved. No claim for an adjustment in the Contract Price will be valid if not submitted in accordance with this paragraph 11.2.

Cost of the Work:

11.4. The term Cost of the Work means the sum of all costs necessarily incurred and paid by CONTRACTOR in the proper performance of the Work. Except as otherwise may be agreed to in writing by CITY, such costs shall be in amounts no higher than those prevailing in the locality of the Project, shall include only the following items and shall not include any of the costs itemized in paragraph 11.5.

11.4.1. Payroll costs for employees in the direct employ of CONTRACTOR in the performance of the Work under schedules of job classifications agreed upon by CITY and CONTRACTOR. Payroll costs for employees not employed full time on the Work shall be apportioned on the basis of their time spent on the Work. Payroll costs shall include, but not be limited to, salaries and wages plus the cost of fringe benefits which shall include social security contributions, unemployment, excise and payroll taxes, workers' or workmen's compensation, health and retirement benefits, bonuses, sick leave, vacation and holiday pay applicable thereto. Such employees shall include the foremen at the site. The expenses of performing Work after regular working hours, on Saturday, Sunday or legal holidays, shall be included in the above to the extent authorized by CITY.

11.4.2. Cost of all materials and equipment furnished and incorporated in the Work, including costs of transportation and storage thereof, and Suppliers' field services required in connection therewith. All cash discounts shall accrue to CONTRACTOR unless CITY deposits funds with CONTRACTOR with which to make payments, in which case the cash discounts shall accrue to CITY. All trade discounts, rebates and refunds and all returns from sale of surplus materials and equipment shall accrue to CITY, and CONTRACTOR shall make provisions so that they may be obtained.

11.4.3. Payments made by CONTRACTOR to the Subcontractors for Work performed by Subcontractors shall be as per the subcontract bid schedule as agreed between the CONTRACTOR and the Subcontractors. The Subcontractor could be the specialty contractors, MBEs/WBEs, technical services providers, attorneys, accountants, employed specifically for the project

All subcontracts shall be subject to the other provisions of the Contract Documents insofar as applicable.

11.4.4. Costs of special consultants (including but not limited to engineers, architects, testing laboratories, surveyors, attorneys and accountants) employed for services specifically related to the Work.

11.4.5. The following are supplemental costs that may be applicable to change order work.

11.4.5.1. The proportion of necessary transportation, travel, and subsistence expenses of CONTRACTOR's employees incurred in the discharge of duties connected with the Work.

11.4.5.2. Cost, including transportation and maintenance, of all materials, supplies, equipment, machinery, appliances, office and temporary facilities at the site and hand tools not owned by the workers, which are consumed in the performance of the Work, and cost less market value of such items used but not consumed which remain the property of CONTRACTOR.

11.4.5.3. Rentals of all construction equipment and machinery and the parts thereof whether rented from CONTRACTOR or others in accordance with rental agreements approved by CITY with the advice of ENGINEER, and the costs of transportation, loading, unloading, installation, dismantling and removal thereof - all in accordance with terms of said rental agreements. The rental of any such equipment, machinery or parts shall cease when the use thereof is no longer necessary for the Work.

11.4.5.4. Deposits lost for causes other than negligence of CONTRACTOR, royalty payments and fees for permits and licenses.

11.4.5.5. Losses and damages (and related expenses), to the Work or otherwise sustained by CONTRACTOR in connection with the performance and furnishing of the Work, provided they have resulted from causes other than the negligence of CONTRACTOR. Such losses shall include settlements made with the written consent and approval of CITY. No such losses, damages and expenses shall be included in the Cost of the WORK for the purpose of determining CONTRACTOR's Fee. If, however, any such loss or damage requires reconstruction and CONTRACTOR is placed in charge thereof, CONTRACTOR shall be paid for services a fee proportionate to that stated in paragraph 11.6.1.

11.4.5.6. The cost of utilities, fuel and sanitary facilities at the site.

11.4.5.7. Minor expenses such as telegrams, long distance telephone calls, telephone service at the site, expressage and similar petty cash items in connection with the Work.

11.4.5.8. Costs of premiums for additional bonds and insurance required because of changes in the Work shall be in accordance with paragraph 5.1 and 5.3.

11.5. The term Cost of the Work shall not include any of the following:

11.5.1. Payroll costs and other compensation of CONTRACTOR's officers, executives, principals (of partnership and sole proprietorships), general managers, engineers, architects, estimators, attorneys, auditors, accountants, purchasing and contracting agents, expeditors, timekeepers, clerks and other personnel employed by CONTRACTOR whether at the site or in the CONTRACTOR's principal or a branch office for general administration of the WORK and not specifically included in the agreed upon schedule of job classifications referred to in paragraph 11.4.1 or specifically covered by paragraph 11.4.4 - all of which are to be considered administrative costs covered by the CONTRACTOR's Fee.

11.5.2. Expenses of CONTRACTOR's principal and branch offices other than CONTRACTOR's office at the site.

11.5.3. Any part of CONTRACTOR's capital expenses, including interest on CONTRACTOR'S capital employed for the WORK and charges against CONTRACTOR for delinquent payments.

11.5.4. Cost of premiums for all Bonds and for all insurance whether or not CONTRACTOR is required by the Contract Documents to purchase and maintain the same (except for the cost of premiums covered by subparagraph 11.4.5.8 above).

11.5.5. Costs due to the negligence of CONTRACTOR, any Subcontractor, or anyone directly or indirectly employed by any of them or for whose acts any of them may be liable, including but not limited to, the correction of *defective* Work, disposal of materials or equipment wrongly supplied and making good any damage to property.

11.5.6. Other overhead or general expense costs of any kind and the costs of any item not specifically and expressly included in paragraph 11.4.

CONTRACTOR's Fee:

11.6. The CONTRACTOR's Fee allowed to CONTRACTOR for overhead and profit shall be determined as follows:

11.6.1. a fee based on the following percentages of the various portions of the Cost of the Work:

11.6.1.1. for costs incurred under paragraphs 11.4.1, 11.4.2, 11.4.5.3, and 11.4.5.9 of the CONTRACTOR's Fee shall be fifteen (15%) percent;

11.6.1.2. for costs incurred under paragraph 11.4.3, the CONTRACTOR's Fee shall be five percent (5%); based on the Subcontractor's cost of the Work; and if a subcontract is on the basis of Cost of the Work Plus a Fee, the maximum allowable to CONTRACTOR on account of

overhead and profit of all Subcontractors shall be fifteen percent (15%);

11.6.1.3. No fee shall be payable on the basis of costs itemized under paragraphs 11.4.4, and 11.4.5, except as noted above and paragraph 11.5 below;

11.6.1.4. the amount of credit to be allowed by CONTRACTOR to CITY for any such change which results in a net decrease in cost will be the amount of the actual net decrease plus a deduction in CONTRACTOR's Fee by an amount equal to ten percent of the net decrease; and

11.6.1.5. when both additions and credits are involved in any one change, the adjustments in CONTRACTOR's Fee shall be computed on the basis of the net change in accordance with paragraphs 11.6.1.1 through 11.6.1.4, inclusive.

11.7. Whenever the cost of any WORK is to be determined pursuant to paragraph 11.4 or 11.5, CONTRACTOR will submit in form acceptable to ENGINEER an itemized cost breakdown together with supporting data.

Unit Price Work:

11.8.1. Where the Contract Documents provide that all or part of the WORK is to be Unit Price Work, initially the Contract Price will be deemed to include for all Unit Price Work an amount equal to the sum of the established unit prices for each separately identified item of Unit Price Work times the estimated quantity of each item as indicated in the Agreement. The estimated quantities of items of Unit Price Work are not guaranteed and are solely for the purpose of comparison of Bids and determining an initial Contract Price. Determinations of the actual quantities and classifications of Unit Price Work performed by CONTRACTOR will be made by ENGINEER in accordance with paragraph 9.10.

11.8.2. Each unit price will be deemed to include an amount considered by CONTRACTOR to be adequate to cover CONTRACTOR's overhead and profit for each separately identified item.

11.8.3. Where the quantity of an item of Unit Price Work performed by CONTRACTOR differs materially and significantly from the estimated quantity of such time indicated in the Agreement and there is no corresponding adjustment with respect to any other item of WORK and if CONTRACTOR believes that CONTRACTOR had incurred additional expenses as a result thereof, CONTRACTOR may make a claim for an increase in the Contract Price in accordance with Article 11 if the parties are unable to agree as to the amount of any such increase.

Change Orders

11.9. The word Change Order, as used herein, shall be understood to cover all additions and deletions in the original scope of work, changes in the time schedules and other claims related to design, construction methods, materials, workmanship and performance, etc. under the contract.

11.9.1. Change orders, as used herein, shall include all extra work in relation to labor, materials, equipment and/or services, Supplemental Agreement or any other phrase used to identify a change to a contract

11.9.2. Change orders submitted for review and processing must be prepared on the attached Change Order Form (See attachment A) with the appropriate number of copies (same number as contracts executed), calculation sheet(s) and other supporting documentation necessary for evaluation. Failure to comply with these instructions will result in delays in processing the change order.

11.9.3. M.G.L. c.44, s.31C requires that the City Auditor certify that adequate funding in an amount sufficient to cover the total cost of the change order has been made available. Change orders will not be processed/approved until this certification is made on the face of the Change Order Form.

11.9.4. The value of any WORK covered by a Change Order or of any claim for an increase or decrease in the Contract Price shall be determined using on of the three methods described under paragraph 11.9.5.

11.9.5. Payment of all change orders shall be in accordance with the relavant provision of M.G.L., Chapter 30, Section 39G, as amended from time to time. Payment of change orders can, subject to the approval of the City, be made by one of the following three methods:

11.9.5.1. Existing unit prices as set forth in the contract;

11.9.5.2. Agreed upon lump sum or unit prices; or

11.9.5.3. Time and materials

11.9.6. Where the contract contains a unit price for work and the Engineer orders a change for work of the same kind as other work contained in the contract and is performed under similar physical conditions, the contract unit price(s) for the acceptable quantities shall prevail, subject to the provisions of paragraphs 11.8.1 through 11.8.3.

11.9.7. If the Engineer directs, the Contractor shall submit promptly in writing to the Engineer an offer to do the required work in a lump sum or unit price basis, as specified by the Engineer. The stated price, including the Contractor's fee under paragraph 11.6, either lump sum or unit price, shall be developed so as to show that it is the sum of:

11.9.7.1. Direct Labor cost, plus
11.9.7.2. Material and Freight Costs, plus
11.9.7.3 Equipment Costs, plus an amount not to an amount not to exceed 15% of the sum of items (1) through (4) for overhead and profit, plus (if applicable),
11.9.7.4. In the case of work done by a subcontractor an amount not to exceed 5%, for the general contractor of the sum of items (1) through (4) for his overhead and profit, less, if applicable,
11.9.7.4 Credits for work deleted from the contract.

11.9.8 Unless an agreed lump sum and/or a unit price is obtained, the Contractor shall be paid on the basis of the cost of the work determined as provided under paragraphs 11.6 and 11.7, as applicable. The total amount shall be developed and shown as below.

11.9.8.1 The estimated cost of labor, plus
11.9.8.2 The Director Labor Costs, plus
11.9.8.3 Equipment Costs, plus
11.9.8.4 Materials and Freight Costs, plus
11.9.8.5 An amount not to exceed 15% of the sum of items (1) through (4) or overhead and profit, Plus, if applicable,
11.9.8.6. In the case of work done by a subcontractor, an amount not to exceed 5% for the general contractor of the sum of items (1) through (4) for his overhead and profit, less, if applicable, credit for work deleted from the contract.

Definitions

11.10. The terms used herein in the context of the Change Order work shall be understood to mean as noted below:

11.10.1 *Labor* – Only those workers employed on the project who are doing the extra work, including the foreman in charge are allowable. General foremen, superintendents, or other supervisory personnel are considered to be included in the overhead markup as provided under paragraph 11.3.2., 11.3.3 and 11.3.5. Hourly labor rates in excess of those listed in the contract wage rates (Federal or State, whichever is applicable) require documentation. As a minimum, an explanation and the appropriate copy of the certified payroll are required.

11.10.2 *Direct Labor Costs* – These costs are limited to those which are required in the contract documents. Coverage in excess of the contract provisions, secured by contractor/subcontractor(s) at its option, are ineligible. The following list of typical direct labor charges is provide for assistance and is not, in any way, intended to be complete or all encompassing.

11.10.2.1. Workmen's Compensation
11.10.2.2. Federal/State: Social Securing Tax and Unemployment Tax
11.10.2.3. Health, Welfare and Pension Benefits; (this cost is included in the wage rates appearing in the Mass. Wage Rates of the contract specifications).
11.10.2.4. Liability Insurance: Bodily Injury; Excess Umbrella; Property Damage; Public Blasters Insurance*
11.10.2.5. Builders Risk Insurance*
11.10.2.6. Experience Modification Insurance*
11.10.2.7. Surcharges*

*If applied to any required direct labor costs.

11.10.3. Following the award and prior to the execution of a construction contract, the contractor and filed sub-bidders (where applicable) shall submit for review by the City, documentation to establish the markup percentage(s).

11.10.4. *Materials and Freight* – Only those materials required as a result of the change order and reasonable freight charges for delivery of same are allowable.

11.10.5. *Equipment* – Only the equipment required as a result of the change order is allowable. Equipment rental rates shall be governed by the current Nelson/Dataquest Rental Rate Bluebook for Construction (the "Bluebook"). In determining the rental rate, the following shall apply:

11.10.5.1. For equipment already on the project – the money pro-rated rental rate by the hourly use shall be applicable.

11.10.5.2. For equipment not on the project – the daily rate, the weekly rate, or monthly rate will prevail, whichever will prove to be most cost effective. Small tools and manual equipment are examples of costs not allowable under this item. These costs are considered to be included in the overhead markup as provided in items 11.9.7.

11.10.6. *Overhead & Profit* – All other costs not previously mentioned are considered to be included in this item. It applies only for general contractors or subcontractor(s). Refer to paragraph 11.3 & 11.4.

11.10.7. *Credits* – Work deleted, materials and equipment removed for the contract, stored and/or returned shall be credited to the cost of the change order, less costs.

The Contractor shall furnish itemized statements of the cost of the work ordered and shall give the Engineer access to all accounts, bills and vouchers relating thereto; and unless the Contractor shall furnish such itemized statements, and access all accounts, bills and vouchers, he shall not be entitled to payment for any items of extra work for which such information is sought by the Engineer.

The Change Order will be prepared in such a manner as to clearly separate the various methods for which costs are to be applied. (Refer to Attachment A of the General Conditions for Form)

ARTICLE 12 – CHANGE OF CONTRACT TIME

12.1 The Contract Time may only be changed by a Change Order or a Written Amendment. Any claim for an extension or shortening of the Contract Time shall be based on written notice delivered by the party making the claim to the other party and to Engineer promptly (but in no event later than thirty (30) days after the occurrence of the event giving rise to the claim and stating the general nature of the claim. Notice of the extent of the claim with supporting data shall be delivered within sixty days after such occurrence (unless Engineer allows an additional period of time to ascertain more accurate data in support of the claim) and shall be accompanied by the claimant's written statement that the adjustment claimed is the entire adjustment to which the claimant has reason to believe it is entitled as a result of the occurrence of said event. All claims for adjustment in the Contract Time shall be determined by Engineer in accordance with paragraph 9.11 if City and Contractor cannot otherwise agree. No claim for an adjustment in the Contract Time will be valid if not submitted in accordance with the requirements of this paragraph 12.1.

12.2. The Contract Time will be extended in an amount equal to the time lost due to delays beyond the control of the Contractor if a claim is made therefor as provided in paragraph 12.1. Such delays shall include, but not be limited to, acts of neglect by City or others performing additional work as contemplated by Article 7 or to fires, floods, labor disputes, epidemics, abnormal weather conditions or acts of God.

12.3. All time limits stated in the Contract Documents are of the essence of the Agreement. The provisions of this Article 12 shall not exclude recovery for damages (including but not limited to: fees and charges of engineers, architects, attorneys and other professionals and court fees) for delay by either party.

12.4. If Contractor shall fail to complete the Work within in the Contract Time or extension of time granted by City, Contractor shall pay to the City the amount of liquidated damages as per paragraph 12.3 above and as specified in the Bid for each calendar day that the Contractor shall be in default after the time stipulated in the Contract Documents.

ARTICLE 13 -WARRANTY AND GUARANTEE, TESTS AND INSPECTIONS: CORRECTION, REMOVAL OR ACCEPTANCE OF DEFECTIVE WORK

Warranty and Guarantee:

13.1. The CONTRACTOR guarantees that all Work and services performed under the Contract, including materials and equipment furnished, used or installed in the completed construction project/facility are of quality workmanship and free from defects and flaws, and shall perform in strict accordance with the Drawings, Specifications and other Contract Documents. Also, the strength of all parts of all manufactured equipment shall be adequate and as specified and that the performance test requirements of the Contract shall be fulfilled. This guarantee shall be for a period of one year, unless specified otherwise under Special Conditions, from and after the date of completion and acceptance of the WORK, as stated in the final estimate. If part of the WORK is accepted in accordance with that sub-section of the Agreement titled "Partial Acceptance", the grantee for that part of the work shall be for one year from the date fixed for such acceptance. If at any time within the said period of guarantee any part of the WORK requires repairing, correction or replacement, the CITY may notify CONTRACTOR, in writing, to make the required repairs, corrections or replacement. If the CONTRACTOR neglects to commence making such repairs, corrections, or replacement tot the satisfaction of the CITY within seven (7) days from the date of receipt of such notice, or having commenced, fails to prosecute such work with due diligence, the CITY may employ other persons to make said repairs, corrections or replacements, and all costs for this remedial work, including compensation for additional professional services, and all charges associated with the above activities shall be paid the CONTRACTOR.

Access to Work:

13.2. ENGINEER and ENGINEER's representatives, other representatives of CITY, testing agencies and governmental agencies with jurisdictional interests will have access to the WORK at reasonable times for their observation, inspecting and testing. CONTRACTOR shall provide proper and safe conditions for such access.

Tests and Inspections:

13.3 CONTRACTOR shall give ENGINEER timely notice of readiness of the WORK for all required inspections, tests or approvals.

13.4. If Laws and Regulations of any public body having jurisdiction require any WORK (or part thereof) to specifically be inspected, tested or approved, CONTRACTOR shall assume full responsibility therefor, pay all costs in connection therewith and furnish ENGINEER the required certificates of inspection, testing or approval. CONTRACTOR shall also be responsible for and shall pay all costs in connection with any inspection or testing required in connection with CITY's or ENGINEER's acceptance of a Supplier of materials or

equipment proposed to be incorporated in the WORK, or of materials or equipment submitted for approval prior to CONTRACTOR's purchase thereof for incorporation in the WORK. Also, the cost of all inspections, tests and approvals in addition to the above which are required by the Contract Documents shall be paid by CONTRACTOR (unless otherwise specified).

13.5. All inspections, tests or approvals other than those required by Laws or Regulations of any public body having jurisdiction shall be performed by organizations acceptable to CITY and CONTRACTOR (or by ENGINEER if so specified).

13.6. If any WORK (including the work of others) that is to be inspected, tested or approved is covered without written concurrence of ENGINEER, it must, if requested by ENGINEER, be uncovered for observation. Such uncovering shall be at CONTRACTOR's expense unless CONTRACTOR has given ENGINEER timely notice of CONTRACTOR's intention to cover the same and ENGINEER has not acted with reasonable promptness in response to such notice.

13.7. Neither observations by ENGINEER nor inspections, tests or approvals by others shall relieve CONTRACTOR from CONTRACTOR's obligations to perform the WORK in accordance with the Contract Documents.

Uncovering Work:

13.8. If any WORK is covered contrary to the written request of ENGINEER, it must, if requested by ENGINEER, be uncovered for ENGINEER's observation and replaced at CONTRACTOR's expense.

13.9. If ENGINEER considers it necessary or advisable that covered WORK be observed by ENGINEER or inspected or tested by others, CONTRACTOR, at ENGINEER's request, shall uncover, expose or otherwise make available for observation, inspection or testing as ENGINEER may require, that portion of the WORK in question, furnish all necessary labor, material and equipment. If it is found that such WORK is *defective*, CONTRACTOR shall bear all direct, indirect and consequential costs of such uncovering, exposure, observation, inspection and testing and of satisfactory reconstruction, (including but not limited to fees and charges of engineers, architects, attorneys and other professionals), and CITY shall be entitled to an appropriate decrease in the Contract Price, and, if the parties are unable to agree as to the amount thereof, may make a claim therefor as provided in Article 11. If, however, such WORK is not found to be *defective*, CONTRACTOR shall be allowed an increase in the Contract Price or an extension of the Contract Time, or both, directly attributable to such uncovering, exposure, observation, inspection, testing and reconstruction; and, if the parties are unable to agree as to the amount or extent thereof, CONTRACTOR may make a claim therefor as provided in Articles 11, 12 and 13.

CITY May Stop the Work:

13.10. If the WORK is *defective*, or CONTRACTOR fails to supply sufficient skilled workers or suitable materials or equipment, or fails to furnish or perform the WORK in such a way that the completed WORK will conform to the Contract Documents, CITY may order CONTRACTOR to stop the WORK, or any portion thereof, until the cause for such order has been eliminated; however, this right of CITY to stop the WORK shall not give rise to any duty on the part of CITY to exercise this right for the benefit of CONTRACTOR or any other party.

Correction or Removal of Defective Work:

13.11. If required by ENGINEER, CONTRACTOR shall promptly, as directed, either correct all *defective* WORK, whether or not fabricated, installed or completed, or, if the WORK has been rejected by ENGINEER, remove it from the site and replace it with *nondefective* WORK. CONTRACTOR shall bear all direct, indirect and consequential costs of such correction or removal (including but not limited to fees and charges of engineers, architects, attorneys and other professionals) made necessary thereby.

One Year Correction Period:

13.12. If within one year after the date of Substantial Completion or such longer period of time as may be prescribed by Laws or Regulations or by the terms of any applicable special guarantee required by the Contract Documents or by any specific provision of the Contract Documents, any WORK is found to be *defective*, CONTRACTOR shall promptly, without cost to CITY, remove it from the site and replace it with *non-defective* WORK. If CONTRACTOR does not promptly comply with the terms of such instructions, or in an emergency where delay would cause serious risk of loss or damage, CITY may have the *defective* WORK corrected or the rejected WORK removed and replaced, and all direct, indirect and consequential costs of such removal and replacement (including but not limited to fees and charges of engineers, architects, attorneys and other professionals) will be paid by CONTRACTOR. In special circumstances where a particular item of equipment is placed in continuous service before Substantial Completion of all the WORK, the correction period for that item may start to run from an earlier date, if so provided in the Specifications or by Written Amendment.

Acceptance of Defective Work:

13.13. If, instead of requiring correction or removal and replacement of *defective* WORK, CITY (and, prior to ENGINEER's recommendation of final payment, also ENGINEER) prefers to accept it, CITY may do so.

CONTRACTOR shall bear all direct, indirect and consequential costs attributable to CITY's evaluation of and determination to accept such *defective* WORK (such costs to be approved by ENGINEER as to reasonableness and to include but not be limited to fees and charges of engineer, architects, attorneys and other professionals). If any such acceptance occurs prior to ENGINEER's recommendation of final payment, a Change Order will be issued incorporating the necessary revisions in the Contract Documents with respect to the WORK; and CITY shall be entitled to an appropriate decrease in the Contract Price, and, if the parties are unable to agree as to the amount thereof, CITY may make a claim therefor as provided in Article 11. If the acceptance occurs after such recommendation, an appropriate amount will be paid by CONTRACTOR to CITY.

CITY May Correct Defective Work:

13.14. If CONTRACTOR fails within a reasonable time after written notice of ENGINEER to proceed to correct and to correct *defective* WORK or to remove and replace rejected WORK as required by ENGINEER in accordance with paragraph 13.11, or if CONTRACTOR fails to perform the WORK in accordance with the Contract Documents, or if CONTRACTOR fails to comply with any other provision of the Contract Documents, CITY may, after seven days written notice to CONTRACTOR, correct and remedy any such deficiency. In exercising the rights and remedies under this paragraph CITY shall proceed expeditiously. To the extent necessary to complete corrective and remedial action, CITY may exclude CONTRACTOR from all or part of the site, take possession of all or part of the WORK, and suspend CONTRACTOR's services related thereto, take possession of CONTRACTOR's tools, appliances, construction equipment and machinery at the site and incorporate in the WORK all materials and equipment stored at the site for which CITY has paid CONTRACTOR but which are stored elsewhere.

13.14.1. CONTRACTOR shall allow CITY, CITY's representatives, agents and employees such access to the site as may be necessary to enable CITY to exercise the rights and remedies under this paragraph. All direct, indirect and consequential costs of CITY to exercise such rights and remedies will be charged against CONTRACTOR in an amount approved as to reasonableness by ENGINEER, and a Change Order will be issued incorporating the necessary revisions in the Contract Documents with respect to the WORK; and CITY shall be entitled to an appropriate decrease in the Contract Price, and, if the parties are unable to agree as to the amount thereof, CITY may make a claim therefor as provided in Article 11. Such direct, indirect and consequential costs will include but not be limited to fees and charges of engineers, architects, attorneys and other professionals, all court and arbitration costs and all costs of repair and replacement of work of others destroyed or damaged by correction, removal or replacement of CONTRACTOR's *defective* WORK.

13.14.2. CONTRACTOR shall not be allowed an extension of the Contract Time because of any delay in performance of the WORK attributable to the exercise by CITY of CITY's rights and remedies hereunder.

ARTICLE 14 - PAYMENTS TO CONTRACTOR AND COMPLETION

Schedule of Values:

14.1. The schedule of values established as provided in paragraph 2.9 will serve as the basis for progress payments and will be incorporated into a form of Application for Payment acceptable to ENGINEER. Progress payments on account of Unit Price Work will be based on the number of units completed.

Application for Progress Payment:

14.2. At least fifteen days before each progress payment is scheduled (but not more often than once a month), CONTRACTOR shall submit to ENGINEER for review an Application for Payment filled out and signed by CONTRACTOR covering the WORK completed as of the date of the Application and accompanied by such supporting documentation as required by the Contract Documents. Payment may not be requested on the basis of materials and equipment not incorporated in the WORK but delivered and suitably stored at the site. Such payment can be billed only after it is incorporated into the works and the CITY has received the material/equipment free and clear of all liens, charges, security interests and encumbrances (which are hereinafter in these General Conditions referred to as "Liens").

14.2.1 The amount of *retainage* with respect to progress payments will be a minimum five percent (5%) of the amount billed in each Application for Payment.

CONTRACTOR's Warranty of Title:

14.3. CONTRACTOR warrants and guarantees that title to all WORK, materials and equipment covered by any Application for Payment will pass to CITY free and clear of all liens no later than the time of payment to the Contractor for the same.

14.3.1. No materials or supplies for the work shall be purchased by CONTRACTOR or Subcontractor subject to any chattel mortgage or under a conditional sales contract or other agreement by which an interest is retained by the seller.

14.3.2. CONTRACTOR shall indemnify and save CITY harmless from all claims growing out of the lawful demands of Subcontractors, laborers, workmen, mechanics, materialmen, and furnishers of machinery and parts

thereof, equipment, power tools and all supplies, including commissary, incurred in the furtherance of the performance of this contract.

14.3.3. CONTRACTOR shall, at CITY's request, furnish satisfactory evidence that all obligations of the nature hereinabove designated have been paid, discharged, or waived. If CONTRACTOR fails to do so, the CITY may, after having service written notice, direct of withhold from CONTRACTOR's unpaid compensation, a sum of money deemed reasonably sufficient to pay any and all such lawful claims until satisfactory evidence is furnished that all liabilities have been fully discharged, whereupon payment to CONTRACTOR shall be resumed, in accordance with the terms of this Contract, but in no event shall be provisions of the sentence be construed to impose any obligations upon CITY to either CONTRACTOR or his Surety.

14.3.4. In paying any unpaid bills of the CONTRACTOR, CITY shall be deemed the agent of CONTRACTOR and any payment so made by CITY shall be considered as payment made under the Contract by CITY to CONTRACTOR and CITY shall not be liable to CONTRACTOR for any such payment made in good faith.

Review of Applications for Progress Payments:

14.4. ENGINEER will, within ten days after receipt of each Application for Payment, either indicate in writing a recommendation of payment and present the Application to CITY or return the Application to CONTRACTOR indicating in writing ENGINEER's reasons for refusing to recommend payment. In the latter case, CONTRACTOR may make the corrections and resubmit the Application. Forty five (45) days after presentation of the Application for Payment with ENGINEER's recommendation, the amount recommended will (subject to the provisions of the last sentence of paragraph 14.7) become due and when due will be paid by CITY to CONTRACTOR.

14.4.1 Progress payments will be made in accordance with Massachusetts General Law, Chapter 30, Section 39G.

14.5. ENGINEER's recommendation of any payment requested in an Application for Payment will constitute a representation by ENGINEER to CITY, based on ENGINEER's on-site observations of the WORK in progress as an experienced and qualified design professional and on ENGINEER's review of the Application for Payment and the accompanying data and schedules that the WORK has progressed to the point indicated: that, to the best of ENGINEER's knowledge, information and belief, the quality of the Work is in accordance with the Contract Documents (subject to an evaluation of the Work as a functioning whole prior to or upon Substantial Completion, to the results of any subsequent tests called for in the Contract Documents, to a final determination of quantities and classifications for Unit Price Work under paragraph 9.10 and to any other qualifications stated in the recommendation); and that CONTRACTOR is entitled to payment of the amount recommended. However, by recommending any such payment ENGINEER will not thereby be deemed to have represented that exhaustive or continuous on-site inspections have been made to check the quality or the quantity of the Work beyond the responsibilities specifically assigned to ENGINEER in the Contract Documents or that there may not be other matters or issues between the parties that might entitle CONTRACTOR to be paid additionally by CITY or CITY to withhold payment to CONTRACTOR.

14.6. ENGINEER's recommendation of final payment will constitute an additional representation by ENGINEER to CITY that the conditions precedent to CONTRACTOR's being entitled to final payment as set forth in paragraph 14.13 have been fulfilled.

14.7. ENGINEER may refuse to recommend the whole or any part of any payment if, in ENGINEER's opinion, it would be incorrect to make such representations to CITY. ENGINEER may also refuse to recommend any such payment, or, because of subsequently discovered evidence or the results of subsequent inspections or tests, nullify any such payment previously recommended, to such extent as may be necessary in ENGINEER's opinion to protect CITY from loss because:

14.7.1. the WORK is *defective*, or completed WORK has been damaged requiring correction or replacement,

14.7.2. the Contract Price has been reduced by Written Amendment or Change Order,

14.7.3. of ENGINEER's actual knowledge of the occurrence of any of the events enumerated in paragraphs 15.2.1 through 15.2.9, inclusive.

14.7.4 CITY may refuse to make payment of the full amount recommended by ENGINEER because claims have been made against CITY on account of CONTRACTOR's performance or furnishing of the WORK or Liens have been filed in connection with the WORK or there are other items entitling CITY to a set-off against the amount recommended, but CITY must give CONTRACTOR immediate written notice (with a copy to ENGINEER) stating the reasons for such action.

14.7.5. CONTRACTOR shall make payments to Subcontractor in accordance with MGL, c30, s 39F.

Substantial Completion:

14.8. When CONTRACTOR considers the entire WORK ready for its intended use CONTRACTOR shall notify CITY and ENGINEER in writing that the entire WORK is substantially complete (except for items specifically listed by CONTRACTOR as incomplete) and request that ENGINEER issue a certificate of Substantial

Completion. Within a reasonable time thereafter, CITY, CONTRACTOR and ENGINEER shall make an inspection of the WORK to determine that status of completion. If ENGINEER does not consider the WORK substantially complete, ENGINEER will notify CONTRACTOR in writing giving the reasons therefor. If ENGINEER considers the WORK substantially complete, ENGINEER will prepare and deliver to CITY a tentative certificate of Substantial Completion which shall fix the date of Substantial Completion. There shall be attached to the certificate a tentative list of items to be completed or corrected before final payment. CITY shall have seven days after receipt of the tentative certificate during which to make written objection to ENGINEER as to any provisions of the certificate or attached list. If, after considering such objections, ENGINEER concludes that the WORK is not substantially complete, ENGINEER will within fourteen days after submission of the tentative certificate to CITY notify CONTRACTOR in writing, stating the reasons therefor. If, after consideration of CITY's objections, ENGINEER considers the WORK substantially complete, ENGINEER will within said fourteen days execute and deliver to CITY and CONTRACTOR a definitive certificate of Substantial Completion (with a revised tentative list of items to be completed or corrected) reflecting such changes from the tentative certificate as ENGINEER believes justified after consideration of any objections from CITY. At the time of delivery of the tentative certificate of Substantial Completion ENGINEER will deliver to CITY and CONTRACTOR with respect to security, operation, safety, maintenance, heat, utilities, insurance and warranties. Unless CITY and CONTRACTOR agree otherwise in writing and so inform ENGINEER prior to ENGINEER's issuing the definitive certificate of Substantial Completion, ENGINEER's aforesaid recommendations will be binding on CITY and CONTRACTOR until final payment.

14.9. CITY shall have the right to exclude CONTRACTOR from the WORK after the date of Substantial Completion, but CITY shall allow CONTRACTOR reasonable access to complete or correct the items on the tentative list.

Partial Utilization:

14.10. Use by CITY of any finished part of the WORK which as specifically been identified in the Contract Documents, or which CITY, ENGINEER and CONTRACTOR agree constitutes a separately functioning and useable part of the WORK that can be used by CITY without significant interference with CONTRACTOR's performance of the remainder of the WORK, may be accomplished prior to Substantial Completion of all the WORK subject to the following:

14.10.1. CITY at any time may request CONTRACTOR in writing to permit CITY to use any such part of the WORK which CITY believes to be ready for its intended use and substantially complete. If CONTRACTOR agrees, CONTRACTOR will certify to CITY and ENGINEER that said part of the WORK is substantially complete and request ENGINEER to issue a certificate of Substantial Completion for that part of the WORK. CONTRACTOR at any time may notify CITY and ENGINEER in writing that CONTRACTOR considers any such part of the WORK ready for its intended use and substantially complete and request ENGINEER to issue a certificate of Substantial Completion for that part of the WORK. Within a reasonable time after either such request, CITY, CONTRACTOR and ENGINEER shall make an inspection of that part of the WORK to determine its status of completion. If ENGINEER does not consider that part of the WORK to be substantially complete, ENGINEER will notify CITY and CONTRACTOR in writing giving the reasons therefor. If ENGINEER considers that part of the WORK to be substantially complete, the provisions of paragraph 14.8 and 14.9 will apply with respect to certification of Substantial Completion of that part of the WORK and the division of responsibility in respect thereof and access thereto.

14.10.2. CITY may at any time request CONTRACTOR in writing to permit CITY to take over operation of any such part of the WORK although it is not substantially complete. A copy of such request will be sent to ENGINEER and within a reasonable time thereafter CITY, CONTRACTOR and ENGINEER shall make an inspection of that part of the WORK to determine its status of completion and will prepare a list of the items remaining to be completed or corrected thereon before final payment. If CONTRACTOR does not object in writing to CITY and ENGINEER that such part of the WORK is not ready for separate operation by CITY, ENGINEER will finalize the list of items to be completed or corrected and will deliver such list to CITY and CONTRACTOR together with a written recommendation as to the division of responsibilities pending final payment between CITY and CONTRACTOR with respect to security, operation, safety, maintenance, utilities, insurance, warranties and guarantees for that part of the WORK which will become binding upon CITY and CONTRACTOR at the time when CITY takes over such operation (unless they shall have otherwise agreed in writing and so informed ENGINEER). During such operation and prior to Substantial Completion of such part of the WORK, CITY shall allow CONTRACTOR reasonable access to complete or correct items on said list and to complete other related WORK.

14.10.3. No occupancy or separate operation of part of the WORK will be accomplished prior to compliance with the requirements of Article 5, in respect of property insurance.

Final Inspection:

14.11. Upon written notice from CONTRACTOR that the entire WORK or an agreed portion thereof is complete, ENGINEER will make a final inspection with CITY and CONTRACTOR and will notify CONTRACTOR in writing of all particulars in which this inspection reveals that the WORK is incomplete or *defective*. CONTRACTOR shall immediately take such measures as are necessary to remedy such deficiencies.

Final Application for Payment:

14.12. After CONTRACTOR has completed all such corrections to the satisfaction of ENGINEER and delivered all maintenance and operating instructions, schedules, guarantees, Bonds, certificates of inspection, marked-up record documents (as provided in paragraph 6.19) and other documents - all as required by the Contract Documents, and after ENGINEER has indicated that the WORK is acceptable (subject to the provision of paragraph 14.16), CONTRACTOR may make application for final payment following the procedure for progress payments. The final Application for Payment shall be accompanied by all documentation called for in the Contract documents, together with complete and legally effective releases or waivers (satisfactory to CITY) of Liens arising out of or filed in connection with the WORK. In lieu thereof and as approved by CITY, CONTRACTOR may furnish receipt or releases in full; an affidavit of CONTRACTOR that the releases and receipts include all labor, services, material and equipment for which a Lien could be filed, and that all payrolls, material and equipment bills, and other indebtedness, connected with the WORK for which CITY or CITY's property might in any way be responsible, have been paid or otherwise satisfied; and consent of the surety, if any, to final payment. If any Subcontractor or Supplier fails to furnish a release or receipt in full, CONTRACTOR may furnish a Bond or other collateral satisfactory to CITY to indemnify CITY against any Lien.

Final Payment and Acceptance:

14.13. If, on the basis of ENGINEER's observation of the WORK during construction and final inspection, and ENGINEER's review of the final Application for Payment and accompanying documentation, all as required by the Contract Documents, ENGINEER is satisfied that the WORK has been completed and CONTRACTOR's other obligations under this Contract have been fulfilled, ENGINEER will indicate in writing its recommendation of payment and present the Application to CITY for payment. Thereupon, ENGINEER will give written notice the CITY and CONTRACOR that that the WORK is acceptable subject to the provisions of paragraph 14.16. Otherwise, ENGINEER will return the Application to CONTRACTOR, indicating in writing the reasons for refusing to recommend final payment, in which case, CONTRACTOR shall make the necessary corrections and resubmit the Application. If the Application and accompanying documentation are appropriate as to form and substance, CITY shall, in accordance with the applicable Mass General Laws, pay CONTRACTOR the amount recommended by ENGINEER in accordance with Mass. General Laws.

14.14. If, through no fault of CONTRACTOR, final completion of the WORK is significantly delayed and if ENGINEER so confirms, CITY shall, upon receipt of CONTRACTOR's final Application for payment and recommendation of ENGINEER, and without terminating the Agreement, make payment of the balance due for that portion of the WORK fully completed and accepted. If the remaining balance to be held by CITY for the WORK not fully completed or corrected is less than the retainage stipulated in the Agreement, and if Bonds have been furnished as required in paragraph 5.1, the written consent of the surety to the payment of the balance due for that portion of the WORK fully completed and accepted shall be submitted by CONTRACTOR to ENGINEER with the Application for such payment. Such payment shall be made under the terms and conditions governing final payment, except that it shall not constitute a waiver of claims.

Contractor's Continuing Obligation:

14.15. CONTRACTOR's obligation to perform and complete the WORK in accordance with the Contract Documents shall be absolute. Neither recommendation of any progress or final payment by ENGINEER, nor the issuance of a certificate of Substantial Completion, nor any payment by CITY to CONTRACTOR under the Contract Documents, nor any use or occupancy of the WORK or any part thereof by CITY, nor any act of acceptance by CITY nor any failure to do so, nor any review and approval of a Shop Drawing or sample submission, nor the issuance of a notice of acceptability by ENGINEER pursuant to paragraph 14.13, nor any correction of *defective* WORK by CITY will constitute an acceptance of WORK not in accordance with the Contract Documents or a release of CONTRACTOR's obligation to perform the WORK in accordance with the Contract Documents (except as provided in paragraph 14.16).

Waiver of Claims:

14.16. The making and acceptance of final payment will constitute:

14.16.1. a waiver of all claims by CITY against CONTRACTOR, except claims arising from unsettled Liens, from *defective* WORK appearing after final inspection pursuant to paragraph 14.11, or from failure to comply with the Contract Documents or the terms of any special guarantees specified therein; however, it will not constitute a waiver by CITY of any rights in respect of CONTRACTOR's continuing obligations under the Contract Documents; and

14.16.2. a waiver of all claims by CONTRACTOR against CITY other than those previously made in writing and still unsettled.

ARTICLE 15 - SUSPENSION OF WORK AND TERMINATION

CITY May Suspend Work:

15.1. 15.1 CITY may, at any time and without cause, order suspension of the WORK, in accordance with MGL, Chpater 30, Section 39O.

CITY May Terminate:

15.2. Upon the occurrence of any one or more of the following events:

15.2.1. if CONTRACTOR commences a voluntary case under any chapter of the Bankruptcy Code (Title 11, United States Code), as now or hereafter in effect, or if CONTRACTOR takes any equivalent or similar action by filing a petition or otherwise under any other federal or state law in effect at such time relating to the bankruptcy or insolvency;

15.2.2. if petition s filed against CONTRACTOR under any chapter of the Bankruptcy Code as now or hereafter in effect at the time of filing, or if a petition is filed seeking any such any such equivalent or similar relief against CONTRACTOR under any other federal or state law in effect at the time relating to bankruptcy or insolvency;

15.2.3. if CONTRACTOR makes a general assignment for the benefit of creditors;

15.2.4. if a trustee, receiver, custodian or agent of CONTRACTOR is appointed under applicable law or under contract, whose appointment or authority to take charge of property of CONTRACTOR is for the purpose of enforcing a lien against such property or for the purpose of general administration of such property for the benefit of CONTRACTOR's creditors;

15.2.5. if CONTRACTOR admits in writing an inability to pay its debts general as they become due;

15.2.6. if CONTRACTOR persistently fails to perform the WORK in accordance with the Contract Documents(including but not limited to, failure to supply sufficient skilled workers or suitable materials or equipment or failure to adhere to the progress schedule established under paragraph 2.9 as revised from time to time);

15.2.7. if CONTRACTOR disregards Laws or Regulations of any public body having jurisdiction;

15.2.8. if CONTRACTOR disregards the authority of ENGINEER, or

15.2.9. if CONTRACTOR otherwise violated in any substantial way any provisions of the Contract Documents;

15.2.10 if the WORK to be done under this Contract shall be abandoned, or if this Contract, or any part thereof, shall be sublet without the previous written consent of CITY, of if the Contract or any claim thereunder shall be assigned by CONTRACTOR otherwise than as herein specified, or at any time ENGINEER shall certify in writing to CITY that the rate of progress of the WORK or any part thereof is unsatisfactory or that the WORK or any part thereof is unnecessary or unnecessarily delayed;

CITY may, after giving CONTRACTOR (and the surety if there be one) seven days' written notice and to the extent permitted by Laws and Regulations, terminate the services of CONTRACTOR, exclude CONTRACTOR from the site and take possession of the WORK and of all CONTRACTOR's tools, appliances, construction equipment and machinery at the site and use the same to the full extent they could be used by CONTRACTOR (without liability to CONTRACTOR for trespass or conversion), incorporate in the WORK all materials and equipment stored at the site or for which CITY has paid CONTRACTOR but which are stored elsewhere, and finish the WORK as CITY may deem expedient. In such case CONTRACTOR shall not be entitled to receive any further payment until the WORK is finished. If the unpaid balance of the Contract Price exceed the direct, indirect and consequential costs of completing the WORK (including but not limited to fees and charges of engineer, architects, attorneys and other professionals and court costs) such excess will be paid to CONTRACTOR. If such costs exceed such unpaid balance, CONTRACTOR shall pay the difference to CITY. Such costs incurred by CITY will be approved as to reasonableness by ENGINEER and incorporated in a Change Order, but when exercising any rights or remedies under this paragraph CITY shall not be required to obtain the lowest price for the Work performed.

15.3. Where CONTRACTOR's services have been so terminated by CITY, the termination will not affect any rights or remedies of CITY against CONTRACTOR then existing or which may thereafter accrue. Any retention or payment of monies due CONTRACTOR by CITY will not release CONTRACTOR from liability.

15.4. Upon seven days' written notice to CONTRACTOR and ENGINEER, CITY may, without cause and without prejudice to any other right or remedy, elect to abandon the WORK and terminate the Agreement. In such case, CONTRACTOR' shall be paid for all WORK executed and any expense sustained plus reasonable termination expenses, which will include, but not be limited to, direct, indirect and consequential costs (including but not limited to, fees and charges of engineers, architects, attorneys and other professionals and court cost(s).

Contractor May Stop Work or Terminate:

15.5. If, through no act or fault of CONTRACTOR, the WORK is suspended for a period of more than ninety days by CITY or under an order of court or other public authority, or ENGINEER fails to act on any Application for Payment within thirty days after it is submitted, or CITY fails for forty five days to pay CONTRACTOR any sum finally determined to be due, then CONTRACTOR may upon seven days' written notice to CITY and ENGINEER, terminate the Agreement and recover from CITY payment for all Work executed and any expense sustained plus reasonable termination expenses.

15.5.1. In addition and in lieu of terminating the Agreement, if ENGINEER has failed to act on an Application for Payment or CITY has failed to make any payment as aforesaid, CONTRACTOR may upon seven days' written notice to CITY and ENGINEER stop the Work until payment of all amounts then due. The provisions of this paragraph shall not relieve CONTRACTOR of the obligations under paragraph 6.28 to carry on the Work in accordance with the progress schedule and without delay during disputes and disagreements with CITY.

ARTICLE 16 – DISPUTES BETWEEN CITY AND CONTRACTOR

6.1 16.1 All claims, disputes and other matters in question between CITY and CONTRACTOR arising out of, or relating to the Contract Documents or the breach thereof, (except for claims which have been waived by the making or acceptance of final payment as provided by paragraph 14.16) will be decided through legal means by filing a complaint in the Superior Court in accordance with the applicable Mass. General Laws.

16.2. No demand for initiating legal proceedings on any claim, dispute or other matter that is required to be referred to ENGINEER initially for decision in accordance with paragraph 9.11 will be filed until the earlier of (a) the date on which ENGINEER has rendered a decision or (b) the tenth day after the parties have presented their evidence to ENGINEER if a written decision has not been rendered by the ENGINEER before that date. No demand for implementing legal proceedings on any such claim or dispute or other matter will be filed later than thirty days after the date on which ENGINEER has rendered a written decision in respect thereof in accordance with paragraph 9.11; and in the failure to initiate legal proceeding within said thirty days' period, shall result in ENGINEER's decision being final and binding upon the CITY and CONTRACTOR. If ENGINEER renders a decision after the legal proceedings have been initiated, such decision may be entered as evidence but will not effect the course of the legal proceedings, except where the decision is acceptable to the parties concerned. No demand to initiate legal proceedings against any written decision of ENGINEER rendered in accordance with paragraph 9.10 will be made later than ten days after the party making such demand has delivered written notice of intention to appeal as provided in paragraph 9.10.

16.3. No complaint in the Superior Court, or any claim, dispute or other matter that is required to be referred to Engineer initially for decision in accordance with these contract documents will be filed until the earlier of (a) the date on which Engineer has rendered a decision or (b) the tenth day after the parties have presented their evidence to the Engineer if a written decision has not been rendered b Engineer before that date.

No complaint in the Superior Court on any such claim or dispute or other mater will be filed later than thirty days after the date on which the Engineer has rendered a written decision in respect thereof in accordance with these contract documents; and in the failure to initiate legal proceeding within said thirty day period shall result in Engineer's decision being final and binding upon Owner and Contractor. If Engineer renders a decision after the legal proceeding has been initiated, such decision may be entered as evidence but will not supercede the legal proceeding, except where the decision is acceptable to the parties concerned.

16.4. The legal proceedings arising out of or relating to the Contract Documents shall not include by consolidation, joinder or in any other manner any other person or entity (including ENGINEER, ENGINEER's agents, employees, or consultants) who is not a party to this contract unless:

16.4.1. the inclusion of such other person or entity is necessary if complete relief is to be afforded among those who are already parties to the contract and/or the dispute.

16.4.2. such other person or entity is substantially involved in a question of law of fact which is common to those who are already parties to the contract and which will arise in such proceedings, and

16.4.3. the CONTRACTOR shall carry on the Work and maintain the progress schedule during the legal proceedings unless otherwise agreed in writing by the CITY and CONTRACTOR unless the CONTRACTOR obtains an injunction to suspend all and/or specific activities pertaining to the contract scope of work.

ARTICLE 17 - MISCELLANEOUS

Giving Notice:

17.1. Whenever any provision of the Contract Documents requires the giving of written notice, it will be deemed to have been validly given if delivered in person to the individual or to a member of the firm or to an officer of the corporation for whom it is intended, or if delivered at

or sent be registered or certified mail, postage prepaid, to the last business address known to the giver of the notice.

Computation of Time:

17.2.1. When any period of time is referred to in the Contract Documents by days, it shall be interpreted to mean calendar days and the end date will be computed to exclude the first and include the last day of such period. If the last day of any such period falls on a legal holiday, such day will be omitted from the computation.

17.2.2. A calendar day of twenty-four hours measured from midnight to the next midnight shall constitute a day.

General:

17.3 Should CITY or CONTRACTOR suffer injury or damage to person or property because of any error, omission or act of the other party or of any of the other party's employees or agents or others for whose acts the other party is legally liable, claim will be made in writing to the other party within a reasonable time of the first observance of such injury or damage. The provisions of this paragraph 17.3 shall not be construed as a substitute for or a waiver of the provisions of any applicable statute of limitations or repose.

17.4. The duties and obligations imposed by these General Conditions and the rights and remedies available hereunder to the parties hereto, and, in particular but without limitation, the warranties, guarantees and obligations imposed upon CONTRACTOR by paragraphs 6.29, 6.30, 13.1, 13.12, 13.14, 14.3, and 15.2 and all of the rights and remedies available to CITY and ENGINEER thereunder, are in addition to, and are not to be construed in any way as a limitation of any rights and remedies available to any or all of them which are otherwise imposed or available by Laws or Regulations, by special warranty or guarantee or by other provisions of the Contract Documents, and the provisions of this paragraph will be as effective as if repeated specifically in the Contract Documents in connection with each particular duty, obligation, right and remedy to which they apply. All representations, warranties and guarantees made in the Contract Documents will survive final payment and termination or completion of the Agreement.

17.5. Both the address given in the Bid Form upon which this Agreement is founded, and the CONTRACTOR's office at or near the site of the WORK are hereby designated as places to either of which notices, letters, and other communications to CONTRACTOR shall be certified, mailed, or delivered. The delivering at the above names places, or depositing in a post paid wrapper directed to the first-named place, in any post office box regularly maintained by the U.S. Post Office, of any notice, letter or other communication to CONTRACTOR shall be deemed sufficient service thereof upon CONTRACTOR; and the date of said service shall be date of such delivery or mailing. The first-named address may be changed at any time by an instrument in writing, executed and acknowledged by CONTRACTOR, and delivered to the CITY and ENGINEER. Notice herein shall be deemed to preclude or render inoperative the service of any notice, letter of other communication upon CONTRACTOR personally.

17.5.1 The requirements and provisions of all applicable laws and any amendments thereof or additions thereto as to the employment of labor, and to the schedule of minimum wage rates established in compliance with laws shall be a part of these Contract Documents. If, after the Notice of Award, it becomes necessary to employ any person in a trade or occupation not classified in the wage determinations, such person shall be paid at not less than such rates as shall be determined by the officials administering the laws mentioned above. Such approved minimum rates shall be retroactive to the time of the initial employment of such person in such trade or occupation. CONTRACTOR shall notify CITY of his intention to employ persons in trades or occupations not classified in sufficient time for CITY to obtain approved rates for such trades or occupations.

17.6.1 The schedule of wages referred to above are minimum rates only, and CITY will not consider any claims for additional compensation made by CONTRACTOR because of payment by CONTRACTOR of any wage rates in excess of the applicable rate contained in these Contract Documents. All disputes in regard to the payment of wages in excess of those specified in the schedule shall be resolved by the CONTRACTOR.

17.6.2 The said schedule of wages shall continue to be the minimum rates to be paid during the life of this Agreement and a legible copy of said schedule shall be kept posted in a conspicuous place at the site of the Work.

17.6.3 A copy of the State and/or Federal Minimum Wage Rates relevant to this project is included in the contract documents. Either one will be used, depending upon the source of the project funds, as applicable.

ARTICLE 18 STATUTORY REQUIREMENTS - GENERAL

18.1 The CONTRACTOR shall keep itself fully informed of all current State and Federal Laws and Municipal Ordinances and Regulations that in any manner affecting those engaged or employed in the work or in any way affecting the conduct of the work, and of all such orders and decrees of bodies or tribunals having jurisdiction or authority over same and of all provisions required by law to be made a part of this contract, all of which provisions are hereby incorporated by reference and made a part thereof. If any discrepancy or inconsistency is discovered in the drawings or specifications or contract

documents for this work in relation to any such law, ordinance, regulation, order or decree, the CONTRACTOR shall forthwith report the same to the ENGINEER in writing. The CONTRACTOR, its subcontractors, labor employees, and agents shall at all times observe and comply with all such existing and future laws, ordinances, regulations, orders and decrees; and shall protect and indemnify the CITY and the ENGINEER and all of its and their officers, agents and servants against any claim of liability arising from or based on the violation of any such law, ordinance, regulation, order or decree, whether by the Contractor, itself or its agents, employees or sub-contractors.

18.2 All materials furnished and work done shall comply with all applicable State, Federal and local laws and regulations.

All the actual texts of the applicable laws, regulations and technical codes, standards and criteria referred to in the contract documents are not included herein. These shall be deemed inserted herein through reference. Texts are available for reference by the CONTRACTOR in the City Solicitor's Office.

18.3. The CONTRACTOR shall have a competent person or persons, as required under the Occupational Safety and Health Act of 1970 (OSHA) on the site to inspect the work and to supervise conformance of the work with the provisions of the Act and all amendments thereto.

18.3.1. The CONTRACTOR shall comply with the Department of Labor Safety and Health Regulations for Construction promulgated under the Occupational Safety and Health Act of 1970 (PS-91-569) and under Section 107 of the Contract Work Hours and Safety Standards Act (PL-91-54).

18.3.2. The CONTRACTOR shall be subject to all of the Safety and Health Regulations, CFR 29, Part 1926, and all subsequent amendments, as promulgated by the U.S. Department of Labor on June 24, 1974 and CFR 29, Part 1910, General Industry Safety and Health Regulations identified as applicable to construction.

18.3.2. 18.3.3. The CONTRACTOR shall also be subject to the Safety and Health Regulations of the Massachusetts Department of Labor and Industries, Division of Industrial Safety "Rules and Regulations for the Prevention of Accidents in Construction Operations (Chapter 454 CMR, 10.0 et. seq.)".

18.3.4. All excavations within public or private ways are subject to the requirements of the Massachusetts General Law, Chapter 353, Acts of 1983.

18.3.5. The CONTRACTOR shall comply with all Orders of Conditions issued by the City Conservation Commission, Mass Wetlands Protection Act M.G.L. c. 131, s. 40 and other permit requirements stipulated by other state and federal agencies such as the Department of Environmental Protection, U.S. Army Corps of Engineers, the DEP Water Quality Certification, Massachusetts Coastal Zone Management Agency, and those of Chapter 91 permits.

18.3.5.1. All public projects shall be designed, bid and constructed/executed and services provided in compliance with the applicable Massachusetts Procurements Laws.

Listed below are some of the principal MGLs, CMRs and CFRs which govern various aspects of project design, construction, execution, controls and management. The lists of laws given below is by no means complete. Some of the applicable laws, regulations, standards and criteria are also listed in other sections of these specifications.

In addition to these laws, the Contractor, Architects, Engineers, Technical Laboratories shall also comply with the applicable State, Federal or local specifications, standards, codes and criteria.

18.3.6. All federal, State and City of Quincy regulations in relation to Minority Work Force, Equal Employment Opportunity, Employment of Quincy Residents and Minimum Wage Rates shall be complied with. Goals for this project are as follows:

18.3.7. The Contractor shall maintain on this project a not less than ten percent (10%) ratio of minority employee manhours to total manhours in each job category.

18.3.8. A minimum of ten percent Minority Business Enterprise (MBE) and five percent Women's Business Enterprise (WBE) participation by state certified MBEs and WBEs will be required and maintained on this project. The bidder shall submit complete MBE/WBE forms and SOMBA certification letters with the bid.

18.3.9 The City of Quincy's Ordinance Chapter 12.28, requiring Contractors working on City supported construction projects to have a) one Quincy Resident out of every three workers on the project and b) a bona fide apprenticeship training program must be complied with.

18.3.10. The Contractor shall pay minimum wage rates to the workers, as per the latest schedule of rates, as mandated by the Commonwealth of Massachusetts Department of Labor and Industries and/or the Department of Housing and Urban Development.

18.3.11. Minority Workforce Percentage: The following percentages shall apply when applying minimum percentages to State and State-Assisted Contracts within the Commonwealth.

Boston:
Impact Area [Jamaica Plain (part),
Mattapan, South Cove, Chinatown,
Bay Village, Roxbury, Dorchester,

South End	30%
Others	10%
Cambridge:	12%
New Bedford:	18%
Springfield:	10%
All other cities and towns:	10%

18.4 All Massachusetts General Laws listed below and others given in various sections of these specifications shall be deemed inserted herein by reference. It is understood that the latest amendments to theses laws shall also been deemed inserted by reference.

18.4.1. METHOD OF PAYING SUBCONTRACTORS
MGL C. 30; s. 39F

18.4.2. METHOD OF PAYING GENERAL CONTRACTORS–COMPLETION OF PUBLIC WORKS: SEMI-FINAL AND FINAL ESTIMATES:PAYMENTS: EXTRA WORK: DISPUTED ITEMS
MGL C. 30, s. 39G

18.4.3. CLAIMS FOR UNFORESEEN CONDITIONS
MGL C.30, s. 39N

18.4.4. CLAIMS FOR DELAY
MGL C.30, s. 39O

18.4.5. DECISIONS AND APPROVALS BY ENGINEER OR ARCHITECT
MGL C 30, s. 39P

18.4.6. PREFERENCE IN EMPLOYMENT, WAGES
MGL C.149, s.26

18.4.7. HOURS OF WORK
MGL C.149, s.34

18.4.8. WORK BY FOREIGN CORPORATIONS
MGL C.30, s. 39L

18.4.9. MINIMUM WAGE RATES
MGL C. 149, s. 26-27D

18.4.10. RECORD KEEPING
MGL C. 30, S. 39R

18.4.11. FAIR EMPLOYMENT PRACTICE LAW
MGL Chapter 151 B
Executing Order 74, as amended by ExecutiveOrder #116 Dated May 1, 1975.

18.4.12. HOURS & CLASSES OF WORKERS
MGL Chapter 149, Section 44C

18.4.13. PERCENTAGE OF MINORITY WORKFORCE
MGL Chapter 149, Section 34
10% minimum required for Quincy Area

18.4.14. AFFIRMATIVE ACTION
301 CMR 50.00

18.4.15. MBE/WBE PARTICIPATION
MGL Chapter 30a, Section VIII
Hearings and Appeals

18.4.16. EQUAL EMPLOYMENT OPPORTUNITY ACT OF 1965

18.4.17. SAFETY & HEALTH REGULATIONS
CFR 29, Parts 1910 and 1926 & all amendments

18.4.18. INVITATION TO BID, NOTICE, CONTENTS, VIOLATIONS & PENALTY
MGL Chapter 149, §445
MGL Chapter 30, § 39I, 39M

18.4.19. NOTICE TO AND COORDIATION WITH UTILITIES
MGL Chapter 353, §40, c. 82.

18.4.20. CONTRACTOR TRADE & APPRENTICES
MGL Chapter 23, Section 11E through 11L

18.4.21. Equal Employment Opportunity & Affirmative Action & Anti-Discrimination
MGL 30A and 804 CMR 9.00

END OF DOCUMENT

SUPPLEMENTARY CONDITIONS
TABLE OF CONTENTS

PART I - AMENDMENTS TO THE GENERAL CONDITIONS

Article/Section Number	*Title*
1	Definitions
2	Preliminary Matters
3	Contract Documents; Intent, Amending and Reuse
4	Availability of Lands; Physical Conditions Reference Points
5	Bonds and Insurance
6	Contractor's Responsibilities
8	Owner's Responsibilities
9	Engineer's Status During Construction
11	Change in Contract Price
12	Change in Contract Time
13	Warranty & Guarantee, Tests & Inspections, Correction, Removal or Acceptance of Defective Work
14	Payments to Contractor and Completion
15	Suspension of Work and Termination
16	Arbitration
17	Miscellaneous

PART II - STATUTORY REQUIREMENTS

1	Statutory Requirements in General
2	Deleted
3	Deleted
4	Safety & Health Regulations
5	Permits
6	Change Orders
7	Commonwealth of Mass. Payment, Wage Rates, Etc.
8	Commonwealth of Mass. Equal Employment Opportunity Anti-Discrimination Requirements
9	Deleted
~~10~~	~~City of Quincy, Residency Requirements for City-Supported Construction Projects~~ (Deleted)
11	~~City of Quincy, Equal Employment Opportunity~~
12	City of Quincy Blasting Requirements

SUPPLEMENTARY REQUIREMENTS

PART I - AMENDMENTS TO THE GENERAL CONDITIONS

These Supplementary Conditions amend or supplement the Standard General Conditions of the Construction Contract and other provisions of the Contract Documents, as indicated below. All provisions which are not so amended or supplemented remain in full force and effect.

ARTICLE 1 - DEFINITIONS

Add the following language at the beginning of the definition entitled "Contract Documents" in the General Conditions.

The Invitation to Bid, Instructions to Bidders

Add the words "or plans" after the word "drawings" in the first line of the definition entitled "Drawings" in the General Conditions.

Delete the definition of Specifications in the General Conditions in its entirety and add the following in its place:

"Sections included under Division 1 through Division 2 of the Project Manual."

Delete the definition of Substantial Completion in the General Conditions in its entirety and add the following in its place:

"Substantial Completion shall mean either that the Work required by the Contract has been completed except for work having a Contract Price of less than one percent of the then adjusted total contract price, or substantially all of the Work had been completed and opened to Owner's use except for minor incomplete or unsatisfactory work items that do not materially impair the usefulness of the Work required by the Contract."

Add the following new definitions at the end of Article 1 of the General Conditions:

Conditions of the Contract - The combined General Conditions and Supplementary Conditions.

Project Manual - The Invitation to Bid; Instructions to Bidders; Bid Form, Agreement, Bonds, General Conditions; Supplementary Conditions; Specifications and Appendices.

Site - The specific area adjacent to an including the area upon which the construction work is performed.

ARTICLE 2 - PRELIMINARY MATTERS

SC-2.3

Delete paragraph 2.3 of the General Conditions in its entirety and insert the following in its place:

2.3. The Contract Time will commence to run on the twentieth day after the effective date of the Agreement.

SC-2.7.

Delete paragraph 2.7. of the General Conditions in its entirety and insert the following in its place:

2.7. Before execution of the Agreement, the Contractor shall deliver to the Owner with a copy to the Engineer, certificates of insurance (and other evidence requested by the Owner) which the Contractor is required to purchase and maintain in accordance with the requirements of Article 5.

ARTICLE 3 - CONTRACT DOCUMENTS: INTENT, AMENDING AND REUSE

SC-3.1.

Add a new paragraph immediately after paragraph 3.1 of the General Conditions which is to read as follows:

3.1.1. Each and every provision of law and clause required by law to be inserted in these Contract Documents shall be deemed to be inserted herein, and they shall be read and enforced as though they were included herein, and if through mistake or otherwise, any such provision is not inserted, or if not correctly inserted, then upon the application of either party, the Contract Documents shall forthwith be physically amended to make such insertion.

ARTICLE 4 - AVAILABILITY OF LANDS; PHYSICAL CONDITIONS; REFERENCE POINTS

SC-4.1.

Add a new paragraph immediately after paragraph 4.1 of the General Conditions which is to read as follows:

4.1.1. If all lands and rights-of-way are not obtained as herein contemplated before construction begins, Contractor shall begin the Work upon such land and rights-of-way as Owner has previously acquired and no claim for damages whatsoever will be allowed by reason of the delay in obtaining the remaining lands and rights-of-way. Should Owner be prevented or enjoined from proceeding with the Work, or from authorizing its prosecution, either before or after the commencement, by reason of any litigation, or by reason of its inability to procure any lands or rights-of-way for the Work, Contractor shall not be entitled to make or assert claim for damage by reason of said delay, or to withdraw from the Agreement except by consent of Owner. Time for completion of the Work will be extended as provided in Article 12, to such time as Owner determines will compensate for the time lost by such delay.

SC-4.2.

Add a new paragraph immediately after paragraph 4.2.6. of the General Conditions which is to read as follows:

4.2.7. Information on Drawings and any statements in the Project Manual referring to the condition under which the Work is to be performed or the existence of utilities or other underground structures are not guaranteed to be correct or to be complete representation of all existing data with reference to conditions affecting the Work. Efforts have been made, however, to make this information complete and accurate on the basis of all data and information which could be procured by Engineer. If, in the opinion of Engineer, permanent relocation of a utility not otherwise provided for is required, he shall direct Contractor, in writing, to perform the Work. Work so directed will be paid as provided in Article 11 of the General Conditions.

SC-4.2.

Add a new paragraph immediately after Paragraph 4.2.7. of the Supplementary Conditions which is to read as follows:

4.2.8. Adjustments resulting from sub-surface or latent conditions will be in accordance with Massachusetts General Law, Chapter 30, Section 39N, included in Part II of the Supplementary Conditions.

SC-4.5.

Add a new paragraph immediately after paragraph 4.4. of the General Conditions which is to read as follows:

4.5. Engineer may check lines, elevations, reference marks, batter boards, etc., set by Contractor and Contractor shall correct any errors disclosed by such check. Such a check shall not be considered as approval of Contractor's Work and shall not relieve Contractor of the responsibility for accurate construction of the entire Work. Contractor shall furnish personnel to assist Engineer in checking lines and grades.

ARTICLE 5 - BONDS AND INSURANCE

SC-5.3.

The limits of liability for the insurance required by paragraph 5.3. of the General Conditions shall provide coverage for not less than the following amounts, or greater where required by law.

5.3.1 and 5.3.2 - Workers' Compensation

(1)	Worker's Compensation	(MGL c152)
(2)	Employer's Liability	$1,000,000.

5.3.3., 5.3.4., and 5.3.6. - Comprehensive General Liability including Operations/Premises, Contractor's Protective, Products/Completed Operations, and Person Injury liabilities:

(1)	Bodily Injury	$1,000,000. $1,000,000.	Each Occurrence Annual Aggregate
(2)	Property Damage: including Explosion Collapse and Under-ground Coverage	$1,000,000. $1,000,000.	Each Occurrence Annual Aggregate
(3)	Personal Injury, with employment exclusion deleted.	$1,000,000.	Annual Aggregate

5.3.7. Comprehensive Automobile Liability, including Owner, Hired and Non-Owned Vehicles:

(1)	Bodily Injury	$1,000,000. $1,000,000.	Each Person Each Accident
(2)	Property Damage	$1,000,000.	Each Occurrence

SC-5.4.

The Contractual Liability required by paragraph 5.4. of the General Conditions shall provide coverage for not less than the following amounts:

5.4.1.	Bodily Injury	$1,000,000.	Each Occurrence
5.4.2.	Property Damage including Explosion Collapse and Underground coverages.	$1,000,000. $1,000,000.	Each Occurrence Annual Aggregate

SC-5.5.

Delete paragraph 5.5. of the General Conditions in its entirety and insert the following in its place:

5.5. Contractor shall purchase and maintain a separate Owner's Protective Liability policy, issued at the expense of Contractor, including Owner and Engineer as named insured. This insurance shall provide coverage of not less than the following amounts:

5.5.1.	Bodily Injury	$1,000,000.	Each Occurrence
5.5.2.	Property Damage: including Explosion, Collapse and Underground coverages.	$1,000,000. $1,000,000.	Each Occurrence Annual Aggregate

SC-5.6.

Delete paragraph 5.6. of the General Conditions in its entirety.

SC-5.7.

Delete paragraph 5.7. of the General Conditions in its entirety.

SC-5.8.

Delete paragraph 5.8. of the General Conditions in its entirety.

SC-5.9.

Delete paragraph 5.9. of the General Conditions in its entirety.

SC-5.10.

Delete paragraph 5.10. of the General Conditions in its entirety.

SC-5.11.

Delete paragraphs 5.11.1 and 5.11.2 of the General Conditions in their entirety.

SC-5.12.

Delete paragraph 5.12. of the General Conditions in its entirety.

SC-5.13.

Delete paragraph 5.13. of the General Conditions in its entirety.

SC-5.14.

Delete paragraph 5.14. of the General Conditions in its entirety and insert the following in its place

5.14 If Owner has any objection to the coverage afforded by or other provisions of the insurance required to be purchased and maintained by Contractor in accordance with this Article 4 on the basis of its not complying with the Contract Documents, Owner will notify Contractor in writing thereof within ten days of the date of delivery of such certificates to Owner in accordance with paragraph 2.7. Contractor will provide such additional information in respect of insurance provided by him as Owner may reasonably request.

SC-5.16

Add a new paragraph immediately after paragraph 5.15 of the General Conditions to read as follows:

5.16. Contractor may purchase and maintain excess liability insurance in the umbrella form in order to satisfy the limits of liability required for the insurance to be purchased and maintained in accordance with paragraphs 5.3. and 5.4. Evidence of such excess liability shall be delivered to Owner in accordance with paragraph 2.7. in the form of a certificate indicating the policy numbers and limits of liability of all underlying insurance. The umbrella liability insurance shall have a combined single limit of not less than $5,000,000. Such insurance shall contain a provision that the coverage afforded will not be canceled or materially changed until at least thirty days prior written notice has be given to Owner.

ARTICLE 6 - CONTRACTOR'S RESPONSIBILITIES

SC-6.3.

Add the following new paragraphs immediately after paragraph 6.3. of the General Conditions:

6.3.1. This Agreement is subject to the applicable provisions of the Contract Work Hours and Safety Standards Act, Public Law 87-581, 87th Congress. No Contractor or Subcontractor contracting for any part of the Work shall require or permit any laborer or mechanic to be employed on the Work in excess of eight hours in any calendar days or in excess of forth hours in any work week, unless such laborer or mechanic receives compensation at a rate not less than on and one-half times his basic rate of pay for all hours worked in excess of eight hours in any calendar day or in excess of forty hours in any such work week, as the case may be.

6.3.2. Except as may be otherwise required by law, all claims and disputes pertaining to the classification of labor employed on the project under this Contract shall be decided by Owner's governing body or other duly designated official.

6.3.3. Contractor shall employ only competent persons to do the Work and whenever Owner shall notify Contractor in writing, that any person on the Work appears to be incompetent, unfaithful, disorderly, or otherwise unsatisfactory, such person shall be removed from the Project and shall not again be employed on it except with the consent of Owner.

6.3.4. Contractor and Subcontractor shall, insofar as practicable, give preference in the hiring of workers for the Project to qualified local residents with first preference being given to citizens of the United States who have served in the armed forces of the United States and have been honorably discharged therefrom or released from active duty.

SC-6.7

Add the following new paragraph immediately after paragraph 6.7.3. of the General Conditions.

6.7.4. Whenever it is written that an equipment manufacturer must have a specified period of experience with his product, equipment which does not meet the experience period can be considered if the equipment supplier or manufacturer is willing to provide an efficient guarantee bond or cash deposit for the duration of the specified time period which will guarantee replacement of that equipment in the event of failure.

SC-6.8.

Delete paragraphs 6.8.1 and 6.8.2 of the General Conditions in their entirety and insert the following in their place:

6.8. Contractor shall not employ any Subcontractor, Supplier, or other person or organization (including those who are to furnish the principal items or materials or equipment) whether initially or as a substitute, against whom owner may have reasonable objection. Acceptance of any waiver of any right of Owner to reject defective works. Contractor shall not be required to employ any Subcontractor, other persons or organizations against whom Contractor has reasonable objection.

SC-6.9.

Add a new sentence at the end of paragraph 6.9. to read as follows:

Owner or Engineer may furnish to any such Subcontractor, Supplier or other person or organization to the extent practicable, evidence of amounts paid on their behalf to Contractor in accordance with Contractor's Application for Payment.

SC-6.9.1.

Add the following new paragraph immediately after paragraph 6.9. of the General Conditions which is to read as follows:

6.9.1. With the exception of the MBE/WBE Participation Requirements, the Contractor shall not award more than thirty percent (30%) of the remaining work (based on the remainder of the total contract price) to Subcontractor(s) without the prior approval of the Owner.

SC-6.10.

Add the following language at the end of paragraph 6.10 of the General Conditions.

Except as required otherwise by Mass. General Law, Chapter 149, Section 44F.

SC-6.15.

Add the following language at the end of paragraph 6.15. of the General Conditions:

The materials and supplies to be used in the Work of this Contract are exempt from the Sales and Use Tax of the Commonwealth of Massachusetts. Contractor shall obtain the proper certificates, maintain the necessary records and otherwise comply with the requirements of Chapter 14 of the Acts of 1966 and any other amendments thereto.

SC-6.20.

Add the following language at the end of paragraph 6.20. of the General Conditions:

In the event of temporary suspension of the Work, or during inclement weather, or whenever Engineer may direct, Contractor shall, and cause Subcontractors to protect carefully the Work and materials against damage or injury from the weather. If, in the opinion of Engineer, any portion of the Work or materials shall h ave been damaged or injured by reason of failure on the part of the Contractor or any Subcontractors to so protect the Work, such Work and materials shall be removed and replaced at the expense of Contractor, and

SC-6.23.

Amend the first sentence of paragraph 6.23. of the General Conditions by deleting the words "five copies" and replacing with the words "six copies".

SC-6.30.

Add the following language at the end of paragraph 6.30. of the General Conditions which is to read as follows:

If, through acts of neglect on the part of Contractor, any other Contractor or Subcontractor shall suffer loss or damage on the Work, Contractor shall settle with such other Contractor or Subcontractor by agreement or arbitration. If such other Contractor or Subcontractor shall assert any claim against Owner on such account of any damage alleged to have been sustained, Owner shall notify Contractor, who shall indemnify and save harmless Owner against any such claim.

SC-6.33.

Add a new paragraph immediately after paragraph 6.32. of the General Conditions which is to read as follows:

6.33. Contractor shall comply with all applicable provisions of Chapter 30, Section 39R of the Mass. General Laws regarding Contractor's records, which is included in Part II of the Supplementary Conditions.

ARTICLE 8 - OWNER'S RESPONSIBILITY

SC-8.5.

Delete paragraph 8.5. of the General Conditions in its entirety.

ARTICLE 9 - ENGINEER'S STATUS DURING CONSTRUCTION

SC 9.3

Add a new paragraph immediately after paragraph 9.3. of the General Conditions which is to read as follows:

9.3.1 Engineer will furnish a Resident Project Representative (Resident Engineer) and assistants to assist Engineer in observing the performance of the Work. The duties and responsibilities of the Resident Engineer will be as enumerated in a document entitled "Duties, Responsibilities and Limitations of the Authority of Resident Project Representative" and will be made available to Contractor at the start of Work.

SC 9.4

Add a new paragraph immediately after paragraph 9.4. of the General Conditions which is to read as follows:

9.4.1 Engineer's interpretations will be made in accordance with Mass. General Law, Chapter 30, Section 30P, which is included in Part II of the Supplementary Conditions.

ARTICLE 11 - CHANGE OF CONTRACT PRICE

SC 11.4.

Delete the fourth sentence in paragraph 11.4.1. of the General Conditions in its entirety and replace with the following:

Such employees shall include foremen at the site.

Delete paragraph 11.4.5.9 of the General Conditions in its entirety and replace with the following:

11.6.2.1: for costs incurred under paragraphs 11.4.1, 11.4.2, 11.4.5.3, and 11.4.5.9, the Contractor's fee shall be fifteen percent (15%).

In the second line of paragraph 11.6.2.2., before the semi-colon, add the following words:

"based on Subcontractor's Cost of the Work";

Delete paragraph 11.6.2.3. of the General Conditions in its entirety and replace with the following:

11.6.2.3. No fee shall be payable on the basis of costs itemized under paragraphs 11.4.4, 11.4.5, except as noted above and 11.5.

SC-11.8.

Delete Article 11.8. of the General Conditions in its entirety.

ARTICLE 12 - CHANGES OF CONTRACT TIME

SC-12.4.

Add the following new paragraph at the end of paragraph 12.3. of the General Conditions which is to read as follows:

12.4. If the Contractor shall fail to complete the Work within the Contract Time, or extension of time granted by the Owner, the Contractor will pay to Owner the amount for liquidated damages as per paragraph 12.3. above and as specified in the Bid for each calendar day that the Contractor shall be in default after the time stipulated in the Contract Documents.

ARTICLE 13 - WARRANTY & GUARANTEE; TESTS & INSPECTIONS; CORRECTIONS; REMOVAL OR ACCEPTANCE OF DEFECTIVE WORK

SC-13.1.

Delete paragraph 13.1. of the General Conditions in its entirety and insert the following in its place.

13.1. The Contractor guarantees that the Work and services to be performed under the Contract, and all workmanship, materials and equipment performed, furnished, used or installed in the construction of the same shall be free from defects and flaws, and shall be performed and furnished in strict accordance with the Drawings, Specifications, and other Contract Documents, that the strength of all parts of all manufactured equipment shall be adequate and as specified and that the performance test requirements of the Contract shall be fulfilled. This guarantee shall be for a period of one year form and after the date of completion and acceptance of the Work, as stated in the final estimate. If part of the Work is accepted in accordance with that sub-section of the Agreement titled "Partial Acceptance", the grantee for that part of the work shall be for one year from the date fixed for such acceptance. If at any time within the said period of guarantee any part of the Work requires repairing, correction or replacement, the Owner may notify Contractor, in writing, to make the required repairs, corrections or replacements. If the Contractor neglects to commence making such repairs, corrections or replacements to the satisfaction of the Owner within three (3) days from the date of receipt of such notice, or having

commenced, fails to prosecute such work with diligence, the Owner may employ other persons to make said repairs, corrections or replacements, including compensation for additional professional services, shall be paid by the Contractor.

ARTICLE 14 - PAYMENTS TO THE CONTRACTOR AND COMPLETION

SC-14.2.

Amend the first sentence of paragraph 14.2. of the General Conditions by striking out the word "twenty" and inserting the word "thirty" in its place, and so amended, paragraph 14.2 remains in effect.

SC-14.3.

Add two new paragraphs immediately after paragraph 14.3. of the General Conditions which are to read as follows:

14.3.1. No materials or supplies for the work shall be purchased by Contractor or Subcontractor subject to any chattel mortgage or under a conditional sales contract or other agreement by which an interest is retained by the seller. Contractor warrants that he has good title to all materials and supplies used by him in the Work, free from all liens, claims or encumbrances.

14.3.2. Contractor shall indemnify and save Owner harmless from all claims growing out of the lawful demands of Subcontractors, laborers, workmen, mechanics, materialmen, and furnishers of machinery and parts thereof, equipment, power tools and all supplies, including commissary, incurred in the furtherance of the performance of this contract. Contractor shall, at Owner's request, furnish satisfactory evidence that all obligations of the nature hereinabove designated have been paid, discharged, or waived. If Contractor fails to do so, the Owner may, after having served written notice, direct or withhold from Contractor's unpaid compensations, a sum of money deemed reasonably sufficient to pay any and all such lawful claims until satisfactory evidence is furnished that all liabilities have been fully discharged whereupon payment to Contractor shall be resumed, in accordance with the terms of this Contract, but in no event shall be provisions of this sentence be construed to impose any obligations upon Owner to either Contractor or his Surety. In paying any unpaid bills of the Contractor, Owner shall be deemed the agent of Contractor and any payment so made by Owner shall be considered as payment made under the Contract by Owner to Contractor and Owner shall not be liable to Contractor for any such payment made in good faith.

SC-14.4.

Delete paragraph 14.4. of the General Conditions in its entirety and insert the following in

its place:

14.4. Progress Payments will be made in accordance with Massachusetts General Law, Chapter 30, Section 39G, which is deemed to be inserted as part of these Contract Documents.

SC-14.7.

Add the following language at the end of paragraph 14.7. of the General Conditions:

Contractor shall make payments to Subcontractors in accordance with Mass. General Law, Chapter 30, Section 39F, which is deemed to be included as part of these Contract Documents.

SC-14.13.

Delete paragraph 14.13. of the General Conditions in its entirety and insert the following in its place:

14.13. If, on the basis of Engineer's observation of the Work during construction and final inspection, and Engineer's review of the final Application for Payment and accompanying documentation, all as required by the Contract Documents, Engineer is satisfied that the Work has been completed and Contractor's other obligations under this Contract Documents have been fulfilled, Engineer will indicated in writing his recommendation of payment and present the Application to Owner for payment. Thereupon Engineer will give written notice to Owner and Contractor that the Work is acceptable subject to the provisions of paragraph 14.16. Otherwise, Engineer will return the Application to Contractor, indicating in writing the reasons for refusing to recommend final payment, in which case, Contractor shall make the necessary corrections and resubmit the Application. If the Application and accompanying documentation are appropriate as to form and substance, Owner shall, in accordance with the applicable Mass. General Law, pay Contractor the amount recommended by the Engineer.

ARTICLE 15 - SUSPENSION OF WORK AND TERMINATION

SC-15.1.

Delete paragraph 15.1. of the General Conditions in its entirety and insert the following in its place:

15.1. Owner may order, at any time and without cause, suspension of the Work in accordance with Massachusetts General Law, Chapter 30, Section 39O, which is deemed inserted as part of these Contract Documents.

SC-15.2.

Add a new paragraph immediately after paragraph 15.2.9. of the General Conditions which is to read as follows:

15.2.10. If the Work to be done under this Contract shall be abandoned, or if this Contract or any part thereof shall be sublet, without the previous written consent of Owner, or if the Contract or any claim thereunder shall be assigned by Contractor otherwise than as herein specified, or at any time Engineer shall certify in writing to Owner that the rate of progress of the Work or any part thereof is unsatisfactory or that the Work or any part thereof is unnecessarily or unnecessarily delayed,

ARTICLE 16 - ARBITRATION

Change the title of this Article from "Arbitration" to "Disputes Between Owner and Contractor".

SC-16.1, 16.2, 16.3, and 16.4.

Delete paragraphs 16.1., 16.2., 16.3., and 16.4. of the General Conditions in their entirety and replace with the following new paragraphs to read as follows:

ARTICLE 16 - DISPUTES BETWEEN OWNER AND CONTRACTOR

16.1. All claims, disputes, and other matters in question between Owner and Contractor arising out of , or relating to the Contract Documents or the breach thereof, which the parties are unable to settle between themselves, (except for claims which have been waived by the making or acceptance of final payment as provided by paragraph 14.16) will be decided through legal means by filing a complaint in the Superior Court, in accordance with Mass. General Laws.

16.2 Arbitration will not be used as a method for resolving disputes and other issued described in paragraph 16.1.

16.3 No complaint in the Superior Court, or any claim, disputes or other matter that is required to be referred to Engineer initially for decision in accordance with paragraph 9.11, will be filed until the earlier of (a) the date on which Engineer has rendered a decision or (b) the tenth day after the parties have presented their evidence to Engineer if a written decision has not been rendered by Engineer before that date.

No complaint in the Superior Court on any such claim or dispute or other matter will be filed later than thirty days after the date on which the Engineer has rendered a written decision in respect thereof in accordance with paragraph 9.11; an in the failure to initiate

legal proceeding within said thirty day period shall result in Engineer's decision being final and binding upon Owner and Contractor. If Engineer renders a decision after the legal proceeding have been initiated, such decision may be entered as evidence but will not supersede the legal proceedings, except where the decision is acceptable to the parties concerned.

16.4. The Contractor shall carry on the Work and maintain the progress schedule during the legal proceedings unless otherwise agreed in writing by the Owner and Contractor.

ARTICLE 17 - MISCELLANEOUS

SC-17.5.

Add a new paragraph immediately after paragraph 17.4. of the General Conditions which is to read as follows:

17.5. Both the address given in the Bid Form upon which the Agreement is founded and the Contractor's office at or near the site of the Work are hereby designated as places to either of which notices, letters, and other communications to Contractor shall be certified, mailed or delivered. The delivering at the above named place or depositing in a post paid wrapper directed to first-named place, in any post office box regularly maintained by the Post Office of any notice, letter or other communication to Contractor shall be deemed sufficient service thereof upon Contractor; and the date of said service shall be the date of such delivery or mailing. The first-named address may be changed at any time by an instrument in writing, executed and acknowledged by the Contractor, and delivered to Owner and Engineer. Notice herein contained shall be deemed to preclude or render inoperative the service of any notice, letter or other communications upon Contractor personally.

SC-17.6

Add the following new paragraphs immediately after paragraph 17.5. of the Supplementary Conditions:

17.6. The requirements and provisions of all applicable laws and any amendments thereof or additions thereto as to the employment of labor, and to the schedule of minimum wage rates established in compliance with laws shall be a part of these Contract Documents. If, after the Notice of Award, it becomes necessary to employ any person in a trade or occupation not classified in the wage determinations, such person shall be paid at not less than such rates as shall be determined by the officials administrating the laws mentioned above. Such approved minimum rate shall be retroactive to the time of the initial employment of such person in such trade or occupation. Contractor shall notify Owner of his intention to employ persons in trades or occupations not classified in sufficient time for

Owner to obtain approved rates for such trades or occupations.

17.6.1. The schedule of wages referred to above are minimum rates only, and Owner will not consider any claims for additional compensation made by Contractor because of payment by Contractor of any wage rate in excess of the applicable rate contained in these Contract Documents. All disputes in regard to the payment of wages in excess of these specified in the schedule shall be resolved by the Contractor.

17.6.2. The said schedule of wages shall continue to be the minimum rates to be paid during the life of this Agreement and a legible copy of said schedule shall be kept posted in a conspicuous place at the site of the Work.

17.6.3. A copy of the State Minimum Wage Rates relevant to this project is included in this project manual as Appendix "A".

17.6.4. Requirements of the Prevailing Wage Law are provided in Part II of the Supplementary Conditions.

DOCUMENT 00811
SPECIAL PROVISIONS
MONTHLY PRICE ADJUSTMENT FOR HOT MIX ASPHALT (HMA) MIXTURES
ENGLISH UNITS
Revised: 02/02/2009

This provision applies to all projects using greater than 100 tons of hot mix asphalt (HMA) mixtures containing liquid asphalt cement as stipulated in the Notice to Contractors section of the bid documents.

The Price Adjustment will be based on the variance in price for the liquid asphalt component only from the Base Price to the Period Price. It shall not include transportation or other charges. This Price Adjustment will occur on a monthly basis.

Base Price

The Base Price of liquid asphalt on a project as listed in the Notice to Contractors section of the bid documents is a fixed price determined at the time of bid by the Department by using the same method as for the determination of the Period Price detailed below.

Period Price

Please note that, starting December 15, 2008, two sets of period prices will be posted each month on the MassHighway website at http://www.mhd.state.ma.us/. They will be labeled "New Asphalt Period Price Method" and "Old Asphalt Period Price Method".

New Asphalt Period Price Method

The "New Asphalt Period Price Method" is for contracts bid after December 15, 2008 and will show the Period Price of liquid asphalt for each monthly period as determined by MassHighway using the average selling price per standard ton of PG64-28 paving grade (primary binder classification) asphalt, FOB manufacturer's terminal, as listed under the "East Coast Market - New England, Boston, Massachusetts area" section of the Poten & Partners, Inc. "Asphalt Weekly Monitor". This average selling price is listed in the issue having a publication date of the second Friday of the month and will be posted as the Period Price for that month. MassHighway will post this Period Price on this website within two (2) business days following their receipt of the relevant issue of the "Asphalt Weekly Monitor". Poten and Partners has granted MassHighway the right to publish this specific asphalt price information sourced from the Asphalt Weekly Monitor.

Old Asphalt Period Price Method

The "Old Asphalt Period Price Method" Period Price will be for contracts bid on or before December 15, 2008 and will contain liquid asphalt prices as determined by the old or previous method. These prices will continue to be posted on MassHighway's website until all contracts using the "Old Asphalt Period Price Method" Period Price have been closed.

New and Old Asphalt Period Price Methods

The paragraphs below apply to both the New and the Old Asphalt Period Price Methods.

The Contract Price of the hot mix asphalt mixture will be paid under the respective item in the Contract. The price adjustment, as herein provided, upwards or downwards, will be made after the work has been performed, using the monthly period price for the month during which the work was performed.

The Price Adjustment applies only to the actual virgin liquid asphalt content in the mixture placed on the job in accordance with the Standard Specifications for Highways and Bridges, Division III, Section M3.11.03.

The Price Adjustment will be a separate payment item. It will be determined by multiplying the number of tons of hot mix asphalt mixtures placed during each monthly period times the liquid asphalt content percentage times the variance in price between Base Price and Period Price of liquid asphalt.

This Price Adjustment will be paid only if the variance from the Base Price is 5% or more for a monthly period. The complete adjustment will be paid in all cases with no deduction of the 5% from either upward or downward adjustments.

No Price Adjustment will be allowed beyond the Completion Date of this Contract, unless there is a Department-approved extension of time.

******** END OF DOCUMENT ********

DOCUMENT 00812

SPECIAL PROVISIONS
MONTHLY PRICE ADJUSTMENT FOR DIESEL FUEL AND GASOLINE – ENGLISH UNITS

Revised: 01/26/2009

This monthly fuel price adjustment is inserted in this contract because the national and worldwide energy situation has made the future cost of fuel unpredictable. This adjustment will provide for either additional compensation to the Contractor or repayment to the Commonwealth, depending on an increase or decrease in the average price of diesel fuel or gasoline.

This adjustment will be based on fuel usage factors for various items of work developed by the Highway Research Board in Circular 158, dated July 1974. These factors will be multiplied by the quantities of work done in each item during each monthly period and further multiplied by the variance in price from the Base Price to the Period Price.

The Base Price of Diesel Fuel and Gasoline will be the price as indicated in the Department's web site (www.mhd.state.ma.us) for the month in which the contract was bid, which includes State Tax.

The Period Price will be the average of prices charged to the State, including State Tax for the bulk purchases made during each month.

This adjustment will be effected only if the variance from the Base Price is 5% or more for a monthly period. The complete adjustment will be paid in all cases with no deduction of the 5% from either upward or downward adjustments.

No adjustment will be paid for work done beyond the extended completion date of any contract.

Any adjustment (increase or decrease) to estimated quantities made to each item at the time of final payment will have the fuel price adjustment figured at the average period price for the entire term of the project for the difference of quantity.

The fuel price adjustment will apply only to the following items of work at the fuel factors shown:

ITEMS COVERED	**FUEL FACTORS**	
	Diesel	**Gasoline**
Excavation: and Borrow Work: Items 120, 120.1, 121, 123, 124, 125, 127, 129.3, 140, 140.1, 141, 142, 143, 144., 150, 150.1, 151 and 151.1 (Both Factors used)	0.29 Gallons / CY.	0.15 Gallons / CY
Surfacing Work: All Items containing Hot Mix Asphalt	2.90 Gallons / Ton	Does Not Apply

******** END OF DOCUMENT ********

DOCUMENT 00814

SPECIAL PROVISIONS
PRICE ADJUSTMENT FOR PORTLAND CEMENT CONCRETE MIXES

January 12, 2009

This provision applies to all projects using greater than 100 Cubic Yards (76 Cubic Meters) of Portland cement concrete containing Portland cement as stipulated in the Notice to Contractors section of the Bid Documents. This Price Adjustment will occur on a monthly basis.

The Price Adjustment will be based on the variance in price for the Portland cement component only from the Base Price to the Period Price. It shall not include transportation or other charges.

The Base Price of Portland cement on a project is a fixed price determined at the time of bid by the Department by using the same method as for the determination of the Period Price (see below) and found in the Notice to Contractors.

The Period Price of Portland cement will be determined by using the latest published price, in dollars per ton (U.S.), for Portland cement (Type I) quoted for Boston, U.S.A. in the **Construction Economics** section of *ENR Engineering News-Record* magazine or at the ENR website http://www.enr.com under **Construction Economics**. The Period Price will be posted on the MassHighway website the Wednesday immediately following the publishing of the monthly price in ENR, which is normally the first week of the month.

The Contract Price of the Portland cement concrete mix will be paid under the respective item in the Contract. The price adjustment, as herein provided, upwards or downwards, will be made after the work has been performed, using the monthly period price for the month during which the work was performed.

The price adjustment applies only to the actual Portland cement content in the mix placed on the job in accordance with the Standard Specifications for Highways and Bridges, Division III, Section M4.02.01. No adjustments will be made for any cement replacement materials such as fly ash or ground granulated blast furnace slag.

The Price Adjustment will be a separate payment item. It will be determined by multiplying the number of cubic yards of Portland cement concrete placed during each monthly period times the Portland cement content percentage times the variance in price between the Base Price and Period Price of Portland cement.

This Price Adjustment will be paid only if the variance from the Base Price is 5% or more for a monthly period. The complete adjustment will be paid in all cases with no deduction of the 5% from either upward or downward adjustments.

No Price Adjustment will be allowed beyond the Completion Date of this Contract, unless there is a Department-approved extension of time.

****
*

END OF DOCUMENT

SUPPLEMENTARY CONDITIONS - PART II

ARTICLE 1 STATUTORY REQUIREMENTS IN GENERAL

1.1 The Contractor shall keep himself fully informed of all existing and future State and Federal Laws and Municipal Ordinances and Regulations in any manner affecting those engaged or employed in the work or in any way affecting the conduct of the work, and of all such orders and decrees of bodies or tribunals having jurisdiction or authority over same and of all provisions required by law to be made a part of this contract, all of which provisions are hereby incorporated by reference and made a part thereof. If any discrepancy or inconsistency is discovered in the drawings or specifications or contract documents for this work in relation to any such law, ordinance, regulation, order or decree, he shall forthwith report the same to the Engineer in writing. He shall at all times himself observe and comply with, and shall cause all his agents and employees to observe and comply with, all such existing and future laws, ordinances, regulations, orders and decrees; and he shall protect and indemnify the City and Engineer and all of its and their officers, agents and servants against any claim of liability arising from or based on the violation of any such law, ordinance, regulation, order or decree, whether by himself or his employees or sub-contractors.

1.2 All materials furnished and work done are to comply with all State, Federal and local laws and regulations.

1.3 All applicable laws, ordinances, and rules and regulations of all authorities having jurisdiction over the construction of the project shall apply to the contract throughout.

ARTICLE 2 DELETED

ARTICLE 3 DELETED

ARTICLE 4 SAFETY AND HEALTH REGULATIONS

4.1 The Successful Bidder shall comply with the Department of Labor Safety and Health Regulations for Construction promulgated under the Occupational Safety and Health Act of 1970 (PS-91-569) and under Section 107 of the Contract Work Hours and Safety Standards Act (PL-91-54).

4.2 This project is subject to the Safety and Health Regulations of the Massachusetts Department of Labor and Industries, Division of Industrial Safety "Rules and Regulations for the Prevention of Accidents in Construction Operations (Chapter

454 CMR, 10.0 et. seq.)".

4.3 This project is subject to all of the Safety and Health Regulations (CFR, Part 1926, and all subsequent amendments) as promulgated by the U.S. Department of Labor on June 24, 1974 and CFR 29, Part 1910, General Industry Safety and Health Regulations Identified as Applicable to Construction.

4.4 The Successful Bidder shall have a competent person or persons, as required under the Occupational Safety and Health Act on the site to inspect the work and to supervise the conformance of the work with the regulations of the Act.

4.5 All excavations within public or private ways are subject to the requirements of the Massachusetts General Law, Acts of 1983, Chapter 353, included in Part II of the Supplementary Conditions.

ARTICLE 5 PERMITS AND LICENSES

5.1 Deleted

5.2 The Contractor shall procure all permits and licenses required, pay all charges and fees therefore, and shall give all notices necessary and incidental to the due and lawful prosecution of the Project. The cost thereof shall be included n the prices bid for the various items listed in the proposal.

The permits shall also include all building and other permits required for his equipment, work force or particular operations (such as blasting or local street opening permits), in the performance of the work.

ARTICLE 6 CHANGE ORDERS

6.1 Change Orders will be completed by the Contractor using the form enclosed on the following page. The City will <u>not</u> accept any other form as a substitute.

(continued on next page)

[illegible] Quincy, MA 02169

Fax #: 376-1074

CHANGE ORDER/AMENDMENT # _____

Made in Quintuplicate this day(DATE) _____ between the City of Quincy, Massachusetts, a Municipal Corporation, within the County of Norfolk, Party of the first part and:(print name & address of Company below)

Party of the second part.

WITNESSETH: That for and in consideration of the following mutual covenants contained herein the parties agree to amend Contract #_____ of the City of Quincy, dated _____ between the same parties as follows:

ARTICLE I: In Article I, we are INCREASING/DECREASING the Contract by $_____ because:(LIST BELOW REASON)
Justification: _____

ARTICLE II: In Article II of the Contract for (SPECIFY COMMODITY) _____

between the same parties, strike out the words and figures $_____

_____
AMOUNT IN WORDS

and substitute the words and figures $_____

_____
AMOUNT IN WORDS

WITNESS:

CITY OF QUINCY

_____
WITNESS(CITY OF QUINCY)

_____
MAYOR

Sufficient funds are available to cover this contract in the account to be charged.

_____
CITY SOLICITOR

_____
CITY AUDITOR

_____
PURCHASING AGENT

_____
VENDOR SIGNATURE

DEPT: _____

P. O. #: _____

_____
COMMISSIONER OF PUBLIC WORKS

CODE: _____

00850-3

ARTICLE 7

SUPPLEMENTARY CONDITIONS - COMMONWEALTH OF MASSACHUSETTS

INDEX

	Page No.
SUB-ARTICLE 1 - Method of Paying Subcontractors MGL C. 30; s. 39F	850 - 5
SUB-ARTICLE 2 - Method of Paying General Contractors Completion of Public Works: Semi-Final and Final Estimates: Payments: Extra Work Disputed Items, MGL C. 30, S. 39G) . . .	850 - 7
SUB-ARTICLE 3 - Claims for Unforeseen Conditions (MGL C.30, S. 39N)	850 - 9
SUB-ARTICLE 4 - Claims for Delay (MGL C.30, Section 390)	850 -10
SUB-ARTICLE 5 - Decisions and Approvals by Engineer or Architect (MGL C30, S.39P)	850 -11
SUB-ARTICLE 6 - Preference in Employment, Wages (MGL C.149, s.26)	Deleted
SUB-ARTICLE 7 - Hours of Work (MGL C.149, s.34)	850 -11
SUB-ARTICLE 8 - Work by Foreign Corporations	850 -12
SUB-ARTICLE 9 - Minimum Wage Rates (MGL C. 149, s. 26-27D)	850 -12
SUB-ARTICLE 10 - Record Keeping (MGL C. 30, S. 39R)	850 -21

SUB-ARTICLE 1. METHOD OF PAYING SUBCONTRACTORS
(General Laws: Chapter 30, Section 39F, as most recently amended by Chapter 579 of the Acts of 1980).

(1) Every contract awarded pursuant to section forty-four A to H, inclusive of chapter one hundred and fort-nine shall contain the following subparagraphs (a) through (i) and every contract awarded pursuant to section thirty-nine M of chapter thirty shall contain the following subparagraphs (a) through (h) and in each case those subparagraphs shall be binding between the general contractor and each subcontractor.

(a) Forthwith, after the general contractor receives payment on account of a periodic estimate, the general contractor shall pay to each subcontractor the amount paid for the labor performed and the materials furnished by the subcontractor, less any amount specified in any court proceedings barring such payment and also less any amount claimed due from the subcontractor by the general contractor.

(b) No later than the sixty-five days after each subcontractor substantially completes his work in accordance with the plans and specifications, the entire balance due under the subcontract less amounts retained by the awarding authority as the estimated cost of completing the incomplete and unsatisfactory items of work, shall be due the subcontractor, and the awarding authority shall pay that amount to the general contractor. The general contractor shall forthwith pay to the subcontractor the full amount received from the awarding authority less any amount specified in any court proceedings barring such payment and also less any amount claimed due from the subcontractor by the general contractor.

(c) Each payment made by the awarding authority to the general contractor pursuant to subparagraphs (a) and (b) of this paragraph for the labor performed and the materials furnished by a subcontractor shall be made to the general contractor for the account of that subcontractor' and the awarding authority shall take reasonable steps to compel the general contractor to make each such payment to each such subcontractor. If the awarding authority has received a demand for a direct payment from a subcontractor for any amount which has already been included in a payment to the general contractor or which is to be included in included in a payment to the general contractor for payment to the subcontractor as provided in subparagraphs (a) and (b), the awarding authority shall act upon the demand as provided in this section.

(d) If, within seventy days after the subcontractor has substantially completed the subcontract work, the subcontractor has not received from the general contractor the balance due under the subcontract including any amount due for extra labor and materials

furnished to the general contractor, less any amount retained by the awarding authority as the estimated cost of completing the incomplete and unsatisfactory items of work, the subcontractor may demand by a sworn statement delivered to or sent by certified mail to the awarding authority, and a copy shall be delivered to or sent by certified mail to the general contractor at the same time. The demand shall contain a detailed breakdown of the balance due under the subcontract and also a statement of the status of completion of the subcontract work. Any demand made after substantial completion of the subcontract work shall be valid even if delivered or mailed prior to the seventieth day after the subcontractor has substantially completed the subcontract work. Within ten days after the subcontractor has delivered or so mailed the demand to the awarding authority and delivered or so mailed a copy to the general contractor, the general contractor may reply to the demand.

The reply shall be by a sworn statement delivered to or sent by certified mail to the awarding authority and a copy shall be delivered to or sent by certified mail to the subcontractor at the same time. The reply shall contain a detailed breakdown of the balance due under the subcontract including any amount due for extra labor and materials furnished to the general contractor and of the amount due for each claim made by the general contractor against the subcontractor.

(e) Within fifteen days after receipt of the demand by the awarding authority, but in no event prior to the seventieth day after substantial completion of the subcontract work, the awarding authority shall make direct payment to the subcontractor of the balance due under the subcontract including any amount due for extra labor and materials furnished to the general contractor, less any amount (i) retained by the awarding authority as the estimated cost of completing the incomplete or unsatisfactory items of work, (ii) specified in any court proceedings barring such payment, or (iii) disputed by the general contractor in the sworn reply; provided, that the awarding authority shall not deduct from a direct payment any amount as provided in part (iii) if the reply is not sworn to, or for which the sworn reply does not contain the detailed breakdown required by subparagraph (d). The awarding authority shall make further direct payment to the subcontractor forthwith after the removal of the basis for deductions from the direct payments made as provided in parts (i) and (ii) of the subparagraph.

(f) The awarding authority shall forthwith deposit the amount deducted from a direct payment as provided in part (iiii) of subparagraph (e) in an interest-bearing joint account in the names of the general subcontractor and the subcontractor in a bank in Massachusetts selected by the awarding authority or agreed upon by the general contractor and the subcontractor and shall notify the general contractor and the subcontractor of the date of the deposit and the bank receiving the deposit. The bank shall pay the amount in the account, including accrued interest, as provided in an agreement between the general contractor and the subcontractor or as determined by a decree of a court of competent jurisdiction.

(g) All direct payments and all deductions for direct payments deposited in an interest-bearing bank account for accounts in a bank pursuant to subparagraph (f) shall be made out of amount payable to the general contractor at the time of receipt of a demand for direct payment from a subcontractor and out of amounts which later become payable to the general contractor and in the order of receipt of such demands from subcontractors. All direct payments shall discharge the obligation of the awarding authority to the general contractor to the extent of the such payment.

(h) The awarding authority shall deduct to a general contractor amount which, together with the deposits in interest-bearing accounts pursuant to subparagraph (f), are sufficient to satisfy all unpaid balances of demands for direct payment received from subcontractors. All such amounts shall be earmarked for such direct payments, and the subcontractors shall have a right in such deductions prior to any claims against such amounts by creditors of the general contractor.

(i) If the subcontractor does not receive payment as provided in subparagraph (a) or if the general contractor does not submit a periodic estimate for the value of the labor or materials performed or furnished by the subcontractor and the subcontractor does not receive payment for same when due less the deductions provided for in subparagraph (a), the subcontractor may demand direct payment by the following procedure in subparagraph (d) and the general contractor may file a sworn reply as provided in that same subparagraph. A demand made after the first day of the month following that for which the subcontractor seeks payment shall be valid even if delivered or mailed prior to the time payment was due on a periodic estimate from the general contractor. Thereafter the awarding authority shall proceed as provided in subparagraph (e), (f), (g), and (h).

SUB-ARTICLE 2: COMPLETION OF PUBLIC WORKS: SEMI-FINAL AND FINAL ESTIMATES
PAYMENTS: EXTRA WORK: DISPUTED ITEMS

(General Laws, Chapter 30, Section 39G, as most recently amended by Chapter 460 of the Acts of 1978.)

Upon substantial completion of the work required by a contract with the Commonwealth, or any agency or political subdivision thereof, for the construction, reconstruction, alteration, remodeling, repair or improvement of public ways, including bridges, and other highway structures, sewers and watermains, airports and other public works, the contractor shall present to the contractor either a written declaration that the unsatisfactory work items required by the contract sufficient to demonstrate that the work has not been substantially completed. The awarding authority may include with such a list a notice setting forth a reasonable time, which shall not in any event be prior to the contract completion date, within which the contractor must achieve substantial completion of the work. In the event that the awarding authority fails to respond, by presentation of

a written declaration or itemized list as aforesaid, to the contractor's certification within the twenty-one day period the contractor's certification shall take effect as the awarding authority's declaration that the work has been substantially completed.

Within sixty-five days after the effective date of a declaration of a substantial completion, the awarding authority shall prepare and forthwith sent to the contractor for acceptance a substantial completion estimate for the quantity and price of work done and all but one percent retainage for the undisputed part of each work item and extra work item in dispute by excluding the disputed part thereof, less the estimated cost of completing all incomplete and unsatisfactory work items and less the total periodic payments made to date for the work. The awarding authority also shall deduct form the substantial completion estimate an amount equal to the sum of all demands for direct payments filed by the subcontractors and not yet paid to subcontractors or deposited in a joint account pursuant to section thirty-nine F, but no contract subject to said section thirty-nine F shall contain any other provision authorizing the awarding authority to deduct any amount by virtue of claims asserted against the contract by subcontractors, material suppliers or others.

If the awarding authority fails to prepare and send to the contractor any substantial completion estimate required by this section on or before the date herein above set forth, the awarding authority will pay to the contractor interest on the amount which would have been due to the contractor pursuant to such substantial completion estimate at the rate of three percentage points above the rediscount rate then charged by the Federal Reserve Bank of Boston from such date to the date on which the awarding authority sends that substantial completion estimate to the contractor for acceptance or to the date of payment therefor, whichever occurs first. The awarding authority shall include the amount of such interest in the substantial completion estimate.

Within fifteen days after the effective date of the declaration of substantial completion, the awarding authority shall send to the contractor by certified mail, return receipt requested, a complete list of all incomplete or unsatisfactory work items, and, unless delayed by causes beyond his control, the contractor shall complete all such work items within forty-five days after the receipt of such list or before the then contract completion date, whichever is later. If the contractor fails to complete such work within such time, the awarding authority may, subsequent to seven days' written notice to the contractor by certified mail, return receipt requested, terminate the contract and complete the incomplete or unsatisfactory work items and charge the cost of same to the contractor.

Within thirty days after receipt by the awarding authority of a notice from the contractor stating that all of the work required by the contract has been completed, the awarding authority shall prepare and forthwith send to the contractor for acceptance a final estimate for the quantity and price of the work done and all retainage on that work less all payments made to date, unless the awarding authority's inspection shows that work items

required by the contract remain incomplete or unsatisfactory, or that documentation required by the contract has not been complete. If the awarding authority fails to prepare and send to the contractor the final estimate within thirty days after receipt of notice of completion, the awarding authority shall pay to the contractor interest on the amount which would have been due to the contractor pursuant to such final estimate at the rate hereinabove provided from the thirtieth day after such completion until the date on which the awarding authority sends the final estimate to the contractor for acceptance or the date of payment therefore, whichever occurs first, provided that the awarding authority's inspection whose that not work items required by the contract remain for which interest is required to be paid in connection with the substantial completion estimate as hereinabove provided. The awarding authority shall include the amount of the interest required to be paid hereunder in the final estimate.

The awarding authority shall pay the amount due pursuant to any periodic substantial or final estimate within thirty-five days after receipt of written acceptance for such estimate form the contractor and shall pay interest in the amount due pursuant to such estimate at the rate hereinabove provided from that thirty-fifty day to the date of payment. In the case of periodic payment, the contracting authority may deduct from its payment a retention based on its estimate of the fair value of its claims against the contractor, a retention for direct payments to subcontractors based on demand for same in accordance with the provisions of section thirty-nine F, and a retention to secure satisfactory performance of the contractual work not exceeding five percent of the approved amount of any periodic payment, and the same right to retention shall apply to bonded subcontractors entitled to direct payment under section thirty-nine F of chapter thirty, provided, that a five percent value of all items that are planted in the ground shall be deducted from the periodic payments until final acceptance.

No periodic, substantial completion or final estimate or acceptance or payment thereof shall bar a contractor from reserving all rights to dispute the quantity and amount of, or the failure of the awarding authority to approve a quantity and amount of, all or part of any work item or extra work item.

Substantial completion, for the purposes of this section, shall mean either that the work required by the contract has been completed except for work having a contract price of less than one percent of the then adjusted total contract price, or substantially all of the work has been completed and opened to public used except for minor incomplete or unsatisfactory work items that doe not materially impair the usefulness of the work required by the contract.

SUB-ARTICLE 3: CLAIMS FOR UNFORESEEN CONDITIONS

(General Laws, Chapter 30, Section 29N, as most recently amended by Chapter 774 of the Acts of 1972.)

Every contract subject to section forty-four A of chapter one hundred and forty-nine or subject to section thirty-nine M shall contain the following paragraph in its entirety and an awarding authority may adopt reasonable rules or regulations in conformity with that paragraph concerning the filing, investigations and settlement of such claim:

If, during the progress of the work, the contractor or awarding authority discovers that the actual sub-surface or latent physical conditions encountered at the site differ substantially or materially from those shown on the plans or indicated in the contract documents either the contractor or the contracting authority may request an equitable adjustment in the contract price of the contract applying to work affected by the differing site conditions. A request for such an adjustment shall be in writing and shall make an investigation of such physical conditions, and, if they differ substantially or materially from those shown on the plans or indicated int he contract documents or from those ordinarily encountered and generally recognized as inherent in work of the character provided for in the plans and contract documents and are of such a nature as to cause an increase or decrease in the cost of performance of the work or a change in the construction methods required for the performance of the work which results in an increase or decrease in the cost of the work, the contracting authority shall make an equitable adjustment in the contract price and the contract shall be modified in writing accordingly.

SUB-ARTICLE 4: CLAIMS FOR DELAY
(General laws, Chapter 30, Section 390, as added by Chapter 116 of the Acts of 1973).

Every contract subject to the provisions of section thirty nine M of this chapter or subject ot section forty-four A of chapter one hundred forty-nine shall contain the following provisions (a) and (b) in their entirety and, in the event a suspension, delay, interruption or failure toact of the awarding authority increases the cost of performance to any subcontract, that subcontractor shall have the ame rights against the general contractor for payment for an increase in the cost of his performance as provisions (a) and (b) give the general contractor agaist the awarding authority, but nothing in provisions (a) and (b) shall in any way change, modify or alter any other rights which the general contractor or the subcontractor may have against each other.

(a) The awarding authority may order the general contractor in wirting to suspend, delay, or interrupt all or any part of the work for such period of time as it may determine to be appropriate for the convenience of the awarding authority: provided, however, that if there is a suspension, delay, or interruption for fifteen days or maore or due to a failure of the awarding authority to act within the time specified in the contract, the awarding authority shall made an adjustment in the contract price for any increase in the cost of performance of this contract but shall not include any profit to the general contractor on such increase and provided further, that the awarding authority shall not make any ajdustment in the contract price under this provision for any suspension, delay,

interruption, or failure to act to the extent that such is due to any cause for which this contract provides for an equitable adjustment of the contract price under any other contract provisions.

(b) The general contractor must submit the amount of a claim under provision (a) to the awarding authority in writing, as soon as practicable after the end of the suspension, delay, interruption or failure to act, and in any event, no later than the date of final payment under this contract and, except for costs due to suspension order, the awarding authority shall not approve any costs in the claim incurred more than twiety days before the general contractor notified the awarding authority in writing of the act of fialure to act involved in the claim.

SUB-ARTICLE 5. DECISIONS AND APPROVALS BY THE ENGINEER OR ARCHITECT
(Mass. General Law, Chapter 30, Section 39P, as added by Chapter 116 of the Acts of 1973.)

Every contract subject to section thirty-nine M of this chapter or section forty-four A of chapter one hundred forty-nine, which requires the awardign authority, any official, its architect or engineer to make a decision on interpretations of the specifications, approval of equipment, materials or any other approval, or progress of the work, shall require that the decision be made promptly and in any event, no later than thirty days after the written submission for decision; but if such decision requires extended investigation and study, the awarding authority, the official, architect or engineer shall, within thirty days after receipt of the submission, give the party making the submission written notice of the reasons why the decision cannot be made within the thirty day period and the date by which the decision will be made.

SUB-ARTICLE 6. PREFERENCE IN EMPLOYMENT

DELETED

SUB-ARTICLE 7. HOURS OF WORK
(Mass. General Laws, chpater 149, Section 34, as most recently amended by Chapter 680 of the Acts of 1947.)

Every contract, except for the purchase of material or supplies involving the employment of laborers, workmen, mechanics, foremen or inspectors, to which the Commonwealth or any county or town, subject to section thirty, is a party, shall contain a stipulation that no laborer, workman, mechanic, foreman or inspector working within the Commonwealth, in the employ of the contractor, subcontractoror other person doing or contracting to do the whole or a part of the work contemplated by the contract, shall be required or permitted to work more than eight hours in any one day or more than forty-eight hours in any one week, or more than six days in any one week, except in case of

emergency or in case any town subject to section thirty-one is a party to such a contract, more than eight hours in any one day, except as aforesaid, provided that in contracts entered in to by the Department of Public Works for the construction or reconstruction of highways there may be inserted in said stipulation a provision that said department, or any contractor or subcontractor for said department, any employ laborers, workmen, mechanics, foremen and inspectors for more than eight hours in any one day in such construction or reconstruction when, in the opinion of the Commissioner of Labor and Industries, public necessity so requires. Every such contract not containing the aforesaid stipulation shall be null and void.

SUB-ARTICLE 8. WORK BY FOREIGN CORPORATIONS

(Mass. General Laws, Chapter 30, Section 39L, Public Construction Work by Foreign Corporations, Restrictions and Reports)

The Commonwealth and every county, city, town, district, board, commission or other public body which, as the awarding authority, requests proposals, bids or sub-bids for any work in the construction, reconstruction, alteration, remodeling, repair or demolition of any public building or other public works (1) shall not enter into a contract for such work with, and shall not approve as a subcontractor furnishing labor and materials for a part of any such work, a foreign corporation which has not filed with such awarding authority a certificate of the state secretary stating that such corporation has complied with sections three and five of chapter one hundred and eighty-one and the date of such compliance, and (2) shall report to the state secretary and to the department of corporations and taxation any foreign corporation performing work under such contract or subcontract, and residing or having a principal place of business outside the Commonwealth.

SUB-ARTICLE 9. REQUIREMENTS OF THE PREVAILING WAGE LAW

I. GENERAL

1. Awarding authorities must fill out a Prevailing Wage Rate Request Form and mail it to the Department of Labor and Industries for each project going out to bid. Do not use rates that you may have on file, or from similar projects or from neighboring cities and towns.

2. The Department strives to process all Prevailing Wage Rate Requests within one business day of receipt. Once you have received the wage rates, it is your obligation to make them available to all prospective bidders.

3. The Prevailing Wage Rates shall become part of the contract signed between the low bidder and awarding authority or the contract shall be invalid.

4. Prevailing Wages must be paid to all persons employed on the public works project, regardless of whether they are employed by the low bidder or a subcontractor. The wage rates issued for each project shall be the rates paid for the entire project.

5. Payroll records must be kept for all persons employed on the project. A separate Statement of Compliance must be submitted to the Department of Labor and Industries by every employer, including all prime contractors and subcontractors, when its portion of the work is completed. The enclosed form (see Appendix A) entitled "Weekly Payroll Records Report & Statement of Compliance" clearly details these requirements.

6. Once prevailing wages have been issued for a project, the bid opening must occur within 90 days or the Prevailing Wages become invalid. If the bid opening does not occur within 90 days, the awarding authority shall once again request rates for the project.

7. If the awarding authorities have any questions regarding the Prevailing Wage Law, please reference the enclosed copy of Massachusetts General Law, c.149, s. 26 and 27. Additional questions may be directed to the Director of the Division of Occupational Statistics at (617) 727-3492.

II. MASSACHUSETTS GENERAL LAWS, Chapter 149, Section 26

1. Section 26. In the employment of mechanics and apprentices, teamsters, chauffeurs and laborers in the construction of public works by the Commonwealth, or by a county, town or district, or by persons contracting or subcontracting for such works, preference shall first be given to citizens of the Commonwealth who have been residents of the Commonwealth for at least six months at the commencement of their employment who are male veterans as defined in clause forty-three of Section seven of chapter four, and who are qualified to perform the work to which the employment relates, and secondly, to citizens of the Commonwealth generally who have been residents of the Commonwealth for at least six months at the commencement of their employment, and if they cannot be obtained in sufficient numbers, then to citizens of the United States, and every contract for such work shall contain a provision to this effect. Each county, town, or district in the construction of public works, or persons contracting or sub-contracting for such works, shall give preference to veterans and citizens who are residents of such county, town or district. The rate per hour of the wages paid to said mechanics and apprentices, teamsters, chauffeurs and laborers in the construction of public works shall not be less than the rate or rates of wages to be determined by the commissioner as hereinafter provided; provided, that the wages paid to laborers employed on said works shall not be less than those paid to laborers in the municipal service of the town or towns where said works are being constructed; provided further, that where the same public work is to be constructed in two or more towns, the wages paid to laborers shall not be less than those paid to laborers in the municipal service to the town paying the highest rate; provided, further that if, in any of the towns where the works are to be constructed, a wage rate or wage rates have been established in certain trades and occupations by collective agreements or understandings the rate or rates to be paid on said works shall not be less than the rates so established; provided further, that in towns where no such rate or rates have been so established, the wages paid to mechanics, teamsters, chauffeurs and laborers on public works, shall not be less than the wages paid to the employees in the same trades and occupations by private employers engaged in the construction industry. This section shall also apply to regular employees of the Commonwealth or of a county, town or district, when such employees are employed in the construction, addition to or alteration or public buildings for which special appropriations or more than one thousand dollars are provided. Payments by employers to health and welfare plans, pension plans and supplementary unemployment benefit plans under collective bargaining agreements or understandings between organized labor and employers shall be included for the purpose of establishing minimum wage rates as herein provided. Permanent and

temporary laborers employed by the State Department of Public Works and by the Metropolitan District Commission shall receive such salary or compensation as may be fixed under and in accordance with Sections Forty-five to Fifty, inclusive of Chapter 30.

Massachusetts General Laws, Chapter 149, Section 27

2. Section 27. The Commissioner shall prepare, for the use of such public officials or public bodies whose duty it shall be to cause public works to be constructed, a list of the several jobs usually performed on various types of public works upon which mechanics and apprentices, teamsters, chauffeurs and laborers are employed, including the transportation of gravel or fill to the site of said public works or the removal of surplus gravel or full from such site. The commissioner shall classify said jobs, and he may revise such classification from time to time, as he may deem advisable. Prior to awarding public body shall submit to the commissioner a list of the jobs upon which mechanics and apprentices, teamsters, chauffeurs and laborers are to be employed, and shall request the commissioner to determine the rate of wages to be paid on each job. Said rates shall apply to all persons engaged in transporting gravel or fill from such site, regardless of whether such persons are employed by a contractor or subcontractor or are independent contractors or owner-operators. The commissioner, subject to the provisions of section twenty-six, shall proceed forthwith to determine the same, and shall furnish said official or public body with a schedule of such rate or rates of wages as soon as said determination shall have been made. In advertising or calling for bids for said works, the awarding official or public body shall incorporate said schedule in the advertisement or call for bids by an appropriate reference thereto, and shall furnish a copy of said schedule, without cost, to any person requesting the same. Said schedule shall be made a part of the contract for said works and shall continue to be the minimum rate or rates of wages for said employees during the life of the contract. Any person engaged in the construction of said works shall cause a legible copy of said schedule to be kept posted in a conspicuous place at the site or said works during the life of the contract. The aforesaid rates of wages in the schedule of wage rates shall include payments by employers to healths and welfare plans, pension plans and supplementary unemployment benefit plans as provided in said section twenty-six, and such payment shall be considered as payments to persons under this section performing work as herein provided. Any employer engaged in the construction of such works who does not make payments to a health and welfare plan, a pension plan and a supplementary unemployment benefit plan, where such payments are included in said rates of wages, shall pay the amount of said payments directly to each employee engaged in said construction. Whoever shall pay less than said rate or rates of wages, including

payments to health and welfare funds and pension funds, or the equivalent payment in wages, on said works to any person performing work within classifications as determined by the commissioner, and whoever, for himself, or as representative, agent or officer or any other, shall take or receive for his own use or the use of any other person, as a rebate, refund, or gratuity, or in any other guise, any part or portion of the wages, including payments to health and welfare funds and pension funds, or the equivalent payment in wages, paid to any such person for work done or service rendered on said public works, shall be punished by a fine of not more than ten thousand dollars.

Offers of restitution or payment or restitution shall not be considered in imposing such punishment.

III. POLICY STATEMENT - APPLICABILITY OF PREDETERMINED WAGE RATES TO TEAMSTERS WHO PARTICIPATE IN THE ON-SITE INSTALLATION OF THE MATERIALS BEING DELIVERED: DATED June 26, 1993

SIGNED BY: Thomas F. Dengenis, Commissioner
Department of Labor & Industries
Commonwealth of Massachusetts

---

1. BACKGROUND: The Department of Labor and Industries (DLI) enforces the Commonwealth's predetermined wage rate law, commonly known as the "prevailing wage" law. the prevailing wage law applies to all state and local public works construction in the Commonwealth. The Commissioner of the Department of Labor and Industries (The Commissioner) is required to set a wage rate for all mechanics and apprentices, teamsters, chauffeurs and laborers employed "in the construction of public works" and "on said works".

   This policy statement will define when the predetermined wage must be paid to teamsters who participate in the on-site installation of the materials being delivered, including but not limited to, teamsters who are hauling and applying bituminous concrete or ready-mix concrete, and teamsters who are hauling and installing jersey barriers, on highway, road and other construction projects in the Commonwealth, excluding teamsters who only haul to and from the site.

2. AUTHORITY: This policy is based on Massachusetts General Law, Chapter 149, Sections 26, 27 and 27A through F, the Department's historical enforcement of the statute, and on the Supreme Judicial Court's decision in Construction Industries of Massachusetts v. Commissioner of Labor and Industries, 546 N.E. 2d 367, 406 Mass. 162 (1989)

3. SCOPE OF APPLICATION: This policy applies to all teamsters who participate in on-site installation of materials being delivered to state and local public works construction sites.

4. DEFINITIONS: "Bituminous concrete" is in general a mixture of fine sand and stone held together by a heavy crude oil which acts as glue. Bituminous concrete is generally referred to as asphalt. It ranges from coarse to fine depending on the size of the stone used in its manufacture. Several layers of bituminous concrete are used in the construction of roads and highways. These range from very coarse consistency in the lower levels to a fine layer on top. Sometimes an old road surface is ripped up, transported to the manufacturing plant and reprocessed, and then reapplied to the site. See C.I.M. v. Commissioner. Bituminous Concrete, for

the purpose of enforcing this policy, "bituminous concrete" and "asphalt" are identical terms, and may be used interchangeably.

"Ready-Mix Concrete" is in general a mixture of sand, gravel, portland cement and water, and is delivered to the job site for immediate unloading and installation.

"Jersey barrier" is a device constructed of concrete and mortar, used to restrict traffic and access to highways, roads and other public ways and is often delivered, unloaded and installed by the driver involved.

5. POLICY: Any teamster who is engaged in the hauling of materials to a public works project located in the Commonwealth of Massachusetts must be paid the wage rate determined by the commissioner pursuant to M.G.L. c. 149, § 26, at all times when the teamster is engaged in activity that has a significant nexus or connection to the construction project.

A. SIGNIFICANT NEXUS OR CONNECTION

There is a significant nexus to the project beginning when the truck driver reports for the first duty of the day and commences work related to the project, whether the driver goes to the site first, or whether the driver picks up the first load of materials before the first appearance at the job site.

There is a significant nexus to the project when the truck driver is responsible for and all inclusive of the delivery, unloading, and installation of the materials carried at the project site.

If a truck breaks down while engaged on the project, the wage rate must be paid for the time the driver is required to spend waiting for repairs and the repair itself, but not if the truck is reporting to the site for the first time or making its final return from the site.

The significant nexus to the project ends when the driver leaves the site for the last time on any given day, whether the driver returns home or to some other work-related location including non-public works projects.

B. WORK IN VARYING CLASSIFICATIONS

The wage rate for a teamster must be paid for all time the driver is driving the truck as defined above. If the driver leaves the truck to manually rake or otherwise spread the asphalt, or to engage in other labor that is not related to driving the truck, the worker is engaged in a different job classification for which the Commissioner has set a wage rate. In the event the teamster is

engaged in a different classification for more than one hour during one given day, the employee must be paid the wage rate appropriate for that classification. All required recordkeeping is the requirement of the employer.

C. TRUE AND ACCURATE PAYROLL RECORDS

Pursuant to M.G.L. c.149,§ 27B, the employer is required to keep true and accurate records for all employees employed on the project, showing the name, address and occupational classification, the hours worked by, and the wages paid to each employee.

If the employer fails to differentiate the time spent driving from the time spent in other duties, the higher wage rate must be paid for all time worked.

It is the employer's responsibility to keep a true and accurate record of lunch and breaks and unrelated travel time.

D. APPLICABLE WAGE RATE

The wage rate that must be paid is listed on the minimum wage rate schedule furnished by the Commissioner and may vary from project to project, as the Commissioner determines. Applicable descriptions for teamsters include, but are not limited to: Oper 3 axle equipment, Oper 4 & 5 axle equipment, and Truck Driver. The wage rate paid is determined by applying the appropriate description to the actual piece of equipment that is being driven.

E. TIME NOT CONSIDERED SIGNIFICANTLY CONNECTED TO THE PROJECT

Travelling to the project site for the first time each day, and travelling home after the work day is not considered time on the project for the purpose of this law. Any employee may be paid his or her regular rate of pay for travel time but not less than the law will allow.

Lunch time and break time is not considered time on the project.

F. EFFECTIVE DATE

This policy shall apply to all public works projects for which the awarding authority has advertised for bids beginning on or after Thursday, July 1, 1993.

G. ON-GOING INVESTIGATIONS

This policy does not apply to on-going investigations or projects out to bid or awarded before the effective date.

Note: Policy questions regarding trade jurisdictions not covered by this statement should be directed to the Commissioner of Labor and Industries, 100 Cambridge Street, 11th Floor, Boston, Massachusetts 02202.

IV. WEEKLY PAYROLL REPORTS AND STATEMENT OF COMPLIANCE

In accordance with Massachusetts General Law, c. 149, § 27B, a true and accurate record must be kept of all persons employed on the public works construction project for which the enclosed rates have been provided. A Payroll Form is provided in Appendix "A" (included with State Minimum Wage Rates) and includes all information required to be kept by law. Every contractor or subcontractor is required to keep these records and preserve them for a period of three (3) years from the date of completion of the contract.

Awarding authorities may also request the information contained in the Payroll Forms from each contractor or subcontractor for their records. Once collected, the Awarding Authority is then required to preserve the records for three (3) years, as well.

These payroll records shall be open to inspection by any authorized representative of the department at any reasonable time, and as often as may be necessary. If awarding authorities, contractors or subcontractors wish to substitute the Payroll Form provided with one of their own, it must first be approved in writing by the Commissioner of Labor and Industries.

In addition, each such contractor, subcontractor or public body shall furnish to the Commissioner of Labor and Industries, within fifteen (15) days after completion of its portion of the work, a statement of wages, in the following form: (See Statement of Compliance included in Appendix A)

SUB-ARTICLE 10. RECORD KEEPING (MGL C30, S 39R)

(Definitions: Contract Provisions, Management and Financial Statements, and Enforcement)

I. Section 39R.

A. The works defined herein shall have the meaning stated below whenever they appear in this section:

1. **Contractor** means any person, corporation, partnership, joint venture, sole proprietorship, or other entity awarded a contract pursuant to Section 39M of Chapter 30; Sections 44A-H, inclusive, of Chapter 149; and Sections 30B-P, inclusive of Chapter 7.

2. **Contract** means any contract awarded or executed pursuant to Sections 30B-P, inclusive of Chapter 7 and any contract awarded or executed pursuant to Section 39M of Chapter 30 or Sections 44A-H, inclusive of Chapter 149, which is for an amount or estimated amount greater than $100,000.00.

3. **Records** means books of original entry, accounts, checks, bond statements and all other banking documents, tapes, discs, papers and other documents or transcribed information of any kind, whether expressed in ordinary or machine language.

4. **Independent Certified Public Accountant** means a person duly registered in good standing and entitled to practice as a certified public accountant under the laws of the place of his/her residence or principal office and who is in fact, independent. In determining whether an accountant is independent with respect to a particular person, appropriate consideration should be given to all relationships between the accountant and that person or any affiliate thereof. Determination of an accountant's independence shall not be confined to the relationships existing in connection with the filing of reports with the awarding authority.

5. **Audit** when used in regard to financial statements, means an examination of records by an independent certified public accountant in accordance with generally accepted accounting principles and auditing standards for the purpose of expressing a certified opinion thereon, or in the alternative, a qualified opinion thereon, or, in the alternative, a qualified opinion or a declination to express an opinion for stated reasons.

6. **Accountant's Report** when used in regard to financial statements means a document in which an independent certified public accountant indicates the scope of the audit which he/she has made and sets forth his/her opinion regarding the financial statements taken as a whole with a listing of noted exceptions and qualifications, or an assertion to the affect that an overall opinion cannot be expressed.

   When an overall opinion cannot be expressed, the reason therefor shall be stated. An accountant's report shall include as a part thereof a signed statement by a responsible corporate officer attesting that management has fully disclosed all material facts to the independent certified public accountant, and that the audited financial statement is a true and complete statement of the financial condition of the contractor.

7. **Management** when used herein, means the chief executive officer, partners, principals, or other person or persons primarily responsible for the financial and operational policies and practices of the contractor.

8. Accounting terms, unless otherwise defined herein, shall have a meaning in accordance with generally accepted accounting principles and auditing standards.

B. Subsection A (2) notwithstanding, every agreement or contract awarded or executed pursuant to sections 30B-P, inclusive of Chapter 7, and pursuant to Section 39M of Chapter 30 or to Section 44A-H, inclusive, of chapter 149, shall provide that:

   1. The contractor shall make, and keep for at least six years after final payment, books, records and accounts which in reasonable detail accurately and fairly reflect the transactions and dispositions of the contractor, and

   2. until the expiration of six years after final payment, the office of inspector general and the deputy commissioner of capital planning and operations shall have the right to examine any books, documents, papers or records of the contractor or of his/her subcontractors that directly pertain to, and involve transactions relating to, the contractor or his/her subcontractors and

   3. If the agreement is a contract as defined herein, the contractor shall describe any change in the method of maintaining records or

recording transactions which materially affect any statements filed with the awarding authority, including in his/her description the date of the change and reasons therefor, and shall accompany said description with a letter from the contractor's independent certified public accountant approving or otherwise commenting on the changes, and

4. if the agreement is a contract as defined herein, the contractor has filed a statement of management on internal accounting controls, as set forth in paragraph 9c below, prior to the execution of the contract, and

5. if the agreement is a contract as defined herein, the contractor has filed prior to the execution of the contracts and will continue to file annually, an audited financial statement for the most recent completed fiscal year as set forth in paragraph D below.

C. Every contractor awarded a contract shall file with the awarding authority a statement of management as to whether the system of internal accounting controls of the contractor and its subsidiaries reasonably assures that:

1. Transactions are executed in accordance with management's general and specific authorization;

2. transactions are recorded as necessary:

   a. to permit preparation of financial statements in conformity with generally accepted accounting principles, and

   b. to maintain accountability for assets;

3. access to assets is permitted only in accordance with management's general or specific authorization; and

4. the recorded accountability for assets is compared with the existing assets at reasonable intervals and appropriate action was taken with respect to any difference.

Every contractor awarded a contract shall also file with the awarding authority a statement prepared and signed by an independent certified public accountant, stating that she/he has examined the statement of management on internal accounting controls, and expressing an opinion as to:

1. whether the representatives of management in response to this paragraph and paragraph B above are consistent with the result of management's evaluation of the system of internal accounting controls; and

2. whether such representations of management are, in addition, reasonable with respect to transactions and assets in amounts which would be material when measured in relation to the applicant's financial statements.

D. Every contractor awarded a contract by the Commonwealth or by any political subdivision thereof shall annually file with the deputy commissioner of capital planning and operations during the term of the contract a financial statement prepared by an independent certified public accountant on the basis of an audit by such accountant. The final statement filed shall include the date of final payment. All statements shall be accompanied by an accountant's report. Such statements shall be made available to the awarding authority upon request.

E. The office of inspector general, the deputy commissioner for capital planning and operations and any other awarding authority shall enforce the provisions of this section. The deputy commissioner of capital planning and operations may after providing an opportunity for the inspector general and other interested parties to comment, promulgate pursuant to the provisions of Chapter 30A such rules, regulations and guidelines as are necessary to effectuate the purposes of this section. Such rules, regulations and guidelines may be applicable to all awarding authorities.

A contractor's failure to satisfy any of the requirements of this section may be grounds for debarment pursuant to Section 44C of Chapter 149.

F. Records and statements required to be made, kept or filed under the provisions of this section shall not be public records as defined in Section 7 of Chapter 4 and shall not be open to public inspection; provided, however, that such records and statements shall be made available pursuant to the provision of clause (2) of paragraph B.

ARTICLE 8

THE COMMONWEALTH OF MASSACHUSETTS

SUPPLEMENTAL EQUAL EMPLOYMENT OPPORTUNITY ANTI-DISCRIMINATION AND AFFIRMATIVE ACTION PROGRAM

I. For purposes of this contract, "minority" refers to Asian-Americans, Blacks, Spanish Surnamed Americans, North American Indians, and Cape Verdeans. "Commission" refers to the Massachusetts Commission Against Discrimination.

II. During the performance of this contract, the contractor and all of his subcontractors (hereinafter collectively referred to as the Contractor), for himself, his assignees and successors in interest, agree as follows:

1. In connection with the performance of work under this contract, the Contractor shall not discriminate against any employee or applicant for employment because of race, color, religious creed, national origin, age or sex. The aforesaid provision shall include, but not be limited to the following: employment upgrading, demotion or transfer, recruitment advertising, recruitment layoff, termination, rates of pay or other forms of compensation, conditions or privileges of employment, and selection for apprenticeship. The Contractor shall post hereafter in conspicuous places, available for employees and applicants for employment, notices to be provided by the Commission setting forth the provisions of the Fair Employment Practices Law of the Commonwealth (M.G.L. Chapter 151B).

2. In connection with the performance of work under this Contract, the Contractor shall undertake in good faith affirmative action measures designed to eliminate any discriminatory barriers in the terms and conditions of employment on the grounds of race, color, religious creed, national origin, age or sex, and to eliminate and remedy any effects of such discrimination in the past. Such affirmative action shall entail positive and aggressive measures to ensure equal opportunity in the areas of hiring, upgrading, demotion or transfer, recruitment, layoff or termination, rate of compensation, and in-service or apprenticeship training programs. This affirmative action shall include all action required to guarantee equal employment opportunity for all persons, regardless of race, color, religious creed, national origin, age or sex. A purpose of this provision is to ensure to the fullest extent possible an adequate supply of skilled tradesmen for this and future Commonwealth public construction projects.

1. As part of his obligation of remedial action under the foregoing section, the Contractor shall maintain on this project a not less than 10% ratio of minority employee man hours to total man hours in each job category including but not limited to bricklayers, carpenters, cement masons, electricians, ironworkers, operating engineers, and those "classes of work" enumerated in Section 44C of Chapter 149 of the Massachusetts General Laws.

2. In the hiring of minority journeymen, apprentices, trainees and advanced trainees, the Contractor shall rely on referrals from a multi-employer affirmative action program approved by the Commission, traditional referral methods utilized by the construction industry, and referrals from agencies, not more than three in number at any one time, designated by the Liaison Committee or the Commission.

IV. 1. At the discretion of the Commission there may be established for the life of this contract a body to be known ad the Liaison Committee. The Liaison Committee shall be composed of one representative each from the agency or agencies administrating this project, hereinafter called the administering agency, the Commission and such other representatives as may be designated by the Commission in conjunction with the administering agency.

2. The Contractor (or his agent, if any, designated by him as the on-site equal employment opportunity officer) shall recognize the Liaison Committee as an affirmative action body, and shall establish a continuing working relationship with the Liaison Committee, consulting with the Liaison Committee on all matters related to minority recruitment, referral, employment and training.

3. The Contractor shall prepare projected manning tables on a quarterly basis. These shall be broken down into projections, be week, or workers required in each trade. Copies shall be furnished on e week in advance of the commencement of the period covered, and also when updated to the Commission and Liaison Committee.

4. Records of employment referral orders, prepared by the Contractor, shall be made available to the Commission and to the Liaison Committee on request.

5. The Contractor shall prepare weekly reports in a form approved by the Commission of hours worked in each trade by each employee, identified as minority or non-minority. Copies of these shall be provided at the end of each such week to the Commission and to the Liaison Committee.

V. If the Contractor shall use any subcontractor on any work performed under this contract, he shall take affirmative action to negotiate with qualified minority subcontractors. This affirmative action shall cover both pre-bid and post-bid periods. It shall include modification to the Office of Minority Business Assistance (within the Executive Office of Communities and Development) or its designee, while bids are in preparation, of all products, work or services for which the Contractor intends to negotiate bids.

VI. In the employment of journeymen, apprentices, trainees and advanced trainees, the Contractor shall give preference, first, to citizens of the Commonwealth who have served in the armed forces of the United States in time of war and have been honorably discharged therefrom or released from active duty therein, and who are qualified to perform the work to which the employment related, and, secondly, to citizens of the Commonwealth generally, and, if such cannot be obtained in sufficient numbers, then to citizens of the United States.

VII. A designee of the commonwealth and a designee of the Liaison Committee shall each have right of access to the construction site.

VIII Compliance with Requirements

The Contractor shall comply with the provision of Executive Order No. 74 as amended by Executive Order No.116 dated May 1, 1975, and of Chapter 151B, as amended, of the Massachusetts General Laws, both of which are herein incorporated by referenced and made a part of this contract.

IX Non-Discrimination

The Contractor, in the performance of all work after award, and prior to completion of the contract work, will not discriminate on grounds of race, color, religious creed, national origin, age or sex in employment practices in the selection or retention of subcontractors, or in the procurement of materials and rentals of equipment.

X. Solicitations for Sub-Contracts,
and for the Procurement of Materials and Equipment

In all solicitations either by competitive bidding or negotiation made by the Contractor either for work to be performed under a subcontract or for the procurement of materials or equipment, each potential subcontractor or supplier shall be notified in writing by the Contractor of the Contractor's obligations under this Contract relative to non-discrimination and affirmative action.

XI Bidders Certification Requirement

1. The bidders certification form currently in use will be deleted from all future bid documents.

2. The following certification statement will be inserted in the bid document just above the bidder's signature, as a substitute for the present bidder certification form.

"The bidder hereby certifies he shall comply with the minority manpower ratio and specific action steps contained in the appendix EEO attached hereto, including compliance with the minority contractor compliance specified in Section V of said appendix. The contractor receiving the award of the contract shall be required to obtain from each of its subcontractors and submit to the contacting or administering agency prior to the performance of any work under said contract a certification by said subcontractor, regardless of tier that it will comply with the minority manpower ratio and specific affirmative action steps contained in the appendix EEO.

XII Contractor's Certification

The Contractors certification form must be signed by all successful low-bidder(s) prior to award by the contracting agency.

XIII Compliance-Information, Reports and Sanctions

1. The Contractor will provide all information and reports required by the administering agency or the Commission on instructions issued by either of them and will permit access to its facilities and any books, records, accounts and other sources of information which may be determined by the Commission to affect the employment of personnel. This provision shall apply only to information pertinent to the Commonwealth's supplementary affirmative action contract requirements. Where information required is in the exclusive possession of another who fails or refuses to furnish this information, the Contractor shall so certify to the administering agency or the Commission as appropriate and shall set forth what efforts he has made to obtain the information.

2. Whenever the administering agency, the Commission, or the Liaison Committe believers the General Contractor or any Subcontractor may not be operating in compliance with te termis of this Section, the Commission directly, or through its designated agent, shall conduct an appropriate

investigation, and may confer with the parties, to determine if such Contractor is operating in compliance with the terms of this Section. If the Commission or its agent finds the General Contractor or any subcontractor not in compliance, it shall make a preliminary report on non-compliance, and notify such Contractor in writing of such steps as will in the judgement of the Commission or its agent bring such Contractor into compliance. In the event that such Contractor fails or refuses to fully perform such steps, the Commission or its agent shall make a final report of non-compliance, adn recommend to the administering agency the imposition of one or more of the sanctions listed below. If, however, teh Commission believes the General Contractor or any Subcontractor has taken or is taking every possible measure to achieve compliance, it shall not make a final report of non-compliance. Within fourteen days of the receipt of the recommendations of the Commission, the administering agency shall move to impose on or more of the following sanctions, as it may deem appropriate to attain full and effective enforcement:

a. The recovery by the administering agency from the General Contractor of 1/100 of 1% of the contract award price or $1,000, whichever sum is greater, in the nature of liquidated damages or, if a subcontractor is in non-compliance, the recovery by the administering agency from the General Contractor, to be assessed by the General Contractor as a back charge against the Subcontractor, of 1/10 of 1% of the subcontract price, or $400., whichever is greater, in the nature of liquidated damages, for each week that such party fails or refuses to comply;

b. The suspension of any payment or part thereof due under the contract until such time as the General Contractor or any Subcontractor is able to demonstrate his compliance with the terms of the contract;

c. The termination, or cancelation of the contract, in whole or in part, unless the General Contractor or any Subcontractor is able to demonstrate within a specified time his compliance with the terms of the contract;

d. The denial to the General Contractor or any Subcontractor of the right to participate in any future contracts awarded by the administering agency for a period of up to three years.

3. If at any time after the imposition of one or more of the above sanctions a Contractor is able to demonstrate that he is in compliance with this Section,

he may request the administering agency, in consultation with the Commission, to suspend the sanctions conditionally, pending a final determination by the Commission as to whether the Contractor is in compliance. Upon final determination of the Commission, the administering agency, based on the recommendation of the Commission, shall either lift the sanctions or reimpose them.

4. Sanctions enumerated under Sections XII-2 shall not be imposed by the administering agency except after an adjudicatory proceeding, as that term is used M.G.L. c.30A, has been conducted. No investigation by the Commission or its agent shall be initiated without prior notice to the Contractor.

XIV. Severability

The provisions of this section are severable, and if any of these provisions shall be held unconstitutional by any court of competent jurisdiction, the decision of such court shall not affect or impair any of the remaining provisions.

301. CMR 50.00: AFFIRMATIVE ACTION

Section

50.01: Declaration of Policy
50.02: Purpose and Scope
50.03: Definitions
50.04: Employment Policies of Agencies Within EOEA
50.05: State Services and Facilities
50.06: Eligibility for Financial Assistance
(301 CMR 50.07 and 50.08: RESERVED)
50.09: Construction Projects Conducted by Agencies
50.10: Construction Projects Conducted by Grantees
(301 CMR 50.11 through 50.13: RESERVED)
50.14: Compliance and Sanctions
50.15: Severability
50.16: Appendix 1. Executive Order 74 (as amended and revised by Executive Order 116) the Governor's Code of Fair Practices.
50.17: Appendix 2. Supplemental Equal Employment Opportunity Anti-Discrimination and Affirmative Action Program
50.18: Appendix 3. Equal Employment Opportunity Guidelines
50.19: Appendix 4. Fair Housing Guidelines
50.20: Appendix 5. Memorandum of Agreement
50.21: Appendix 6. Goals and Timetables Adopted Pursuant to the

Department of Labor's Regulations 41 CFR 60-4.6

50.22: Appendix 7. Rules of Procedure for Hearings on Compliance with the Commonwealth's Equal Employment Policy and Anti-Discrimination and Affirmative Action Plan

50.01: Declaration of Policy

(1) Non-discrimination and equal opportunity are the policy of the Executive Office of Environmental Affairs in all of its decisions, programs and activities. To that end, all agency employees shall rigorously take affirmative steps to ensure equality of opportunity int he internal affairs of all agencies as well as in their relations with the public, including those persons and organizations doing business with any agency of the Executive Office of Environmental Affairs. Each agency, in discharging its decisions, programs and activities shall have in meeting the goal of equality of opportunity.

(2) Affirmative action requires more than vigilance in the elimination of discriminatory barriers on the grounds of race, color, creed, national origin, age, and sex. It must also entail positive and aggressive measures to ensure equal opportunity in internal personnel practices and in those programs which can affect persons and political subdivisions outside of state government. This affirmative action shall include efforts necessary to remedy the effects of present and past discriminatory patterns and practices and any action necessary to guarantee equal opportunity for all people.

(3) All agencies shall initiate affirmative action programs designed to conform to this policy. All such affirmative action programs shall be subject to review by the Executive Office of Administration and Finance, or such other Office or person as may be designated by the Governor, and the Massachusetts Commission Against Discrimination, as provided in 301 CMR 50.16 (Appendix 1, Executive Order 74, as amended by Executive Order No. 116, the Governor's Code of Fair Practice).

(4) All powers, functions and duties granted to the Secretary of Environmental Affairs under any provision of law shall be construed liberally for the accomplishment of these regulations.

These regulations establish the procedures by which the Executive Office of Environmental Affairs and all its agencies shall comply with the policy and requirements for equal employment opportunity and affirmative action.

50.10 Construction Projects Conducted by Grantees

(1) Before any applicant receives any financial assistance, including state assisted or federally assisted construction grants awarded under any program administered by an agency, the Secretary must have determined that such applicant is in compliance with the

Equal Employment Opportunity Guidelines and Fair Housing Guidelines of the Commission, as they may be amended from time to time (301 CMR 50.18 Appendix 3 and 50.19 Appendix 4 of these regulations) according to the procedures set forth in 301 CMR 50.06 of these regulations.

(2) Every state or state-assisted or federal or federally-assisted contract for public buildings and public works or for goods or services that is let by a grantee shall contain an article prohibiting discriminatory employment practices by contractors, subcontractor, and suppliers of goods or services based on race, color, religion, national origin, ancestry, age or sex. The non-discrimination article shall include a provision requiring contractors and suppliers of goods or services to give written notice of their commitments under this section to any labor union, association or brotherhood with which they have a collective bargaining or other agreement. Such notice shall also be given to the Commission and to SOMBA.

(3) Grantees shall adopt for use in all contracts for construction projects with a dollar value in excess of ten thousand dollars ($10,000.) an adapted version of the Commonwealth of Massachusetts Supplemental Equal Employment Opportunity Anti-Discrimination and Affirmative Action Program (Supplemental Program) (301 CMR 50.17 Appendix 2 of these regulations). Such contract may include minority workforce percentages greater than those required for the geographical locations of the construction project as set forth in the Supplemental Program.

(4) Grantees shall take affirmative steps to increase participation of minority business enterprise (MBEs) in any construction grant.

(5) Prior to the publication of the availability of contracts for construction work to be performed under any construction grant with a total dollar value in excess of ten thousand dollars ($10,000.), the grantee shall notify SOMBA of its intent to solicit bids and shall make available to SOMBA, upon request, copies of the proposal to bid, specifications and plans, and bid invitations.

(6) At the discretion of the Commission there may be established for the life of any construction contract a body to be known as the Liaison Committee, which may be the Executive Office Liaison Committee as established by 301 CMR 50.09 (3) of these regulations. A representative of the grantee shall be a member of the Liaison Committee. The contractor or his agent shall recognize the Liaison Committee as an affirmative action body, and shall establish a continuing working relationship with the Liaison Committee, consulting with the Liaison Committee on all matters related to minority recruitment, referral, employment and training.

(7) Before making the final allocation of funds to any grantee, the Secretary shall review any contracts for construction work to be performed under the grantee, to ascertain the grantee's compliance with the provisions of these regulations.

MINIMUM PERCENTAGES TO BE APPLIED TO STATE AND STATE-ASSISTED CONTRACTS WITHIN THE COMMONWEALTH OF MASSACHUSETTS

The following percentages shall apply		Not Less Than:
Boston:	Impact Area (Jamaica Plain (part), Mattapan, South Cove, Chinatown, Bay Village, Roxbury, Dorchester, South End.	30%
	Others	10%
Cambridge:		12%
New Bedford:		18%
Springfield:		10%
All other cities and towns		5%

ORDER NO. 250 OF 1988

ORDERED:

May 16, 1988

Be it ordered that Chapter 24 of the Zoning Ordinance of the City of Quincy as amended, be further amended in Art. VIII, by adding a new section 87: Blasting.

Section 87

1. Pre-blast Survey

a. For all permits issued for blasting (rock excavation) in the City of Quincy, a pre-blast survey must be made by the contractor or by an approved firm in this kind of work and satisfactory to the contractor's insurance company.

b. The pre-blast survey will include a survey of the interior and exterior of existing buildings and stone walls adjacent to the project as specified herein, before any excavation or blasting is done. Written approval must be secured from the Fire Chief, City Engineer and Building Inspector serving as the Committee on Blasting.

c. The survey shall record all visible structural defects such as cracks, settlement and lines out of plumb.

d. The survey data shall be recorded in a permanent manner in approved hardbound notebooks. The survey data shall include polaroid photographs showing the building constructions surveyed referenced to the notebook pages. Also a tape recording of all data pertinent to the survey shall be made. The scope and format of the record survey data shall be satisfactory to the Committee on Blasting. Before commencing any blasting or ledge excavation, copies of the survey must be on file at the offices of the Quincy City Engineer, and Quincy City Clerk, City Hall, Quincy, MA.

e. The adjacent area requiring the pre-blasting survey is specified as all buildings and stone walls within a radius of three hundred fifty feet (350) from said blast.

f. Provided, however, that no pre-blasting survey shall be required if blasting is within the following limits: The total charge weight per blast does not exceed five (5) pounds and the maximum weight per delay does not exceed two pounds per delay.

YEAS Cahill, Cheney, Chretien, DeCristofaro, McGrath, Nutley, Phelan, Sheets, Toland

NAYS Cahill, Cheney, Chretien, DeCristofaro, McGrath, Nutley, Phelan, Sheets, Toland

ORDERED:

g. If blasting is designed to excavate more than a ten (10) cubic yard area, the contractor must post a bond with the City of Quincy. The amount of said bond shall be determined by the Committee on Blasting. The Committee on Blasting will not release the bond until it is convinced that all judgments and claims have been reasonably dealt with by the contractor.

h. All blasting is to be supervised on site by an authorized member of the Fire Department, assigned by the Chief, and the cost of said supervision shall be the sole responsibility of the contractor.

i. Any person who shall violate any of the provisions of this ordinance, as determined by the Committee on Blasting, or who fails to comply therewith, shall severally, for each and every violation and noncompliance respectively, be liable to a penalty of two hundred dollars ($200.00) for each offense.

PASSED TO BE ORDAINED OCTOBER 16, 1989

ATTEST

CLERK OF COUNCIL

APPROVED

OCT 23 1989

MAYOR

YEAS Cahill, Cheney, Chretien, DeCristofaro, McGrath, Nutley, Phelan, Sheets, Toland

NAYS Cahill, Cheney, Chretien, DeCristofaro, McGrath, Nutley, Phelan, Sheets, Toland

DIVISION ONE

INDEX

Section No.	Title	No. of Pages
01010	Summary of Work	4
01045	Safety Controls and Signs for Construction Operations	3
01050	Control of Work	6
01055	Temporary Construction Facilities	2
01150	Measurement and Payment	5
01170	Special Provisions	7
01300	Submittal Requirements	5
01605	Use and Control of Materials	3
01625	Environmental Protection Dust Control	5

SUMMARY OF WORK

1.01 LOCATION OF WORK

A All work under this contract is located in the City of Quincy, Massachusetts. The purpose of the work is to improve the roadway pavements, street intersections, sidewalks, minor drainage and traffic improvements for the safety of vehicular and pedestrian traffic.

1.02 SCHEDULE AND OTHER SITE SPECIFIC REQUIREMENTS

A The project construction milestone dates, maintenance of safe streets and sidewalks for vehicular/pedestrian traffic through the project area, safe and unobstructed access to businesses and abutters, public safety measures and site clean-up on a daily basis shall be strictly enforced. No waiver of any one of these requirements shall be allowed. The contractors are urged to study these requirements before submitting bids. Unfamiliarity with the above requirements shall not be accepted as an excuse for lack of performance an/or basis for claims.

B No site work shall be allowed between Thanksgiving Day and March 31 without written permission from the City. During all periods of no construction activity and prior to the project completion, the Contractor shall be fully responsible for maintaining roads/sidewalks, utilities and other public amenities for convenience, safety and safe access to businesses and abutters at all times.

C The Contractor shall start construction in Sea Street **first** prior to starting any other work. Work shall be continuous for said street without delays until all work is complete regardless of commencing work on other streets.

1.03 WORK TO BE DONE

A The work shall be done in accordance with the Massachusetts Highway Department Standard Specifications for Highways and Bridges, Construction Standards, other approved standards of the Department, the Manual on Uniform Traffic Control Devices, Standard Drawings for Signs and Supports, all as last amended, other standards as referenced in these specifications.

B The work under this contract relates to but is not necessarily limited to the streets listed below. The streets, as listed below, shall be financed through the funds provided by the City of Quincy and the Commonwealth of Massachusetts.

C LIST OF STREETS - LIMITS OF CONSTRUCTION

The attached pages list the streets to be included in this contract.

D The work shall consist of furnishing all materials, labor, equipment, tools, apparatus and all other incidental work required to complete the construction of the new roadway pavement; adjustments and/or replacement of existing utility appurtenances (sewer, water, and drain lines, etc.); construction of sidewalks, wheelchair ramps, minor drainage and traffic improvements, regrading portions of the side street intersections and driveways to match the new finished pavement elevations, loaming, seeding and removal and replacement of street signs, as specified. The work shall include, but not necessarily be limited to the following:

1. Cutting and removing of tree stumps and tree root systems, where directed.

2. Excavation of existing bituminous concrete pavement where specifically directed by the Engineer, to the lines and grades shown or as directed.

3. Adjustments, repairs, and/or replacement of utility appurtenances, (manholes, catch basins, curb inlets, and water valves, frames, grates, covers, gate boxes, etc.) and other related work, as specified or as directed.

4. Installation of bituminous concrete pavement and/or full depth roadway pavement construction at locations where required.

5. Construction of bituminous/cement concrete sidewalks, driveways, store front entrances, and installation of new granite curbs, as shown or as directed.

6. Removal and replacement of street signs and other miscellaneous traffic improvements, as specified or as directed.

7. Installation of wheelchair ramps, removal and resetting of curbstones, as directed or as specified.

8. Loaming, seeding and minor landscaping and drainage improvements (new drain lines and appurtenances) as specified or as directed.

9. Furnishing, installation and maintenance of all traffic control and safety measures during the construction period, including all types of signage and traffic/public safety devices (both lighted and unlighted), drums, flashers, barricades, detours, required for maintenance of vehicular/pedestrian access to abutting businesses and properties. Maintaining continuity of utility services to all public amenities, businesses and residential areas at all times.

10. Furnishing, installation and maintenance of all temporary parking restriction signs.

1.04 ABBREVIATIONS AND REFERENCES

A The following abbreviations and references may be used in these specifications.

1.	Standard Specifications:	Commonwealth of Massachusetts, Department of Public Works, Standard Specifications for Highways and Bridges.
2.	Construction Standards:	Commonwealth of Massachusetts Department of Public Works Construction Standards.
3.	Signs & Supports:	Commonwealth of Massachusetts Department of Public Works Standard Drawings for Signs and Supports.
4.	MUTCD:	Commonwealth of Massachusetts Manual on Uniform Traffic Control Devices.
5.	AASHTO:	The American Association of State Highway Transportation Officials.
6.	ACI:	American Concrete Institute.
7.	ANSI:	American National Standard Institute.
8.	ASCE:	American Society of Civil Engineers.
9.	ASTM:	American Society of Testing Methods.
10.	AWS:	American Welding Society.
11.	Fed. Specs.:	Federal Specifications.

B Where reference is made to a specifications by one of the above-referenced or other associations, it is understood that the latest revisions thereof shall apply.

C In case of conflict, these Specifications shall take precedence over the Standards and Specifications noted above.

Street Name	Ward	Street Limits		Description of Work
		From	To	Road Resurfacing
Adams Street	3&4	Common Street	Milton Town Line	2" Bit. Excavation by Cold Plane Install Leveling Course as directed Install 2" of Bituminous Top Beale and Adams Traffic improvements as per plan Install New Cement Conc. Sidewalks and Driveway Apron's Install New Concrete WCR's w/ Detectable Warning Panels Reset Existing Granite Curb and Install new curbing Install Fexible Porous Pavement around trees as directed Drop and Adjust All Utilities as Required Install trees as directed Loam and Seed as Required Install Reflectorized Thermoplastic as Required

SAFETY CONTROLS & SIGNS
FOR CONSTRUCTION OPERATIONS

DESCRIPTION

The work under this Item shall conform to the relevant provisions of Section 850 of the Standard Specifications, the Manual on Uniform Traffic Control Devices (Part IV, as amended), requirements of this section, and work as shown or as directed.

The work shall include furnishing, installing and maintaining various traffic control devices for the protection of area residents, the traveling public and workers during construction operations.

All signs, barricades, cones and drums shall have Encapsulated Lens Reflective Sheeting in accordance with Section M9.30.2 of the Standard Specifications.

FLAGS FOR ADVANCE WARNING SIGNS

Standard orange and red-orange flags (16-inch minimum) shall be mounted on all signs in advance of starting the work.

Flags shall be mounted as shown on page 6B-13 of the Mass. Manual on Uniform Traffic Control Devices (MUTCD) and shall not interfere with a clear view of the sign face.

Reflectorized plastic drums and the reflectorized plastic drums with flashers (Type A) shall be placed as directed by the Engineer.

Plastic drums shall not be less than 19-inches in any diameter transverse to the direction of traffic flow, nor less than 14-inches in any diameter.

Flexible reflective sheeting shall be applied to all plastic drums in accordance with the Drawings in the Standard Specifications.

PROVISIONS FOR TRAVEL AND PROSECUTION OF THE WORK

The Contractor shall submit a Schedule of Operations as provided for in the Standard Specifications, for the Engineer's approval before any work is started. The schedule of operations shall include a plan of construction procedures and the safety measures to be used during the execution of the work.

A work schedule incorporating all traffic control appurtenances and defining utilization of access points shall be submitted to the Engineer for approval. All temporary work shall be in conformance with Section 850 of the Standard Specifications, as last amended and supplemented by the following:

1. The Contractor shall provide such temporary bridging, steel plates, temporary pavement, wood-framed walkways, caution safety and other necessary signs directing the pedestrian/vehicular traffic towards unblocked and safe areas.
   In areas where the construction activity is in progress, the Contractor is required to install directional signs in front of businesses saying "OPEN FOR BUSINESS" or something similar for guidance of the shoppers. The Contractor shall provide safe access/egress, as defined above, to all businesses and abutters within the project area.

2. The Contractor shall schedule its operations so as to cause the least interruption at all times in the flow of traffic on existing roads during construction and shall provide for the safe and convenient passage of pedestrians and vehicles throughout the project area and the adjacent areas impacted by the construction operations.

3. During construction hours, traffic flow must be controlled by Uniformed Traffic Police Officers, in accordance with Section 7.0 of the Standard Specifications. Between the hours of 9:00 AM and 3:30 PM, a minimum of one moving lane shall be maintained on the roadways in each direction. During peak traffic hours, the Contractor may be required to open more than one moving lane in one or both directions, as directed by the Engineer.

4. For construction after normal work hours, on weekends, and holidays, at least one traffic lane with pull out areas must be made available to pedestrian and vehicular traffic. Gravel borrow and bituminous concrete needed to maintain temporary passable travel lane ramps to allow access and egress to abutting properties shall be provided as needed, by the Contractor.

5. Certain construction operations such as utility work and roadway/sidewalk reconstruction may restrict access/egress on some roads and to businesses and abutters. Under these circumstances, the Contractor is required to schedule his operations during off-peak hours or late evenings and in small stretches so that a particular work activity can be completed in the shortest possible time.

   The Contractor is required to give abutting property owners 48 hours notice of periods when access/egress will not be available. It is again stressed that the City of Quincy considers the access/egress to abutting residences and businesses of critical importance and the Contractor must implement provisions of safe access/egress.

6. Particular care shall be exercised to establish and maintain such methods and procedures that will not create hazards of any nature. Traffic control, safety devices and/or signs having messages that are irrelevant to normal traffic conditions will be removed or properly covered at the end of each work period. Signs are to be kept clean at all times and legends shall be distinctive and unmarred.

7. In areas of high pedestrian and vehicular traffic volume, the Contractor is required to remove all waste materials and construction equipment from the work site and clean and make the site and its approaches safe on a daily basis. The construction equipment shall not be parked overnight on the site or the adjacent roads unless permitted by the Engineer.

8. In the event that the digital controllers are not available from the manufacturer when needed, the Contractor shall provide temporary mechanical controllers at no extra cost.

9. Night watchmen may be required where special hazards exist.

10. Unless permission to close a street is received in writing from the City, all excavated materials shall be placed so that vehicular and pedestrian traffic is maintained at all times. If the Contractor's operations cause traffic hazards, appropriate safety measures satisfactory to the Engineer shall be implemented immediately.

11. Detours around construction will be subject to the approval of the City Traffic Engineer. where detours are permitted, the Contractor shall provide all necessary barricades, flashers, flashing arrows and sighs in conformance with the Local and State regulations and standards to divert the flow of traffic. The Engineer will strictly control the periods when traffic is being detoured.

12. The Contractor will be responsible for posting signage that clearly states that any vehicle impeding the progress of construction will be towed at the Owner's expense. If Contractor fails to post such signs, Contractor will be responsible for **all** towing charges.

13. The Contractor will be fully responsible for all injuries or claims, damage to public and private properties, and any violations of the local, state or federal regulations resulting from his construction operations whether or not police protection has been provided. The services of uniformed traffic police shall in no way relieve the Contractor of its responsibilities under the Contract.

CONTROL OF WORK

PROJECT SCHEDULES

The Contractor shall furnish plant and equipment to secure a satisfactory quality of Work and a rate of progress to insure a timely completion of the work.

The Contractor shall follow the agreed construction schedule, and all work progress shall be monitored against the on a bi-weekly basis, as required.

SITE SUPERINTENDENCE & WORK FORCE

The Contractor shall provide, at its own expense, during the entire course of the work, a competent full-time job superintendent to supervise the Contractor's employees, equipment operations and the general coordination and management of the project. The superintendent shall not work part-time as a tradesman, nor shall he be removed from the job except with the written permission of the Engineer.

The Contractor shall furnish a labor force, which will work in harmony and accord with all other labor forces taking part in, or connected with this project. The Contractor shall to promptly remove from the work o this project any superintendent, assistant or workman who, in the opinion of the Engineer, is incompetent, unskillful, disruptive, or disorderly, and no person so removed from the work shall be re-employed on this project without the Engineer's written consent.

COORDINATION WITH LOCAL AGENCIES

The Contractor shall coordinate its activities with the Police, Traffic, Fire and Public Works Departments in the City, as required.

The Contractor shall maintain all area services and public amenities at all times and shall provide the Public Works Department with an address at which it can be contacted in an emergency. Upon notification by the City or the Engineer, the Contractor shall promptly restore services or make repairs as necessary or as directed.

The Contractor shall immediately notify utility companies of any damage to their utilities resulting from its construction operations.

The Contractor shall notify **DIGSAFE at 1-800-322-4844** at least 72 hours before excavating in any public way.

The Contractor shall give at least 48 hours written notice to the Engineer and the effected businesses, utilities, residents and abutters prior to the commencement of work on roads and utilities effecting traffic safety and safe access for abutters and performance of other normal area activities.

During the progress of the work, the Contractor shall remove debris, sweep and sprinkle water in work areas, maintain the area as necessary to minimize the creation and dispersion of dust. Calcium chloride shall not be used to control the dust problems.

SITE WORK

The Contractor shall, without additional compensation, be required to provide safe and convenient access to all abutters during the prosecution of the Work.

All construction areas shall be adequately safeguarded by providing temporary barricades, caution signs, lights and other means to prevent accidents to persons, and damage to property. The Contractor shall, at its own expense, provide suitable crossing from travel by pedestrians and workmen and take precautions to prevent injury to the public due to its construction operations. All excavated materials, equipment, or stockpiles that could be dangerous to the public shall be protected, barricaded, well lighted at nights, and/or removed off-site as directed by the Engineer.

The Contractor shall be responsible for the protection of all public and private property. Any direct or indirect damage done to public or private property for any reason due to the Contractor's operations shall be restored by the Contractor, at its own expense to a condition equal to or better than existed before the damage.

All open excavations shall be adequately safeguarded by providing temporary barricades, caution signs, lights, flares and other means to prevent injuries to persons and damage to property. The Contractor shall, at its own expense, provide suitable and safe means for completely covering all open trench excavations (backfilling or covering with steel plates of adequate strength) and for accommodating travel when work is not in progress. Bridges provided for access to private property during construction shall be removed when no longer required.

Test pits for the purpose of locating underground pipe lines, structures, or to determine the sub-surface conditions prior to or during construction shall be excavated and backfilled by the Contractor at his own expense regardless of whether the test pits are dug at the direction of the Engineer or for the convenience of the Contractor. Test pits shall be backfilled immediately and the surfaces restored and maintained in a manner satisfactory to the Engineer.

All precautions shall be taken to prevent freezing or damage to any of the exposed or partially uncovered utility lines. All trenches shall be backfilled as soon as possible and immediately followed by an installation of temporary bituminous surface. The roadway shall be free of construction debris and excavated material and shall be relatively smooth to provide safe passage.

Necessary access for fire apparatus and other emergency vehicles must be maintained at all times. Fire hydrants and water holes for fire protection on or adjacent to the project site shall be kept accessible to the fire apparatus at all times, and no obstructions shall be placed within 10 feet of any such facility.

When work at the site necessitates the temporary placement of vehicles, equipment, materials or

workers in public streets, sidewalks or walkways, the Contractor shall provide and use all necessary warning devices, barricades, signs, special apparel, etc., in the performance of the work, as set forth in Section 250 of the Standard Specifications.

No pavement work shall be done between December 15th and March 31st unless specifically permitted by the Engineer. Therefore, the Contractor shall not begin and construction which cannot be satisfactorily completed before December 15th. The Contractor shall not have any claim for extension of time for completion of the Work under this contract as a result of this restriction.

INTERFERENCE WITH EXISTING WORKS

The Contractor shall at all times conduct its operations so as not to interfere with the existing works. The Contractor shall develop a program, with the approval of the Engineer and interested officials, to provide for construction and putting into service of the new works in an orderly manner.

All work connected with cutting into and reconstruction of existing pipes or structures shall be planned to interfere with the operation of the existing facilities for the shortest possible time when the demands on the facilities best permit such interference.

The Contractor shall have no claim for additional compensation by reason of delay or inconvenience in adapting its operations to meet the above requirement.

Pipe lines will be located substantially as indicated on the drawings, but the City reserves the right to make modifications in alignment, sizes, fittings and appurtenances to suit field or the existing system operation/design conditions. This type of modification shall not relieve the Contractor from his contractual obligations in laying, jointing, and installing difference additional items, as required.

Where dimensions and location of existing structures are of importance in the installation or connection of any part of the work, the Contractor shall verify such dimensions and locations in the field at its own expense, before fabricating or ordering any material or equipment.

INTERFERENCE WITH STREETS/SIDEWALKS

The Contractor shall not close or obstruct any portion of a street, road, or private way without obtaining Apermits to perform work within limits of public ways from the Department of Public Works (DPW).

Streets, roads, private ways and walks under construction shall be maintained so as not to endanger the public/private properties and safety of the traveling public and residents at all times. The Contractor shall be fully responsible for all damages arising out of its operations and for the adequacy of safety measures provided at each site.

If the closure of a street of road is necessary, the Contractor shall notify the Police, Fire, Traffic and Public Works Departments and shall cooperate with the Traffic Department in the establishment of

alternate routes. The Contractor shall provide and install the required number of detour signs (plainly marked and well-lighted) and take all other safety measures necessary to minimize confusion.

Along the location of work, all fences, stone walls, curbs, drives and walks, bushes, trees, shrubbery and other physical features which are within the limits of the streets or are associated with private property shall be protected to the satisfaction of the Engineer and to the satisfaction of the property owner(s).

Fences and other features removed by the Contractor for site access are to be restored in the location indicated by the Engineer as soon as conditions permit. All damages to existing physical feature shall be repaired to the satisfaction of the Engineer and the satisfaction of the affected property owner(s). All protection, repair, restoration and/or replacement work required shall be at the Contractor=s expense.

PROTECTION/RELOCATION OF EXISTING STRUCTURES/UTILITIES

The Contractor shall assume full responsibility for the protection of all buildings, structures/utilities, public or private, including poles, signs, services to buildings, utilities in the street, (gas, water, sewer, drains, the electric and telephone, cable and the associated appurtenances) whether or not these are shown on the drawings. Any damage resulting from the construction operations shall be repaired at the Contractor's expense.

The City will provide the Contractor with all existing information to determine the location of existing lines and appurtenances for sewer, water and drainage systems. The Contractor, however, shall bear full responsibility for ascertaining the correct locations of all utility lines and associated structures and appurtenances before starting construction work.

The identification, relocation and/or resetting of hand-holes, manholes, vaults, valves, and other distribution control devices for the electric, gas, and telephone cable systems, shall be the responsibility of the respective utility companies. However, the Contractor shall obtain a comprehensive list of all such appurtenances from the utility companies, verify their physical location and shall be fully responsible for their protection during the construction operations.

All costs charges or damages resulting from lack of comprehensive pre-construction investigations related to the above items shall be borne by the Contractor.

Protection and temporary removal and replacement of existing utilities and structures as described in this section shall be considered as a part of the work under the Contract and all costs in connection therewith shall be borne by the Contractor.

In all public streets or private ways, except for City-owned utilities (water mains, sewers and drains), all relocation of utilities required for construction of the contract work shall be performed by the appropriate utility organization unless agreed otherwise by the utility company. The Contractor shall bear all expenses incurred because of utilities damaged due to its operations.

The operation of existing utilities shall not be interrupted except with written permission of the City and the operator of such utilities. The Contractor shall allow ample time and resources to implement all measures required for the continuation of existing utility operations. The Contractor shall request and coordinate all utility relocations, subject to permission of the Engineer. The Contractor shall comply with all regulations, standards, methods and procedures particular to the utility organizations involved.

Utility relocation for the sole purpose of making excavation easier for the Contractor shall not be allowed. Should the Contractor desire to relocate publicly-owned utilities such as water mains, sewers and drains for the sole purpose of making excavation easier, they shall be relocated at the Contractor's expense.

PROTECTION OF TREES AND SHRUBS

The Contractor shall avoid all damage to trees along and adjacent to the work area. No tree or shrub shall be removed without the approval of the Engineer.

If during the progress of the work, the Contractor encounters any upland state-listed species on the construction site, the matter shall be immediately reported to the Engineer, the Quincy Conservation Commission, and further reported to the appropriate state agencies having jurisdiction over these matters.

All measure required for the protection of trees, shrubs and other resource areas shall be considered to be part of the work to be done under these specifications at no additional cost to the City.

PROTECTION AGAINST EROSION

The Contractor shall take precautions during construction to minimize erosion and run-off of polluting substances such as silt, clay, fuels, oils, bitumen's, and calcium chloride into the water resource areas.

Disposal of drainage shall be in an area approved by the City. Drainage water shall not be disposed of until silt and other sedimentary materials have been removed.

Stacked bales of hay shall be provided at points where drainage from the work site leaves the site to reduce the sediment content of the water. Sufficient bales of hay shall be provided such that all flow will filter through the hay. Other methods that reduce the sediment content to an equal or greater degree may be used as approved by the Engineer.

Drainage leaving the site shall flow to watercourses in such a manner to prevent erosion.

Erosion control measures must be adequate to ensure that turbidity in the receiving water will not be increased more than 10 standard turbidity units (s.t.u.), or as otherwise required by the state or other controlling body, in waters used for public water supply or fish unless limits have been

established for the particular water. In surface waters used for other purposes, the turbidity must not exceed 25 s.t.u., unless otherwise permitted.

The Contractor shall receive not direct payment for any costs incurred instituting erosion control measures, as stipulated herein or whatever is necessary to provide the necessary protection against erosion.

SITE CLEAN-UP AND DISPOSAL OF SURPLUS WASTE MATERIAL

The Contractor shall remove and dispose of all surplus and/or waste materials including surplus excavation, broken pavement, lumber, metal pipe and appurtenances, old equipment, temporary structures, and any other refuse from the construction operations.

Stone base and/or gravel base materials, manhole/catch basin castings, valves, gates, etc., if not used in the project, will remain the property of the City of Quincy unless specifically directed by the Engineer to dispose of the materials off-site. If the City decides to keep the materials, the Contractor will be required to load and haul the materials to the DPW yard at 55 Sea Street, Quincy, at no additional cost.

In order to prevent environmental pollution arising from the construction activities, the Contractor and sub-contractors shall comply with all applicable federal, state and local laws and regulations concerning waste material disposal, as well as the specific requirements stated in this section and elsewhere in the specifications specified herein.

The disposal of excess excavated materials in wetlands, stream corridors, and plains is strictly prohibited even if the permission of the property owner is obtained. Any violation of this restriction by the Contractor or its employees will be brought to the immediate attention of the responsible regulatory agency, with a request that appropriate action be taken against the offending parties.

All new and existing interfacing pipe lines, appurtenant structures within the project limits and the adjacent effected section shall be left in a clean and operable condition at the completion of the work. It shall be the responsibility of the Contractor to make certain that the new systems carrying run-off, sewage and water (as applicable) within the limits of this project operate efficiently to their points of discharge into the existing system. The Contractor without additional compensation shall remove all debris in pipes and structures as a result of the Contractor's operations.

TEMPORARY CONSTRUCTION FACILITIES

DESCRIPTION

The Contractor shall provide all temporary construction support facilities and controls, such as staging area, project signs, temporary access road, temporary stockpile areas, pre-construction surveys and bench mark and base lines to control and to layout the works as necessary and as specified or as directed by the Engineer. The contractor shall also provide all utility services and miscellaneous supplies required for satisfactory control of the works.

CONTRACTOR'S STAGING AREA

The Contractor's attention is directed to the fact that the City will not provide a staging area for the storage of construction plant equipment, material or supplies. All permits required for selection of staging area and the Contractor must obtain its proposed use from the local or State agencies having jurisdiction over the area. The cost of obtaining a staging area and the associated permits shall be considered to be included in the bid prices for the various items of work as listed in the Bid Form.

At no time shall any material, equipment, construction plant be stored on the beaches, public streets, private ways, sidewalks and other public areas.

The Contractor shall not enter or occupy private land outside of easements, except by permission of the landowner and the approving public agencies.

Only the equipment and materials ready for incorporation into the work shall be delivered and temporarily stacked on site. All materials and equipment thus delivered shall be placed so as not to injure any part of the work or the existing facilities and such that free access can be had at all times to all parts of the work.

All unrelated or idle construction plant waste and/or excess materials shall be removed from the site immediately.

TEMPORARY ACCESS ROADS

The Contractor shall construct temporary access/haul roads and temporary equipment and material storage area where needed or as directed by the Engineer to move men, equipment and materials to otherwise inaccessible or hard to reach areas. Such facilities where located in environmentally sensitive areas shall be as permitted by the Quincy Conservation Commission and subject to its regular monitoring, completion inspection and restoration to original conditions.

PROJECT SIGN

The Contractor shall furnish and install signs at the project site and at other locations as directed by the Engineer. The sign shall be made of 3/4-inch thick exterior grade high-density overlay plywood, and shall be mounted on 4-in. x 4-in. wooden posts. The sign shall be 4-ft. x 8-ft. in size and shall have a blue background and white letters. The text and its layout shall be provided to the Contractor before the start of Work.

Letter size shall be in proportion to layout and text and shall be of professional quality. The Contractor shall maintain the sign (including repainting), in a satisfactory condition for the life of this Contract.

Upon completion of the project and when directed, the sign shall become the property of the Contractor and shall be satisfactorily removed and disposed of by the Contractor off the site. The costs of furnishing, erecting, and maintaining the project sign shall be considered to be included in the bid prices for the various items of work listed in the Bid Form. For layout of project sign, please refer to Appendices.

REMOVAL OF TEMPORARY BUILDINGS AND EQUIPMENT

On or before the completion of the work, the Contractor shall, unless otherwise especially directed or permitted in writing, tear down and remove all temporary buildings and structures. The Contractor shall remove all temporary roads, staging areas, including tools and construction equipment from the site. The Contractor shall remove/cover all organic matter and waste materials in, under and around privies, houses, and other buildings. The Contractor shall remove all rubbish and waste materials from the site and leave the area and adjacent properties in a neat and satisfactory condition.

MEASUREMENT AND PAYMENT

This section supplements, as applicable, the measurements and payment provisions for each of the pay items under Part 4: Compensation under Division II: Technical Specifications. The provisions of this section shall apply to all work items under this contract.

The following activities, whether or not explicitly stated elsewhere in these documents, shall be understood to be included under the relevant Pay Items in the Bid Form to which the activity is directly or indirectly incidental to or necessary for a satisfactory completion of the item.

- The Contractor shall acquaint itself with all work associated with each Pay Item and shall no claims based on unfamiliarity with the detailed scope of work, complexity of operations or other site-specific conditions.

- Each lump sum or unit price stated in the Bid Form shall constitute full compensation for the item and shall include all work required for or incidental to or mandated by the applicable codes, permits, regulations and laws to complete the work items satisfactorily in accordance with the drawings, specifications and/or the current industry standards of performance and workmanship.

- Such activities, whether or not expressly stated in the contract documents, shall not be paid for separately unless specified otherwise.

- All public/private agency permits not included herein but necessary to carry out the work under this contract shall be obtained by the Contractor at its own expense.

- All excavation, backfilling, compaction of excavated and borrow materials required for the installation of all pipes and appurtenant structures (sewer, water and drain lines, catch basins, manholes, handholes, conduit, ducts, test pits, planting pits, signage and fence posts, fire alarm, etc.) shall be considered included in the contract unit prices/lump sums stated in the Bid Form.

- All excavations and backfilling required to remove unsuitable materials below grade shown on the drawings shall be considered included in the lump sum price. However, the City shall make available to the Contractor all crushed rock/gravel required to backfill this extra excavation.

- All existing improvements (loamed and grassed areas, bushes, landscapes, roadways or other surfaces), facilities/amenities damaged due to the Contractor's operations shall be restored at the Contractor's expense regardless of whether the damage is accidental, deliberate and/or due to construction work.

- Testing requirements for all materials, equipment and new work (quality and workmanship) under this contract shall be as specified herein, or as per the applicable codes, standards and regulations, as related to each item. All such testing, when ordered by the Engineer, shall be at the Contractor's expense.

- The services of manufacturers representatives and supervisory personnel required to insure correct equipment/instrument/appurtenance installation, testing and operations including training of the City Personnel and preparation of Operations/Maintenance Manuals shall not be paid for separately. All costs associated with these activities shall be considered included in the lump sum price.

- All work associated with the clean up of site and new construction/ maintenance of roads and utility services during construction shall be at the Contractors expense.

- All waste and unsuitable materials resulting from any item of work within the contract scope or from any other action related to the Contractors operations shall be disposed of by the Contractor at no cost to the City.

  All useable materials, when declared surplus by the Engineer, shall either be disposed of off-site or transported and stockpiled at the DPW Yard or in another suitable area as directed by the Engineer at no additional cost to the City.

During construction all costs associated with temporary sheeting, bracing, shoring, underpinning, decking, cofferdamming, drainage and disposal of water from pumping/dewatering operations in excavations, and foundations, site clean-up and removal of waste/surplus materials, temporary and final settings of all castings (utility manholes, catch basins, hand holes, gate boxes, etc.) shall be considered included in the contract lump sum price.

BASIS OF MEASUREMENT

Before the contract award, the Contractor shall submit (for lump sum contract/items only) to the Engineer, in triplicate, an itemized cost breakdown on all (significant contracts) work items. The cost breakdown for each item shall be reviewed and approved by the Engineer. When approved, the itemized breakdown shall become the basis for determining the progress payments and for negotiating change orders, if necessary.

Measurement for work under this contract shall be done either in units as specified for each pay item in the Bid Form on the basis of percentage of the total works. The measurements/percentages shall be calculated by the Contractor and verified and agreed to by the Engineer.

Said verification may be through mathematical calculations, payment vouchers, delivery receipts, field notes and/or actual inspection reports. The Contractor shall supply this information, as required, to determine the quantities/percentages for payment.

All extra work shall be authorized in writing before the work is performed. All such work shall be paid for on the basis of the contract lump sum price breakdown/the contract unit prices as set forth in the Bid Form.

No allowance shall be made for shrinkage, swelling, or voids for borrow materials, such as ordinary borrow, gravel, crushed stone, coarse aggregates, loam and other similar materials.

For purposes of conversion, the average unit weight for such materials shall be at 130 lbs. /cu.ft. The average unit weight for rock materials (i.e. stones, stone chips, boulders and rocks) shall be at 170 lbs./cu.ft.

BASIS OF PAYMENT

Payments shall be made for the actual work performed, in place and accepted by the Engineer. The payment shall be in accordance with the unit prices or lump sums as stated in the Bid Form. Payment for lump sum items shall be on the basis of a percentage of pay items completed, which shall be determined on the basis of the itemized cost breakdown agreed to above. No allowance or payment shall be made for any materials or equipment delivered and stored on site or for any materials, equipment or item of work, including labor and services, which are not incorporated in the work, unless specifically agreed to an approved by the Engineer.

PARTIAL PAYMENTS

Upon presentation by the Contractor of certified copies of paid invoices, the Contractor may include in his Application for Payment to the City, advance payments for acceptable reinforcing steel, structural steel, stone, piles, culvert pipe or other non-perishable materials purchased expressly for the work and delivered on the work or in approved storage place at the site, but which materials are not considered as erected or complete in place under the items of the Contract, and for which partial payment would not be made until such materials and items were erected or complete in place.

If it is impossible due to lack of area on the site or other valid reason, the Contractor may request in writing, permission from the Engineer to store materials off the site and still have the materials pad as material on hand and the engineer may approve payment. This request will state the reason for the request, location of proposed storage site, methods that will be employed to insure that material is properly protected and the materials will be used on the particular project and any other information as may be deemed necessary in order to evaluate the request. No advance payment for material stored off site will be made until written approval of the Engineer has been obtained. The amount to be included in the Application for Payment will be determined by the Engineer up to a maximum of 100% of the value of the materials as shown by the certified copies of the paid invoices. Payments will not be approved when the invoice value of such material as determined by the Engineer, amounts to less than $1,000.

INCREASED OR DECREASED CONTRACT QUANTITIES

The City reserves the right to increase or decrease the quantity of any particular Item of Work.

Where the quantity of a Unit Price pay item in this Contract is an estimated quantity and where the actual quantity of such pay item varies more than twenty-five (25%) percent above or below the estimated quantity stated in this Contract, an equitable adjustment in the Contract Price for that pay item shall be negotiated upon demand of either party. The equitable adjustment shall be strictly based upon any increase or decrease due solely to the variation above one hundred twenty-five

(125%) percent or below seventy-five (75%) percent of the estimated quantity. In this regard, no allowances will be made for loss of anticipated profits suffered or claimed by the Contractor resulting directly or indirectly from such increased or decreased quantities or from unbalanced allocation among the contract items from any other cause.

APPLICATION FOR PAYMENT

After the percentages of the total work to be invoiced have been verified and accepted by the Engineer, the application for payment shall be submitted in writing to the Engineer for final review and processing. Except for special permission, all applications for payment shall be on a "once a month" basis.

The Engineer shall have ten (10) working days to review the application for correctness of quantities figures, completeness of supporting documentation and recommending the application for payment or returning application to the Contractor for additional information, revisions, and/or substantiation of amounts/quantities being invoiced.

It must be clearly understood that once a payment application is recommended for payment, it may take from 30-60 days (depending on the source of project funds) before the Contractor receives the actual payment. The Contractor shall not be eligible for any interest payments on amounts due during these periods.

Each payment application must be accompanied by the following documentation. No application for payment shall be processed unless it is prepared in accordance with the City format, is complete in all respects and is properly signed by the Contractor and the Resident Engineer.

- Monthly progress report highlighting the major activities, problems (if any) and percentage of project complete to date and the forecast completion date.

- Documentation supporting the quantities being invoiced (calculations, material/delivery slips, etc.)
- Itemized statement on cost/quantity overruns, along with justification and proof of Engineer's authorization.

- Certified payrolls for period being invoiced.

- Statements and reports on the status of minority work force, Quincy residents employed, and MBE/WBE participation and performance.

RETAINAGE

The City shall withhold, as retainage, an amount equal to five percent (5%) of each progress/partial payment amount. The total amount retained or its percentage in relation to the total contract amount may not be reduced to assure quality of work, timely project completion and to cover any project deficiencies (materials, equipment and workmanship), restoration/replacement of improvements,

facilities and amenities damaged due to Contractors operations.

The percentage and/or amount of monies retained cannot be reduced or released until the following conditions are met:

- The project is complete in all respects and all contractual obligations under Division 1, Section 01300: Submittal Requirements. A certification to this affect shall be required from both the Contractor and the Engineer before either the retainage amounts are returned or the contract closeout.

- Before the final payment, all deliverables due the City must be received and acknowledged as satisfactory by the Engineer.

- The project performance and payment bonds currently in force and shall remain in full effect from the date of project completion, as defined above, to the end of the Warranty Period, as specified or as applicable.

REIMBURSEMENT FOR CITY SERVICES

Unless a specific work or an operation is requested or authorized to be performed by the City, beyond the agreed project construction work hours (normal), the Contractor will be required to reimburse the City for the cost of services rendered by a Resident Engineer or other City Engineering/Maintenance personnel beyond the normal project work hours.

The City personnel operate on a five day work schedule, excluding Saturdays, Sundays and Legal Holidays. The telephone number for Engineering/Construction personnel is (617) 376-1950. The telephone number for the Maintenance personnel is (617) 376-1925.

The Contractor shall be required to reimburse the City for the services of traffic police where it is beyond agreed hours, necessitated for the convenience of the Contractor, or because the Contractor is behind schedule and is on make-up schedule, or site management/control by the Contractor is causing hardship and safety concerns for an orderly conduct of business activities and public safety.

SPECIAL PROVISIONS

GENERAL OBLIGATIONS OF THE CONTRACTOR

The Contractor shall submit to the City, within ten (10) days after the execution of the Contract, written proof that the specified materials and equipment required for this project have been ordered and shall be delivered to the site on a specified date.

No increase in unit bid prices will be allowed, should the Contractor be delayed in commencing project construction due to the unavailability of specified materials or equipment.

LIQUIDATED DAMAGES

In case the Contractor fails to complete the work satisfactorily on or before the stipulated completion date, the Contractor agrees that the City will deduct from payments due the Contractor each month an amount equal to $1,000.00 for each calendar day in which the Work, as described herein, is not completed after the stipulated time. If payments due the Contractor, and in case such damages exceed the amount of all monies due or to become due the Contractor, the Contractor or its Surety shall pay the balance to the City.

CHANGE IN THE AMOUNT OF WORK

The City reserves the right to delete all or a portion of the Work or to increase or decrease the scope of any item of work to be done under this contract either prior to executing the Contractor or at any item during the life of the Contract. Exercise by the City of the above rights shall not constitute any grounds or basis for claims for damages or for loss of anticipated profits.

Also, an increase or a decrease of quantity for any bid item, regardless of its magnitude, shall not be regarded as a grounds for an increase or decrease in the contract unit prices, nor on the time allowed for the completion of the Work except as provided for in the Contract.

Where a change in design is required by improper construction or is requested by the Contract, the Contractor shall reimburse the City for the costs of such redesign or for the review of the Contractors proposed redesign.

SEQUENCE OF CONSTRUCTION

All work on Saturdays, Sundays and legal holidays and beyond the agreed work hours shall require approval by the Engineer prior to the start of the Work. Work on Saturdays, Sundays and/or legal holidays may be authorized or required by the City or if it is needed to correct an emergency or a dangerous condition.

The Contractor shall not be allowed uncontrolled use of public rights of way and amenities. All construction activities within the project area shall be confined to specific sections agreed

beforehand in meetings with the Engineer and/or other entities such as area business associations, community groups or other interested agencies. The Engineer has the right to reschedule the work in a different area as warranted in the best interests of the City, local residents and the general public.

SITE INVESTIGATIONS

The Contractor shall satisfy itself as to the conditions existing within the project area, the type of equipment required to perform the work, the character, quality and quantity of the surface and sub-surface materials to be encountered insofar as this information is reasonably ascertainable from an inspection of the site, as well as from information presented by the drawings, specifications, and other record information.

The information presented in the specifications and on the drawings pertaining to the surface and sub-soil conditions, topography or other matters is given to assist the Contractor in properly evaluating the amount, complexity, and character of the work required hereunder. The City assumes no responsibility for the accuracy thereof. Such data is represented as being the best information available.

It is understood and agreed that the Contractor, by careful examination, has satisfied itself as to the nature and location of the work, has examined the information (surface and sub-surface) as may be available, understands the character of equipment and facilities needed prior to and during the prosecution of the work, and the general and local conditions that affect the work under this Contract.

The City assumes no responsibility for any conclusions or interpretations made by the Contractor on the basis of the information made available by the City. No extra compensation shall be authorized for extra work caused due to the Contractors unfamiliarity with the site and/or the drawings, specifications or the conditions peculiar to the site.

CONFORMANCE WITH PLANS, SPECIFICATIONS, LINES & GRADES

The Contractor shall employ a competent engineer, registered within the state as a Professional Engineer or Land Surveyor. The Contractor shall be responsible for setting all control/base lines, grades, elevations, referenced marks, batter boards, etc. needed by the Contractor during construction. The Contractor shall set or reset, if necessary, at its own expense, such batter boards, additional grade stakes, pins, forms, materials, and labor as may be required.

The Contractor shall furnish to the Engineer such assistance as may be needed for checking lines and grades and making other measurements in connection with the Work and/or payments for such work.

The Contractor shall be responsible to make all field measurements and check all dimensions necessary for the proper fit and construction of the work called for in the drawings and specifications.

The dimensions shown on the drawings, specifically with regard to valve parts and their installation details, are only approximate. The Contractor shall field verify all dimensions and clearances before ordering and/or fabrication of the equipment.

For the purposes of observing work that affects their respective properties and/or interests, the City staff and other public agencies shall be permitted access to the work at all times, but all official orders and directives to the Contractor shall be issued by the Engineer.

PERMITS

The Contractor shall obtain all necessary agency permits, not included herein, but required for the execution of certain phases of the project. The Contractor shall fill out all forms and furnish all drawings required to obtain such permits. A copy of the approved permit shall be submitted to the Engineer. All fees associated with these permits shall be considered included in the scope of work.

PROJECT COMPLETION

In order to minimize the disruption of normal activities in the area, all construction within the project limits must be completed in all respects by the completion date stipulated in the Contract. No time extension shall be allowed beyond the completion date specified herein or agreed to subsequently in the pre-construction or other contract meetings. The provisions of this paragraph also apply to all milestone dates for various activities and items of work within the overall project completion schedule.

The Contractor must note that failure to complete the work within the period specified may result in a loss to the City, and in this case, the City shall enforce all applicable provisions in the Contract to recover such loss and safeguard its interests.

Permitting the Contractor to continue with the work after the time stipulated for its completion has expired, or after the time to which such completion may have been extended has expired, or the making of any payment of the Contractor after such time, shall in no way operate as a waiver on part of the City of any of its rights under this Contract.

CONTRACTORS RECORDS

The Contractor shall comply with Massachusetts General Law, Chapter 30, Section 39R, as explained below:

The Contractor shall retain its project records for at least six (6) years after final payment. During this period, the City, the Office of the Inspector General, and the Office of the Attorney General, Division of Labor and Workforce Development shall have the right to inspect these records. The Contractor shall notify the awarding authority of any changes in its bookkeeping and related matters along with a letter from a Certified Public Accountants (CPA). Prior to the execution of the Contract, the Contractor shall file a statement of management and internal accounting controls, which shall be maintained on file together with an annual audited financial statement.

MANUFACTURER EXPERIENCE

For all equipment supplied under this Contract, a manufacturer must have a minimum of five (5) years experience with the product. Equipment not meeting the specified experience/performance history can be considered only if the material supplier/manufacturer is willing to provide an express warranty covering all labor, parts and/or a complete assembly replacement for a period of five (5) years. This warranty shall cover repairs/replacement of defective parts or complete assemblies due to defective workmanship, failure, malfunction and/or substandard performance.

It is the Contractors responsibility to make the manufacturer and/or the vendor award of these regulations.

EQUIPMENT WARRANTIES

The Contractor shall be responsible for obtaining the manufacturers warranty certifying that the equipment as supplied meets the specifications, is of quality construction, and is free from defects in material and workmanship.

The equipment, apparatus and parts furnished shall be warranted for a period of 5 years, excepting only those items that are normally consumed in service, such as oil, grease, packing, gaskets, O-rings, etc. The equipment manufacturer shall be solely responsible for the warranty of all system components.

Components failing to perform as specified, or as represented by the manufacturer, or are proven defective in service during the warranty period, shall be replaced or repaired by the manufacturer at no cost to the City.

All equipment delivered to the job is subject to Engineers inspection. Any changes necessary because equipment delivered to this job is not in accordance with approved drawings, shall be removed from the site at the Contractors expense.

MANUFACTURER=S QUALIFICATIONS

In addition to requirements for providing services of AManufacturers Representative, the manufacturer shall provide trained supervisors to assist in installation of equipment supplied and related appurtenances, to provide initial start-up and to instruct the City personnel in the operation and maintenance of the equipment.

Field acceptance tests shall be performed as specified in each section of these specifications.

All equipment supplied shall be a manufacturers standard product with a proven satisfactory operations history and presently in commercial production. All equipment specified with a particular category shall be furnished by a single supplier and shall be products of manufacturers regularly engage in the production of such equipment.

Any reference to a specific manufacturer or model number is for the purpose of establishing a quality and performance parameters only and is not to be considered proprietary. Any source or device that has the quality and performance criteria as specified may be acceptable.

All equipment, parts, assemblies, and/or appurtenances shall conform to specifications and/or performance requirements in relation to workmanship, materials, installation and equipment. All equipment must meet all local, state, underwriters laboratories, local utility company standards, and other applicable codes, whether or not called for on the drawings or in these specifications.

Wherever the materials to be used are not shown or specified, the use of unspecified materials shall be based on their continuous and successful use and satisfactory performance at the proposed location and similar operating conditions.

All materials used within the entire pumping installation shall be compatible (no dissimilar metals), corrosion and abrasion resistant and long lasting for seawater installations, subject to continuous wetting and drying.

SUBMITTALS AND OPERATIONS/MAINTENANCE MANUALS

Whether specifically called for or not, the Contractor shall submit Operation/Maintenance Manuals and technical submittals/shop drawings for all significant items/pieces of equipment to the Engineer, as stipulated under Section 01300, Submittals Requirements.

PIPE SEPARATION REQUIREMENTS

Water main relocation is not required if a water main has a minimum horizontal separation from a new sewer of at least 10-ft. or is above a new sewer with a vertical clearance greater than or equal to 18-inch. Where the vertical clearance is less than 18-inch and an existing water main crosses over or through the proposed new sewer, the water main shall be relocated as shown in the Contract Drawing details. If the sewer crosses over the water main, regardless of the vertical separation, both pipes shall be concrete encased for a distance of 10 ft. either side of the respective centerline. The use of restrained joints on ductile iron water pipe will be acceptable in lieu of concrete encasement.

LAWS AND REGULATIONS

It is imperative that the Contractor is aware of and enforces all applicable federal, state, local and municipal laws, ordinances and regulations in relation to its employees, the materials used in the work, or the product/equipment performance.

If any discrepancy or inconsistency is discovered in the plans, drawings, specifications, or contract documents for the work in relation to any such laws, ordinances, regulations, orders or decrees, the Contractor shall immediately notify Engineer of the conflict and seek its expeditious resolution. The Contractor shall, however, comply with all laws, ordinances, regulations, orders and decrees at all times. The Contractor shall also protect and indemnify the City and its officers, agents, and servants

against any claim or liability arising from or based on the violation of any such laws, ordinances, regulations, orders, or decrees, whether by itself or its subcontractors or employees.

Each and every provision of law referred to in this section shall be read and enforced as though it were included herein, and if through mistake or otherwise, any such provision is not inserted or if not correctly inserted, then upon the application of either party, the Contract shall forthwith be physically amended to make such insertion.

The provision of Chapter 30, Section 39M of the Massachusetts General Laws, as last revised, shall be understood to be a part of this contract.

The Contractor shall comply with the requirements of Massachusetts General Law Chapter 353 and the Acts of 1983 as related to Excavations in Public Ways.

The Contractor shall enforce all the required safety measures as per AASHTO Guide on Occupational Safety on Highway Construction Projects, sub-part N.1926.550, relating to construction equipment clearances at overhead electric lines, which state in part, A... the minimum clearance between the lines and any part of the crane or load must be at least 10 feet from line rates of 50KV or below, or greater resistances for higher voltage.

Equipment utilized by the Contractor shall conform to the General Services Administration Construction Noise Specifications as effective on January 1, 1975, for stationary equipment. Equipment must not exceed 75 decibels (A) when measured at a distance of 50 feet from the noise source. The Contractor shall have construction sound enclosures or utilize other noise reduction techniques if the equipment does not meet the noise level requirements. No separate payment shall be made for this item.

The Contractor is subject to the requirements of the Clean Air Act, as amended, 42 U.S.C. 1857 et.seg; the Federal Water Pollution Control Act, as amended, 33 U.S.C. 1251 et.seg; and the regulations of the Environmental Protection Agency with respect thereto, as CFR Part 15, as amended from time to time.

The Contractor agrees that any facility to be utilized in the performance of any non-exempt contract or sub-contract shall not be listed on the List of Violating Facilities issued by the Environmental Protection Agency (EPA) pursuant to 40CFR 15.20.

The Contractor agrees to comply with all the requirements of Section 114 of the Clean Air Act, as amended (42 U.S.C. 1857c8) and Section 308 of the Federal Water Pollution Control Act, as amended (33 U.S.C. 1318), relating to inspection, monitoring, entry, reports and information, as well as all regulations and guidelines issued thereunder.

In accordance with applicable laws, the Contractor shall furnish labor that can work in harmony with all other elements of labor employed or to be employed on the work and that he/she will comply fully with all laws and regulations applicable to awards made subject to M.G.L., Chapter 149, Section 44A. Without limiting the generality of the foregoing, ALabor Harmony shall include the provision

of labor that will not cause, cause to be threatened or give rise to either directly or indirectly, any work disruption, slow-downs or stoppages by employees of other Contractors, while performing any work or activities incidental thereto.

The Contractor must comply with all requirements of Massachusetts Prevailing Wage Laws, M.G.L. c149, ɜɜ26 and 27; and the Equal Employment Opportunity and Anti-Discrimination Policies (EOEA) of the Commonwealth of Massachusetts 301. CMR 50.00.

CITY OF QUINCY ORDINANCES AND POLICIES

The City of Quincy Blasting Ordinance, wherever applicable, shall be enforced on all projects located within the City limits. (Reference City Council Order No. 236 of 1988)

The City of Quincy Ordinance requiring hiring of Quincy residents on all projects with a valuation of over 250,000.00 shall be enforced, as applicable. (Reference City Council Order No. 532, 245 and 264)

The City of Quincy Ordinance with regard to Apprenticeship Training Programs shall be enforced, as applicable. (Reference City Council Order No. 970104.)

The Contractor must comply with the City's policies regarding MBE/WBE participation and Minority Workforce Participation, which are included elsewhere as part of this contract.

Reference is made to the City's Responsible Employer Ordinance (Reference City Council Order No. 2000-078 and 2006-034)

SUBMITTAL REQUIREMENTS

DESCRIPTION OF REQUIREMENTS

This Section specifies the general requirements for technical and other submittals as related to materials, methods, equipment/appurtenances, special procedures and contract administrative matters. Typical submittals include shop drawings; product data; procedures for various treatments/workmanship and temporary work and facilities; contract schedules, reports, correspondence and similar activities. Additional submittal requirements are listed under the General Conditions.

CONSTRUCTION SCHEDULES

The Contractor shall, within ten (10) days after the effective date of the Agreement, submit to the Engineer for approval, a detailed manpower, equipment and construction activity schedule to complete the work within the time allowed. The Contractor shall update the schedule every two weeks and resubmit the same duplicate until the project is completed. The Contractors progress schedule shall show the actual project progress as percentage of the total project vs. Contract completion time.

The Contractor shall also be required to submit, each month, a written project progress report, details of cost/quantity overruns where applicable, certified payrolls and the MBE/WBE minority work force and Quincy residents employee and Contractors apprenticeship training program information with each pay estimate.

SHOP DRAWINGS

Shop drawings, as defined in the General Conditions, and as specified herein include, but are not necessarily limited to: custom-prepared data such as equipment design basis, manufacturer data sheets, wiring and logic diagrams, equipment characteristics/performance data, fabrication and erection/installation drawings, dimensions, equipment setting diagrams, manufacturer instructions, custom templates, name plates, terminal block arrangements, instrumentation and controls, foundation details, vibro isolators, coordination drawings, system/equipment inspection and test reports, including required certifications, as applicable.

Typical items requiring shop drawings are pumps, motors, tide gates, generators, transfer switches, control/instrumentation panels, power and lighting systems, valves, gates, alarm, relays and control systems.

Other items requiring shop drawings may include installation details as related to pipelines, fittings, appurtenances, electrical duct/conduit, wiring and cables and structural details (rebar, bending schedules, street slopes, sections and concrete mixes, etc.).

PRODUCT DATA

Product data as defined herein include, but are not necessarily limited to: manufacturer standard product samples and product data, such as assembly instructions, materials, printed performance curves and operational-range diagrams based on actual shop tests (head capacity, efficiency, NPSH and horsepower, etc.), production/ quality control, inspection/test reports, certifications, mill reports, operation and maintenance instructions, recommended spare-part list, and printed product warranties, as applicable.
Also included is the total weight of equipment including the weight of the largest components and total bill of materials for all equipment.

SPECIAL PROCEDURES

Special procedures as defined herein include, but are not necessarily limited to certain non-standard and site specific construction methods, that may, for example, be required in certain situations for deep excavations/embankments, piling, dewatering, shoring, sheeting, detours, traffic management and other temporary works and facilities.

CONTRACT ADMINISTRATION

Contract administration activities as defined herein include, but are not necessarily limited to all contract correspondence, invoices, reports on labor, equipment, schedules, estimates, forecast cash flows, claims and change orders, etc.

CONTRACTOR'S RESPONSIBILITIES

The Contractor shall review all shop drawings, product data/ samples prior to submission and verify that:
1.) Actual field measurements and dimensions are compatible.
2.) Service/design conditions are met.
3.) Deviations from specifications, if any, are clearly stated.
4.) The item/equipment/material conforms to the specifications.

Each shop drawings, product sample and catalog data submitted by the Contractor shall be signed certifying that:

AI hereby represent that I have determined and verified all field measurements, field construction criteria, materials, dimensions, catalog numbers and similar data and I have checked and coordinated each item with other applicable approved shop drawings and all Contract requirements."

Shop drawings not complying with the above shall be returned. The Engineer review shall be only for general conformance with the specification and design concept. This review does not constitute a rigorous design check.

The review and approval of shop drawings, samples or catalog data by the Engineer shall not relieve the Contractor from its responsibility from providing materials, equipment and level of workmanship, as specified.

No portion of the work requiring a shop drawings, sample, or catalog data shall be started nor shall any materials be fabricated or installed prior to approval by the Engineer. All fabrication, materials, or on-site construction not conforming to approve shop drawings and data shall be corrected at the Contractor's expense.

In the case of a pump station project, the Contractor shall provide the following additional information for review and approval by the Engineer:

- Construction procedures for foundations and piling installation, where applicable.
- Concrete test cylinder reports certifying that concrete used in the structure conforms to the strength requirements specified.
- Complete wiring diagrams and schematics for all power and control systems, controllers, control panels, and control devices.
- Details on all items to be supplied and installed as part of the pumping station/tide gate systems as specified.
- Complete description of all non-conforming components of the proposed system and their overall impact on the system operation, performance and efficiency.

SYSTEM TESTING, OPERATIONS & MAINTENANCE

The Contractor shall be responsible for conducting all start-up and operation tests as specified or as directed. All tests shall comply with the following:

- All laboratory test of material, finished items, or equipment shall be made by bureaus, laboratories, or agencies approved by the City and copies of all test reports shall be submitted in duplicate by the laboratory to the City. The Contractor shall pay the cost of such tests.
- Any additional test required beyond those required under these specifications may be ordered by the Engineer to settle disagreements with the Contractor. If the work/equipment/material is defective, the Contractor shall pay all costs of the extra tests and shall correct the work. If the work is satisfactory, the City will pay for the additional tests.
- All start-up and commissioning tests shall be conducted as specified for each individual component separately and then for the total system as a whole. All start-up and commissioning tests shall be conducted under factory-trained supervision and certified as in compliance with the specifications and requirements.

OPERATION AND MAINTENANCE INSTRUCTIONS

The Contractor shall be responsible for supplying six (6) copies of written operations and maintenance manuals. The manuals shall be comprehensive enough to operate and maintain the pumps, tide gates, and control systems (electrical, electronic, and other systems and the associated equipment).

The instructions shall be prepared as a systems manual applicable solely to a particular system and all equipment related to it. The manual shall include, as a minimum:

- General systems descriptions along with operating instructions for each major system component, as applicable or as determined by the Engineer.

- Instructions for all adjustments, calibrations and/or testing which must be performed at initial system start-up, along with adjustments to be made after the replacement of key components and adjustments which must be made in the course of preventive maintenance, as specified by the manufacturer.

- Service instructions for major components not manufactured by the main equipment manufacturer.

- Electrical schematic diagrams as supplied, prepared in accordance with NMTBA and JIC Standards. Schematics shall show, to the extent of authorized repair, pump motor branch, control and alarm system circuits and interconnections among these circuits. Wire numbers shall be shown on the schematic.

  Schematic diagrams for electronic equipment, the detail parts of which are normally repairable by the station operator, need to be included and shall not be substituted for an overall schematic diagram.

- Complete equipment characteristics and performance data on pumps, motors, generators, gas/diesel engines and other parts/equipment shall be included in the operations/maintenance manual.

- Facility layout drawings should shown locations of all equipment such as pumps, motors, valves, piping, bar racks and other items.

- List of spare and consumable parts, with part numbers, along with addresses of local suppliers.

SPECIAL TOOLS AND LUBRICANTS

During testing and prior to acceptance, the Contractor shall furnish all lubricants necessary for the proper lubrication of all equipment. For each type of equipment furnished, the Contractor shall provide a complete set of all special tools (including grease guns or other lubricating devices), necessary for the adjustment, operation, maintenance and disassembly of such equipment.

The Contractor shall furnish and install one or more steel wall cases with flat key locks and clips/hooks to hold each tool in a convenient arrangement.

REQUIREMENTS FOR SUBMITTALS

The Contractor shall make submittals, in triplicate, in accordance with approved schedule, and in a sequence that would not cause any delays. The submittals shall contain: the date of submission along with the dates of any previous submission(s); the project title; and the submittal identification number

and title.
The submittals shall also include: the names of the Contractor, supplier, and the manufacturer, along with identifying the product, with the specification section number, significant dimensions, standards, (ASTM or Federal Specification Number), and a listing of all deviations from Contract Specifications.

SUBMITTAL PROCESSING

The Contractor shall make any corrections or changes in the submittals required by the Engineer and resubmit until approved. The reproductions of approved submittals shall be distributed per the project procedures.

CONTRACT CLOSE-OUT

The Contractor shall provide to the Engineer the following before the close of the contract and before submitting the final application for payment.

- Correspondence and back up for change orders and field changes.
- Complete file of approved shop/erection drawings and wiring diagrams.
- Log of all material and equipment delivered, including certificates and test results, as applicable.
- Copies of all requisitions for payment, along with detailed substantiation of all quantity and cost overruns.
- All labor and wage notices required by law.
- All initial, interim and final reports on Minority Workers (MBE's, WBE's, and the percentage of City of Quincy residents employed under the contract).
- All operation and maintenance manuals for all equipment supplied, including a list of spare parts with part numbers and supplier's address.
- Two sets of reproducible as-built drawings, and copies of all materials/equipment, work quality and other tests/systems.
- All additional permits not included in these specifications, including the Street Opening Permit.
- Description of location and ties to survey markers and monuments installed under the contract.
- Final reports on the corrective work based on the deficiencies noted during the initial and final acceptance, walk-through, inspections and tests.
- Delivery of spare parts, as specified.

USE AND CONTROL OF MATERIALS

DESCRIPTION

The work under this Item shall conform to the relevant provisions of Sections 6.00, 500.64, 630.63, 665.62, and 815.65 of the Standard Specifications, requirements of this section and the work as shown or as directed.

MATERIALS - APPROVALS - INSPECTIONS

Unless otherwise expressly specified, only new materials and equipment shall be incorporated in the works. All materials and equipment to be incorporated in the work shall be subject to inspections and tests by the Engineer. No material shall be installed, fabricated or delivered to the work site without prior concurrence of the Engineer.

As soon as possible after execution of the Agreement, the Contractor shall submit to the Engineer the names and addresses of the manufacturers/suppliers of all materials and equipment to be incorporated into the work. The Contractor shall submit prior to the placement of orders, data in sufficient detail to enable the Engineer to determine whether the manufacturer and/or the supplier have the ability to furnish a product meeting the Specifications.

The Contractor shall also submit data relating to the materials and equipment, including the optional items in sufficient detail to enable the Engineer to evaluate the particular product and to determine whether it conforms to the Contract requirements.

The Contractor shall furnish promptly all labor, materials, laboratory and other facilities to perform all inspections and tests to determine the acceptability of equipment and materials.

When directed by the Engineer, the Contractor shall submit samples of materials, equipment for quality workmanship, and other special test results as the Engineer deems necessary to assure conformance with the specifications. All samples shall be furnished, taken, stored, packed, and shipped by the Contractor as directed. The Contractor shall furnish the required laboratory services to test the samples at no additional cost to the City.

All samples shall be labeled to indicate the materials, the name of the building or work and location from where the sample was taken, and the name of the Contractor submitting the sample.

The Contractor shall submit data and samples, or place orders, sufficiently early to permit inspection and testing before the materials and equipment are needed for incorporation in the work. The consequences of failure to do so shall be the Contractor's sole responsibility.

When required, the Contractor shall furnish to the Engineer in triplicate, certified copies of manufacturer's shop, mill tests, reports from independent testing laboratories and other relevant data for materials and equipment furnished under the contract.

HAULING, HANDLING, STORAGE AND DISTRIBUTION OF MATERIALS

The Contractor shall handle and haul all materials furnished and remove all surplus materials at the completion of the work. The Contractor shall provide suitable and adequate storage for all equipment and materials and shall be responsible for any loss of or damage to any equipment or materials. The Contractor shall be responsible for all damages to the work under construction during its progress and until completion and acceptance even though partial payments have been made under the contract.

All suitable excavated materials not reused as backfill shall remain the property of the entire City and shall be stockpiled at a site provided by the City. The Engineer will determine material suitability.

Cement, lime, salts and other such materials shall be stored above the ground, properly covered, and kept completely dry at all times. All structural, miscellaneous, reinforcing steel shall be stored above the ground to prevent accumulations of dirt or grease, and in a position to prevent accumulations of standing water and to minimize rusting. Beams shall be stored in a manner to prevent accumulations of dirt, standing water, staining, chipping or cracking. Bricks, block and similar masonry products shall be handled and stored to prevent breakage, chipping, cracking and spalling.

All mechanical equipment subject to corrosive damage, if stored outdoors (even though covered by canvas), shall be stored in a building to prevent injury. The building may be a temporary structure on the site or elsewhere but it must be satisfactory to the Engineer.

All materials which have become so damaged as to be unfit for the use intended as specified shall be promptly removed from the site of the work, and the Contractor shall receive no compensation for the damaged material or its removal.

Storage and demurrage charges by transportation companies and vendors shall be borne by the Contractor.

MATERIALS AND EQUIPMENT REMOVED AND STORED

All electrical cable, traffic control devices, controllers, material, and equipment removed form the existing signal installation and not required for the completion of this contract, and all other materials directed to be removed and stacked shall be carefully dismantled and stacked at designated locations, and hauled to the City maintenance yard as directed by the Engineer.

An inventory of materials to be delivered shall be made out by the Contractor, countersigned by the Engineer, and submitted to the person and/or persons receiving the materials at the DPW Yard.
If the Engineer determines that any part of the stacked materials are unsuitable for re-use, or if the City decides to abandon part or all or such materials, said materials shall become the property of the

Contractor and these materials/equipment shall be disposed of at no additional cost to the City.

REJECTED MATERIALS AND DEFECTIVE WORK

Materials furnished by the contractor and condemned by the Engineer as unsuitable or not in conformance with the specifications shall forthwith be removed from the site and shall not be used elsewhere on the project.

Any errors, defects or omissions in the execution of the work or in the materials furnished by the Contractor, even though they may have been approved, overlooked, discovered after installation, or already paid for, shall be forthwith rectified satisfactorily at the Contractor's expense.

ENVIRONMENTAL PROTECTION

DESCRIPTION

The Work under this section shall consist of all environmental mitigation measures designed to minimize various types of pollution and resource area contamination, including airborne dust, equipment noise, drainage and soil erosion, alteration/damaging or dumping hazardous waste or rubbish in resource areas. The Contractor shall furnish all labor, materials, tools and equipment and perform all work required for the prevention of environmental pollution resulting from its construction operations.

The requirements set forth in this section are intended to minimize the adverse impacts on populated and cross-country areas, stream crossings, coastal areas, beaches, flood plains, marshes, wetlands, wild life and marine life due to construction activities in and adjacent to all resource areas.

All work shall be in accordance with the applicable Local, State and Federal laws and regulations and the Quincy Conservation Commission's Order of Conditions.

NOTIFICATION

The Engineer will notify the Contractor in writing of any non-compliance with the foregoing provisions. The Contractor shall, after receipt of such notice, immediately take corrective action. In case of non-compliance, the Engineer will order stoppage of all or part of the work until satisfactorily corrective action has been taken. No claim for an extension of time or for extra costs or loss incurred by the Contractor as a result of time lost due to any stop orders shall be made unless it was later determined that the Contractor was in compliance.

Prior to commencement of the Work, the Contractor shall meet with the Engineer to develop mutual understandings relative to compliance of the environmental protection program.

CONSTRUCTION ACTIVITY

Insofar as possible, the Contractor shall confine all activities, including clearing, grubbing, excavation and construction of works, to those areas defined by the plans and specifications. All land resources within the project boundaries and outside the limits of permanent work performed under this contract shall be preserved in their present condition or if damaged, shall be restored to their original condition after completion of construction.

PROTECTION OF WATER RESOURCES

The Contractor shall not pollute streams, lakes or reservoirs, wetlands and beaches with fuels, oils, bitumens, calcium chloride, acids or harmful materials. It is the Contractor's responsibility to comply with all applicable Federal, State, County and Municipal laws regarding pollution of rivers/streams. Special measures should be taken to insure against spillage of any pollutants into public waters.

PROTECTION OF WETLANDS

The Contractor shall make every effort to minimize disturbances within the areas designated as wetlands. Easement widths shall be limited to the widths shown on the drawings. The Contractor shall make sure that wetlands are restored to the conditions existing prior to construction.

The Contractor shall carefully remove and stockpile the top 24-inches of soil. This topsoil material shall be used as backfill for the trench excavation top layer. The elevation of the trench is to be restored to the pre-construction elevations wherever disturbed by the Contractor.

A trench box and/or sheeting or bracing shall be used to support the excavation in wetlands.

Excavated materials shall not be permanently or temporarily stored in wetlands. Temporary storage areas for excavated materials shall be as directed by the Engineer.

The Contractor shall be required to utilize timber or rubber matting to support equipment in wetlands. The timber or rubber matting shall be constructed in such a way so that it is capable of supporting all equipment loads necessary to complete the construction work. The timber or rubber matting shall be constructed of materials and placed so that, once removed, the material below the matting is not unduly disturbed, mixed or compacted in such a way that would adversely effect the recovery of the existing plant life.

PROTECTION OF EXPOSED AREAS

The Contractor shall limit the area of land that is exposed and free from vegetation during construction. In areas where the period of exposure will be greater than two (2) months, temporary vegetation, mulching or other protective measures shall be provided as specified.

Where temporary cover crop will be used, the Contractor shall insure that materials used for temporary vegetation are adaptive to the sediment control. Materials to be used for temporary vegetation shall be approved by the Engineer.

Loaming and seeding or mulching of cross-country areas shall take place as soon after completion of work in that area as practicable. This shall be considered part of the clean-up work, and full payment for the work will not be made until it has been completed.

LOCATION OF STORAGE AREAS

No excavated materials or materials to be used in backfill operations shall be stored within a minimum distance of fifty (50) feet of any watercourse or any drainage facility.

No storage of equipment or materials shall be permitted in wetlands.

In cross-country areas when excavating in wetland or flood plain, where no temporary diversion structure is required, the excavated material shall be placed on the uphill side of the trench so that the trench serves as a barrier between the excavated material and the wetland or flood plain.

HAY BALES AND SILT FENCES

Adequate measures for erosion and sediment control such as the placement of baled hay or straw around the downstream perimeter of stockpiles shall be employed to protect downstream areas. The bales of densely packed hay with tightly bound biodegradable ties shall be installed as shown on the drawings . The bales shall be staked to prevent overturning, floatation, or displacement. All sediment deposited behind the bales of hay and silt fences shall be removed periodically.

Where shown on the drawings or as directed by the Engineer, the Contractor shall erect and maintain a temporary silt fence. In wetlands and other resource areas, the Contractor shall line the limits of the construction easement with silt fences. The silt fence shall be used specifically to contain sediment from runoff water and to minimize environmental damage caused by construction.

The silt fence shall consist of a 3-foot wide continuous length sediment control fabric, attached to a 25-foot long continuous support netting, and stapled to pre-weathered oak posts installed a shown on the drawings. The oak posts shall be 2-inches by 2-inches by 5-feet and shall be tapered. The support netting shall be industrial strength polypropylene.

The sediment control fabric should conform to the following properties:

1.	Minimum Weight of 2.5 oz/sy	(ASTM D-3776-79).
2.	Minimum Thickness of 17 mils.	(ASTM D-1777-79).
3.	Minimum tear strength of 65 lbs.	(ASTM D-1117-80).
4.	Minimum burst strength of 210 psi	(ASTM D-3786-80).
5.	Minimum coefficient of permeability of	0.0009 cm/sec.
6.	Equivalent opening size (EOS)	20. (U.S. Standard Sieve)
7.	Water flow rate of (QUITG-15)	40 gal/min/sf.

SOIL EROSION AND SEDIMENTATION CONTROLS

The Contractor shall take effective measures during construction to minimize soil erosion and silting/sedimentation in the vicinity of construction areas.

The Contractor shall not cause direct or indirect discharge of pollutants such as silt, clay, fuel oils, lubricants, cleaning agents, bitumen's, calcium chloride or any other material that may be hazardous or detrimental to watersheds, lakes, wetlands, beaches, marshes, streams, and public water, sewer and drain systems.

Site generated drainage runoff whether due to storm run-off or the Contractor's dewatering and other operations shall not be allowed to shed on to the abutting properties.

To reduce uncontrolled soil erosion, the site drainage runoff shall be conveyed through conduits, swales, gravel drains, etc., and disposed of in areas approved by the City.

Site runoffs shall not be disposed of until silt, sediment and other deleterious materials have been removed through the use of hay bales, silt fences and other methods acceptable to the Engineer.

During the course of construction, the Contractor shall, when directed, dispose, remove, relocate, or

replace the hay bales and silt fences as directed by the Engineer. The Contractor shall also be fully responsible for removal and disposal of the collected sediment and debris behind the hay bales and silt fences as directed by the Engineer. The hay bales and silt fences shall remain in place until directed by the Engineer.

Erosion control measures used for public water supply or fist culture must be adequate to ensure that turbidity in the receiving water will not be increased more than 10 standard turbidity units (s.t.u.) or as otherwise required by the State or other controlling body. In surface water used for other purposes, the turbidity must not exceed 25 s.t.u., unless permitted otherwise.

WATER HANDLING

All water discharges from the Contractor's dewatering and/or water handling operations shall be filtered prior to being discharged into a receiving water.

The water may be filtered through hay bales, a vegetative filter strip, or a vegetative channel. Discharge flow rate through these media shall not exceed one (1'/sec) foot per second. The sediment shall be cleared from the channel periodically.

If water from dewatering operations is discharged over non-vegetated land, impermeable plastic sheeting must be laid over non-vegetated areas and sediment traps constructed at strategic locations to catch sediment.

Any water discharged from the Contractor's operations must be at least equal in quality to the receiving water. If the quality of the water being discharged is unacceptable, the Contractor shall employ whatever measures necessary to provide an acceptable water quality.

All existing drainage facilities including, but not limited to, brooks, streams, canals, channels, ditches, culverts, catch basins, and drainage piping shall be adequately safeguarded so as not to impede drainage or to cause siltation of downstream areas. If the Contractor damages or impairs any of the aforesaid drainage facilities, these shall be repaired immediately.

All drainage appurtenances shall be designed to remove suspended solids, oils and other such material. Baled hay or straw must also be used to trap sediment and prevent clogging of drainage systems.

If interruption of existing drainage flows is necessary, the Contractor shall provide, maintain, and operate all temporary facilities such as dams, pumping equipment and conduits etc. required to by-pass flows past the construction area.

DUST CONTROL

During the progress of the work, the Contractor shall conduct operations to maintain a dust free environment. Measures to control dust may include sweeping and applying water to streets, as necessary, to minimize the air borne dust.

At no time shall calcium chloride or other chemicals be used for dust control.

NOISE LEVEL REQUIREMENTS

Equipment utilized by the Contractor shall conform to the General Services Administration Construction Noise Specifications, effective as of January 1, 1975, for stationary equipment. Equipment must not exceed 75 Db (A) when measured at a distance of 50 feet from the noise source. The Contractor shall construct sound enclosures or utilize other noise reduction techniques if the equipment does not meet the noise level requirements.

CLEAN AIR AND WATER POLLUTION CONTROL ACTS

The Contractor is subject to the requirements of the Clean Air Act, as amended, 42 U.S.C. 1857 et.seg; the Federal Water Pollution Control Act, as amended, 33 U.S.C. 1251 et.seg; and the regulations of the Environmental Protection Agency with respect thereto, at CFR Part 15, as amended from time to time.

1. The Contractor agrees that any facility to be utilized in the performance of any non-exempt contract or sub-contract shall not be listed on the List of Violating Facilities issued by the Environmental Protection Agency (EPA) pursuant to 40CFR 15.20.

2. The Contractor agrees to comply with all the requirements of Section 114 of the Clean Air Act, as amended (42 U.S.C. 1857 c8) and Section 308 of the Federal Water Pollution Control Act, as amended (33 U.S.C. 1318), relating to inspection, monitoring, entry, reports, and information, as well as all regulation and guidelines issued thereunder.

DIVISION TWO - INDEX
TECHNICAL SPECIFICATIONS

Section No.	Description/Title	Pay Item No.
02000	Index	
02105	Tree Stump Removal	102.090
02105	Tree Root System, Cut Back & Remove	102.190
02120	Unclassified Excavation	120.100
02120-2	Bit. Conc. Excavation by Cold Planer	129.000
02150	Gravel Borrow for Sidewalks	151.220
02170	Fine Grading & Compaction	170.000
02220	Drainage Structure, Adjust	220.000
02200	Drainage Structure, Remodel	220.500
02220	Sanitary Structure, Adjust	220.700
02200	Sanitary Structure, Remodel	220.800
02225	Replacement Frame with Grate or Cover	222.000
02350	Gate Box Adjust	358.000
02351	Service Box	381.000
02410	Gravel for Base Course	405.000
02420	Class I Bituminous Concrete – Base Course	420.000
02460	Class I Bituminous Concrete – Top Course	460.000
02460	Class I Bituminous Concrete – Leveling course	460.500
02460	Bituminous for Tack/Prime Coat	463.000
02471	Hot Mix Asphalt for Misc. Use	472.000
02472	Flexible Porous Pavement	473.000
02505	Granite Curb-Type VA-3 Straight	503.000
02505	Granite Curb-Type VA-3 Curved	503.100
02510	Granite Curb Corner	517.000
02580	Curb Removed & Reset	580.000
02580	Curb Corner Removed & Reset	583.000
02705	Cement Concrete for Walks	701.000
02705	Cement Concrete @ Drives	701.100
02705	Cement Concrete for WCR's with detectable warning panels	701.310
02710	Bituminous Concrete Sidewalks	702.100
02740	Mobilization/Demobilization @ 5%	748.000
02750	Loam Borrow	751.000
02765	Seeding	765.000
02766	Princeton Elm Tree 2.5-3" caliper	775.000
02766	Japanese Tree Lilac 2.5-3" caliper	776.000
02767	3-Inch Electrical Conduit, Type NM-plastic (UL)	804.300
02768	12in x 12in Pullbox (SD2.031)	811.310
02769	Beale/Adams St. Traffic Improvement per plan	815.010
02860	4-Inch White Line Reflectorizes Thermoplastic	866.040
02860	12-Inch White Line Reflectorizes Thermoplastic	866.120
02860	4-Inch Yellow Line Reflectorizes Thermoplastic	867.040
02910	Concrete	904.000
02990	Traffic Police Details	999.001

TREE STUMP REMOVED
TREE ROOT SYSTEM REMOVED

The work to be done under this item shall conform to the relevant provisions of Sections 100 of the Standard Specifications, all the requirements of this section and the work as shown on the drawings.

The Contractor shall furnish all labor, materials, tools and equipment necessary to expose by excavation, remove and/or cut, as required, the tree stumps and root systems to prepare the site for construction work as shown on the drawings and as directed. The work shall also include removal and disposal of stumps, roots, organic matter and the other unsuitable materials resulting from the operation.

The Contractor shall comply with the provisions of Division's One and Two of this specifications as related to protection, relocation, replacement and restoration of property, and existing utilities and appurtenances.

All work in the proximity of the existing structures, appurtenances, pipes, stairs, and other physical features shall be accomplished without damaging the integrity of remaining structures, appurtenances and equipment.

Such items that are damaged shall be either repaired or replaced at the Contractor's expense to a condition at least equal to that which existed prior to the start of his work.

All workmanship and materials for new construction and alterations shall be as specified. Materials used for repair and/or restoration work shall match the existing adjacent surfaces in finish and texture as closely as practical, and joints between new and existing work shall be made inconspicuous.

Unless directed otherwise by the Engineer, excavation required to expose the tree stump and root system shall comply with the following:

- Excavation around the tree not to exceed the width of the sidewalk.

- The depth of excavation for stump removal not to exceed 5 feet.

- The depth of excavation for removal of a tree root system not exceed 2 feet.

All root system encountered within the limits of sidewalk width as determined by the Engineer, shall be cut clean and removed. The cut surfaces of the remaining detached roots shall be painted with stump rot. The tree roots which are still attached to the trunk shall be cleaned and painted with two coats of an approved chemical root guard to protect the tree from later damage.

All waste or surplus materials resulting from the tree stump, tree root system removal and the associated operations shall be disposed of in a satisfactory manner at the Contractor's expense. The disposal of all such materials shall be carried out immediately after removal of the material and shall not be left until the final period of clean up.

Payment for work under **Item 102.09: Tree Stump Removal and Item 102.19: Tree Root System Removal** shall be at the contract unit price, per each tree location, where work is satisfactorily completed and accepted by the Engineer, which price shall be full compensation for all labor, materials and equipment required to complete all work items including excavations, removal of stumps or root systems, replacement/restoration of damaged areas and disposal of waste/surplus materials as specified in this section and all else incidental thereto.

All cost related to back fill materials and reconstruction of sidewalk and the associated work shall be paid for separately under their respective pay items.

UNCLASSIFIED EXCAVATION

The work to be done under this Item shall conform to the relevant provisions of Section 120 of the Standard Specifications and the following:

The work shall consist of the excavation and satisfactory disposal of all materials encountered within the limits of the contract except for those materials specifically classified and paid for under other items of this contract.

The work includes the excavation of existing bituminous concrete pavements, bituminous or cement concrete curbs, bituminous or cement concrete sidewalks, grassed areas, stumps, Class A Rock and trench excavation.

The edges of all excavations to be made in existing pavements and sidewalks shall be saw-cut neatly along either a straight line or design curved line as shown in the drawings. Ragged, uneven edges are not acceptable.

The Contractor shall perform all excavations in such a manner as to maintain slopes longitudinally and laterally and to ensure proper and continuous drainage at all times.

The excavation for sidewalks and other paved surfaces must be carried out in such a manner so as to maintain slopes longitudinally and laterally and to ensure proper and continuous drainage at all times. The excavation must also avoid damage to adjacent areas, facilities and appurtenances.

If during the course of the excavation, the Contractor encounters cobblestones, the excavated cobblestone shall remain the property of the City of Quincy. The entire excavated cobblestone shall be carefully stacked at the DPW Yard at no additional cost to the City. All other waste or unsuitable materials (bituminous/cement concrete, debris, rails and ties, etc) resulting from the contractor's excavation (common excavation, cold planning, reclamation, etc.) and/or the excavated materials declared surplus by the Engineer shall be disposed of by the Contractor at no additional cost to the City.

Also included under this item is the removal of any utility poles, fences, bushes, shrubs and vegetation. This work shall be considered incidental to Item 120.1 with no additional compensation. The relocation of overhead utilities from the poles to be removed shall be the responsibility of the respective utility company, unless noted otherwise on the plans.

Payment for **Item 120.1: Unclassified Excavation** shall be at the contract unit price, per Cubic Yard. This price shall be full compensation for all labor, materials, tools, equipment and incidentals including excavation to lines and grades, all construction and public safety measures and dewatering operations where required or necessary to complete the work as specified or as shown on the drawings.

The measurement and payment provisions listed under Division One, Section 01150 shall supplement the above payment provisions, as applicable.

BITUMINOUS CONCRETE EXCAVATION

The work to be done under this shall conform to the relevant provisions of Section 120 of the Standard Specifications and the following:

The work under this item shall consist of stripping and/or ordinary excavation of bituminous /cement concrete or macadam surfaces required for rehabilitative work in sidewalks, driveways, trenches, and other restricted areas. The edges of excavations or cut-back for trench repairs made in existing pavements, sidewalks and intersecting driveways shall be saw cut neatly along either a straight line or a design curved line as shown or as directed by the Engineer. Ragged, uneven edges are not acceptable. The Contractor shall be responsible for disposal of all waste materials resulting from construction operations.

Sidewalk and roadway gutter grades at driveways and side street intersections are to be field adjusted to be consistent with the existing drainage pattern and shall provide for an appropriate transition between the new and the existing (side streets and driveways) pavement surfaces at intersections.

The City's intent is to improve the existing sidewalk, driveway and roadway pavements and at the same time obtain a nominal curb reveal of seven (7") inches. In the roadway sections where curb reveal is deficient, either one or a combination of the following methods shall be used, as applicable.

a. Maintain the minimum specified (1-1/2 inches) depth of bituminous concrete top course in the central portion of the roadway and then gradually reduce the depth to a minimum 1-inch at the curb line on either side.

b. Increase the cold planing depths of cuts towards, to obtain additional curb reveal wherever necessary.

c. Reset the curb stones, if settled or dislocated. Reset curb stones shall also be compatible with sidewalk drainage and storefront entrances and driveways.

The Engineer shall be immediately notified of any deviations from the above criteria. All work shall be done as stated above or as directed by the Engineer.

Payment for work under **Item 129.11: Bituminous Concrete Excavation** shall be at the contract unit price, per Square Yard, which price shall be full compensation for all labor, materials, tools, equipment and all else incidental thereto and necessary for the satisfactory completion of the work, as specified or as directed.

The measurement and payment provisions listed under Division 1, Section 1150 shall supplement the above payment provisions as applicable.

GRAVEL BORROW FOR SIDEWALKS

The work under this Item **151.22: Gravel Borrow for Sidewalks** shall conform to the relevant provisions of Section 150 of the Standard Specifications and the following:

This work shall consist of furnishing and placing ordinary borrow in accordance with the details shown on the contract drawings, as specified in these specifications, and as directed by the Engineer. Gravel borrow shall consist of hard durable stone and coarse sand free from loam and clay, well graded and containing no stone having any dimensions greater than two (2) inches (Type C), as per Section M1.03.0. The gravel borrow shall conform to the following requirements:

Sieve	**% Passing**
1/2"	**50-85**
#4	**40-75**
#50	**8-28**
#200	**0- 8**

The gravel borrow shall be placed in six (6") inch maximum layers and then compacted to not less than 95% of maximum optimum density as determined by AASHTO Test Designations: T99-57, Method C.

Measurement of gravel borrow shall be the number of cubic yards furnished and placed in accordance with these Specifications and as directed by the Engineer. The number of cubic yards in place and accepted shall be measured by or calculated by the Engineer. Twenty-five (25%) percent will be added to the figure for compacting. Only gravel borrow placed within the established pay limits necessary to complete the work as established by the Engineer shall be considered for payment. If, in the opinion of the Engineer, the Contractor has excavated areas to an excessive width or depth, either through error or for his own convenience, the gravel borrow used to refill the trenches beyond the reasonable depth or width, as established by the Engineer, shall be paid for by the Contractor. Failure to allow ample time for the Engineer to make the required measurements will forfeit the Contractor's right-of-claim to any gravel borrow other than that allowed by the Engineer.

Payment for gravel borrow shall be made for the number of cubic yards as determined above at the contract unit price, per Cubic Yard, for **Item 151.22: Gravel Borrow for Sidewalks**, as set forth in the proposal, which price shall be full compensation for all materials, equipment, tools, labor, backfilling, leveling and initial compaction, etc., and all else incidental thereto. Fine grading and compaction, wherever required, shall be paid for under the applicable item.

The measurement and payment provisions listed under Division 1, Section 01150 shall supplement the above payment provisions, as applicable.

FINE GRADING & COMPACTION
OF
SUB-GRADE/SUB-BASE AREAS

The Work under this Item shall conform to the relevant provisions of Section 170 of the Standard Specifications and the following:

The Work shall consist of the removal of temporary pavement and the underlying material over trenches and other areas including pavement saw cutting for specified cutbacks, excavation to sub-grade, fine grading and compaction, as required or as directed by the Engineer. The sub-grade areas shall be formed to the proposed cross-sections and compacted to the required dimensions, or as directed, in accordance with the provisions of sub-section 150.60 and 150.62.

Measurement of fine grading and compaction of the sub-grade areas (Item 170) shall be the number of square yards of area graded, shaped and compacted, as specified and as directed by the Engineer.

The additional gravel required to fill the depression or to replace the unsuitable materials removed shall be paid separately under Item 151.22.

Payment for this **Item 170: Fine Grading & Compaction of Sub-Base/Sub-Grade Areas** shall be the number of square yards, as determined above at the contract unit price, for the item as set forth in the proposal, which price shall be full compensation for all materials, equipment, tools, labor, additional excavation, if any, materials, etc. and all else incidental thereto.

The measurement and payments provisions listed under Division 1, Section 01150, shall supplement the above provisions, as applicable.

DRAINAGE STRUCTURE REMODELED
SANITARY STRUCTURE REMODELED

The work under these **Items 220.5 and 220.8** shall conform to the relevant provisions of Section 220 and the following;

The work shall consist of remodeling the cone of the structure where the line or grade requires a change greater than six (6") inches at existing sanitary and drainage structures, or where noted on the plans. For structures in the roadway itself, the excavated area will be refilled with gravel with the casting set into a concrete collar, overlain with 3-in. thick bituminous concrete top course. The Engineer shall determine the new elevation of the structure and all necessary work shall be done under his direction.

The City will assist the Contractor with the available information on the existing utility appurtenances/structures (sewer and drain manholes, catch basins, water valves, clean-outs, monitoring wells, etc.) located along the streets and sidewalks. Similar information on other utility appurtenances/structures (gas, electric, telephone, etc.) shall be obtained by the Contractor from the respective utility companies operating in the area.

The Contractor shall be fully responsible for the physical location of each of these utility appurtenances/structures already paved over or discovered during the Contractor's construction operations.

The Contractor shall not pave over any of the utility appurtenances/structures unless specifically directed otherwise, in writing, by the Engineer. Any paving over of the utility appurtenances/structures, whether willful or inadvertent, shall be subject to a fine or two hundred ($200.00) dollars for each appurtenance/structure thus buried.

If during the course of the work a defective casting is encountered, the Contractor shall remove it as directed by the Engineer. The Contractor shall install a new casting. This shall not include any damage by the Contractor, which shall be repaired or replaced by the Contractor at his expense. Existing frames and grates belonging to the City of Quincy, in good condition and not needed on the project shall be transported and carefully stacked at the DPW Yard or otherwise disposed of by the Contractor at no additional cost to the City.

Replacement castings shall not be included under this Item but shall be paid for under a separate item or provided to the Contractor from the City of Quincy stockpile. The Contractor will be required to pick up the castings at the DPW Yard.

(Continued on next page)

Any remodeled drainage or sanitary structure, regardless of existing material, shall be paid for under **Item 220.5: Drainage Structure Remodeled; or Item 220.8: Sanitary Structure Remodeled** with no additional compensation.

Payment for work under these Items shall be at the contract unit price, per Each, for the respective Items, which prices shall be full compensation for all labor, materials, and equipment necessary to complete the work, including restoration in kind of all disturbed surfaces.

Payment for temporary setting of frames and castings, as required, during the pavement construction operations, shall also be included in the unit prices, per Each, as set forth in the Bid Form.

The measurement and payment provisions listed under Division 1, Section 01150 shall supplement the above payment provisions, as applicable.

DRAINAGE STRUCTURE ADJUSTED
SANITARY STRUCTURE ADJUSTED

The work to be done under these **Items 220. and 220.7** shall conform to the relevant provisions of Section 220 of the Standard Specifications and the following:

This work shall consist of adjustments to all existing sanitary and drainage structures within the project limits, unless noted or directed otherwise. For structures in the roadway itself, the excavated area will be refilled with gravel with the casting set into a concrete collar. The new elevation of the structure shall be determined by the Engineer and all necessary work shall be done under this direction.

The City will assist the Contractor with the available information on the existing utility appurtenances/structures (sewer and drain manholes, catch basins, water valves, clean-outs, monitoring wells, etc.) located along the streets and sidewalks. Similar information on other utility appurtenances/structures (gas, electric, telephone, etc.) shall be obtained by the Contractor from the respective utility companies operating in the area.

The Contractor shall be fully responsible for the physical location of each of these utility appurtenances. This includes exposing the appurtenances/structures already paved over or discovered during the Contractor's construction operations.

The Contractor shall not pave over any of the utility appurtenances/structures unless specifically directed otherwise, in writing, by the Engineer. Any paving over of the utility appurtenances/structures, whether willful or inadvertent, shall be subject to a fine of two hundred dollars ($200.00) for each appurtenance/structure thus buried.

If during the course of the work, a defective casting is encountered, the Contractor shall remove it as directed by the Engineer. A new casting shall be installed by the Contractor. This shall not include the castings damaged by the Contractor, which shall be repaired or replaced by the Contractor at his expense.

Existing frames and grates belonging to the City, in good condition and not needed on the project, shall be transported and carefully stacked at the DPW Yard, or otherwise disposed of by the Contractor at no additional cost to the City.

Replacement castings shall not be included under these items but shall be paid for under a separate item or provided to the Contractor from the City of Quincy stockpile. The Contractor will be required to pick up the castings at the City Yard.

(Continued on next page)

Payment for work under **Item 220: Drainage Structure Adjusted and Item 220.7: Sanitary Structure Adjusted** shall be at the contract unit price, per Each, for the respective Items, which price shall be full compensation for all labor, materials, and equipment necessary to complete the work, including restoration in kind of all disturbed surfaces.

Payment for temporary settings of frames and castings, as required, during the pavement construction operations shall also be included in the unit price, per Each, as set forth in the Bid Form.

The measurement and payment provisions listed under Division 1, Section 01150 shall supplement the above provisions, as applicable.

REPLACEMENT FRAME WITH GRATE OR COVER

The work under this **Item 222** shall consist of furnishing new castings and shall conform to the relevant provisions of Section 201 and Section 220 and the following:

Payment under this Item shall including furnishing new castings for the existing sanitary/drainage structures regardless of type or size or for existing structures that are to be adjusted or changed in type or remodeled and where existing castings need to be replaced.

New castings will be paid under **Item 222: Replacement Frame with Grate or Cover**, at the contract unit price, per Each, furnished and installed in place to the satisfaction of the Engineer. This price shall be full compensation for all labor, materials, equipment and tools necessary to complete the work including restoration in kind of all disturbed/damaged areas and facilities.

Unless directed otherwise, the Massachusetts Highway Department 1977 Standard Frame and Cover will be placed on all manholes. Square Frame type Catch Basin Frame and Cover with square hole grate shall be placed on all catch basins and gutter inlets and shall conform to the details as shown on the drawings. The cost of new castings for new structures shall be paid for under their respective items.

The measurement and payment provisions listed under Division 1, Section 01150 shall supplement the above payment provisions, as applicable.

GATE BOX ADJUSTED

The work under this **Item 358.** shall conform to the relevant provisions of Section 300 of the Standard Specifications and the following:

This work shall consist of adjustments to existing curb stops, water gate and water service gate boxes to newly proposed grade changes. Gravel base around gate boxes shall be compacted. for gate boxes in the roadway itself, the excavated area will be refilled with gravel and the tops of the gate boxes shall be set in concrete collars. The new elevation of the structure shall be determined by the Engineer, and all necessary work shall be done under his direction.

The City will assist the Contractor with the available information on the existing utility appurtenances/structures (sewer and drain manholes, catch basins, water valves, clean-outs, monitoring wells, etc.) located along the streets and sidewalks. Similar information on other utility appurtenances/structures (gas, electric, telephone, etc.) shall be obtained by the Contractor from the respective utility companies operating in the area.

The Contractor shall be fully responsible for the physical location of each of these utility appurtenances. This includes exposing the appurtenances/structures already paved over or discovered during the Contractor's construction operations.

The Contractor shall not pave over any of the utility appurtenances/structures unless specifically directed otherwise, in writing, by the Engineer. Any paving over of the utility appurtenances/structures, whether willful or inadvertently, shall be subject to a fine of two hundred dollars ($200.00) for each appurtenance/structure thus buried.

If during the course of the work, a defective curb stop or gate box is encountered, the Contractor shall remove it as directed by the Engineer. A new curb stop or gate box, and/or sleeve shall be installed by the Contractor. This shall not include any gate boxes and/or sleeves damaged by the Contractor which shall be repaired or replaced at the Contractor's expense.

Payment shall be made based on the number of completed units as determined from actual count by the Engineer. Payment shall be made as determined above at the contract unit price for **Item 358: Gate Box Adjusted** as set forth in the Bid Form, which price and payment shall be full compensation for all materials, labor, and equipment necessary to complete the work as specified including restoration in kind of all disturbed areas and all else incidental thereto.

New curb stops or gate boxes shall not be included for payment under this item, but shall be paid for under a separate item or provided to the Contractor from the City stockpile. The Contractor will be required to pick up the new units at the DPW Yard.

Payment for temporary setting of gate boxes, as required, during the pavement construction operations shall also be included in the unit price, per Each, as set forth in the Bid Form. The measurement and payment provisions listed under Division 1, Section 01150 shall supplement the above payment provisions, as applicable.

SERVICE BOX

The work under this **Item 381** shall conform to the relevant provisions of Section 300 of the Standard Specifications and the following:

This work shall consist of replacement of water service gate boxes to newly proposed grade changes. Gravel base around gate boxes shall be compacted. The Engineer shall determine the new elevation of the structure, and all necessary work shall be done under his direction.

The City will assist the Contractor with the available information on the existing utility appurtenances/structures (sewer and drain manholes, catch basins, water valves, clean-outs, monitoring wells, etc.) located along the streets and sidewalks. The Contractor shall obtain similar information on other utility appurtenances/structures (gas, electric, telephone, etc.) from the respective utility companies operating in the area.

The Contractor shall be fully responsible for the physical location of each of these utility appurtenances. This includes exposing the appurtenances/structures already paved over or discovered during the Contractor's construction operations.

The Contractor shall not pave over any of the utility appurtenances/structures unless specifically directed otherwise, in writing, by the Engineer. Any paving over of the utility appurtenances/structures, whether willful or inadvertently, shall be subject to a fine of two hundred dollars ($200.00) for each appurtenance/structure thus buried.

If during the course of the work, a defective curb stop or service box is encountered, the Contractor shall remove it as directed by the Engineer. A new service box, and/or sleeve shall be installed by the Contractor. This shall not include any service boxes and/or sleeves damaged by the Contractor which shall be repaired or replaced at the Contractor's expense.

Payment shall be made based on the number of completed units as determined from actual count by the Engineer. Payment shall be made as determined above at the contract unit price for **Item 381: Service Box** as set forth in the Bid Form, which price and payment shall be full compensation for all materials, labor, and equipment necessary to complete the work as specified including restoration in kind of all disturbed areas and all else incidental thereto.

GRAVEL FOR BASE COURSE

The work under this **Item 405.** shall conform to the relevant provisions of Section 400 of the Standard Specifications and the following:

This work shall consist of furnishing, placing and compacting the gravel for base course in accordance with the details shown, as specified, or as directed by the Engineer.

The gravel shall consist of hard, durable stone material free from loam and clay, well-graded, as per Section M1.03.0 (Type B).

The gravel borrow shall be placed in three inch (3") maximum layers and then compacted to not less than ninety-five percent (95%) of maximum optimum density, as determined by AASHTO Test Designations: T99-57, Method C.

Measurement of gravel shall be the number of cubic yards furnished and placed in accordance with these Specifications and as directed by the Engineer. The number of cubic yards, in place and accepted shall be measured by or calculated by the Engineer. Only gravel placed within the established pay limits necessary to complete the work as established by the Engineer shall be considered for payment. If, in the opinion of the Engineer, the Contractor has excavated areas to an excessive width or depth, either through error or for his own convenience, the gravel used to refill the trenches beyond the reasonable depth or width, as established by the Engineer, shall be paid for by the Contractor.

Failure to allow ample time for the Engineer to make the required measurements will forfeit the Contractor's right-of-claim to any gravel other than that allowed by the Engineer.

Payment for gravel shall be made for the number of Cubic Yards, as determined above, at the contract unit price for **Item 405: Gravel for Base Course**, as set forth in the Bid Form, which price shall be full compensation for all labor, materials, equipment, tools, additional excavation, if any, backfilling, placement of materials, compaction, grading, etc., and all else incidental thereto.

The measurement and payment provisions listed under Division 1, Section 01150 shall supplement the above payment provisions, as applicable.

CLASS I BITUMINOUS CONCRETE TYPE I-1 (Base Course)

The work to be done under this **Item 420.** shall conform to the relevant provisions of Section 420 of the Standard Specifications, the work as described on the plans, and the following;

The work shall include all permanent and temporary bituminous concrete surfaces installed on the roadways, sidewalks and other areas to maintain traffic access/egress to all properties abutting any work and for the safe passage of pedestrian and vehicular traffic.

The bitumen for tack coat shall be applied over the existing cold planned or the prepared sub-base/sub-grade, or the newly installed base, or leveling courses, immediately prior to the installation of top course, as denoted on the plans or as directed by the Engineer. The surface shall be cleaned of all sand and foreign matter and dry before applying the prime coat.

Payment for the work under this item shall be at the contract unit price, per Ton, for **Item 420: Class I Bituminous Concrete Type I-1 (Base Course)**, which price shall be full compensation for all labor, materials, equipment and tools necessary for furnishing , placement, leveling, rolling and compaction of materials for the satisfactory completion of the work.

The payment for bitumen tack coat application shall be made separately under Item 463.

The measurement and payment provisions listed under Division 1, Section 1150 shall supplement the above payment provisions, where applicable.

CLASS I BITUMINOUS CONCRETE PAVEMENT TYPE I-1 (LEVELING COURSE)

CLASS I BITUMINOUS CONCRETE PAVEMENT TYPE I-1 (TOP COURSE)

BITUMEN FOR TACK/PRIME COAT

The work to be done under these **Items 460., 460.5, and 463.** shall conform to the relevant provisions of Section 460 of the Standard Specifications, the work as described on the plans and the following:

The work shall include all permanent and temporary bituminous concrete surfaces installed on the roadway, sidewalks and other areas, to maintain traffic access/egress to all properties abutting any work and for the safe passage of pedestrian and vehicular traffic.

The bitumen for prime/tack coat shall be applied at the rate of 1/10 to 1/20 gallons per square yard over the existing cold planned surface, where denoted on the plans or as directed by the Engineer. The surface shall be cleaned of all sand and foreign matter and dry before applying prime/tack coat.

Hot poured rubberized asphalt sealant shall also be applied to longitudinal and transverse joint as per the MHWY standard specification, section 460. The sealant shall be considered incidental to all class I bituminous concrete pavement of said section.

Payment for the work under these Items shall be at the contract unit price, per Ton, for **Item 460: Class I Bituminous Concrete Pavement, Type I-1, for Top Course; Item 460.5: Class I Bituminous Concrete Pavement, Type I-1 for Leveling Course;** and per Gallon for **Item 463: Bitumen for Tack/Prime Coat**, which price shall be full compensation for all labor, materials, equipment, and tools necessary for furnishing, placement, leveling, rolling and compaction of materials and spraying of bituminous emulsions and all other work incidental thereto for the satisfactory completion of the work.

The measurement and payment provisions listed under Division 1, Section 01150 shall supplement the above payment provisions, as applicable.

HOT MIX ASPHALT FOR MISC. USE

The work to be done under the **Items 472.00** when directed by the engineer shall consist of placement of bituminous concrete for patching and handwork performed on roadway surfaces that cannot be installed mechanically. This work shall conform to the relevant provisions of Section 460 on the Standard Specifications, the work as described on the plans and the following:

The work shall include all permanent and temporary bituminous concrete surfaces installed on the roadway, and other areas, to maintain traffic access/egress to all properties abutting any work and for the safe passage of pedestrian and vehicular traffic.

Payment for the work under these Items shall be at the contract unit price per ton, for which price shall be full compensation for all labor, materials, equipment, and tools necessary for furnishing, placement, leveling, rolling and compaction of materials and spraying of bituminous emulsions and all other work incidental thereto for the satisfactory completion of the work.

The measurement and payment provisions listed under Division 1, Section 01150 shall supplement the above payment provisions, as applicable.

FLEXIBLE POROUS PAVING - ITEM 473.000

PART 1 - GENERAL

1.1 SCOPE

A. This specification provides requirements for the construction of flexible porous paving.

B. In case the requirements of this specification conflict with the contract documents, this document shall govern.

1.2 DEFINITIONS

A. Exposure Condition, Moderate: Exposure to a climate where the paving will not be in a saturated condition when exposed to freezing and will not be exposed to deicing agents or other aggressive chemicals.

B. Exposure Condition, Severe: Exposure to deicing chemicals or other aggressive agents or where the paving can become saturated by continual contact with moisture or free water before freezing.

C. Base Reinforcement: The use of a geosynthetic within the aggregate base course to enhance the performance of a paving

D. Geogrid: Biaxial or triaxial woven polypropylene material for base course reinforcement and confinement, and subgrade stabilization and increased subgrade load capacity

E. Panel: An individual paving slab bordered by joints or slab edges.

F. Porous/Pervious Paving: A paving comprising material with sufficient continuous voids to allow water to pass from the surface to the underlying layers.

G. Porous/Pervious: The property of a material which permits movement of water through it under ordinary hydrostatic pressure.

H. Flexible Porous Paving: Paving system comprised of three components: recycled passenger car tires, aggregate, and urethane binder that provides a strong, pervious, yet flexible paving.

I. Subbase: A layer in a paving system between the subgrade and the base course, or between the subgrade and a flexible pervious paving.

J. Subgrade: The soil prepared and compacted to support a structure or paving system.

1.3 REFERENCED STANDARDS

A. ASTM standards:

1. ASTM C 666/C 666M-03, "Standard Test Method for Resistance of Concrete to Freezing and Thawing, Procedure A - freezing and Thawing in Water." Samples shall indicate

only minimal mass change results after 300 nominal freeze-thaw cycles, and visual examination of the test specimens shall indicate no cracks or breaks.

a. D 3385-03 Standard Test Method for Infiltration Rate of Soils in Field Using Double-Ring Infiltrometer.

b. D 3665-06 Standard Practice for Random Sampling of Construction Materials E 329-06a Specification for Agencies Engaged in Construction Inspection and/or Testing.

1.4 QUALITY ASSURANCE

A. Installer Qualifications:

1. Flexible Porous Paving installer shall be currently certified by the Manufacturer and have successfully installed a minimum of 10,000 square feet within the Mid-Atlantic region within the last year.
2. Flexible Porous Paving installer shall employ no less than two Manufacturer-certified Flexible Porous Paving technicians on staff who directly oversee or perform the installations during all Flexible Porous Paving placement, unless otherwise specified.

1.5 SUBMITTALS

A. Qualification Data

1. For Porous Paving Installer:

a. Provide a list of successfully installed Flexible Porous Paving projects, as required herein, including the address, square footage, and photographs for each project.

b. Manufacturer's Certifications.

B. Proposed Mix Design.

C. Samples for Verification: Provide one 6" diameter sample, full thickness.

1.6 PROJECT CONDITIONS

A. Traffic Control: Maintain access for pedestrian traffic as required for other construction activities.

B. Schedule placements to minimize exposure to wind and heat before curing materials are applied.

C. Avoid placing porous paving if rain, snow, or frost is forecast within 24 hours unless measures are taken as described later. Always protect fresh paving from moisture and freezing.

PART 2 - PRODUCTS

2.1 SUBBASE

A. Coarse aggregates shall meet the durability requirements of ASTM C 33.

2.2 FLEXIBLE POROUS PAVING

A. Bonding: Have the capacity to bind with: wood; steel; concrete; aluminum; compacted aggregate; enamel tile, or; fiberglass

B. Resistance to degradation: Resistant to: chlorine; ozone; bromine; muriatic acid; salt water; oil; transmission oil, and; hydraulic oil.

C. Aggregate:

1. Stone: Triple-washed coarse aggregate, No. 8 coarse aggregate (3/8 to ½ inch) per ASTM C 33. Bagged and labeled as tested and certified by Flexible Porous Paving Manufacturer.

   a. Nominal maximum aggregate size shall not exceed ⅓ of the specified paving thickness.

2. Rubber: Recycled passenger tires ground to ⅜" nominal with the wire remnants removed.

D. Binding agent: urethane liquid prepolymer based upon Diphenylmethane-Diisocyanate.

E. Air Entraining Agents: Prohibited.

F. Mix Design: Using materials acceptable to the Manufacturer design a tentative mix and test for the consistency intended for use on the work and specified.

1. The volume by weight of aggregate per cu. yd. shall be 50% of the total dry mix.
2. The volume by weight of the rubber product per cu. yd. shall be 50% of the total dry mix.
3. Permeability: Pervious infiltration rate of 2,000 gallons/square foot/hour

2.3 FORMS

A. Make forms with steel, wood, or other material that is sufficiently rigid to maintain specified tolerances, and capable of supporting concrete and mechanical concrete placing equipment.

B. Forms shall be clean and free of debris of any kind, rust, and hardened concrete.

C. Form release: Diesel, Bio-diesel or vegetable oil coating.

PART 3 - EXECUTION

3.1 SUBGRADE PREPARATION

A. Prepare subgrade as specified in the contract documents.

B. Construct subgrade to ensure that the required paving thickness is obtained in all locations.

C. Keep all traffic off of the subgrade during construction to the maximum extent practical. Regrade subgrade disturbed by delivery vehicles or other construction traffic, as needed.

D. Compact the material added to obtain final subgrade elevation.

E. Determine subgrade permeability in accordance with ASTM D3385 before porous paving placement. Confirm that subgrade permeability meets requirements of Contract Documents.

3.2 SUBBASE

A. Prepare subbase in accordance with contract documents.

3.3 SETTING FORMWORK

A. Set, align, and brace forms so that the hardened paving meets the tolerances specified herein.

B. Apply form release agent to the form face which will be in contact with porous paving, immediately before placing paving.

C. The vertical face of previously placed concrete may be used as a form.

1. Protect previously placed paving from damage.
2. Do not apply form release agent to previously placed concrete.
3. Apply liquid urethane bonding agent to face of surfaces when adhesion is desired

D. Placement width shall be as specified in Contract Documents.

3.4 BATCHING, MIXING, AND DELIVERY

A. Batch and mix on site in compliance with Manufacturer's written specifications, except that discharge shall be completed within 5 minutes of the introduction of urethane to the dry products .

3.5 PLACING AND FINISHING PAVING

A. Do not place porous paving on frozen or wet subgrade or subbase

B. Deposit porous paving either directly onto the subgrade or subbase by wheelbarrow or by material handler onto the subgrade or subbase, unless otherwise specified.

C. Deposit porous paving between the forms to an approximately uniform height.

D. Spread the porous paving using a come-along, short-handle, square-ended shovel or rake.

E. Use steel trowels to finish to the elevations and thickness specified in Contract Documents.

3.6 FINAL SURFACE TEXTURE

A. Final surface of porous paving shall be smoothed with bull float and magnesium trowels.

3.7 EDGING

A. When forms are not used, bevel the edge of the top surface to a 45° slope

3.8 CURING

A. Begin curing within 20 minutes of paving discharge, unless longer working time is accepted by the Manufacturer.

B. Completely cover the paving surface with a minimum 4 mil thick polyethylene sheet only if rain or sprinklers are imminent within 20 minutes. Cut sheeting to a minimum of a full placement width.

1. Cover all exposed edges of paving with polyethylene sheet.
2. Secure curing cover material without using dirt.

C. Cure paving for a minimum of 24 uninterrupted hours, unless otherwise specified.

3.9 HOT- AND COLD-WEATHER CONSTRUCTION

A. When hot weather is anticipated up to 95 degrees Fahrenheit, no special procedures are necessary.

B. In cold weather when temperatures may fall below freezing just after an installation, utilize a fan to maintain airflow over porous paving during the curing process.

3.10 OPENING TO TRAFFIC

A. Do not open the paving to light vehicular traffic until the porous paving has cured for at least 24 hours during warm weather, and 48 hours during very cold temperatures at or near freezing and not until the porous paving is accepted by the Owner for opening to traffic. Paving should be checked and verified to be sufficiently hardened after the curing period as relative humidity can alter the curing time in some regions.

3.11 PAYMENT

Payment for work under this item shall be at the contract unit price, per ton, for item 473.000, which price shall be full compensation for furnishing all labor, tools, equipment, materials and other incidentals necessary for the satisfactory completion of the work.

GRANITE CURB - TYPE VA-3 - STRAIGHT
GRANITE CURB - TYPE VA-3 - CURVED

The work to be done under these Items shall conform to the relevant provisions of Section 500 of the Standard Specifications, supplemented by the following:

The ends of all curbs shall be vertical and such that a flush joint is formed when two curb stones are placed adjacent to each other. Maximum joint space not to exceed 3/4 inches. The top 7-inches (exposed portion) of curb stone shall be uniform thickness and surface finish. The radii of the curved curb stone shall be as shown on drawings.

Payment for **Item 503: Granite Curb - Type VA-3 - Straight; and Item 503.1: Granite Curb - Type VA-3 - Curved** shall be at the contract unit price, per Linear Foot, complete in place and accepted by the Engineer (including the transition section), which price shall be full compensation for furnishing and installation of curbing including excavation, backfilling, saw cutting, cutting of curb pieces, curb setting, placement of dense graded crushed stone concrete bedding and pavement materials and all else incidental thereto and necessary to complete the work.

The measurement and payment provisions listed under Division 1, Section 1150 shall supplement the above payment provisions, as applicable.

GRANITE CURB CORNER

The work to be done under this Item shall conform to the relevant provisions of Section 501 of the Standard Specifications, supplemented by the following:

Payment for this **Item 517: Granite Curb Corner** shall be at the contract unit price, per Each, complete in place and accepted by the Engineer which price shall be full compensation for all labor, materials, and equipment, including excavation, backfilling, saw cutting, preparation of inlet foundation, placement of concrete bedding, and dense graded crushed stone and other materials and all else incidental thereto for the satisfactory completion of the work.

The measurement and payment provisions listed under Division 1, Section 01150 shall supplement the above payment provisions as applicable.

CURB REMOVED AND RESET
CURB INLET REMOVED AND RESET
CURB CORNER REMOVED AND RESET

The work under these Items shall conform to the relevant provisions of Section 580 of the Standard Specifications and the following:

Resetting of curbs, curb inlets and curb corners may be required at any location within the project limit. All the existing curbs, curb inlets and curb corners shall be incorporated into the work before the installation of new curb stones. The use and payment for new curb pieces will not be accepted unless agreed to in writing by the Engineer.

Payment for **Item 580: Curb Removed and Reset; Item 581: Curb Inlet Removed and Reset; and Item 583: Curb Corner Removed and Reset** shall be at the contract unit price, per Linear Foot, per Each , per Each, and per Linear Foot respectively, complete in place and accepted by the Engineer. The contract unit prices will include all labor, equipment and materials including saw cutting of the existing pavement where indicated or directed, the removal of the existing pavement, excavation, removal and resetting, all handling, cutting ends square, trimming exposed and hidden faces, cleaning all sections to be reset, gravel borrow, including grading and compacting and/or placement of concrete base, pavement materials between the reset curb and the existing or proposed pavement, and all else incidental thereto for the satisfactory completion of the work.

The measurement and payment provisions listed under Division 1, Section 01150 shall supplement the above payment provisions as applicable.

CEMENT CONCRETE SIDEWALK
CEMENT CONCRETE WHEELCHAIR RAMP
CEMENT CONCRETE AT DRIVEWAY

The work to be done under these Items shall conform to the relevant provisions of Section 700 of the Standard Specifications and the following:

Included in the work are cement concrete sidewalks, and other paved surfaces as called for in the plans, or as directed. Bounds and utility appurtenances, castings in sidewalks shall not be covered over. Sidewalk surfaces are to be graded flush with the bounds and castings. All cement concrete surfaces shall be broom finished.

The location of expansion, contraction and construction joints in the cement concrete sidewalk shall be determined by the Engineer in the field. However, such joints in straight sidewalk sections shall not exceed 25 feet. Expansion/contraction joints shall be filled with elastic filler material, as approved by the Engineer.

Wheelchair ramps are to be constructed at locations as shown or as designated by the Engineer in accordance with the latest details as per the American Disabilities Act and the Massachusetts Highway Department Standards.

The commercial driveways and all wheelchair ramps shall be reinforced with 6-in X 6-in No. 2 Reinforced Steel Bar Mesh. Approximately 3 feet length of the sidewalk on either side of the driveway shall also be reinforced with steel reinforcement bars and described above. The cost of the reinforcement shall be included under Cement Concrete Wheelchair Ramps and Driveways.

Brick feature strip shall be installed as shown on the drawings. The bricks shall be standard size, K & W Red Chamfered Repressed Pavers, or an approved equal. The bricks shall match the existing feature strip bricks in color and texture.

When forming for new or existing tree pits the ideal dimension shall be a 4' by 8' opening understanding that a minimum of 39" shall be maintained for the walking path of the sidewalk. The length of a tree pit shall not be less than 6'. Changes to tree pit opening dimensions must be approved by the Engineer.

Payment for **Item 701: Concrete Sidewalk - 1 Course; Item 701.1: Cement Concrete Sidewalk at Driveway; and Item 701.31: Cement Concrete Wheelchair Ramps**, shall be at the contract unit prices, per square yard for each of these items, completed as specified and accepted by the Engineer. These prices shall be full compensation for all labor, materials, equipment, and tools, including preparation of sub-base, grading, leveling, compaction, placement of reinforcement steel, cement concrete, joint fillers, sealants and woven wire mesh, as required, and all else incidental to the satisfactory completion of the work.

The measurement and payment provisions listed under Division 1, Section 01150 shall supplement the above payment provisions.

BITUMINOUS CONCRETE SIDEWALKS
BITUMINOUS CONCRETE WHEELCHAIR RAMPS
BITUMINOUS CONCRETE DRIVEWAYS

The work under these Items shall conform to the relevant provisions of Section 700 of the Standard Specifications and the following:

Included in the work are all residential and commercial bituminous concrete sidewalks, driveways, wheelchair ramps and other paved surfaces, as called for in the plans, or as directed by the Engineer. Bounds in sidewalks should not be covered over. Sidewalk surfaces are to be graded flush with the bounds.

Wheelchair ramps are to be constructed at locations as designated by the Engineer and in accordance with the latest Massachusetts Highway Department Standards, or as shown in the contract plans.

When forming for new or existing tree pits the ideal dimension shall be a 4' by 8' opening understanding that a minimum of 39" shall be maintained for the walking path of the sidewalk. The length of a tree pit shall not be less than 6'. Changes to tree pit opening dimensions must be approved by the Engineer.

Payment for work under each of these Items shall be at the contract unit price, per Ton, for **Item 702.1: Bituminous Concrete Sidewalks; Item 702.2: Bituminous Concrete Wheelchair Ramps; and Item 702.3: Bituminous Concrete Driveways.** This price shall be full compensation for all labor, materials, equipment and tools, including preparation of sub-base, grading, leveling, compaction, installation of the bituminous concrete base and top courses, installation of 1" overlay of bituminous concrete, and all else incidental thereto and necessary for the satisfactory completion of the work.

The gravel sub-base which is to be provided as a foundation for the above items shall be paid for under Item 151.22.

The measurement and payment provisions listed under Divisions 1, Section 01150 shall supplement the above payment provisions, as applicable.

MOBILIZATION/DEMOBILIZATION

The work to be done under this Item shall conform to the relevant provision of Section 748 of the Standard Specifications and the following:

The work under this item shall include all mobilization of men, materials, equipment and related support facilities to satisfactorily perform the job as required to meet the project construction schedules. Also included under this item shall be the demobilization of all men, materials, equipment and the related support facilities and the final site clean-up on project completion and its acceptance by the City.

Payment for **Item 748: Mobilization/Demobilization** shall be on a lump sum basis with the item amount as set forth in the Bid Form to be divided equally for mobilization (50%) and demobilization (50%). These payments shall be full compensation for all preparation work and operations, movement of men, equipment, supplies and incidentals to the project site for the establishment of full office and facilities necessary for work on this project and all other work and operations which must be performed from the time prior to the start of the work to the final acceptance of the work by the City.

The amount allocated to demobilization activities shall not be paid until the job, including restoration work, is completed, accepted and the project area is cleaned to the satisfaction of the Engineer.

Lump sum prices for all work, operations and expenses in connection with mobilization and demobilization shall not exceed five percent (5%) of the total bid amount for the entire project.

The measurement and payment provisions listed under Divsions 1, Section 01150 shall supplement the above payment provisions, as applicable.

LOAM BORROW

The work to be done under this Item shall conform to the relevant provisions of Section 751of the Standard Specifications and the following:

The work shall consist of furnishing and placing loam borrow at designated locations where plant material (grasses, bushes and trees, etc.) are to be installed. All work shall be performed in close conformity with the lines, grades and locations shown on the plans or established by the Engineer in the field.

Loam Borrow shall conform to Section M1.05.0.

Payment for **Item 751.: Loam Borrow** shall be at the contract unit price, per Cubic Yard, in place and accepted by the Engineer. This price shall be full compensation for all labor, materials, and equipment including placement/spreading and rolling/tamping of the materials, excavation and preparation of areas and locations for installation of plant materials and all other work incidental to the satisfactory completion of the work.

The above payment shall also include excavation of test pits as required, along the sidewalks or near the designated locations to insure non-interference with underground utilities.

Note: It must be noted that all seeding, loaming and landscaping of areas, not originally included in the scope of work but subsequently necessitated due to the Contractor's operations shall be considered as a part of restoration work and shall not be paid for under this item. All costs associated with the restoration work shall be included under the item of work which necessitated the restoration work.

The measurement and payment provisions listed under Division 1, Section 01150 shall supplement the above payment provisions as applicable.

SEEDING

The work to be done under this item 765 shall conform to the relevant provisions of Section 765 of the Standard Specifications and the following:

The work shall consist of seeding the approved areas in close conformity with the lines and grades shown on the plans or established by the Engineer in the field.

The materials to be used in the work (limestone, fertilizers, plant materials, water for irrigation and soil conditioners) shall conform to Section 765.40 of the Standard Specifications.

The quantities of materials, rate of application of various items and the installation details shall be as described under Section 765, as shown on the plans or as recommended by the manufacturers and suppliers.

Payment for work under **Item 765: Seeding** shall be at the contract unit price, per Square Yard, in place and accepted by the Engineer. This price shall be full compensation for all labor, materials and equipment, including seed spraying, limestone, fertilizers, fine grading, rolling the seeded areas, watering, clearing the weed and all else incidental thereto and necessary for healthy grass areas without any bare spots or areas.

TREES (item 775. and 776.)
PRINCETON ELM and JAPANESE TREE LILAC

SPECIFICATIONS

A. All trees must be nursery grown, freshly dug, balled and burlapped.

B. Tree caliper shall be determined at six (6) inches above the ground as the tree stands in its natural position.

C. Trees shall be specimen quality with single-straight trunks and symmetrical well-branched crowns that are characteristic of the variety. Trees shall not fork below five (5) feet above-ground of planting.

D. A list of planting locations will be provided in the field. Planting locations will include concrete, bituminous concrete (asphalt), tree grates and grass/loam borders. Where proposed pits are covered by cement and/or bituminous concrete, the jointing edges shall be cut vertically by a power saw or other approved method by the city. Power saws shall be capable of cutting through bituminous concrete, bituminous macadam bases courses and/or cement concrete. Tree pits shall be thirty six (36) inches by sixty (60) inches with the long side parallel with the curb.

E. All trees shall be watered at the time of planting and backfilled with loam and manually tamped to keep the trees from tipping. All newly planted trees will be puddled at least twice within 24 hours including immediately following planting. At planting, a minimum of 10 gallons of water will be used to insure no air pockets in soil around rootball. The watering truck may be filled at a designated hydrant location provided by the City. Watering under the maintenance portion of this contract shall commence within 48 hours of installation of the first tree. The Contractor shall make all arrangements to apply approximately 10 gallons of potable water to each installed tree.
Water shall be applied in a manner that does not cause erosion or damage to the water saucer. The interval of watering shall average once per week throughout the season according to weather conditions. The interval of watering may be increased, decreased or suspended at the discretion of the City. Weekly watering shall be performed on the same day each week and the Contractor shall advise the City of their watering schedule. The period from planting time through November 30th shall be considered "the season."

This seasonal period may be extended or advanced at the discretion of the City if conditions warrant.

F. Stock furnished shall be the minimum size caliper indicated. Fifty-percent (50%) of the trees shall be the minimum size caliper indicated and fifty percent (50%) of the trees shall be the maximum size caliper indicated. Stock may be larger than specified.

G. All trees shall be planted with an ArborGard+® Tree Trunk protector (or equivalent).

H. Bark mulch shall be shredded pine bark aged at least six months and not longer than two years. The mulch shall be dark brown in color, free of chunks and pieces of wood thicker than one-quarter (¼) inch. Mulch shall be free of stringy material over four inches in length, and free of chunks over three inches in width. It shall not contain an excess of fine particles.

I. Bark mulch shall be placed over entire saucer areas of individual trees to a depth of three inches after settlement not later than one week after planting. Bark mulch shall be held back from the base of all tree trunks a minimum of three (3) inches. The mulch shall be higher at the edges of the planting to hold water and moisture. No mulch shall be applied prior to the first watering of plant materials.

J. Maintenance shall consist of keeping the trees in a healthy growing condition and shall include but not be limited to watering, weeding, removal of dead material, resetting trees proper to grades or upright position, and maintaining planting saucer. Any decline in the condition of trees during the maintenance period shall require the Contractor to take immediate action to identify potential problems and undertake corrective measures. If required, Contractor shall engage professional Arborists and Horticulturalists to inspect plant materials and to identify problems and recommend corrective procedures. The City shall be immediately advised of such actions. Inspection and recommendation reports shall be submitted to the City.

K. The Contractor shall notify Dig Safe 72 hours in advance of work at 1-888-DIG-SAFE (344-7233). The Contractor shall follow all Dig Safe rules and regulations. The Dig Safe rules and regulations can be found on the Dig Safe website: www.digsafe.com Dig Safe numbers must be provided to the City for each location.

L. The Contractor shall be responsible for arranging police details when necessary and will incur the cost thereof.

M. Prior to commencing any work under this contract, the Contractor shall submit to the City in writing for approval, a Schedule of Work. The Schedule of Work shall indicate the following:

1. specific dates when tree selection and tagging will occur
2. when sidewalks are to be opened
3. when trees are to be planted
4. estimated time of completion
5. watering schedule

The City reserves the right to expand or modify the schedule during the planting period to meet prevailing conditions. All modifications to the schedule must be approved in writing only, with a copy to the Contractor, and a copy to the City. A five-day written notice shall be given to the City requesting a representative to select and tag trees.

N. The Contractor shall be responsible for the preservation of all public and private property, and shall use every precaution necessary to prevent damage thereto. If any direct or indirect damage is done to public or private property by or on account of any act, omission, neglect, or misconduct in the execution of the work on the part of the Contractor, the property shall be restored to the condition equal to that existing before the damage was done, at the Contractor's expense. Contractor shall immediately notify the City verbally and in writing of any damage caused to public or private property.

O. If the Contractor chooses to stake trees when planting, all stakes must be removed by the Contractor at the end of the warranty period.

IV. ACCEPTANCE

Trees shall be accepted provided all requirements have been complied with and trees are alive and in a healthy, vigorous condition. Final inspection of trees will be made at completion of planting.

V. WARRANTY

A. Contractor hereby warrants that all trees will remain alive and in healthy, vigorous condition for a period of one (1) year after completion and acceptance of the entire project. Trees that die during the warranty period shall be removed immediately and replaced by the Contractor during the next planting season or as directed by the City.

B. Warranty shall not include damage or loss of trees after planting caused by; fires, floods, winds in excess of seventy (70) miles per hour, and acts of vandalism.

Tree Planting Specifications

I. DESCRIPTION

The general scope of work shall consist of the furnishing and planting of two hundred (200) new trees of varying species and related work at the locations specified of which approximately three-fourths (¾) are grass borders or tree grates with the remaining locations being concrete and bituminous concrete. In addition, the following related items shall be included in the scope of work: cutting and excavation of tree pits; the watering and maintaining of the trees; preparation of planting soil mix and fertilizer additions; provision of soil additives required to adjust for pH requirements of specific trees; installation of bark mulch; and fine grading of planted areas.

II. MINIMUM CRITERIA

1. Installation and planting operations shall be conducted by an on-site certified Arborist, who holds at least one (1) of the following licenses: Massachusetts Certified Arborist (MCA); and/or Massachusetts Certified Horticulturist (MCH); and/or an International Society of Arboriculture Certified Arborist (ISAC); with at least ten years experience in the field of municipal tree planting.

2. All bidders must have access to a water truck with a minimum capacity of 500 gallons.

3. The City of Quincy reserves the right to reject any and all bids that do not satisfy the two aforementioned items.

III. SPECIES, SIZE AND QUANTITY

Princeton Elm (item # 775.)	**2½-3" caliper**	**Quantity: 24**
Japanese Tree Lilac (item #776.)	**2½-3" caliper**	**Quantity: 24**

Note: *Substitutions for species will be considered by the City only if the Contractor can display beyond a reasonable doubt that all possibilities have been exhausted. Alternate species must be pre-approved by the City.*

ITEM 804.3 3-INCH ELECTRICAL CONDUIT, TYPE NM - PLASTIC (UL) FOOT

The work to be done under this item shall conform to the relevant provisions of Section 801 and the following:

All conduit shown on plans, or additional conduits placed in locations as directed by the Engineer, shall be new 3 inch electrical conduit Type NM. The conduit material shall be Schedule 40 polyvinyl chloride (PVC) plastic conduit.

In locations where a trench has been cut in a roadway to be cold planed and resurfaced, the existing pavement shall be cut to neat true lines by mechanical means along the length of the trench equally spaced from the centerline of trench and not more than 18 inches apart for a single conduit installation. Conduit shall be placed and backfilled with control density fill (Type 2E) conforming to the requirements of section M4.08.0 of the Standard Specifications. In all other locations, conduit trenches shall be filled with gravel in accordance with Standard specifications.

Measurement shall be as specified in Section 801.80 of Standard Specifications, except as noted below. For Electrical Conduits backfilled with control density fill the Unit cost shall be the same as conduit backfilled with gravel. Any Double Conduit shall be measured for payment by the run of Double Conduit installed times a factor of 1.5.

Also included in the cost of these Items shall be full compensation for any bends, sweeps, mounting hardware, staging, lifts or hoists, removing and reinstalling existing fencing, drilling in concrete, all labor, equipment, tools, and other incidentals necessary to complete the work items.

Payment for this Item shall be at the Contract unit price bid per linear foot, which price shall be full compensation for furnishing and installing conduit, yellow warning tape, excavation, bedding, gravel borrow, and pull wires.

Payment for this Item, per linear foot shall also be full compensation for excavation, conduit installation, connection to manholes, handholes, etc., gravel, Control Density Fill where applicable, backfill and compaction and restoration in kind of all disturbed/damaged surfaces and all else incidental thereto for which separate payment has not been provided for elsewhere.

ITEM 811.31 **HANDHOLE (12" X 12")** **PER EACH**

The work to be performed under these provisions shall conform to the relevant provisions of Section 800 of the Standard Specifications, the relevant provisions of the NEES/Mass Electric Company (MECo) standards and details, included in the Appendices, and the following:

The work shall include the furnishing and installation of handholes with frames and covers, as shown on the drawings or as directed by the Engineer. Materials and methods shall comply with Section 801.40 and 801.61 of the Standard Specifications, with the exception of excavation. All or any excavation relative to this work shall be included as part of this item. Units shall be pre-cast concrete, as shown on Standard Drawing SC2.031.

The installation of handholes in accordance with the contract drawings and the MHD Standard Drawings for Traffic Signals and Highway Lighting. However, the covers shall be modified from the standard and the legends shall read follows: **LIGHTING** on the handholes for Lightings; **TRAFFIC** on the handholes used for traffic interconnect and traffic signals.

Payment for work under **Item 811.31: Handhole 12" X 12":** shall be at the contract unit price, Per Each, installed and accepted by the Engineer. This price shall be full compensation for all labor, materials, and equipment necessary to complete the work, including excavation, preparation of foundations, cement concrete, formwork, handholes with frames, covers and appropriate legends, conduit connections, backfilling, compaction of materials, placement of gravel and concrete where required and other pavement materials and all else incidental thereto for which separate payment has not been provided for elsewhere.

ITEM 815.01 TRAFFIC CONTROL SIGNAL LOCATION 1 LUMP SUM

Location 1 is the intersection of Adams Street at Beal Street and Stedman Street.

Scope:

The work to be done related to traffic signal installation consists of the installation of new traffic signals at the location listed above, complete with vehicle detectors, emergency preemption, signal posts and foundations, signal heads, a cabinet foundation, wire and cable, an electrical service connection on a telephone pole and all other equipment, materials and incidental costs necessary to furnish, install and program a complete and functioning traffic control system as specified and as shown in the contract documents and existing signal equipment shall be removed and stacked as directed by the engineer.

All work under these items shall conform to the relevant provisions of Section 800 of the Massachusetts Standard Specification, the 2009 Manual on Uniform Traffic Control Devices (MUTCD) as amended, and the following technical provisions:

General Requirements

A list of the major traffic signal items required is included on the Plans. Each component supplied shall be compliant with applicable federal and state laws as they apply to NTCIP.

Within 10 days following execution of the Contract, the Contractor shall submit shop drawings for signal supports, a list of equipment, and manufacturer's equipment specifications to the Engineer. Approval of these drawings shall be general in character and shall not relieve the Contractor from the responsibility of or the necessity of, furnishing materials and workmanship conforming to the plans and specifications. No work shall be commenced by the Contractor until approval of the shop drawings and the manufacturer's data has been received in writing from the Engineer. The Contractor shall deliver to the Engineer a Certificate of Compliance with the manufacturer for all materials purchased from the manufacturer.

The Contractor shall deliver to the Engineer a certificate of compliance with the manufacturer for all materials purchased from the manufacturer.

Any Electrical Contractor performing work on roadways or signals under the jurisdiction of the City of Quincy must be on the MassDOT Approved Contractor List and also be certified by the International Municipal Signal Association (IMSA) for Traffic Signal Electrician Level II or Level III.

The Contractor's attention is directed to a rule of the Board of State Examiners of Electricians which states that the installation of wiring in ducts by Contractors in construction of State Highways will not be permitted unless installed by licensed electricians. The installation of the duct work can be installed by skilled laborers. All electrical work performed in association with the traffic signals and roadway improvements, weather on State, Municipal, County or Private property, on this Contract shall be by licensed electricians holding a "Certificate B". Additionally,

the foreman shall be a certified as an International Municipal Signal Association (IMSA) Traffic Signal Technician, Level I at minimum.

SERVICE CONNECTION

As soon as Notice to Proceed with construction is given, the electrical contractor shall submit a request to the servicing utility companies for electrical service and a phone drop on behalf of the City of Quincy. This request shall be coordinated with the Department of Public Works and IT Department.

The work shall include the installation of proposed service connection as directed on the plans. The work involved shall include the installation of service toward a new disconnect switch on a utility pole. New conductors and grounding cable shall be supplied and installed between the power source junction and the new control cabinet.

Service connections shown on the plan are approximate only. The Contractor shall determine exact locations from the servicing utility engineer and arrange to complete the service connections, and remove the existing service and be responsible for all charges incidental thereto.

A 100-ampre meter socket approved by the utility company shall be furnished and installed on the side of the control cabinet by the servicing utility company.

A 3-inch PVC conduit shall be installed from the controller cabinet to the utility pole and/or electric manhole, which will supply electrical service to the controller cabinet. This conduit shall be encased in concrete where crossing roadways and driveways.

Flashing Operations

Flashing operations and transition requirements shall be in accordance with Section 4D.28 thru 4D.31 of the MUTCD and shall be as shown on the plans.

Traffic Signal Equipment

The traffic signal controller unit (CU), malfunction management unit (MMU), detector amplifiers, and all other ancillary traffic signal control components included in the traffic control cabinet shall comply with the latest version of the National Electrical Manufacturers Association (NEMA) Standard No. TS2, Traffic Controller Assemblies with National Transportation Communications for ITS Protocol (NTCIP) Requirements.

Traffic Signal Controller

The controller unit shall be a keyboard-entry menu-driven unit conforming to the Standard Specifications, with internal time base coordination, emergency preemption, and programmatic capability. The controller shall be complete with a module, including modem card and physical connector, to support closed loop communication.

Controllers shall conform to Section 3, Controller Units of NEMA No. TS 2, Traffic Controller Assemblies. The controller unit shall meet all applicable requirements of the NEMA Standard Publication No. TS 2 Type 1 and the Department's 1988 Standard Specifications. Controllers shall utilize an input/output interface conforming to Section 3.3.1 of the NEMA TS 2 Standard for all input/output functions with the backpanel terminals and facilities, the malfunction management unit, detector rack assemblies and auxiliary devices. Controller unit shall be manufactured by Eagle Traffic Control Systems Co. model EPAC 3000 series (M50).

The controller unit shall include internal time of day, day of week, week of month programming and be programmed with the latest daylight savings time adjustments. Daylight Savings Time begins at 2:a.m. on the second Sunday in March and reverts to standard time on the first Sunday in November.

Remote Monitoring

Each controller shall be equipped with a NEMA compliant modem such as a United Signal Controller's Hummer, GDI, or approved equal shall be supplied for communication between each location and any office monitoring station. This specification shall include provisions for the on street modem as well as any necessary software and /or hardware necessary to monitor the system from remote locations (the City and Design Engineer).

A telephone line shall be provided to connect the controller with the MARC closed-loop advanced traffic signal system maintained and operated by the Traffic Division of the Quincy Department of Public Works. The contractor shall furnish the City and Design Engineer the manufacturer's software and software manual (latest version of both) to enable the communication between the controller and the computer, including the manufacturer's database management software used to facilitate uploading and downloading of timing and other variable parameters between the two devices and from the laptop to a printer for hard copy output. Contractor shall also provide up to eight-hours of hands-on training of the software by the manufacturer to the City and Design Engineer.

Bus Interface Unit

The Bus Interface Unit (BIU) shall comply with Section 8 of the NEMA TS 2 Standard. The BIU shall be fully interchangeable with any other manufacturer's Unit and interchangeable in a NEMA TS 2 Type 1 cabinet assembly.

The BIU shall perform the interface function between Port 1 at the controller unit, the malfunction management unit, loop detector rack assembly, and the backpanel terminal and facilities.

As a minimum two (2) LED indicators shall be provided on the BIU front panel. One indicator shall serve a dual use: as a power on indication and as a diagnostic indicator for proper operation of the device. The second indicator shall serve as a

transmit indicator illuminating each time data is transmitted.

Malfunction Management Unit

The malfunction management units (MMU) shall comply with Section 4 of the NEMA TS 2 Standard. The MMU shall be capable of operating as either a Type 16 with 16 channels (8 vehicle, 4 pedestrian, 4 overlap) or a Type 12 with 12 channels (8 vehicle, 4 overlap). The MMU's supplied shall be configured to operate as Type 16 units.

The MMU's in either the Type 16 or Type 12 configuration shall be capable of operating in a NEMA TS 2 Type 2 cabinet, a NEMA TS 2 Type 1 cabinet or a NEMA TS 1 cabinet without loss of functionality. The MMU shall be connected directly to the controller unit to support enhanced MMU monitoring of controller Operations.

Testing of Grounding System

The Contractor shall perform testing of the equipment grounding system in the presence of the Engineer in accordance with the Standard Specifications.

Vehicle Loop Detectors and Amplifiers

The loop detector amplifiers shall be supplied as two-channel rack mounted units with programmable delay and extension timing, however, all delay and extension programming shall be completed internally in the controller unit.

A chart shall be permanently affixed to the controller cabinet door, which labels each amplifier channel. The chart shall indicate the detector number, street, approach direction, lane assignment, corresponding phase and terminal number for each amplifier channel.

The detector lead-in cables shall also be similarly labeled, both in the controller cabinet and in the pull box containing the detector lead-in splice. This labeling and attachment shall be of durable materials such as brass or plastic, attached by wire or plastic ties. Adhesive attachment of the label shall not be acceptable.

The control cabinet shall be supplied with a minimum of four, two-channel rack mounted loop amplifiers unless otherwise noted in the major items list on the plan sheets. Additional rack mounted loop amplifiers shall be supplied if so required by the major items list on the plans.

Wire loop detectors shall be installed in the top pavement course of Adams Street, Beale Street, and Stedman Street for vehicle detection. In advance of the loop detector installation, the Contractor shall mark, on site, the loop detectors with any changes required by field conditions such as manholes. The loop detector layout shall be inspected and approved by the Engineer before the loop detectors are installed. Splicing insulator shall be an approved re-enterable rigid

body spices kit with non-hardening sealing compound compatible with the wire insulation

Loop Wire - shall be composed of a #14 AWG, 19-strand conductor insulated by a polyvinyl chloride compound.

Loop wire shall be loosely encased in a protected plastic tubing of PVC or polyethylene plastic, IMSA 51-5, ¼ inch outside diameter, and the wire may have cross-linked polyethylene insulation or it may have THHN/THWN insulation.

Shielded Lead-In Cable - shall be #14 AWG, stranded copper twisted pair wire, 100% shield jacketed (MHD - M8.16.11) or a manufacturers recommended lead-in cable to allow two independent channel operations in a single cable.

Splice and Connections - shall be made with approved connectors or terminals applied with a crimping tool (MHD 813.60, 815.64).

Soldering - all wire loop sensor/shielded lead-in splices and connections shall be soldered using 60% tin/40% lead rosin-core solder meeting the requirements of Federal Specification QQ-571D (MHD 813.64).

Splicing Insulator - shall be an approved re-enterable rigid body splice kit with a non-hardening sealing compound compatible with the wire loop insulation.

Sawcut Sealant - any approved thixotropic or two (2) component polyester system. applied by nozzle inserted directly into the saw-cut slot.

PVC Schedule 80 - (liquid tight) - shall be accordance with M5.07.7.

INSTALLATION REQUIREMENTS

Before any saw-cutting is performed, all material, equipment and personnel shall be at the site. Barricades, warning signs must be deployed to protect the workers and the traveling public as required.

The locations of each loop shall be marked on the pavement, using the approved scale drawing, and approved by the Engineer.

A power saw equipped with a diamond blade shall be used to cut a slot in the pavement. The saw must be equipped with a depth gauge and horizontal guide to assure proper depth and alignment of the slot.

The diamond blades to be utilized for the saw-cut shall provide a clean, well-defined 5/16 inch wide saw cut without damage to adjacent areas. The saw cut depth shall be at least two (2) inches. A 1-1/4 inch diameter drilled hole shall be at each intersection of saw cuts to prevent sharp bends in the loop wire. All cuts, including the drilled holes where wire is to be installed, shall be of the same depth.

Filtered compressed air shall be used to remove all dust and moisture from the 5/15 inch slot. Sand or other moisture absorbing materials shall not be used in the slot. If this slot is damp, do not proceed with the installation until the slot is dry.

The loop sensor wire must be installed, without damage to the wire or its insulations, starting at the pull box around the loop for the specified turns and then back to the pull box. The sensor wire shall be laid in the slot so that there are no kinks or curls and no stretching of the insulation, and shall be installed as far down in the slot as applicable. A blunt object, similar to a wooden paint stirrer, should be used to seat the loop sensor wire. In no case shall be screwdriver or other sharp tool be used for this purpose. The pair of loop sensor wires between the edge of loop and the splice in the shielded lead-in cable in the pull box shall be twisted together to provide at least five (5) turns per foot.

The heat source for soldering shall be electrical, not exceeding 30W capacity.

A 3/4-inch PVC Schedule 80 conduit, with an approved insulation, bushing at each end, shall be installed between the edge of pavement and the pull box to house the loop sensor wires [twisted pair(s)]. This conduit shall slope toward the pull box to permit water to drain into the pull box.

SPLICE AND CONNECTIONS

In the pull box nearest the roadway loop sensor each lead and lead-in conductor shall be stripped back and spliced using a pressure type wire conductor applied with a crimping tool, together with multiple loop sensor wires as required for the particular installation. Multiple loop sensor wires shall be identified (color tape or fiber tags) at each location where more than one (1) loop sensor occupies a pull box. The lead-in splice shall be soldered and insulated, the insulation materials shall be heat-shrinkable polyolefin. The shielded lead-in cable outer jacket and shield shall be stripped back sufficiently to ensure entire area shall be leveled using electrical insulating putty and then covered with a thick wall, interior sealant coated, heat shrinkable tubing. The tubing shall extend at least two (2) inches beyond splices in both directions before shrinking the tubing.

The tubing shall be shrunk with a heat source, designed for the purpose of delivering at least 250 degrees F (121 Degrees C) until the tubing sealant protrudes out both ends and is apparent completely surrounding both the lead-in cable and the loop sensor ends.

The lead-in conductor shall be connected to the appropriate terminals in the controller cabinet, by using crimped and soldered terminal ends.

TESTING OF LOOPS

The following test procedures shall be performed in the presence of the Engineer before and after loop sensor is sealed in the pavement as detailed below. The cost of equipment, labor and materials to perform such testing and similar re-testing following repairs, replacement, or adjustment of any detectors within the project area shall be included in the price bid for the Traffic Control Signal Installation for that location.

After installation of wire loop sensors in the roadway and installation of shielded lead-in connecting the loop sensors to the controller cabinet, each loop sensor and lead-in combination shall be tested (at the controller cabinet) for loop installation. The resistance from lead to lead of the same loop shall not exceed three (3) ohm per one thousand (1,000) feet as measured by a high quality meter suitable for measurement of low resistance.

A megohm meter test at 500 volts D.C. shall be made between the two leads of a loop/lead-in combination temporarily spliced together, but otherwise disconnected from all terminals, and the shield drain wire and then the earth ground connection. These resistances should be at least on hundred (100) megohms under worst case conditions.

A megohm meter test at 500 volts D.C. shall be made between lead-in shield and the earth ground rod. This resistance should be at least one hundred (100) megohms under worst case conditions.

If any loop sensor and lead-in combination fails to pass an y one of the four tests, it shall be repaired and then retested on two occasions at least two weeks apart, and then shall pass on each re-test occasion. If the loop sensor lead-in combination does not pass all these re-tests, a new loop sensor and/or lead-in shall be installed and shall pass these tests, at no additional cost.

After the above tests have been satisfactorily completed, all loop sensor/shields lead-in inductances shall be measured and a written report of the results shall be filed with the Engineer and a copy stored with the "box prints" at the intersection along with a copy of the ground electrode, resistance tests required by the MassDOT 813.62B.

Attention is directed to paragraph 815.64 of the 1973 Standard Specifications, sections of which apply to these specifications.

DIAGRAMS AND MANUALS

Wiring and schematic diagrams, descriptive parts, lists, and instructions and maintenance manuals shall be provided for all items furnished under these specifications. Tables, charts or data for use in designing loops of various sizes and configurations, other than specified below, shall be provided. Ten (1) complete sets of diagrams, manuals and pertinent information shall be furnished with each contract.

SEALING OF WIRE LOOP SENSORS IN PAVEMENT

With special non-metallic nozzle, insert nozzle into saw-cut down to level wires and extrude sealant while moving the applicator and nozzle smoothly along the length of the loop wire. Fill to a level 1/8-inch below the surface.

When using solvents for clean-up, it is essential that proper precautions for handling such material be observed.

Attention is directed to paragraph 815.64 of the 1973 Standard Specifications, sections of which apply to these specifications.

Vehicle Loop Detector Splice and Connection

Splicing and connection shall be made in the pull box nearest the roadway loop sensor but not exceeding four loops per pull box. All loops included in a detector group as shown on the plans shall be spliced in a single pull box. Each lead and lead-inconnector shall be stripped back and spliced using a pressure type wire connector applied with a crimping tool. Multiple loop sensors shall be identified as detailed on the plans.

Lead-in splicing shall be staggered to prevent contact with each other. Each crimped splice shall be soldered and insulated. The insulation material shall be heat-shrinked polyolefin. The shielded lead-in cable outer jacket and shield shall be stripped back sufficiently to ensure that the shield cannot come into contact with the spliced conductors. Follow the instructions of the kit manufacturer for this procedure when installing the re-enterable splice kit.

> *NOTE WELL: The above splice shall be done on the day of the loop wire installation to prevent the entrance of any moisture into the plastic tubing.*

The lead-in conductors shall be connected to the appropriate terminals in the controller cabinet, by using crimped or soldered terminal ends. The heat source for soldering shall be electrical not exceeding 30W capacity.

Vehicle Loop Detector Testing

The following test procedure shall be performed in the presence of the Engineer, the Design Engineer and a representative from the Town of Sutton Fire Alarm Division before and after the loop sensor is scaled in the pavement as detailed below. The cost Of equipment, labor, and materials to perform such testing and similar re-testing following repairs, replacement, or adjustment of any detector within the project area shall be included in the contract unit price for this item.

After installation of wire loop sensors in the roadway and installation of shielded lead-in connecting the loop sensors to the controller cabinet, each loop sensor and lead-in combination shall be tested (at the controller cabinet) for proper installation. The resistance from lead to lead of the same loop shall not exceed three (3) ohms per one thousand (1000) feet as measured by a high quality meter suitable for measurements of low resistance in the range of 1 to 6 ohms.

A megohm meter test at 500 volts DC shall be made between the two leads of a loop/lead-in combination temporarily spliced together, but otherwise disconnected

from all terminals, and the shield drain wire and the earth ground connection. These resistances shall be at least one hundred (100) megohms.

A megohm meter test at 500 volts DC shall be made between lead-in shield and the earth ground rod. This resistance shall be at least one hundred (100) megohms.

Load Switch

Load switches shall comply with Subsection 6.2 of the NEMA TS 2 Standard. All load switches shall utilize optically isolated encapsulated modular solid-state relays. Discrete components on circuit boards are not acceptable.

Load switch indicator lights shall be LED-type and wired on the input side of the device.

Note: The controller cabinet assembly shall be initially supplied with a full complement of load switches to accommodate each available position of the backpanel.

Flashers

Flashers shall comply with Subsection 6.3.3 of the NEMA TS 2 Standard and be equipped with two output indicator lights which will show flashing power out to the cabinet assembly.

Flash Transfer Relays

Flash transfer relays shall comply with Subsection 6.4 of the NEMA TS 2 Standard.

The field electrical loading for flash operation shall be wired through the transfer relays such that the load on the 2-circuit flasher is as balanced as possible within the limitations of the signal phasing.

Note: The controller cabinet assembly shall be initially supplied with a full complement of flash transfer relays to accommodate each available position of the backpanel.

Traffic Controller Cabinet

The controller cabinet shall conform to the NEMA TS 2 Type 1 Standards, Section 7.

Cabinet size shall be as indicated on the plans and as follows;

- Cabinet Type: 6
- Cabinet Size: 56″x44″x28″
- Back Panel: 12-Position
- Mounting: Grounded
- MMU: 16 channel

The control cabinet shall be made of aluminum.

Note: The control cabinet shall be initially wired with a "D" harness. All wires for this harness shall be properly terminated on the backpanel.

The cabinet shall also be wired with a normally closed switch connected to a user defined input to the controller for remote monitoring of the control cabinets' door open status. The controller cabinet shall also be supplied with a Manual Police Button to manually control the operations of the traffic signal via the Police Door Access Panel.

Controller cabinet foundations shall not obstruct a sidewalk or crosswalk so that passage by physically challenged persons is impaired.

The following requirements are designed for effective use of a laptop computer in conjunction with traffic signal controllers. These requirements are also designed to permit all engineers, electricians and technicians (including those who are disabled but ambulatory) to work in the cabinet in a safe, effective and comfortable manner. To this extent, the following meets applicable ADA requirements.

A. Adjust the control cabinet height by use of a cabinet extender, adjust the placement of cabinet shelves, adjust the height of the cabinet foundation or provide any combination of these three items so that the top of the LCD or other visual display window of both the local controller and the master controller is no more than 48" above finished grade in front of the cabinet. The top of the cabinet door opening shall be at least 5′8″ above finished grade. Any technical provision, plan detail, standard specification or standard drawing to the contrary shall not apply to the extent that it may conflict with this viewing height requirement.

B. Furnish and install one slide-out/slide-in shelf or swing-out/swing-in shelf appropriate for the size and load of a laptop computer. This moveable shelf shall support the bottom of the laptop computer at a height between 3′-4″and 3′-8″ above finished grade in front of the cabinet.

C. Furnish and install a paved pad in front of the control cabinet. This pad may be of hot mix asphalt or cement concrete, built in accordance with the sidewalk Specification applicable to this project approximately level, approximately 1″ above the surrounding unpaved surface, or at even grade with the adjacent surface if paved. This pad shall abut the front of the cabinet: project at least 1′ to each side of the cabinet and at least 3′ in front. No pad is required if the front of the cabinet immediately abuts an existing or proposed paved sidewalk or other paved surface.

D. Both the firmware and software version in each timer unit shall be the same throughout the project, and shall be the latest version available on the market. In addition, the contractor shall promptly furnish to the owner and install all upgraded versions of both firmware and software through the last day of the inspection period, guarantee period or warranty period, whichever date is later.

E. The contractor shall furnish one cable with each new timer unit to connect a controller timing mechanism to a laptop computer. This cable shall have a termination at one end to match the controller. It shall have a termination on the other end to match the type of serial port found on laptop computers, usually DB9. This cable shall be wired to provide serial RS232C communication between the controller and the computer.

F. Payment for the work described above shall be deemed to be incidental to and included under Item 815.01.

Testing of Ground System

The Contractor shall perform testing of the equipment grounding system in the presence of the Engineer in accordance with the Standard Specifications.

Emergency Vehicle Preemption

The emergency vehicle preemption system shall be installed in the same cabinet as the controller. The make and model of the preemption system for this project shall meet the approval of the Town of Sutton.

(Note: The cable for the preemption system shall be separate from the cable associated with the traffic signal system).

The emergency vehicle preemption control system shall consist of a data-encoded phase

selector to be installed within the traffic control cabinet. This unit will serve to validate, identify, classify and record the signal from the optical detectors located on support structures at the intersection. Upon receiving a valid signal from the detector, the phase selector shall generate a preempt call to the controller initiating a preemption operation as shown on the plans. Once preemption has cleared, normal operation shall start up in the main line green phase (typically phase 2 & 6).

The phase selector shall be a rack-mounted plug-in two or four channel, dual priority device. The phase selector shall plug into a shelf-mounted single card slot chassis. Programming the phase selector shall be via a PC-based computer utilizing unit specific software. One copy of software, on Compact Disc shall be supplied and licensed to the Town of Sutton. A hard copy of final programming data shall be left in the control cabinet. The CONTRACTOR shall supply a complete set of interface cables for phase selector to laptop connection.

The CONTRACTOR shall install a confirmation strobe at the traffic signal location as shown on the plans. The confirmation strobe shall serve to validate to the driver of the emergency vehicle that the traffic signal has recognized the preemption call and will initiate the proper preemption sequence. The confirmation strobe shall have a clear/white lens.

The CONTRACTOR shall be responsible for the proper programming of the phase selector, and all other work necessary to provide a complete and operating emergency vehicle preemption system.

Post and Base

Signal posts and bases shall be steel shafts with octagonal bases painted black.

Signal base foundations shall not obstruct a sidewalk or crosswalk so that passage by physically challenged persons is impaired. If any base foundations are in the sidewalks, they shall be installed so that they are flush with the finish grade.

Signal post foundations shall be precast concrete foundations.

Where soil conditions are such that, in the opinion of the Engineer, the typical foundation design is not suitable, the Engineer shall provide modified design for the foundation.

Foundations for Signal Post, and Controller Cabinets foundations shall be constructed using 4000 psi, ¾ inch, 610 Cement Concrete Masonry conforming to the relevant provisions of Section M4 of the Standard Specifications and the following:

A. Reinforcing steel shall meet the requirements of Section 800 and the material section of the Standard Specifications.

B. The top forming of cast-in-place units shall extend downward for a minimum

of 24 inches on the side of any foundation. The lower portions of all foundations shall be placed directly against undisturbed earth. No forms or reinforcing for foundations for mast arm poles, span wire poles and control cabinets shall be set nor shall concrete be placed until the excavation has been inspected by the Engineer and his approval to proceed has been given.

C. The top of the cast-in-place units and precast units shall extend no more than ½" (one-half inch) above the finish grade.

Mast Arm Poles and Foundations

Mast arm poles and foundations shall be fabricated and constructed in conformance with the MassDOT Standard Drawings included in the plans.

All mast arm poles shall be Type II galvanized monolevers with shoe bases, unless otherwise directed. Acceptance of Type II mast arm poles shall be contingent upon review and approval of the shop drawings submitted by the Contractor. Longhand design calculations shall be submitted for all Type II mast arms.

Based on the soil bearing logs provided in the Contract Documents and the Standard Drawings cited above, the Contractor shall select the appropriate foundation design for each mast arm and submit to the Engineer for approval.

Where soil conditions are such that, in the opinion of the Engineer, the typical foundation design is not suitable, the Engineer shall provide a modified design for the foundation stamped by a Massachusetts Professional Engineer.

Cement Concrete Foundations

Foundations for Signal Posts, Mast arm poles, and the Controller Cabinet shall be constructed using 4000 psi , ¾ inch, 565 Cement Concrete Masonry conforming to the relevant provisions of Section M4 of the Standard Specifications and the following:

1. Reinforcing steel shall be ASTM A-615, Grade 60

2. The top forming of cast-in-place units shall extend downward for a minimum of 24" on the side of any foundation. No forms or reinforcing for foundations for mast arms and the control cabinet shall be set nor shall concrete be placed until excavation has been expected by the Engineer and his approval to proceed has been given.

Foundations shall not obstruct a sidewalk or crosswalk to that the passage by physically challenged persons is impaired.

Signal Head

Signal heads shall be rigid mounted on mast arms eith the bottom of all signals at the same height. All traffic signal lenses shall be 12″ in diameter unless otherwise noted on the plans. Louvered back plates shall be 5″ provided on all overhead signal heads as noted on the plans. All signal heads shall be equipped with light emitting Diode (L.E.D.) 12″ modules as noted on the plans. Signal heads shall be made of aluminum. Signal heads shall be installed with cut tunnel visors unless otherwise noted on the plan.

Red, Yellow, and Green LED Vehicle Signal Modules

All LED signal modules shall be an approved item from MassDOT's Traffic Control Devices Approved Equipment List located at http://www.massdot.state.ma.us/Highway/ via the following web pages "Doing Business with Us", "Qualified Construction Materials List", and "Traffic Signal Controls".

If the LED modual conforms to the latest ITE performance specifications and is Energy Star compliant, it may be submitted for approval to be placed on the Traffic Control Devices Approved Equipment List . See the above PDF documentation for instructions.

To prevent the LED module warranty from being voided, the connecting leads on the module shall not be cut. The original LED module leads shall be connected to the signal head terminal block as continuous wire without splices.

The LED signal module will be replaced or repaired by the manufacturer if it exhibit's one of the following:

- A failure due to workmanship or material defects within the first 60 months of field operation.

- A greater than 40 percent light output degradation or a fall below the minimum intensity levels (as defined by the latest ITE performance specifications) within the first 36 months of field operation.

Pedestrian Heads

Pedestrian head indications shall be illuminated LED type displaying the graphical symbols of a walking person and/or upraised hand and a pedestrian countdown. All LED indications on the pedestrian signal shall have an automatic dimming circuit for night illumination to reduce long-term degradation to the LEDs. Pedestrian heads shall be made of aluminum and painted per Section 815.60 of the Standard Specifications for Highways and Bridges.

Each visual pedestrian indication shall be complemented by a time display indication. Each time

display indication shall be self-programming and micro processor based, with LEDs used in the display. The time display will countdown the amount of time remaining in each walk and flashing don't walk time interval for viewing by the ambulatory public. The time display pedestrian indication shall meet or exceed the specifications of the TASSIMCO Countdown Pedestrian Signal.

The pedestrian **LED** signal module shall be secured to the pedestrian housing and shall include a cut-away visor on the front of the pedestrian signal.

Pedestrian Push Button

Pedestrian push button shall be an all one piece construction design with raised cast legend and a plunger type push button with a minimum of 2-in in the smallest dimension meeting all requirements of the ADA.. The force required to activate the controls shall be no greater than 5-lbs.

Pedestrian push buttons shall be located as close as practicable to the sidewalk curb ramp serving the controlled crossing and shall permit operation from a clear ground space. The mounting height of the pedestrian push buttons shall be 42 inches above the finish sidewalk grade.

Emergency Vehicle Pre-Emption

Optically actuated emergency preemption equipment shall be installed for local control of the signals during the passing of appropriately equipped emergency vehicles through the intersection. Traffic Signal Plans and (Sequence & Timing Charts) illustrate the proposed location for the emergency preemption receivers and preempt control of the intersection.

The emergency vehicle preemption control system shall consist of a data-encoded phase selector to be installed within the traffic control cabinet. This unit will serve to validate, identify, classify, and record the signal from the optical detectors located on support structures at the intersection. Upon receiving a valid signal from the detector, the phase selector shall generate a preempt call to the controller initiating a preemption operation as shown on the plans.

The optical detectors shall be single point input, single output units used to control one approach. A minimum of two optical detectors shall be supplied un less otherwise noted on the major item list.

The **CONTRACTOR** shall install a confirmation strobe at the traffic signal intersection as shown on the plans or as directed by the Engineer.

The following description of work specifies the responsibilities involved in the installation of an optical Emergency Vehicle Preemption System.

The Contractor is required to supply material and labor, required or shown, for the complete

installation of the optical preemption equipment including optical detectors, confirmation strobe, cable, interfacing equipment to the local controller, making electrical connections and all required incidentals.

The following are the optical requirements of the emergency preemption system:

The Contractor shall arrange for a trained representative of the manufacturer of the optical energy preemption equipment to perform the following field supervision and turn-on services.

The representative shall initiate documentation for As-Built drawings.

The representative shall demonstrate the system and instruct the drivers of fire-fighting vehicles in the operation of the system. Any operation problems occurring within the next 30-days shall be corrected by the Contractor or by a Field Service Representative if the Contractor cannot do so.

The cost of these field supervision and turn-on services shall be included in the Lump Sum Bid Price, and no additional payment shall me made thereto. Preemption System designand Documentation shall include the following:

Provide the controller manufacturer, Engineer, and Owner with electrical diagrams.

The installer shall install the equipment consistent with the preemption equipment, the manufacturer's recommended installation procedures and electrical diagrams in a neat and workmanlike manner.

The preemption equipment manufacturer shall be responsible for the operational checkouts of the specified preemption functions prior to final acceptance and approval.

Operational checkouts includes the following:

Verify that the priority system timing and range are properly set.

Preemption equipment Warranties are put into effect.

Signal Timing and Sequence under Preemption Control is as shown on the preemption data included on the Contract Plans.

Software

All local controller, malfunction management unit, loop detector amplifier and emergency vehicle preemption software shall be supplied with the latest available revision. Any software upgrades released by the manufacturer shall be supplied at no additional cost to the Town of Holbrook for a period of five years after acceptance of the traffic signal installation.

Documentation

Each programmable local hardware component (I.e. controller, malfunction management unit, loop detector amplifier, emergency vehicle preemption phase selector) shall be initially programmed by the Contractor based on information contained on the plans.

Note: Three bound sets of hard copy programming per device shall be supplied to the Town of Sutton by the Contractor.

The Contractor shall supply an 8 1/2″ x 11″ laminated copy of the traffic signal design plan and sequence and timing chart to be left in the cabinet documentation envelope mounted on the inside of the cabinet door.

Existing Signal Installation

Existing signal installation to be removed shall be maintained in operation throughout the construction period and until the new signal system is ready for operation. The Contractor may install temporary supports for signal heads as necessary to allow for construction activities. Any temporary installation shall be in conformance with the MUTCD in every case. If an existing signal is to be turned off temporarily to allow controller switchover or requiring temporary turn-off, a Police Detail shall be used to control traffic at the intersection until stop-and-go operation is restored.

Once construction is completed and the new signal system is in operation, the old signal system shall be completely removed and stacked as directed by the Engineer in accordance with Section 816.80 but will be paid for under Item 815.01 as shown on the Major List of Items. Old cable and unusable materials shall be disposed of by the Contractor.

MEASUREMENT AND PAYMENT:

The work under items 815.01, shall be paid for at the Contract lump sum price per Item, which price shall include all labor, material, equipment and incidental costs required to install the new signal equipment complete and operating as specified. No separate payment will be made for the maintenance of existing signal installations during construction, but all costs in connection here with shall be included in the contract unit price bid.

4-INCH REFLECTORIZED WHITE LINE (PAINTED)
12-INCH REFLECTORIZED WHITE/YELLOW LINE (PAINTED)
4-INCH REFLECTORIZED YELLOW LINE (PAINTED)
4-INCH REFLECTORIZED DOUBLE YELLOW LINE (PAINTED)
4-INCH REFLECTORIZED WHITE/YELLOW LINE (THERMOPLASTIC)
4-INCH REFLECTORIZED DOUBLE YELLOW LINE (THERMOPLASTIC)

The work under these Items shall conform to the relevant provision of Section 860 of the Standard Specifications and the following:

Pavement markings shall be of thermoplastic reflectorized type conforming to M7.01.03 (White) and M7.01.04 (Yellow).

The design, application and installation of pavement markings shall conform to the Massachusetts Standard Drawings for Sign Supports, the Massachusetts Manual on Uniform Traffic Control Devices (MUTCD), and/or as directed by the Engineer.

Pavement markings (lines) shall be measured as the actual lengths (Linear Feet) of lines installed under various items of the contract, measured and accepted by the Engineer.

Payment for work under **Item 860.04: 4-in Reflectorized White Line (Painted); 860.12: 12-in Reflectorized White/Yellow (Painted); 861.04: 4-in Reflectorized Yellow Line (Painted); 861.08: 4-in Reflectorized Double Yellow Line (Painted); Item 866.04: 4-in Reflectorized White Line (Thermoplastic); Item 867.08: 4-in Reflectorized Double Yellow Line (Thermoplastic)** shall be at the contract unit prices, per Linear Foot. These prices shall be full compensation for all materials, tools, and equipment required and all other work incidental to the satisfactory completion of the work.

The measurement and payment provisions listed under Division 1, Section 01150 shall supplement the above payment provisions as applicable.

CONCRETE

The work under this Item shall conform to the relevant provisions of Section 901 of the Standard Specifications and the following:

The work shall consist of furnishing and placement of structural cement concrete, and steel reinforcements, where required for use in the construction of collars, plugs, thrust blocks, concrete steps, curbs, gutters, paved areas, bridging for trenches, conduit encasement, footings, foundation pads, walls, walkways and other miscellaneous items as shown on the drawings or as directed by the Engineer.

The materials and composition of mix shall meet the requirement of 4,000 psi (28 days), 3/4-inch, 610 Cement Concrete and conforming to the relevant provisions of Section M4.02.00.

Cement concrete under this **Item 904: Concrete for Miscellaneous Uses and Item 904.1: Concrete for Retaining Wall** shall be measured in Cubic Yards, complete in place and accepted by the Engineer. This price shall be full compensation for all labor, materials, equipment, tools and all else incidental thereto. The unit price shall also include all cement concrete mix, steel reinforcements, wire, metal clips, metal chains, form work, fastenings, supporting devices, dowels, concrete curing compounds, joints, fillers and sealants where required and all else incidental thereto and necessary to complete the work in a satisfactory manner.

The measurement and payment provisions listed under Division 1, Section 01150 shall supplement the above payment provisions as applicable.

TRAFFIC POLICE DETAILS

The work to be done under this section shall conform to the relevant provisions of section 7.00 of the Standard Specifications and supplemented by the following:

All uniformed traffic police personnel required for public safety and traffic control for construction projects located within the City shall be authorized by the Department of Public Work's Safety Officer and/or the Project Resident Engineer.

No payment will be made for personnel other than uniformed traffic police, nor will payment be made for uniformed traffic police not approved by the Engineer.

The project construction contractor shall submit a forecast weekly traffic police detail schedule, at least 72 hours days prior to the start of the work. The schedule shall describe the nature and location of the work, the number of police personnel and the estimated number of police hours required for each location. The Contractor must also include justification for each uniformed officer being requested. All payment to the police for work under this contract shall be in accordance with the Massachusetts General Laws, Chapter 149, Section 34B, which states that reserve police officers shall receive the same prevailing wage rate as paid to regular police officers.

While scheduling work in areas where uniformed traffic police is required, the Contractor must recognize that uniformed police are paid for a four-hour minimum. If uniformed police are arranged to work and weather or some other situation prohibits the work, the Police Department Detail Unit shall be notified at 479-1212 before **5:30 AM on the day of intended work** to cancel the work order. Unless the work order is canceled in time, the Contractor shall be charged at the rate of minimum four hours for each officer included in the detail. The Contractor shall be fully responsible for payment of all charges thus incurred.

The intent of posting police details is to insure public safety and protection of property through appropriate traffic control. Police personnel are not to be employed as watchmen to protect the Contractor's equipment and materials. Nothing contained herein shall be construed as relieving the Contractor of any of his responsibilities for protection of the public and property under the terms of the Contract.

Reimbursement to the Contractor for uniformed traffic police details shall be made from amounts allocated under **Pay Item 999.001: Traffic Police Details** in the schedule of quantities. Payment for uniformed traffic police officers will be paid for on the basis of the actual hours worked and verified by the Resident Engineer. The invoiced amounts paid by the Contractor may include standard administrative charges levied by the Police Department. The hourly rate stated in the schedule of quantities is for estimating purposes only and may not reflect the current hourly police rate.

The Contractor shall submit copies of all traffic police invoices paid (include copy of check paid to police) with its regular Application for Payment. These invoices shall clearly show the following:
a.) the project name;
b.) the officer's name;
c.) location of assignment;
d.) date of assignment;
e.) hours of assignment; and
f.) number of hours being invoiced.

Failure to include this information and a proof of payment with the "application for payment" shall result in non-payment of invoiced amount.

APPENDIX "A"

Commonwealth of Massachusetts
Division of Labor & Workforce Management
Minimum Wage Rates . . . . . 36 pages

THE COMMONWEALTH OF MASSACHUSETTS
EXECUTIVE OFFICE OF LABOR AND WORKFORCE DEVELOPMENT
DEPARTMENT OF LABOR STANDARDS

Prevailing Wage Rates

As determined by the Director under the provisions of the Massachusetts General Laws, Chapter 149, Sections 26 to 27H

DEVAL L. PATRICK
Governor
TIMOTHY P. MURRAY
Lt. Governor

JOANNE F. GOLDSTEIN
Secretary
HEATHER E. ROWE
Director

Awarding Authority: City of Quincy

Contract Number:

City/Town: QUINCY

Description of Work: Road improvements and Traffic Signal improvements including tree planting

Job Location: Adams St. to Common St.- Milton Town line.

Information about Prevailing Wage Schedules for Awarding Authorities and Contractors

- This wage schedule applies only to the specific project referenced at the top of this page and uniquely identified by the "Wage Request Number" on all pages of this schedule.
- Awarding authorities must request an updated wage schedule from the Department of Labor Standards ("DLS") if it has not opened bids or selected a contractor within 90 days of the date of issuance of the wage schedule.
- The wage schedule shall be incorporated in any advertisement or call for bids for the project as required by M.G.L. c. 149, § 27. Once a contractor has been selected by the awarding authority, the wage schedule shall be made a part of the contract for that project. The wage schedule must be posted in a conspicuous place at the work site during the life of the project in accordance with M.G.L. c. 149, § 27. The wages listed on the wage schedule must be paid to employees performing construction work on the project regardless of whether they are employed by the prime contractor, a filed sub-bidder, or any sub-contractor.
- All apprentices working on the project are required to be registered with the Massachusetts Division of Apprentice Training (DAT). Apprentices must keep his/her apprentice identification card on his/her person during all work hours on the project. If an apprentice rate is listed on the prevailing wage schedule for the trade in which an apprentice is registered with the DAT, the apprentice may be paid the lower apprentice wage rate at the applicable step as provided on the prevailing wage schedule. **If an apprentice rate is not listed on the prevailing wage schedule for the trade in which an apprentice is registered with the DAT, the apprentice must be paid the journeyworker's rate for the trade.**
- The wage rates will remain in effect for the duration of the project, except in the case of multi-year public construction projects. For construction projects lasting longer than one year, awarding authorities must request an updated wage schedule. Awarding authorities are required to request these updates no later than two weeks before the anniversary of the date the contract was executed by the awarding authority and the general contractor. Contractors are required to obtain the wage schedules from awarding authorities, and to pay no less than these rates to covered workers. The annual update requirement is not applicable to 27F "rental of equipment" contracts.
- Every contractor or subcontractor which performs construction work on the project is required to submit weekly payroll reports directly to the awarding authority and keep them on file for three years. Each weekly payroll report must contain: the employee's name, address, occupational classification, hours worked, and wages paid. Do not submit weekly payroll reports to DLS. A sample of a payroll reporting form may be obtained at http://www.mass.gov/dols/pw.
- Contractors with questions about the wage rates or classifications included on the wage schedule have an affirmative obligation to inquire with DLS at (617) 626-6953.
- Employees not receiving the prevailing wage rate set forth on the wage schedule may report the violation to the Fair Labor Division of the office of the Attorney General at (617) 727-3465.
- Failure of a contractor or subcontractor to pay the prevailing wage rates listed on the wage schedule to all employees who perform construction work on the project is a violation of the law and subjects the contractor or subcontractor to civil and criminal penalties.

Issue Date: 07/01/2013 **Wage Request Number:** 20130701-027

Classification	Effective Date	Base Wage	Health	Pension	Supplemental Unemployment	Total Rate
Construction						
(2 AXLE) DRIVER - EQUIPMENT *TEAMSTERS JOINT COUNCIL NO. 10 ZONE A*	12/01/2012	$31.55	$8.91	$8.00	$0.00	$48.46
(3 AXLE) DRIVER - EQUIPMENT *TEAMSTERS JOINT COUNCIL NO. 10 ZONE A*	12/01/2012	$31.62	$8.91	$8.00	$0.00	$48.53
(4 & 5 AXLE) DRIVER - EQUIPMENT *TEAMSTERS JOINT COUNCIL NO. 10 ZONE A*	12/01/2012	$31.74	$8.91	$8.00	$0.00	$48.65
ADS/SUBMERSIBLE PILOT *PILE DRIVER LOCAL 56 (ZONE 1)*	08/01/2012	$82.32	$9.80	$17.67	$0.00	$109.79
	08/01/2013	$85.47	$9.80	$17.67	$0.00	$112.94
	08/01/2014	$88.62	$9.80	$17.67	$0.00	$116.09
	08/01/2015	$91.77	$9.80	$17.67	$0.00	$119.24
AIR TRACK OPERATOR *LABORERS - ZONE 1*	06/01/2013	$33.80	$7.10	$12.45	$0.00	$53.35
	12/01/2013	$34.55	$7.10	$12.45	$0.00	$54.10
	06/01/2014	$35.30	$7.10	$12.45	$0.00	$54.85
	12/01/2014	$36.05	$7.10	$12.45	$0.00	$55.60
	06/01/2015	$36.80	$7.10	$12.45	$0.00	$56.35
	12/01/2015	$37.55	$7.10	$12.45	$0.00	$57.10
	06/01/2016	$38.30	$7.10	$12.45	$0.00	$57.85
	12/01/2016	$39.30	$7.10	$12.45	$0.00	$58.85
For apprentice rates see "Apprentice- LABORER"						
ASBESTOS REMOVER - PIPE / MECH. EQUIPT. *HEAT & FROST INSULATORS LOCAL 6 (BOSTON)*	06/01/2013	$29.88	$10.40	$5.95	$0.00	$46.23
	12/01/2013	$30.68	$10.40	$5.95	$0.00	$47.03
	06/01/2014	$31.58	$10.40	$5.95	$0.00	$47.93
	12/01/2014	$32.48	$10.40	$5.95	$0.00	$48.83
	06/01/2015	$33.43	$10.40	$5.95	$0.00	$49.78
	12/01/2015	$34.38	$10.40	$5.95	$0.00	$50.73
ASPHALT RAKER *LABORERS - ZONE 1*	06/01/2013	$33.30	$7.10	$12.45	$0.00	$52.85
	12/01/2013	$34.05	$7.10	$12.45	$0.00	$53.60
	06/01/2014	$34.80	$7.10	$12.45	$0.00	$54.35
	12/01/2014	$35.55	$7.10	$12.45	$0.00	$55.10
	06/01/2015	$36.30	$7.10	$12.45	$0.00	$55.85
	12/01/2015	$37.05	$7.10	$12.45	$0.00	$56.60
	06/01/2016	$37.80	$7.10	$12.45	$0.00	$57.35
	12/01/2016	$38.80	$7.10	$12.45	$0.00	$58.35
For apprentice rates see "Apprentice- LABORER"						
ASPHALT/CONCRETE/CRUSHER PLANT-ON SITE *OPERATING ENGINEERS LOCAL 4*	06/01/2013	$40.34	$10.00	$13.55	$0.00	$63.89
	12/01/2013	$41.12	$10.00	$13.55	$0.00	$64.67
For apprentice rates see "Apprentice- OPERATING ENGINEERS"						
BACKHOE/FRONT-END LOADER *OPERATING ENGINEERS LOCAL 4*	06/01/2013	$40.34	$10.00	$13.55	$0.00	$63.89
	12/01/2013	$41.12	$10.00	$13.55	$0.00	$64.67
For apprentice rates see "Apprentice- OPERATING ENGINEERS"						

Classification	Effective Date	Base Wage	Health	Pension	Supplemental Unemployment	Total Rate
BARCO-TYPE JUMPING TAMPER *LABORERS - ZONE 1*	06/01/2013	$33.30	$7.10	$12.45	$0.00	$52.85
	12/01/2013	$34.05	$7.10	$12.45	$0.00	$53.60
	06/01/2014	$34.80	$7.10	$12.45	$0.00	$54.35
	12/01/2014	$35.55	$7.10	$12.45	$0.00	$55.10
	06/01/2015	$36.30	$7.10	$12.45	$0.00	$55.85
	12/01/2015	$37.05	$7.10	$12.45	$0.00	$56.60
	06/01/2016	$37.80	$7.10	$12.45	$0.00	$57.35
	12/01/2016	$38.80	$7.10	$12.45	$0.00	$58.35
For apprentice rates see "Apprentice- LABORER"						
BLOCK PAVER, RAMMER / CURB SETTER *LABORERS - ZONE 1*	06/01/2013	$33.80	$7.10	$12.45	$0.00	$53.35
	12/01/2013	$34.55	$7.10	$12.45	$0.00	$54.10
	06/01/2014	$35.30	$7.10	$12.45	$0.00	$54.85
	12/01/2014	$36.05	$7.10	$12.45	$0.00	$55.60
	06/01/2015	$36.80	$7.10	$12.45	$0.00	$56.35
	12/01/2015	$37.55	$7.10	$12.45	$0.00	$57.10
	06/01/2016	$38.30	$7.10	$12.45	$0.00	$57.85
	12/01/2016	$39.30	$7.10	$12.45	$0.00	$58.85
For apprentice rates see "Apprentice- LABORER"						
BOILER MAKER *BOILERMAKERS LOCAL 29*	01/01/2010	$37.70	$6.97	$11.18	$0.00	$55.85

Apprentice - *BOILERMAKER - Local 29*

Effective Date - 01/01/2010

Step	percent	Apprentice Base Wage	Health	Pension	Supplemental Unemployment	Total Rate
1	65	$24.51	$6.97	$11.18	$0.00	$42.66
2	65	$24.51	$6.97	$11.18	$0.00	$42.66
3	70	$26.39	$6.97	$11.18	$0.00	$44.54
4	75	$28.28	$6.97	$11.18	$0.00	$46.43
5	80	$30.16	$6.97	$11.18	$0.00	$48.31
6	85	$32.05	$6.97	$11.18	$0.00	$50.20
7	90	$33.93	$6.97	$11.18	$0.00	$52.08
8	95	$35.82	$6.97	$11.18	$0.00	$53.97

Notes:

Apprentice to Journeyworker Ratio:1:5

BRICK/STONE/ARTIFICIAL MASONRY (INCL. MASONRY WATERPROOFING) *BRICKLAYERS LOCAL 3 (QUINCY)*	02/01/2013	$47.41	$10.18	$17.83	$0.00	$75.42
	08/01/2013	$48.31	$10.18	$17.90	$0.00	$76.39
	02/01/2014	$48.87	$10.18	$17.90	$0.00	$76.95
	08/01/2014	$49.77	$10.18	$17.97	$0.00	$77.92
	02/01/2015	$50.33	$10.18	$17.97	$0.00	$78.48
	08/01/2015	$51.23	$10.18	$18.04	$0.00	$79.45
	02/01/2016	$51.80	$10.18	$18.04	$0.00	$80.02
	08/01/2016	$52.70	$10.18	$18.12	$0.00	$81.00
	02/01/2017	$53.27	$10.18	$18.12	$0.00	$81.57

Classification	Effective Date	Base Wage	Health	Pension	Supplemental Unemployment	Total Rate

Apprentice - *BRICK/PLASTER/CEMENT MASON - Local 3 Quincy*

Effective Date - 02/01/2013

Step	percent	Apprentice Base Wage	Health	Pension	Supplemental Unemployment	Total Rate
1	50	$23.71	$10.18	$17.83	$0.00	$51.72
2	60	$28.45	$10.18	$17.83	$0.00	$56.46
3	70	$33.19	$10.18	$17.83	$0.00	$61.20
4	80	$37.93	$10.18	$17.83	$0.00	$65.94
5	90	$42.67	$10.18	$17.83	$0.00	$70.68

Effective Date - 08/01/2013

Step	percent	Apprentice Base Wage	Health	Pension	Supplemental Unemployment	Total Rate
1	50	$24.16	$10.18	$17.90	$0.00	$52.24
2	60	$28.99	$10.18	$17.90	$0.00	$57.07
3	70	$33.82	$10.18	$17.90	$0.00	$61.90
4	80	$38.65	$10.18	$17.90	$0.00	$66.73
5	90	$43.48	$10.18	$17.90	$0.00	$71.56

Notes:

Apprentice to Journeyworker Ratio:1:5

BULLDOZER/GRADER/SCRAPER *OPERATING ENGINEERS LOCAL 4*	06/01/2013	$39.96	$10.00	$13.55	$0.00	$63.51
	12/01/2013	$40.74	$10.00	$13.55	$0.00	$64.29
For apprentice rates see "Apprentice- OPERATING ENGINEERS"						
CAISSON & UNDERPINNING BOTTOM MAN *LABORERS - FOUNDATION AND MARINE*	06/01/2013	$34.20	$7.10	$12.60	$0.00	$53.90
	12/01/2013	$34.95	$7.10	$12.60	$0.00	$54.65
	06/01/2014	$35.70	$7.10	$12.60	$0.00	$55.40
	12/01/2014	$36.45	$7.10	$12.60	$0.00	$56.15
	06/01/2015	$37.20	$7.10	$12.60	$0.00	$56.90
	12/01/2015	$37.95	$7.10	$12.60	$0.00	$57.65
	06/01/2016	$38.70	$7.10	$12.60	$0.00	$58.40
	12/01/2016	$39.70	$7.10	$12.60	$0.00	$59.40
For apprentice rates see "Apprentice- LABORER"						
CAISSON & UNDERPINNING LABORER *LABORERS - FOUNDATION AND MARINE*	06/01/2013	$33.05	$7.10	$12.60	$0.00	$52.75
	12/01/2013	$33.80	$7.10	$12.60	$0.00	$53.50
	06/01/2014	$34.55	$7.10	$12.60	$0.00	$54.25
	12/01/2014	$35.30	$7.10	$12.60	$0.00	$55.00
	06/01/2015	$36.05	$7.10	$12.60	$0.00	$55.75
	12/01/2015	$36.80	$7.10	$12.60	$0.00	$56.50
	06/01/2016	$37.55	$7.10	$12.60	$0.00	$57.25
	12/01/2016	$38.55	$7.10	$12.60	$0.00	$58.25
For apprentice rates see "Apprentice- LABORER"						

Classification	Effective Date	Base Wage	Health	Pension	Supplemental Unemployment	Total Rate
CAISSON & UNDERPINNING TOP MAN *LABORERS - FOUNDATION AND MARINE*	06/01/2013	$33.05	$7.10	$12.60	$0.00	$52.75
	12/01/2013	$33.80	$7.10	$12.60	$0.00	$53.50
	06/01/2014	$34.55	$7.10	$12.60	$0.00	$54.25
	12/01/2014	$35.30	$7.10	$12.60	$0.00	$55.00
	06/01/2015	$36.05	$7.10	$12.60	$0.00	$55.75
	12/01/2015	$36.80	$7.10	$12.60	$0.00	$56.50
	06/01/2016	$37.55	$7.10	$12.60	$0.00	$57.25
	12/01/2016	$38.55	$7.10	$12.60	$0.00	$58.25
For apprentice rates see "Apprentice- LABORER"						
CARBIDE CORE DRILL OPERATOR *LABORERS - ZONE 1*	06/01/2013	$33.30	$7.10	$12.45	$0.00	$52.85
	12/01/2013	$34.05	$7.10	$12.45	$0.00	$53.60
	06/01/2014	$34.80	$7.10	$12.45	$0.00	$54.35
	12/01/2014	$35.55	$7.10	$12.45	$0.00	$55.10
	06/01/2015	$36.30	$7.10	$12.45	$0.00	$55.85
	12/01/2015	$37.05	$7.10	$12.45	$0.00	$56.60
	06/01/2016	$37.80	$7.10	$12.45	$0.00	$57.35
	12/01/2016	$38.80	$7.10	$12.45	$0.00	$58.35
For apprentice rates see "Apprentice- LABORER"						
CARPENTER *CARPENTERS -ZONE 2 (Eastern Massachusetts)*	03/01/2013	$33.92	$9.80	$15.61	$0.00	$59.33
	09/01/2013	$34.53	$9.80	$15.61	$0.00	$59.94
	03/01/2014	$35.13	$9.80	$15.61	$0.00	$60.54
	09/01/2014	$35.90	$9.80	$15.61	$0.00	$61.31
	03/01/2015	$36.67	$9.80	$15.61	$0.00	$62.08

Classification	Effective Date	Base Wage	Health	Pension	Supplemental Unemployment	Total Rate

Apprentice - *CARPENTER - Zone 2 Eastern MA*

Effective Date - 03/01/2013

Step	percent	Apprentice Base Wage	Health	Pension	Supplemental Unemployment	Total Rate
1	50	$16.96	$9.80	$1.57	$0.00	$28.33
2	60	$20.35	$9.80	$1.57	$0.00	$31.72
3	70	$23.74	$9.80	$10.90	$0.00	$44.44
4	75	$25.44	$9.80	$10.90	$0.00	$46.14
5	80	$27.14	$9.80	$12.47	$0.00	$49.41
6	80	$27.14	$9.80	$12.47	$0.00	$49.41
7	90	$30.53	$9.80	$14.04	$0.00	$54.37
8	90	$30.53	$9.80	$14.04	$0.00	$54.37

Effective Date - 09/01/2013

Step	percent	Apprentice Base Wage	Health	Pension	Supplemental Unemployment	Total Rate
1	50	$17.27	$9.80	$1.57	$0.00	$28.64
2	60	$20.72	$9.80	$1.57	$0.00	$32.09
3	70	$24.17	$9.80	$10.90	$0.00	$44.87
4	75	$25.90	$9.80	$10.90	$0.00	$46.60
5	80	$27.62	$9.80	$12.47	$0.00	$49.89
6	80	$27.62	$9.80	$12.47	$0.00	$49.89
7	90	$31.08	$9.80	$14.04	$0.00	$54.92
8	90	$31.08	$9.80	$14.04	$0.00	$54.92

Notes:

Apprentice to Journeyworker Ratio:1:5

CEMENT MASONRY/PLASTERING *BRICKLAYERS LOCAL 3 (QUINCY)*	07/01/2013	$42.74	$10.65	$18.61	$1.30	$73.30
	01/01/2014	$43.66	$10.65	$18.61	$1.30	$74.22
	07/01/2014	$44.26	$10.65	$18.61	$1.30	$74.82
	01/01/2015	$45.20	$10.65	$18.61	$1.30	$75.76
	07/01/2015	$45.78	$10.65	$18.61	$1.30	$76.34
	01/01/2016	$46.70	$10.65	$18.61	$1.30	$77.26

Classification	Effective Date	Base Wage	Health	Pension	Supplemental Unemployment	Total Rate

Apprentice - *CEMENT MASONRY/PLASTERING - Eastern Mass (Quincy)*

Effective Date - 07/01/2013

Step	percent	Apprentice Base Wage	Health	Pension	Supplemental Unemployment	Total Rate
1	50	$21.37	$10.65	$12.11	$1.30	$45.43
2	60	$25.64	$10.65	$13.61	$1.30	$51.20
3	65	$27.78	$10.65	$14.61	$1.30	$54.34
4	70	$29.92	$10.65	$15.61	$1.30	$57.48
5	75	$32.06	$10.65	$16.61	$1.30	$60.62
6	80	$34.19	$10.65	$17.61	$1.30	$63.75
7	90	$38.47	$10.65	$18.61	$1.30	$69.03

Effective Date - 01/01/2014

Step	percent	Apprentice Base Wage	Health	Pension	Supplemental Unemployment	Total Rate
1	50	$21.83	$10.65	$12.11	$1.30	$45.89
2	60	$26.20	$10.65	$13.61	$1.30	$51.76
3	65	$28.38	$10.65	$14.61	$1.30	$54.94
4	70	$30.56	$10.65	$15.61	$1.30	$58.12
5	75	$32.75	$10.65	$16.61	$1.30	$61.31
6	80	$34.93	$10.65	$17.61	$1.30	$64.49
7	90	$39.29	$10.65	$18.61	$1.30	$69.85

Notes:

Steps 3,4 are 500 hrs. All other steps are 1,000 hrs.

Apprentice to Journeyworker Ratio:1:3

CHAIN SAW OPERATOR *LABORERS - ZONE 1*	06/01/2013	$33.30	$7.10	$12.45	$0.00	$52.85
	12/01/2013	$34.05	$7.10	$12.45	$0.00	$53.60
	06/01/2014	$34.80	$7.10	$12.45	$0.00	$54.35
	12/01/2014	$35.55	$7.10	$12.45	$0.00	$55.10
	06/01/2015	$36.30	$7.10	$12.45	$0.00	$55.85
	12/01/2015	$37.05	$7.10	$12.45	$0.00	$56.60
	06/01/2016	$37.80	$7.10	$12.45	$0.00	$57.35
	12/01/2016	$38.80	$7.10	$12.45	$0.00	$58.35
For apprentice rates see "Apprentice- LABORER"						
CLAM SHELLS/SLURRY BUCKETS/HEADING MACHINES *OPERATING ENGINEERS LOCAL 4*	06/01/2013	$41.34	$10.00	$13.55	$0.00	$64.89
	12/01/2013	$42.12	$10.00	$13.55	$0.00	$65.67
For apprentice rates see "Apprentice- OPERATING ENGINEERS"						
COMPRESSOR OPERATOR *OPERATING ENGINEERS LOCAL 4*	06/01/2013	$28.19	$10.00	$13.55	$0.00	$51.74
	12/01/2013	$28.74	$10.00	$13.55	$0.00	$52.29
For apprentice rates see "Apprentice- OPERATING ENGINEERS"						
DELEADER (BRIDGE) *PAINTERS LOCAL 35 - ZONE 2*	01/01/2013	$45.01	$7.80	$15.60	$0.00	$68.41

Classification	Effective Date	Base Wage	Health	Pension	Supplemental Unemployment	Total Rate

Apprentice - *PAINTER Local 35 - BRIDGES/TANKS*

Effective Date - 01/01/2013

Step	percent	Apprentice Base Wage	Health	Pension	Supplemental Unemployment	Total Rate
1	50	$22.51	$7.80	$0.00	$0.00	$30.31
2	55	$24.76	$7.80	$3.52	$0.00	$36.08
3	60	$27.01	$7.80	$3.84	$0.00	$38.65
4	65	$29.26	$7.80	$4.16	$0.00	$41.22
5	70	$31.51	$7.80	$13.68	$0.00	$52.99
6	75	$33.76	$7.80	$14.00	$0.00	$55.56
7	80	$36.01	$7.80	$14.32	$0.00	$58.13
8	90	$40.51	$7.80	$14.96	$0.00	$63.27

Notes:

Steps are 750 hrs.

Apprentice to Journeyworker Ratio:1:1

DEMO: ADZEMAN *LABORERS - ZONE 1* For apprentice rates see "Apprentice- LABORER"	12/01/2011	$31.80	$7.10	$12.45	$0.00	$51.35
DEMO: BACKHOE/LOADER/HAMMER OPERATOR *LABORERS - ZONE 1* For apprentice rates see "Apprentice- LABORER"	12/01/2011	$32.80	$7.10	$12.45	$0.00	$52.35
DEMO: BURNERS *LABORERS - ZONE 1* For apprentice rates see "Apprentice- LABORER"	12/01/2011	$32.55	$7.10	$12.45	$0.00	$52.10
DEMO: CONCRETE CUTTER/SAWYER *LABORERS - ZONE 1* For apprentice rates see "Apprentice- LABORER"	12/01/2011	$32.80	$7.10	$12.45	$0.00	$52.35
DEMO: JACKHAMMER OPERATOR *LABORERS - ZONE 1* For apprentice rates see "Apprentice- LABORER"	12/01/2011	$32.55	$7.10	$12.45	$0.00	$52.10
DEMO: WRECKING LABORER *LABORERS - ZONE 1* For apprentice rates see "Apprentice- LABORER"	12/01/2011	$31.80	$7.10	$12.45	$0.00	$51.35
DIRECTIONAL DRILL MACHINE OPERATOR *OPERATING ENGINEERS LOCAL 4*	06/01/2013	$39.96	$10.00	$13.55	$0.00	$63.51
For apprentice rates see "Apprentice- OPERATING ENGINEERS"	12/01/2013	$40.74	$10.00	$13.55	$0.00	$64.29
DIVER *PILE DRIVER LOCAL 56 (ZONE 1)*	08/01/2012	$54.88	$9.80	$17.67	$0.00	$82.35
	08/01/2013	$56.98	$9.80	$17.67	$0.00	$84.45
	08/01/2014	$59.08	$9.80	$17.67	$0.00	$86.55
	08/01/2015	$61.18	$9.80	$17.67	$0.00	$88.65
DIVER TENDER *PILE DRIVER LOCAL 56 (ZONE 1)*	08/01/2012	$54.88	$9.80	$17.67	$0.00	$82.35
	08/01/2013	$56.98	$9.80	$17.67	$0.00	$84.45
	08/01/2014	$59.08	$9.80	$17.67	$0.00	$86.55
	08/01/2015	$61.18	$9.80	$17.67	$0.00	$88.65

Classification	Effective Date	Base Wage	Health	Pension	Supplemental Unemployment	Total Rate
DIVER TENDER (EFFLUENT) *PILE DRIVER LOCAL 56 (ZONE 1)*	08/01/2012	$58.80	$9.80	$17.67	$0.00	$86.27
	08/01/2013	$61.05	$9.80	$17.67	$0.00	$88.52
	08/01/2014	$63.30	$9.80	$17.67	$0.00	$90.77
	08/01/2015	$65.55	$9.80	$17.67	$0.00	$93.02
DIVER/SLURRY (EFFLUENT) *PILE DRIVER LOCAL 56 (ZONE 1)*	08/01/2012	$82.32	$9.80	$17.67	$0.00	$109.79
	08/01/2013	$85.47	$9.80	$17.67	$0.00	$112.94
	08/01/2014	$88.62	$9.80	$17.67	$0.00	$116.09
	08/01/2015	$91.77	$9.80	$17.67	$0.00	$119.24
DRAWBRIDGE OPERATOR (Construction) *ELECTRICIANS LOCAL 103*	03/01/2013	$43.52	$13.00	$14.16	$0.00	$70.68
	09/01/2013	$44.20	$13.00	$14.18	$0.00	$71.38
	03/01/2014	$44.92	$13.00	$14.20	$0.00	$72.12
	09/01/2014	$45.60	$13.00	$14.22	$0.00	$72.82
	03/01/2015	$46.32	$13.00	$14.24	$0.00	$73.56
	09/01/2015	$47.27	$13.00	$14.27	$0.00	$74.54
	03/01/2016	$48.23	$13.00	$14.30	$0.00	$75.53
For apprentice rates see "Apprentice- ELECTRICIAN"						
ELECTRICIAN *ELECTRICIANS LOCAL 103*	03/01/2013	$43.52	$13.00	$14.16	$0.00	$70.68
	09/01/2013	$44.20	$13.00	$14.18	$0.00	$71.38
	03/01/2014	$44.92	$13.00	$14.20	$0.00	$72.12
	09/01/2014	$45.60	$13.00	$14.22	$0.00	$72.82
	03/01/2015	$46.32	$13.00	$14.24	$0.00	$73.56
	09/01/2015	$47.27	$13.00	$14.27	$0.00	$74.54
	03/01/2016	$48.23	$13.00	$14.30	$0.00	$75.53

Classification	Effective Date	Base Wage	Health	Pension	Supplemental Unemployment	Total Rate

Apprentice - *ELECTRICIAN - Local 103*

Effective Date - 03/01/2013

Step	percent	Apprentice Base Wage	Health	Pension	Supplemental Unemployment	Total Rate
1	40	$17.41	$13.00	$0.52	$0.00	$30.93
2	40	$17.41	$13.00	$0.52	$0.00	$30.93
3	45	$19.58	$13.00	$10.53	$0.00	$43.11
4	45	$19.58	$13.00	$10.53	$0.00	$43.11
5	50	$21.76	$13.00	$10.85	$0.00	$45.61
6	55	$23.94	$13.00	$11.19	$0.00	$48.13
7	60	$26.11	$13.00	$11.51	$0.00	$50.62
8	65	$28.29	$13.00	$11.85	$0.00	$53.14
9	70	$30.46	$13.00	$12.17	$0.00	$55.63
10	75	$32.64	$13.00	$12.51	$0.00	$58.15

Effective Date - 09/01/2013

Step	percent	Apprentice Base Wage	Health	Pension	Supplemental Unemployment	Total Rate
1	40	$17.68	$13.00	$0.53	$0.00	$31.21
2	40	$17.68	$13.00	$0.53	$0.00	$31.21
3	45	$19.89	$13.00	$10.54	$0.00	$43.43
4	45	$19.89	$13.00	$10.54	$0.00	$43.43
5	50	$22.10	$13.00	$10.86	$0.00	$45.96
6	55	$24.31	$13.00	$11.20	$0.00	$48.51
7	60	$26.52	$13.00	$11.53	$0.00	$51.05
8	65	$28.73	$13.00	$11.86	$0.00	$53.59
9	70	$30.94	$13.00	$12.19	$0.00	$56.13
10	75	$33.15	$13.00	$12.53	$0.00	$58.68

Notes: :

App Prior 1/1/03; 30/35/40/45/50/55/65/70/75/80

Apprentice to Journeyworker Ratio:2:3***

ELEVATOR CONSTRUCTOR *ELEVATOR CONSTRUCTORS LOCAL 4*	01/01/2012	$52.45	$8.78	$6.96	$0.00	$68.19

Classification	Effective Date	Base Wage	Health	Pension	Supplemental Unemployment	Total Rate

Apprentice - *ELEVATOR CONSTRUCTOR - Local 4*

Effective Date - 01/01/2012

Step	percent	Apprentice Base Wage	Health	Pension	Supplemental Unemployment	Total Rate
1	50	$26.23	$8.78	$0.00	$0.00	$35.01
2	55	$28.85	$8.78	$6.96	$0.00	$44.59
3	65	$34.09	$8.78	$6.96	$0.00	$49.83
4	70	$36.72	$8.78	$6.96	$0.00	$52.46
5	80	$41.96	$8.78	$6.96	$0.00	$57.70

Notes:

Steps 1-2 are 6 mos.; Steps 3-5 are 1 year

Apprentice to Journeyworker Ratio:1:1

ELEVATOR CONSTRUCTOR HELPER *ELEVATOR CONSTRUCTORS LOCAL 4*	01/01/2012	$38.59	$8.78	$6.96	$0.00	$54.33
FENCE & GUARD RAIL ERECTOR *LABORERS - ZONE 1*	06/01/2013	$33.30	$7.10	$12.45	$0.00	$52.85
	12/01/2013	$34.05	$7.10	$12.45	$0.00	$53.60
	06/01/2014	$34.80	$7.10	$12.45	$0.00	$54.35
	12/01/2014	$35.55	$7.10	$12.45	$0.00	$55.10
	06/01/2015	$36.30	$7.10	$12.45	$0.00	$55.85
	12/01/2015	$37.05	$7.10	$12.45	$0.00	$56.60
	06/01/2016	$37.80	$7.10	$12.45	$0.00	$57.35
	12/01/2016	$38.80	$7.10	$12.45	$0.00	$58.35
For apprentice rates see "Apprentice- LABORER"						
FIELD ENG.INST.PERSON-BLDG,SITE,HVY/HWY *OPERATING ENGINEERS LOCAL 4*	05/01/2013	$38.50	$10.00	$13.02	$0.00	$61.52
	11/01/2013	$39.26	$10.00	$13.02	$0.00	$62.28
	05/01/2014	$40.03	$10.00	$13.02	$0.00	$63.05
For apprentice rates see "Apprentice- OPERATING ENGINEERS"						
FIELD ENG.PARTY CHIEF-BLDG,SITE,HVY/HWY *OPERATING ENGINEERS LOCAL 4*	05/01/2013	$39.91	$10.00	$13.02	$0.00	$62.93
	11/01/2013	$40.68	$10.00	$13.02	$0.00	$63.70
	05/01/2014	$41.45	$10.00	$13.02	$0.00	$64.47
For apprentice rates see "Apprentice- OPERATING ENGINEERS"						
FIELD ENG.ROD PERSON-BLDG,SITE,HVY/HWY *OPERATING ENGINEERS LOCAL 4*	05/01/2013	$21.17	$10.00	$13.02	$0.00	$44.19
	11/01/2013	$21.63	$10.00	$13.02	$0.00	$44.65
	05/01/2014	$22.08	$10.00	$13.02	$0.00	$45.10
For apprentice rates see "Apprentice- OPERATING ENGINEERS"						
FIRE ALARM INSTALLER *ELECTRICIANS LOCAL 103*	03/01/2013	$43.52	$13.00	$14.16	$0.00	$70.68
	09/01/2013	$44.20	$13.00	$14.18	$0.00	$71.38
	03/01/2014	$44.92	$13.00	$14.20	$0.00	$72.12
	09/01/2014	$45.60	$13.00	$14.22	$0.00	$72.82
	03/01/2015	$46.32	$13.00	$14.24	$0.00	$73.56
	09/01/2015	$47.27	$13.00	$14.27	$0.00	$74.54
	03/01/2016	$48.23	$13.00	$14.30	$0.00	$75.53
For apprentice rates see "Apprentice- ELECTRICIAN"						

Classification	Effective Date	Base Wage	Health	Pension	Supplemental Unemployment	Total Rate
FIRE ALARM REPAIR / MAINTENANCE / COMMISSIONING *ELECTRICIANS LOCAL 103*	03/01/2013	$32.64	$13.00	$12.51	$0.00	$58.15
	09/01/2013	$33.15	$13.00	$12.52	$0.00	$58.67
	03/01/2014	$33.69	$13.00	$12.54	$0.00	$59.23
	09/01/2014	$34.20	$13.00	$12.56	$0.00	$59.76
	03/01/2015	$34.74	$13.00	$12.57	$0.00	$60.31
	09/01/2015	$35.45	$13.00	$12.59	$0.00	$61.04
	03/01/2016	$36.17	$13.00	$12.62	$0.00	$61.79
For apprentice rates see "Apprentice- TELECOMMUNICATIONS TECHNICIAN"						
FIREMAN (ASST. ENGINEER) *OPERATING ENGINEERS LOCAL 4*	06/01/2013	$33.73	$10.00	$13.55	$0.00	$57.28
	12/01/2013	$34.39	$10.00	$13.55	$0.00	$57.94
For apprentice rates see "Apprentice- OPERATING ENGINEERS"						
FLAGGER & SIGNALER *LABORERS - ZONE 1*	06/01/2013	$20.50	$7.10	$12.45	$0.00	$40.05
	12/01/2013	$20.50	$7.10	$12.45	$0.00	$40.05
	06/01/2014	$20.50	$7.10	$12.45	$0.00	$40.05
	12/01/2014	$20.50	$7.10	$12.45	$0.00	$40.05
	06/01/2015	$20.50	$7.10	$12.45	$0.00	$40.05
	12/01/2015	$20.50	$7.10	$12.45	$0.00	$40.05
	06/01/2016	$20.50	$7.10	$12.45	$0.00	$40.05
	12/01/2016	$20.50	$7.10	$12.45	$0.00	$40.05
For apprentice rates see "Apprentice- LABORER"						
FLOORCOVERER *FLOORCOVERERS LOCAL 2168 ZONE 1*	03/01/2013	$38.61	$9.80	$16.71	$0.00	$65.12
	09/01/2013	$38.61	$9.80	$16.71	$0.00	$65.12
	03/01/2014	$38.61	$9.80	$16.71	$0.00	$65.12

Classification	Effective Date	Base Wage	Health	Pension	Supplemental Unemployment	Total Rate

Apprentice - *FLOORCOVERER - Local 2168 Zone 1*

Effective Date - 03/01/2013

Step	percent	Apprentice Base Wage	Health	Pension	Supplemental Unemployment	Total Rate
1	50	$19.31	$9.80	$1.79	$0.00	$30.90
2	55	$21.24	$9.80	$1.79	$0.00	$32.83
3	60	$23.17	$9.80	$11.34	$0.00	$44.31
4	65	$25.10	$9.80	$11.34	$0.00	$46.24
5	70	$27.03	$9.80	$13.13	$0.00	$49.96
6	75	$28.96	$9.80	$13.13	$0.00	$51.89
7	80	$30.89	$9.80	$14.92	$0.00	$55.61
8	85	$32.82	$9.80	$14.92	$0.00	$57.54

Effective Date - 09/01/2013

Step	percent	Apprentice Base Wage	Health	Pension	Supplemental Unemployment	Total Rate
1	50	$19.31	$9.80	$1.79	$0.00	$30.90
2	55	$21.24	$9.80	$1.79	$0.00	$32.83
3	60	$23.17	$9.80	$11.34	$0.00	$44.31
4	65	$25.10	$9.80	$11.34	$0.00	$46.24
5	70	$27.03	$9.80	$13.13	$0.00	$49.96
6	75	$28.96	$9.80	$13.13	$0.00	$51.89
7	80	$30.89	$9.80	$14.92	$0.00	$55.61
8	85	$32.82	$9.80	$14.92	$0.00	$57.54

Notes:

Steps are 750 hrs.

Apprentice to Journeyworker Ratio:1:1

FORK LIFT/CHERRY PICKER *OPERATING ENGINEERS LOCAL 4*	06/01/2013	$40.34	$10.00	$13.55	$0.00	$63.89
	12/01/2013	$41.12	$10.00	$13.55	$0.00	$64.67
For apprentice rates see "Apprentice- OPERATING ENGINEERS"						
GENERATOR/LIGHTING PLANT/HEATERS *OPERATING ENGINEERS LOCAL 4*	06/01/2013	$28.19	$10.00	$13.55	$0.00	$51.74
	12/01/2013	$28.74	$10.00	$13.55	$0.00	$52.29
For apprentice rates see "Apprentice- OPERATING ENGINEERS"						
GLAZIER (GLASS PLANK/AIR BARRIER/INTERIOR SYSTEMS) *GLAZIERS LOCAL 35 (ZONE 2)*	01/01/2013	$35.51	$7.80	$14.60	$0.00	$57.91

Classification	Effective Date	Base Wage	Health	Pension	Supplemental Unemployment	Total Rate

Apprentice - *GLAZIER - Local 35 Zone 2*

Effective Date - 01/01/2013

Step	percent	Apprentice Base Wage	Health	Pension	Supplemental Unemployment	Total Rate
1	50	$17.76	$7.80	$0.00	$0.00	$25.56
2	55	$19.53	$7.80	$3.25	$0.00	$30.58
3	60	$21.31	$7.80	$3.54	$0.00	$32.65
4	65	$23.08	$7.80	$3.84	$0.00	$34.72
5	70	$24.86	$7.80	$12.83	$0.00	$45.49
6	75	$26.63	$7.80	$13.13	$0.00	$47.56
7	80	$28.41	$7.80	$13.42	$0.00	$49.63
8	90	$31.96	$7.80	$14.01	$0.00	$53.77

Notes:

Steps are 750 hrs.

Apprentice to Journeyworker Ratio:1:1

HOISTING ENGINEER/CRANES/GRADALLS *OPERATING ENGINEERS LOCAL 4*	06/01/2013	$40.34	$10.00	$13.55	$0.00	$63.89
	12/01/2013	$41.12	$10.00	$13.55	$0.00	$64.67

Classification	Effective Date	Base Wage	Health	Pension	Supplemental Unemployment	Total Rate

Apprentice - *OPERATING ENGINEERS - Local 4*

Effective Date - 06/01/2013

Step	percent	Apprentice Base Wage	Health	Pension	Supplemental Unemployment	Total Rate
1	55	$22.19	$10.00	$0.00	$0.00	$32.19
2	60	$24.20	$10.00	$13.55	$0.00	$47.75
3	65	$26.22	$10.00	$13.55	$0.00	$49.77
4	70	$28.24	$10.00	$13.55	$0.00	$51.79
5	75	$30.26	$10.00	$13.55	$0.00	$53.81
6	80	$32.27	$10.00	$13.55	$0.00	$55.82
7	85	$34.29	$10.00	$13.55	$0.00	$57.84
8	90	$36.31	$10.00	$13.55	$0.00	$59.86

Effective Date - 12/01/2013

Step	percent	Apprentice Base Wage	Health	Pension	Supplemental Unemployment	Total Rate
1	55	$22.62	$10.00	$0.00	$0.00	$32.62
2	60	$24.67	$10.00	$13.55	$0.00	$48.22
3	65	$26.73	$10.00	$13.55	$0.00	$50.28
4	70	$28.78	$10.00	$13.55	$0.00	$52.33
5	75	$30.84	$10.00	$13.55	$0.00	$54.39
6	80	$32.90	$10.00	$13.55	$0.00	$56.45
7	85	$34.95	$10.00	$13.55	$0.00	$58.50
8	90	$37.01	$10.00	$13.55	$0.00	$60.56

Notes:

Apprentice to Journeyworker Ratio:1:6

HVAC (DUCTWORK) *SHEETMETAL WORKERS LOCAL 17 - A*	02/01/2013	$42.32	$9.82	$18.24	$2.11	$72.49
For apprentice rates see "Apprentice- SHEET METAL WORKER"						
HVAC (ELECTRICAL CONTROLS) *ELECTRICIANS LOCAL 103*	03/01/2013	$43.52	$13.00	$14.16	$0.00	$70.68
	09/01/2013	$44.20	$13.00	$14.18	$0.00	$71.38
	03/01/2014	$44.92	$13.00	$14.20	$0.00	$72.12
	09/01/2014	$45.60	$13.00	$14.22	$0.00	$72.82
	03/01/2015	$46.32	$13.00	$14.24	$0.00	$73.56
	09/01/2015	$47.27	$13.00	$14.27	$0.00	$74.54
	03/01/2016	$48.23	$13.00	$14.30	$0.00	$75.53
For apprentice rates see "Apprentice- ELECTRICIAN"						
HVAC (TESTING AND BALANCING - AIR) *SHEETMETAL WORKERS LOCAL 17 - A*	02/01/2013	$42.32	$9.82	$18.24	$2.11	$72.49
For apprentice rates see "Apprentice- SHEET METAL WORKER"						
HVAC (TESTING AND BALANCING -WATER) *PIPEFITTERS LOCAL 537*	03/01/2013	$49.34	$8.75	$14.39	$0.00	$72.48
For apprentice rates see "Apprentice- PIPEFITTER" or "PLUMBER/PIPEFITTER"						
HVAC MECHANIC *PIPEFITTERS LOCAL 537*	03/01/2013	$49.34	$8.75	$14.39	$0.00	$72.48

Classification	Effective Date	Base Wage	Health	Pension	Supplemental Unemployment	Total Rate
For apprentice rates see "Apprentice- PIPEFITTER" or "PLUMBER/PIPEFITTER"						
HYDRAULIC DRILLS *LABORERS - ZONE 1*	06/01/2013	$33.80	$7.10	$12.45	$0.00	$53.35
	12/01/2013	$34.55	$7.10	$12.45	$0.00	$54.10
	06/01/2014	$35.30	$7.10	$12.45	$0.00	$54.85
	12/01/2014	$36.05	$7.10	$12.45	$0.00	$55.60
	06/01/2015	$36.80	$7.10	$12.45	$0.00	$56.35
	12/01/2015	$37.55	$7.10	$12.45	$0.00	$57.10
	06/01/2016	$38.30	$7.10	$12.45	$0.00	$57.85
	12/01/2016	$39.30	$7.10	$12.45	$0.00	$58.85
For apprentice rates see "Apprentice- LABORER"						
INSULATOR (PIPES & TANKS) *HEAT & FROST INSULATORS LOCAL 6 (BOSTON)*	09/01/2012	$41.46	$10.65	$11.50	$0.00	$63.61
	09/01/2013	$43.06	$10.65	$11.50	$0.00	$65.21
	09/01/2014	$45.06	$10.65	$11.50	$0.00	$67.21

Apprentice - *ASBESTOS INSULATOR (Pipes & Tanks) - Local 6 Boston*

Effective Date - 09/01/2012

Step	percent	Apprentice Base Wage	Health	Pension	Supplemental Unemployment	Total Rate
1	50	$20.73	$10.65	$8.60	$0.00	$39.98
2	60	$24.88	$10.65	$9.18	$0.00	$44.71
3	70	$29.02	$10.65	$9.76	$0.00	$49.43
4	80	$33.17	$10.65	$10.34	$0.00	$54.16

Effective Date - 09/01/2013

Step	percent	Apprentice Base Wage	Health	Pension	Supplemental Unemployment	Total Rate
1	50	$21.53	$10.65	$8.60	$0.00	$40.78
2	60	$25.84	$10.65	$9.18	$0.00	$45.67
3	70	$30.14	$10.65	$9.76	$0.00	$50.55
4	80	$34.45	$10.65	$10.34	$0.00	$55.44

Notes:

Steps are 1 year

Apprentice to Journeyworker Ratio:1:4

IRONWORKER/WELDER *IRONWORKERS LOCAL 7 (BOSTON AREA)*	03/16/2013	$40.23	$7.70	$18.35	$0.00	$66.28

Classification	Effective Date	Base Wage	Health	Pension	Supplemental Unemployment	Total Rate

Apprentice - *IRONWORKER - Local 7 Boston*

Effective Date - 03/16/2013

Step	percent	Apprentice Base Wage	Health	Pension	Supplemental Unemployment	Total Rate
1	60	$24.14	$7.70	$18.35	$0.00	$50.19
2	70	$28.16	$7.70	$18.35	$0.00	$54.21
3	75	$30.17	$7.70	$18.35	$0.00	$56.22
4	80	$32.18	$7.70	$18.35	$0.00	$58.23
5	85	$34.20	$7.70	$18.35	$0.00	$60.25
6	90	$36.21	$7.70	$18.35	$0.00	$62.26

Notes:

** Structural 1:6; Ornamental 1:4

Apprentice to Journeyworker Ratio:**

JACKHAMMER & PAVING BREAKER OPERATOR *LABORERS - ZONE 1*	06/01/2013	$33.30	$7.10	$12.45	$0.00	$52.85
	12/01/2013	$34.05	$7.10	$12.45	$0.00	$53.60
	06/01/2014	$34.80	$7.10	$12.45	$0.00	$54.35
	12/01/2014	$35.55	$7.10	$12.45	$0.00	$55.10
	06/01/2015	$36.30	$7.10	$12.45	$0.00	$55.85
	12/01/2015	$37.05	$7.10	$12.45	$0.00	$56.60
	06/01/2016	$37.80	$7.10	$12.45	$0.00	$57.35
	12/01/2016	$38.80	$7.10	$12.45	$0.00	$58.35

For apprentice rates see "Apprentice- LABORER"

LABORER *LABORERS - ZONE 1*	06/01/2013	$33.05	$7.10	$12.45	$0.00	$52.60
	12/01/2013	$33.80	$7.10	$12.45	$0.00	$53.35
	06/01/2014	$34.55	$7.10	$12.45	$0.00	$54.10
	12/01/2014	$35.30	$7.10	$12.45	$0.00	$54.85
	06/01/2015	$36.05	$7.10	$12.45	$0.00	$55.60
	12/01/2015	$36.80	$7.10	$12.45	$0.00	$56.35
	06/01/2016	$37.55	$7.10	$12.45	$0.00	$57.10
	12/01/2016	$38.55	$7.10	$12.45	$0.00	$58.10

Classification	Effective Date	Base Wage	Health	Pension	Supplemental Unemployment	Total Rate

Apprentice - *LABORER - Zone 1*

Effective Date - 06/01/2013

Step	percent	Apprentice Base Wage	Health	Pension	Supplemental Unemployment	Total Rate
1	60	$19.83	$7.10	$12.45	$0.00	$39.38
2	70	$23.14	$7.10	$12.45	$0.00	$42.69
3	80	$26.44	$7.10	$12.45	$0.00	$45.99
4	90	$29.75	$7.10	$12.45	$0.00	$49.30

Effective Date - 12/01/2013

Step	percent	Apprentice Base Wage	Health	Pension	Supplemental Unemployment	Total Rate
1	60	$20.28	$7.10	$12.45	$0.00	$39.83
2	70	$23.66	$7.10	$12.45	$0.00	$43.21
3	80	$27.04	$7.10	$12.45	$0.00	$46.59
4	90	$30.42	$7.10	$12.45	$0.00	$49.97

Notes:

Apprentice to Journeyworker Ratio:1:5

LABORER: CARPENTER TENDER *LABORERS - ZONE 1*	06/01/2013	$33.05	$7.10	$12.45	$0.00	$52.60
	12/01/2013	$33.80	$7.10	$12.45	$0.00	$53.35
	06/01/2014	$34.55	$7.10	$12.45	$0.00	$54.10
	12/01/2014	$35.30	$7.10	$12.45	$0.00	$54.85
	06/01/2015	$36.05	$7.10	$12.45	$0.00	$55.60
	12/01/2015	$36.80	$7.10	$12.45	$0.00	$56.35
	06/01/2016	$37.55	$7.10	$12.45	$0.00	$57.10
	12/01/2016	$38.55	$7.10	$12.45	$0.00	$58.10
For apprentice rates see "Apprentice- LABORER"						
LABORER: CEMENT FINISHER TENDER *LABORERS - ZONE 1*	06/01/2013	$33.05	$7.10	$12.45	$0.00	$52.60
	12/01/2013	$33.80	$7.10	$12.45	$0.00	$53.35
	06/01/2014	$34.55	$7.10	$12.45	$0.00	$54.10
	12/01/2014	$35.30	$7.10	$12.45	$0.00	$54.85
	06/01/2015	$36.05	$7.10	$12.45	$0.00	$55.60
	12/01/2015	$36.80	$7.10	$12.45	$0.00	$56.35
	06/01/2016	$37.55	$7.10	$12.45	$0.00	$57.10
	12/01/2016	$38.55	$7.10	$12.45	$0.00	$58.10
For apprentice rates see "Apprentice- LABORER"						
LABORER: HAZARDOUS WASTE/ASBESTOS REMOVER *LABORERS - ZONE 1*	12/01/2011	$31.80	$7.10	$12.45	$0.00	$51.35
For apprentice rates see "Apprentice- LABORER"						

Classification	Effective Date	Base Wage	Health	Pension	Supplemental Unemployment	Total Rate
LABORER: MASON TENDER *LABORERS - ZONE 1*	06/01/2013	$33.30	$7.10	$12.45	$0.00	$52.85
	12/01/2013	$34.05	$7.10	$12.45	$0.00	$53.60
	06/01/2014	$34.80	$7.10	$12.45	$0.00	$54.35
	12/01/2014	$35.55	$7.10	$12.45	$0.00	$55.10
	06/01/2015	$36.30	$7.10	$12.45	$0.00	$55.85
	12/01/2015	$37.05	$7.10	$12.45	$0.00	$56.60
	06/01/2016	$37.80	$7.10	$12.45	$0.00	$57.35
	12/01/2016	$38.80	$7.10	$12.45	$0.00	$58.35
For apprentice rates see "Apprentice- LABORER"						
LABORER: MULTI-TRADE TENDER *LABORERS - ZONE 1*	06/01/2013	$33.05	$7.10	$12.45	$0.00	$52.60
	12/01/2013	$33.80	$7.10	$12.45	$0.00	$53.35
	06/01/2014	$34.55	$7.10	$12.45	$0.00	$54.10
	12/01/2014	$35.30	$7.10	$12.45	$0.00	$54.85
	06/01/2015	$36.05	$7.10	$12.45	$0.00	$55.60
	12/01/2015	$36.80	$7.10	$12.45	$0.00	$56.35
	06/01/2016	$37.55	$7.10	$12.45	$0.00	$57.10
	12/01/2016	$38.55	$7.10	$12.45	$0.00	$58.10
For apprentice rates see "Apprentice- LABORER"						
LABORER: TREE REMOVER *LABORERS - ZONE 1*	06/01/2013	$33.05	$7.10	$12.45	$0.00	$52.60
	12/01/2013	$33.80	$7.10	$12.45	$0.00	$53.35
	06/01/2014	$34.55	$7.10	$12.45	$0.00	$54.10
	12/01/2014	$35.30	$7.10	$12.45	$0.00	$54.85
	06/01/2015	$36.05	$7.10	$12.45	$0.00	$55.60
	12/01/2015	$36.80	$7.10	$12.45	$0.00	$56.35
	06/01/2016	$37.55	$7.10	$12.45	$0.00	$57.10
	12/01/2016	$38.55	$7.10	$12.45	$0.00	$58.10
This classification applies to the wholesale removal of standing trees including all associated trimming of branches and limbs, and applies to the removal of branches at locations not on or around utility lines. For apprentice rates see "Apprentice- LABORER"						
LASER BEAM OPERATOR *LABORERS - ZONE 1*	06/01/2013	$33.30	$7.10	$12.45	$0.00	$52.85
	12/01/2013	$34.05	$7.10	$12.45	$0.00	$53.60
	06/01/2014	$34.80	$7.10	$12.45	$0.00	$54.35
	12/01/2014	$35.55	$7.10	$12.45	$0.00	$55.10
	06/01/2015	$36.30	$7.10	$12.45	$0.00	$55.85
	12/01/2015	$37.05	$7.10	$12.45	$0.00	$56.60
	06/01/2016	$37.80	$7.10	$12.45	$0.00	$57.35
	12/01/2016	$38.80	$7.10	$12.45	$0.00	$58.35
For apprentice rates see "Apprentice- LABORER"						
MARBLE & TILE FINISHERS *BRICKLAYERS LOCAL 3 - MARBLE & TILE*	02/01/2013	$36.20	$10.18	$16.51	$0.00	$62.89
	08/01/2013	$36.66	$10.18	$16.83	$0.00	$63.67
	02/01/2014	$37.11	$10.18	$16.83	$0.00	$64.12
	08/01/2014	$37.82	$10.18	$16.90	$0.00	$64.90
	02/01/2015	$38.27	$10.18	$16.90	$0.00	$65.35
	08/01/2015	$38.98	$10.18	$16.97	$0.00	$66.13
	02/01/2016	$39.43	$10.18	$16.97	$0.00	$66.58
	08/01/2016	$40.13	$10.18	$17.05	$0.00	$67.36
	02/01/2017	$40.59	$10.18	$17.05	$0.00	$67.82

Classification	Effective Date	Base Wage	Health	Pension	Supplemental Unemployment	Total Rate

Apprentice - *MARBLE & TILE FINISHER - Local 3 Marble & Tile*

Effective Date - 02/01/2013

Step	percent	Apprentice Base Wage	Health	Pension	Supplemental Unemployment	Total Rate
1	50	$18.10	$10.18	$16.51	$0.00	$44.79
2	60	$21.72	$10.18	$16.51	$0.00	$48.41
3	70	$25.34	$10.18	$16.51	$0.00	$52.03
4	80	$28.96	$10.18	$16.51	$0.00	$55.65
5	90	$32.58	$10.18	$16.51	$0.00	$59.27

Effective Date - 08/01/2013

Step	percent	Apprentice Base Wage	Health	Pension	Supplemental Unemployment	Total Rate
1	50	$18.33	$10.18	$16.83	$0.00	$45.34
2	60	$22.00	$10.18	$16.83	$0.00	$49.01
3	70	$25.66	$10.18	$16.83	$0.00	$52.67
4	80	$29.33	$10.18	$16.83	$0.00	$56.34
5	90	$32.99	$10.18	$16.83	$0.00	$60.00

Notes:

Apprentice to Journeyworker Ratio:1:3

MARBLE MASONS,TILELAYERS & TERRAZZO MECH *BRICKLAYERS LOCAL 3 - MARBLE & TILE*	02/01/2013	$47.45	$10.18	$17.83	$0.00	$75.46
	08/01/2013	$48.10	$10.18	$18.15	$0.00	$76.43
	02/01/2014	$48.66	$10.18	$18.15	$0.00	$76.99
	08/01/2014	$49.56	$10.18	$18.22	$0.00	$77.96
	02/01/2015	$50.12	$10.18	$18.22	$0.00	$78.52
	08/01/2015	$51.02	$10.18	$18.29	$0.00	$79.49
	02/01/2016	$51.59	$10.18	$18.29	$0.00	$80.06
	08/01/2016	$52.49	$10.18	$18.37	$0.00	$81.04
	02/01/2017	$53.06	$10.18	$18.37	$0.00	$81.61

Classification	Effective Date	Base Wage	Health	Pension	Supplemental Unemployment	Total Rate

Apprentice - *MARBLE-TILE-TERRAZZO MECHANIC - Local 3 Marble & Tile*

Effective Date - 02/01/2013

Step	percent	Apprentice Base Wage	Health	Pension	Supplemental Unemployment	Total Rate
1	50	$23.73	$10.18	$17.83	$0.00	$51.74
2	60	$28.47	$10.18	$17.83	$0.00	$56.48
3	70	$33.22	$10.18	$17.83	$0.00	$61.23
4	80	$37.96	$10.18	$17.83	$0.00	$65.97
5	90	$42.71	$10.18	$17.83	$0.00	$70.72

Effective Date - 08/01/2013

Step	percent	Apprentice Base Wage	Health	Pension	Supplemental Unemployment	Total Rate
1	50	$24.05	$10.18	$18.15	$0.00	$52.38
2	60	$28.86	$10.18	$18.15	$0.00	$57.19
3	70	$33.67	$10.18	$18.15	$0.00	$62.00
4	80	$38.48	$10.18	$18.15	$0.00	$66.81
5	90	$43.29	$10.18	$18.15	$0.00	$71.62

Notes:

Apprentice to Journeyworker Ratio:1:5

MECH. SWEEPER OPERATOR (ON CONST. SITES) *OPERATING ENGINEERS LOCAL 4*	06/01/2013	$39.96	$10.00	$13.55	$0.00	$63.51
	12/01/2013	$40.74	$10.00	$13.55	$0.00	$64.29
For apprentice rates see "Apprentice- OPERATING ENGINEERS"						
MECHANICS MAINTENANCE *OPERATING ENGINEERS LOCAL 4*	06/01/2013	$39.96	$10.00	$13.55	$0.00	$63.51
	12/01/2013	$40.74	$10.00	$13.55	$0.00	$64.29
For apprentice rates see "Apprentice- OPERATING ENGINEERS"						
MILLWRIGHT (Zone 1) *MILLWRIGHTS LOCAL 1121 - Zone 1*	04/01/2013	$34.68	$9.80	$15.76	$0.00	$60.24
	10/01/2013	$35.45	$9.80	$15.76	$0.00	$61.01
	04/01/2014	$36.23	$9.80	$15.76	$0.00	$61.79
	10/01/2014	$37.18	$9.80	$15.76	$0.00	$62.74
	04/01/2015	$38.14	$9.80	$15.76	$0.00	$63.70

Classification	Effective Date	Base Wage	Health	Pension	Supplemental Unemployment	Total Rate

Apprentice - *MILLWRIGHT - Local 1121 Zone 1*

Effective Date - 04/01/2013

Step	percent	Apprentice Base Wage	Health	Pension	Supplemental Unemployment	Total Rate
1	55	$19.07	$9.80	$4.32	$0.00	$33.19
2	65	$22.54	$9.80	$13.01	$0.00	$45.35
3	75	$26.01	$9.80	$13.80	$0.00	$49.61
4	85	$29.48	$9.80	$14.58	$0.00	$53.86

Effective Date - 10/01/2013

Step	percent	Apprentice Base Wage	Health	Pension	Supplemental Unemployment	Total Rate
1	55	$19.50	$9.80	$4.32	$0.00	$33.62
2	65	$23.04	$9.80	$13.01	$0.00	$45.85
3	75	$26.59	$9.80	$13.80	$0.00	$50.19
4	85	$30.13	$9.80	$14.58	$0.00	$54.51

Notes:

Steps are 2,000 hours

Apprentice to Journeyworker Ratio:1:5

MORTAR MIXER *LABORERS - ZONE 1*	06/01/2013	$33.30	$7.10	$12.45	$0.00	$52.85
	12/01/2013	$34.05	$7.10	$12.45	$0.00	$53.60
	06/01/2014	$34.80	$7.10	$12.45	$0.00	$54.35
	12/01/2014	$35.55	$7.10	$12.45	$0.00	$55.10
	06/01/2015	$36.30	$7.10	$12.45	$0.00	$55.85
	12/01/2015	$37.05	$7.10	$12.45	$0.00	$56.60
	06/01/2016	$37.80	$7.10	$12.45	$0.00	$57.35
	12/01/2016	$38.80	$7.10	$12.45	$0.00	$58.35
For apprentice rates see "Apprentice- LABORER"						
OILER (OTHER THAN TRUCK CRANES,GRADALLS) *OPERATING ENGINEERS LOCAL 4*	06/01/2013	$21.17	$10.00	$13.55	$0.00	$44.72
	12/01/2013	$21.59	$10.00	$13.55	$0.00	$45.14
For apprentice rates see "Apprentice- OPERATING ENGINEERS"						
OILER (TRUCK CRANES, GRADALLS) *OPERATING ENGINEERS LOCAL 4*	06/01/2013	$24.57	$10.00	$13.55	$0.00	$48.12
	12/01/2013	$25.06	$10.00	$13.55	$0.00	$48.61
For apprentice rates see "Apprentice- OPERATING ENGINEERS"						
OTHER POWER DRIVEN EQUIPMENT - CLASS II *OPERATING ENGINEERS LOCAL 4*	06/01/2013	$39.96	$10.00	$13.55	$0.00	$63.51
	12/01/2013	$40.74	$10.00	$13.55	$0.00	$64.29
For apprentice rates see "Apprentice- OPERATING ENGINEERS"						
PAINTER (BRIDGES/TANKS) *PAINTERS LOCAL 35 - ZONE 2*	01/01/2013	$45.01	$7.80	$15.60	$0.00	$68.41

Classification	Effective Date	Base Wage	Health	Pension	Supplemental Unemployment	Total Rate

Apprentice - *PAINTER Local 35 - BRIDGES/TANKS*

Effective Date - 01/01/2013

Step	percent	Apprentice Base Wage	Health	Pension	Supplemental Unemployment	Total Rate
1	50	$22.51	$7.80	$0.00	$0.00	$30.31
2	55	$24.76	$7.80	$3.52	$0.00	$36.08
3	60	$27.01	$7.80	$3.84	$0.00	$38.65
4	65	$29.26	$7.80	$4.16	$0.00	$41.22
5	70	$31.51	$7.80	$13.68	$0.00	$52.99
6	75	$33.76	$7.80	$14.00	$0.00	$55.56
7	80	$36.01	$7.80	$14.32	$0.00	$58.13
8	90	$40.51	$7.80	$14.96	$0.00	$63.27

Notes:

Steps are 750 hrs.

Apprentice to Journeyworker Ratio:1:1

PAINTER (SPRAY OR SANDBLAST, NEW) *	01/01/2013	$35.91	$7.80	$15.60	$0.00	$59.31

* If 30% or more of surfaces to be painted are new construction, NEW paint rate shall be used.*PAINTERS LOCAL 35 - ZONE 2*

Apprentice - *PAINTER Local 35 Zone 2 - Spray/Sandblast - New*

Effective Date - 01/01/2013

Step	percent	Apprentice Base Wage	Health	Pension	Supplemental Unemployment	Total Rate
1	50	$17.96	$7.80	$0.00	$0.00	$25.76
2	55	$19.75	$7.80	$3.52	$0.00	$31.07
3	60	$21.55	$7.80	$3.84	$0.00	$33.19
4	65	$23.34	$7.80	$4.16	$0.00	$35.30
5	70	$25.14	$7.80	$13.68	$0.00	$46.62
6	75	$26.93	$7.80	$14.00	$0.00	$48.73
7	80	$28.73	$7.80	$14.32	$0.00	$50.85
8	90	$32.32	$7.80	$14.96	$0.00	$55.08

Notes:

Apprentice to Journeyworker Ratio:1:1

PAINTER (SPRAY OR SANDBLAST, REPAINT) *PAINTERS LOCAL 35 - ZONE 2*	01/01/2013	$33.97	$7.80	$15.60	$0.00	$57.37

Classification	Effective Date	Base Wage	Health	Pension	Supplemental Unemployment	Total Rate

Apprentice - *PAINTER Local 35 Zone 2 - Spray/Sandblast - Repaint*

Effective Date - 01/01/2013

Step	percent	Apprentice Base Wage	Health	Pension	Supplemental Unemployment	Total Rate
1	50	$16.99	$7.80	$0.00	$0.00	$24.79
2	55	$18.68	$7.80	$3.52	$0.00	$30.00
3	60	$20.38	$7.80	$3.84	$0.00	$32.02
4	65	$22.08	$7.80	$4.16	$0.00	$34.04
5	70	$23.78	$7.80	$13.68	$0.00	$45.26
6	75	$25.48	$7.80	$14.00	$0.00	$47.28
7	80	$27.18	$7.80	$14.32	$0.00	$49.30
8	90	$30.57	$7.80	$14.96	$0.00	$53.33

Notes:

Apprentice to Journeyworker Ratio:1:1

PAINTER (TRAFFIC MARKINGS) *LABORERS - ZONE 1*	06/01/2013	$33.05	$7.10	$12.45	$0.00	$52.60
	12/01/2013	$33.80	$7.10	$12.45	$0.00	$53.35
	06/01/2014	$34.55	$7.10	$12.45	$0.00	$54.10
	12/01/2014	$35.30	$7.10	$12.45	$0.00	$54.85
	06/01/2015	$36.05	$7.10	$12.45	$0.00	$55.60
	12/01/2015	$36.80	$7.10	$12.45	$0.00	$56.35
	06/01/2016	$37.55	$7.10	$12.45	$0.00	$57.10
	12/01/2016	$38.55	$7.10	$12.45	$0.00	$58.10
For Apprentice rates see "Apprentice- LABORER"						
PAINTER / TAPER (BRUSH, NEW) * * If 30% or more of surfaces to be painted are new construction, NEW paint rate shall be used.*PAINTERS LOCAL 35 - ZONE 2*	01/01/2013	$34.51	$7.80	$15.60	$0.00	$57.91

Apprentice - *PAINTER - Local 35 Zone 2 - BRUSH NEW*

Effective Date - 01/01/2013

Step	percent	Apprentice Base Wage	Health	Pension	Supplemental Unemployment	Total Rate
1	50	$17.26	$7.80	$0.00	$0.00	$25.06
2	55	$18.98	$7.80	$3.52	$0.00	$30.30
3	60	$20.71	$7.80	$3.84	$0.00	$32.35
4	65	$22.43	$7.80	$4.16	$0.00	$34.39
5	70	$24.16	$7.80	$13.68	$0.00	$45.64
6	75	$25.88	$7.80	$14.00	$0.00	$47.68
7	80	$27.61	$7.80	$14.32	$0.00	$49.73
8	90	$31.06	$7.80	$14.96	$0.00	$53.82

Notes:

Steps are 750 hrs.

Apprentice to Journeyworker Ratio:1:1

Classification	Effective Date	Base Wage	Health	Pension	Supplemental Unemployment	Total Rate
PAINTER / TAPER (BRUSH, REPAINT) *PAINTERS LOCAL 35 - ZONE 2*	01/01/2013	$32.57	$7.80	$15.60	$0.00	$55.97

Apprentice - *PAINTER Local 35 Zone 2 - BRUSH REPAINT*

Effective Date - 01/01/2013

Step	percent	Apprentice Base Wage	Health	Pension	Supplemental Unemployment	Total Rate
1	50	$16.29	$7.80	$0.00	$0.00	$24.09
2	55	$17.91	$7.80	$3.52	$0.00	$29.23
3	60	$19.54	$7.80	$3.84	$0.00	$31.18
4	65	$21.17	$7.80	$4.16	$0.00	$33.13
5	70	$22.80	$7.80	$13.68	$0.00	$44.28
6	75	$24.43	$7.80	$14.00	$0.00	$46.23
7	80	$26.06	$7.80	$14.32	$0.00	$48.18
8	90	$29.31	$7.80	$14.96	$0.00	$52.07

Notes:

Steps are 750 hrs.

Apprentice to Journeyworker Ratio:1:1

PANEL & PICKUP TRUCKS DRIVER *TEAMSTERS JOINT COUNCIL NO. 10 ZONE A*	12/01/2012	$31.38	$8.91	$8.00	$0.00	$48.29
PIER AND DOCK CONSTRUCTOR (UNDERPINNING AND DECK) *PILE DRIVER LOCAL 56 (ZONE 1)*	08/01/2012	$39.20	$9.80	$17.67	$0.00	$66.67
	08/01/2013	$40.70	$9.80	$17.67	$0.00	$68.17
	08/01/2014	$42.20	$9.80	$17.67	$0.00	$69.67
	08/01/2015	$43.70	$9.80	$17.67	$0.00	$71.17
PILE DRIVER *PILE DRIVER LOCAL 56 (ZONE 1)*	08/01/2012	$39.20	$9.80	$17.67	$0.00	$66.67
	08/01/2013	$40.70	$9.80	$17.67	$0.00	$68.17
	08/01/2014	$42.20	$9.80	$17.67	$0.00	$69.67
	08/01/2015	$43.70	$9.80	$17.67	$0.00	$71.17

Classification	Effective Date	Base Wage	Health	Pension	Supplemental Unemployment	Total Rate

Apprentice - *PILE DRIVER - Local 56 Zone 1*

Effective Date - 08/01/2012

Step	percent	Apprentice Base Wage	Health	Pension	Supplemental Unemployment	Total Rate
1	50	$19.60	$9.80	$17.67	$0.00	$47.07
2	60	$23.52	$9.80	$17.67	$0.00	$50.99
3	70	$27.44	$9.80	$17.67	$0.00	$54.91
4	75	$29.40	$9.80	$17.67	$0.00	$56.87
5	80	$31.36	$9.80	$17.67	$0.00	$58.83
6	80	$31.36	$9.80	$17.67	$0.00	$58.83
7	90	$35.28	$9.80	$17.67	$0.00	$62.75
8	90	$35.28	$9.80	$17.67	$0.00	$62.75

Effective Date - 08/01/2013

Step	percent	Apprentice Base Wage	Health	Pension	Supplemental Unemployment	Total Rate
1	50	$20.35	$9.80	$17.67	$0.00	$47.82
2	60	$24.42	$9.80	$17.67	$0.00	$51.89
3	70	$28.49	$9.80	$17.67	$0.00	$55.96
4	75	$30.53	$9.80	$17.67	$0.00	$58.00
5	80	$32.56	$9.80	$17.67	$0.00	$60.03
6	80	$32.56	$9.80	$17.67	$0.00	$60.03
7	90	$36.63	$9.80	$17.67	$0.00	$64.10
8	90	$36.63	$9.80	$17.67	$0.00	$64.10

Notes:

Apprentice to Journeyworker Ratio:1:3

PIPEFITTER & STEAMFITTER *PIPEFITTERS LOCAL 537*	03/01/2013	$49.34	$8.75	$14.39	$0.00	$72.48

Apprentice - *PIPEFITTER - Local 537*

Effective Date - 03/01/2013

Step	percent	Apprentice Base Wage	Health	Pension	Supplemental Unemployment	Total Rate
1	40	$19.74	$8.75	$6.50	$0.00	$34.99
2	45	$22.20	$8.75	$14.39	$0.00	$45.34
3	60	$29.60	$8.75	$14.39	$0.00	$52.74
4	70	$34.54	$8.75	$14.39	$0.00	$57.68
5	80	$39.47	$8.75	$14.39	$0.00	$62.61

Notes:

** 1:3; 3:15; 1:10 thereafter / Steps are 1 yr.

Refrig/AC Mechanic **1:1;1:2;2:4;3:6;4:8;5:10;6:12;7:14;8:17;9:20;10:23(Max)

Apprentice to Journeyworker Ratio:**

Classification	Effective Date	Base Wage	Health	Pension	Supplemental Unemployment	Total Rate
PIPELAYER *LABORERS - ZONE 1*	06/01/2013	$33.30	$7.10	$12.45	$0.00	$52.85
	12/01/2013	$34.05	$7.10	$12.45	$0.00	$53.60
	06/01/2014	$34.80	$7.10	$12.45	$0.00	$54.35
	12/01/2014	$35.55	$7.10	$12.45	$0.00	$55.10
	06/01/2015	$36.30	$7.10	$12.45	$0.00	$55.85
	12/01/2015	$37.05	$7.10	$12.45	$0.00	$56.60
	06/01/2016	$37.80	$7.10	$12.45	$0.00	$57.35
	12/01/2016	$38.80	$7.10	$12.45	$0.00	$58.35
For apprentice rates see "Apprentice- LABORER"						
PLUMBERS & GASFITTERS *PLUMBERS & GASFITTERS LOCAL 12*	03/01/2013	$49.31	$9.32	$13.29	$0.00	$71.92

Apprentice - *PLUMBER/GASFITTER - Local 12*

Effective Date - 03/01/2013

Step	percent	Apprentice Base Wage	Health	Pension	Supplemental Unemployment	Total Rate
1	35	$17.26	$9.32	$4.97	$0.00	$31.55
2	40	$19.72	$9.32	$5.61	$0.00	$34.65
3	55	$27.12	$9.32	$7.53	$0.00	$43.97
4	65	$32.05	$9.32	$8.81	$0.00	$50.18
5	75	$36.98	$9.32	$10.09	$0.00	$56.39

Notes:

** 1:2; 2:6; 3:10; 4:14; 5:19/Steps are 1 yr
Step4 with lic$53.29 Step5 with lic$59.49

Apprentice to Journeyworker Ratio:**

PNEUMATIC CONTROLS (TEMP.) *PIPEFITTERS LOCAL 537*	03/01/2013	$49.34	$8.75	$14.39	$0.00	$72.48
For apprentice rates see "Apprentice- PIPEFITTER" or "PLUMBER/PIPEFITTER"						
PNEUMATIC DRILL/TOOL OPERATOR *LABORERS - ZONE 1*	06/01/2013	$33.30	$7.10	$12.45	$0.00	$52.85
	12/01/2013	$34.05	$7.10	$12.45	$0.00	$53.60
	06/01/2014	$34.80	$7.10	$12.45	$0.00	$54.35
	12/01/2014	$35.55	$7.10	$12.45	$0.00	$55.10
	06/01/2015	$36.30	$7.10	$12.45	$0.00	$55.85
	12/01/2015	$37.05	$7.10	$12.45	$0.00	$56.60
	06/01/2016	$37.80	$7.10	$12.45	$0.00	$57.35
	12/01/2016	$38.80	$7.10	$12.45	$0.00	$58.35
For apprentice rates see "Apprentice- LABORER"						
POWDERMAN & BLASTER *LABORERS - ZONE 1*	06/01/2013	$34.05	$7.10	$12.45	$0.00	$53.60
	12/01/2013	$34.80	$7.10	$12.45	$0.00	$54.35
	06/01/2014	$35.55	$7.10	$12.45	$0.00	$55.10
	12/01/2014	$36.30	$7.10	$12.45	$0.00	$55.85
	06/01/2015	$37.05	$7.10	$12.45	$0.00	$56.60
	12/01/2015	$37.80	$7.10	$12.45	$0.00	$57.35
	06/01/2016	$38.55	$7.10	$12.45	$0.00	$58.10
	12/01/2016	$39.55	$7.10	$12.45	$0.00	$59.10
For apprentice rates see "Apprentice- LABORER"						

Classification	Effective Date	Base Wage	Health	Pension	Supplemental Unemployment	Total Rate
POWER SHOVEL/DERRICK/TRENCHING MACHINE *OPERATING ENGINEERS LOCAL 4*	06/01/2013	$40.34	$10.00	$13.55	$0.00	$63.89
	12/01/2013	$41.12	$10.00	$13.55	$0.00	$64.67
For apprentice rates see "Apprentice- OPERATING ENGINEERS"						
PUMP OPERATOR (CONCRETE) *OPERATING ENGINEERS LOCAL 4*	06/01/2013	$40.34	$10.00	$13.55	$0.00	$63.89
	12/01/2013	$41.12	$10.00	$13.55	$0.00	$64.67
For apprentice rates see "Apprentice- OPERATING ENGINEERS"						
PUMP OPERATOR (DEWATERING, OTHER) *OPERATING ENGINEERS LOCAL 4*	06/01/2013	$28.19	$10.00	$13.55	$0.00	$51.74
	12/01/2013	$28.74	$10.00	$13.55	$0.00	$52.29
For apprentice rates see "Apprentice- OPERATING ENGINEERS"						
READY-MIX CONCRETE DRIVER *TEAMSTERS LOCAL 25b*	05/01/2011	$28.03	$7.75	$5.91	$0.00	$41.69
RECLAIMERS *OPERATING ENGINEERS LOCAL 4*	06/01/2013	$39.96	$10.00	$13.55	$0.00	$63.51
	12/01/2013	$40.74	$10.00	$13.55	$0.00	$64.29
For apprentice rates see "Apprentice- OPERATING ENGINEERS"						
RESIDENTIAL WOOD FRAME (All Other Work) *CARPENTERS -ZONE 2 (Residential Wood)*	04/01/2011	$24.24	$8.67	$15.51	$0.00	$48.42
RESIDENTIAL WOOD FRAME CARPENTER ** ** The Residential Wood Frame Carpenter classification applies only to the construction of new, wood frame residences that do not exceed four stories including the basement. *CARPENTERS -ZONE 2 (Residential Wood)*	05/01/2011	$24.24	$6.34	$6.23	$0.00	$36.81
As of 9/1/09 Carpentry work on wood-frame residential WEATHERIZATION projects shall be paid the RESIDENTIAL WOOD FRAME CARPENTER rate.						
RIDE-ON MOTORIZED BUGGY OPERATOR *LABORERS - ZONE 1*	06/01/2013	$33.30	$7.10	$12.45	$0.00	$52.85
	12/01/2013	$34.05	$7.10	$12.45	$0.00	$53.60
	06/01/2014	$34.80	$7.10	$12.45	$0.00	$54.35
	12/01/2014	$35.55	$7.10	$12.45	$0.00	$55.10
	06/01/2015	$36.30	$7.10	$12.45	$0.00	$55.85
	12/01/2015	$37.05	$7.10	$12.45	$0.00	$56.60
	06/01/2016	$37.80	$7.10	$12.45	$0.00	$57.35
	12/01/2016	$38.80	$7.10	$12.45	$0.00	$58.35
For apprentice rates see "Apprentice- LABORER"						
ROLLER/SPREADER/MULCHING MACHINE *OPERATING ENGINEERS LOCAL 4*	06/01/2013	$39.96	$10.00	$13.55	$0.00	$63.51
	12/01/2013	$40.74	$10.00	$13.55	$0.00	$64.29
For apprentice rates see "Apprentice- OPERATING ENGINEERS"						
ROOFER (Inc.Roofer Waterproofng &Roofer Damproofg) *ROOFERS LOCAL 33*	02/01/2013	$37.41	$10.50	$10.70	$0.00	$58.61

Classification	Effective Date	Base Wage	Health	Pension	Supplemental Unemployment	Total Rate

Apprentice - *ROOFER - Local 33*
Effective Date - 02/01/2013

Step	percent	Apprentice Base Wage	Health	Pension	Supplemental Unemployment	Total Rate
1	50	$18.71	$10.50	$3.38	$0.00	$32.59
2	60	$22.45	$10.50	$10.70	$0.00	$43.65
3	65	$24.32	$10.50	$10.70	$0.00	$45.52
4	75	$28.06	$10.50	$10.70	$0.00	$49.26
5	85	$31.80	$10.50	$10.70	$0.00	$53.00

Notes: ** 1:5, 2:6-10, the 1:10; Reroofing: 1:4, then 1:1
Step 1 is 2000 hrs.; Steps 2-5 are 1000 hrs.

Apprentice to Journeyworker Ratio:**

ROOFER SLATE / TILE / PRECAST CONCRETE *ROOFERS LOCAL 33*	02/01/2013	$37.66	$10.50	$10.70	$0.00	$58.86

For apprentice rates see "Apprentice- ROOFER"

SHEETMETAL WORKER *SHEETMETAL WORKERS LOCAL 17 - A*	02/01/2013	$42.32	$9.82	$18.24	$2.11	$72.49

Apprentice - *SHEET METAL WORKER - Local 17-A*
Effective Date - 02/01/2013

Step	percent	Apprentice Base Wage	Health	Pension	Supplemental Unemployment	Total Rate
1	40	$16.93	$9.82	$4.00	$0.00	$30.75
2	40	$16.93	$9.82	$4.00	$0.00	$30.75
3	45	$19.04	$9.82	$8.00	$1.11	$37.97
4	45	$19.04	$9.82	$8.00	$1.11	$37.97
5	50	$21.16	$9.82	$8.75	$1.19	$40.92
6	50	$21.16	$9.82	$9.00	$1.20	$41.18
7	60	$25.39	$9.82	$10.24	$1.36	$46.81
8	65	$27.51	$9.82	$10.99	$1.45	$49.77
9	75	$31.74	$9.82	$12.49	$1.62	$55.67
10	85	$35.97	$9.82	$13.49	$1.78	$61.06

Notes:
Steps are 6 mos.

Apprentice to Journeyworker Ratio:1:4

SIGN ERECTOR *PAINTERS LOCAL 35 - ZONE 2*	06/01/2013	$25.81	$7.07	$7.05	$0.00	$39.93

Classification	Effective Date	Base Wage	Health	Pension	Supplemental Unemployment	Total Rate

Apprentice - *SIGN ERECTOR - Local 35 Zone 2*

Effective Date - 06/01/2013

Step	percent	Apprentice Base Wage	Health	Pension	Supplemental Unemployment	Total Rate
1	50	$12.91	$7.07	$0.00	$0.00	$19.98
2	55	$14.20	$7.07	$2.45	$0.00	$23.72
3	60	$15.49	$7.07	$2.45	$0.00	$25.01
4	65	$16.78	$7.07	$2.45	$0.00	$26.30
5	70	$18.07	$7.07	$7.05	$0.00	$32.19
6	75	$19.36	$7.07	$7.05	$0.00	$33.48
7	80	$20.65	$7.07	$7.05	$0.00	$34.77
8	85	$21.94	$7.07	$7.05	$0.00	$36.06
9	90	$23.23	$7.07	$7.05	$0.00	$37.35

Notes:

Steps are 4 mos.

Apprentice to Journeyworker Ratio:1:1

SPECIALIZED EARTH MOVING EQUIP < 35 TONS *TEAMSTERS JOINT COUNCIL NO. 10 ZONE A*	12/01/2012	$31.84	$8.91	$8.00	$0.00	$48.75
SPECIALIZED EARTH MOVING EQUIP > 35 TONS *TEAMSTERS JOINT COUNCIL NO. 10 ZONE A*	12/01/2012	$32.13	$8.91	$8.00	$0.00	$49.04
SPRINKLER FITTER *SPRINKLER FITTERS LOCAL 550 - (Section A)*	03/01/2013	$52.58	$8.42	$12.60	$0.00	$73.60

Apprentice - *SPRINKLER FITTER - Local 550*

Effective Date - 03/01/2013

Step	percent	Apprentice Base Wage	Health	Pension	Supplemental Unemployment	Total Rate
1	35	$18.40	$8.42	$8.00	$0.00	$34.82
2	40	$21.03	$8.42	$8.00	$0.00	$37.45
3	45	$23.66	$8.42	$8.00	$0.00	$40.08
4	50	$26.29	$8.42	$8.00	$0.00	$42.71
5	55	$28.92	$8.42	$8.00	$0.00	$45.34
6	60	$31.55	$8.42	$8.00	$0.00	$47.97
7	65	$34.18	$8.42	$8.00	$0.00	$50.60
8	70	$36.81	$8.42	$8.00	$0.00	$53.23
9	75	$39.44	$8.42	$8.00	$0.00	$55.86
10	80	$42.06	$8.42	$8.00	$0.00	$58.48

Notes:

Steps are 850 hours

Apprentice to Journeyworker Ratio:1:1

STEAM BOILER OPERATOR *OPERATING ENGINEERS LOCAL 4*	06/01/2013	$39.96	$10.00	$13.55	$0.00	$63.51
	12/01/2013	$40.74	$10.00	$13.55	$0.00	$64.29

For apprentice rates see "Apprentice- OPERATING ENGINEERS"

Classification	Effective Date	Base Wage	Health	Pension	Supplemental Unemployment	Total Rate
TAMPERS, SELF-PROPELLED OR TRACTOR DRAWN *OPERATING ENGINEERS LOCAL 4*	06/01/2013	$39.96	$10.00	$13.55	$0.00	$63.51
	12/01/2013	$40.74	$10.00	$13.55	$0.00	$64.29
For apprentice rates see "Apprentice- OPERATING ENGINEERS"						
TELECOMMUNICATION TECHNICIAN *ELECTRICIANS LOCAL 103*	03/01/2013	$32.64	$13.00	$12.51	$0.00	$58.15
	09/01/2013	$33.15	$13.00	$12.52	$0.00	$58.67
	03/01/2014	$33.69	$13.00	$12.54	$0.00	$59.23
	09/01/2014	$34.20	$13.00	$12.56	$0.00	$59.76
	03/01/2015	$34.74	$13.00	$12.57	$0.00	$60.31
	09/01/2015	$35.45	$13.00	$12.59	$0.00	$61.04
	03/01/2016	$36.17	$13.00	$12.62	$0.00	$61.79

Apprentice - *TELECOMMUNICATION TECHNICIAN - Local 103*

Effective Date - 03/01/2013

Step	percent	Apprentice Base Wage	Health	Pension	Supplemental Unemployment	Total Rate
1	40	$13.06	$13.00	$0.39	$0.00	$26.45
2	40	$13.06	$13.00	$0.39	$0.00	$26.45
3	45	$14.69	$13.00	$10.77	$0.00	$38.46
4	45	$14.69	$13.00	$10.77	$0.00	$38.46
5	50	$16.32	$13.00	$11.02	$0.00	$40.34
6	55	$17.95	$13.00	$11.27	$0.00	$42.22
7	60	$19.58	$13.00	$11.52	$0.00	$44.10
8	65	$21.22	$13.00	$11.77	$0.00	$45.99
9	70	$22.85	$13.00	$12.02	$0.00	$47.87
10	75	$24.48	$13.00	$12.26	$0.00	$49.74

Effective Date - 09/01/2013

Step	percent	Apprentice Base Wage	Health	Pension	Supplemental Unemployment	Total Rate
1	40	$13.26	$13.00	$0.40	$0.00	$26.66
2	40	$13.26	$13.00	$0.40	$0.00	$26.66
3	45	$14.92	$13.00	$9.79	$0.00	$37.71
4	45	$14.92	$13.00	$9.79	$0.00	$37.71
5	50	$16.58	$13.00	$10.04	$0.00	$39.62
6	55	$18.23	$13.00	$10.29	$0.00	$41.52
7	60	$19.89	$13.00	$10.54	$0.00	$43.43
8	65	$21.55	$13.00	$10.79	$0.00	$45.34
9	70	$23.21	$13.00	$11.04	$0.00	$47.25
10	75	$24.86	$13.00	$11.29	$0.00	$49.15

Notes:

Apprentice to Journeyworker Ratio:1:1

Classification	Effective Date	Base Wage	Health	Pension	Supplemental Unemployment	Total Rate
TERRAZZO FINISHERS *BRICKLAYERS LOCAL 3 - MARBLE & TILE*	02/01/2013	$46.35	$10.18	$17.83	$0.00	$74.36
	08/01/2013	$47.00	$10.18	$18.15	$0.00	$75.33
	02/01/2014	$47.56	$10.18	$18.15	$0.00	$75.89
	08/01/2014	$48.46	$10.18	$18.22	$0.00	$76.86
	02/01/2015	$49.02	$10.18	$18.22	$0.00	$77.42
	08/01/2015	$49.92	$10.18	$18.29	$0.00	$78.39
	02/01/2016	$50.49	$10.18	$18.29	$0.00	$78.96
	08/01/2016	$51.39	$10.18	$18.37	$0.00	$79.94
	02/01/2017	$51.96	$10.18	$18.37	$0.00	$80.51

Apprentice - *TERRAZZO FINISHER - Local 3 Marble & Tile*

Effective Date - 02/01/2013

Step	percent	Apprentice Base Wage	Health	Pension	Supplemental Unemployment	Total Rate
1	50	$23.18	$10.18	$17.83	$0.00	$51.19
2	60	$27.81	$10.18	$17.83	$0.00	$55.82
3	70	$32.45	$10.18	$17.83	$0.00	$60.46
4	80	$37.08	$10.18	$17.83	$0.00	$65.09
5	90	$41.72	$10.18	$17.83	$0.00	$69.73

Effective Date - 08/01/2013

Step	percent	Apprentice Base Wage	Health	Pension	Supplemental Unemployment	Total Rate
1	50	$23.50	$10.18	$18.15	$0.00	$51.83
2	60	$28.20	$10.18	$18.15	$0.00	$56.53
3	70	$32.90	$10.18	$18.15	$0.00	$61.23
4	80	$37.60	$10.18	$18.15	$0.00	$65.93
5	90	$42.30	$10.18	$18.15	$0.00	$70.63

Notes:

Apprentice to Journeyworker Ratio:1:3

TEST BORING DRILLER *LABORERS - FOUNDATION AND MARINE*	06/01/2013	$34.45	$7.10	$12.60	$0.00	$54.15
	12/01/2013	$35.20	$7.10	$12.60	$0.00	$54.90
	06/01/2014	$35.95	$7.10	$12.60	$0.00	$55.65
	12/01/2014	$36.70	$7.10	$12.60	$0.00	$56.40
	06/01/2015	$37.45	$7.10	$12.60	$0.00	$57.15
	12/01/2015	$38.20	$7.10	$12.60	$0.00	$57.90
	06/01/2016	$38.95	$7.10	$12.60	$0.00	$58.65
	12/01/2016	$39.95	$7.10	$12.60	$0.00	$59.65

For apprentice rates see "Apprentice- LABORER"

Classification	Effective Date	Base Wage	Health	Pension	Supplemental Unemployment	Total Rate
TEST BORING DRILLER HELPER *LABORERS - FOUNDATION AND MARINE*	06/01/2013	$33.17	$7.10	$12.60	$0.00	$52.87
	12/01/2013	$33.92	$7.10	$12.60	$0.00	$53.62
	06/01/2014	$34.67	$7.10	$12.60	$0.00	$54.37
	12/01/2014	$35.42	$7.10	$12.60	$0.00	$55.12
	06/01/2015	$36.17	$7.10	$12.60	$0.00	$55.87
	12/01/2015	$36.92	$7.10	$12.60	$0.00	$56.62
	06/01/2016	$37.67	$7.10	$12.60	$0.00	$57.37
	12/01/2016	$38.67	$7.10	$12.60	$0.00	$58.37
For apprentice rates see "Apprentice- LABORER"						
TEST BORING LABORER *LABORERS - FOUNDATION AND MARINE*	06/01/2013	$33.05	$7.10	$12.60	$0.00	$52.75
	12/01/2013	$33.80	$7.10	$12.60	$0.00	$53.50
	06/01/2014	$34.55	$7.10	$12.60	$0.00	$54.25
	12/01/2014	$35.30	$7.10	$12.60	$0.00	$55.00
	06/01/2015	$36.05	$7.10	$12.60	$0.00	$55.75
	12/01/2015	$36.80	$7.10	$12.60	$0.00	$56.50
	06/01/2016	$37.55	$7.10	$12.60	$0.00	$57.25
	12/01/2016	$38.55	$7.10	$12.60	$0.00	$58.25
For apprentice rates see "Apprentice- LABORER"						
TRACTORS/PORTABLE STEAM GENERATORS *OPERATING ENGINEERS LOCAL 4*	06/01/2013	$39.96	$10.00	$13.55	$0.00	$63.51
	12/01/2013	$40.74	$10.00	$13.55	$0.00	$64.29
For apprentice rates see "Apprentice- OPERATING ENGINEERS"						
TRAILERS FOR EARTH MOVING EQUIPMENT *TEAMSTERS JOINT COUNCIL NO. 10 ZONE A*	12/01/2012	$32.42	$9.07	$8.00	$0.00	$49.49
TUNNEL WORK - COMPRESSED AIR *LABORERS (COMPRESSED AIR)*	06/01/2013	$45.33	$7.10	$13.00	$0.00	$65.43
	12/01/2013	$46.08	$7.10	$13.00	$0.00	$66.18
	06/01/2014	$46.83	$7.10	$13.00	$0.00	$66.93
	12/01/2014	$47.58	$7.10	$13.00	$0.00	$67.68
	06/01/2015	$48.33	$7.10	$13.00	$0.00	$68.43
	12/01/2015	$49.08	$7.10	$13.00	$0.00	$69.18
	06/01/2016	$49.83	$7.10	$13.00	$0.00	$69.93
	12/01/2016	$50.83	$7.10	$13.00	$0.00	$70.93
For apprentice rates see "Apprentice- LABORER"						
TUNNEL WORK - COMPRESSED AIR (HAZ. WASTE) *LABORERS (COMPRESSED AIR)*	06/01/2013	$47.33	$7.10	$13.00	$0.00	$67.43
	12/01/2013	$48.08	$7.10	$13.00	$0.00	$68.18
	06/01/2014	$48.83	$7.10	$13.00	$0.00	$68.93
	12/01/2014	$49.58	$7.10	$13.00	$0.00	$69.68
	06/01/2015	$50.33	$7.10	$13.00	$0.00	$70.43
	12/01/2015	$51.08	$7.10	$13.00	$0.00	$71.18
	06/01/2016	$51.83	$7.10	$13.00	$0.00	$71.93
	12/01/2016	$52.83	$7.10	$13.00	$0.00	$72.93
For apprentice rates see "Apprentice- LABORER"						

Classification	Effective Date	Base Wage	Health	Pension	Supplemental Unemployment	Total Rate
TUNNEL WORK - FREE AIR *LABORERS (FREE AIR TUNNEL)*	06/01/2013	$37.40	$7.10	$13.00	$0.00	$57.50
	12/01/2013	$38.15	$7.10	$13.00	$0.00	$58.25
	06/01/2014	$38.90	$7.10	$13.00	$0.00	$59.00
	12/01/2014	$39.65	$7.10	$13.00	$0.00	$59.75
	06/01/2015	$40.40	$7.10	$13.00	$0.00	$60.50
	12/01/2015	$41.15	$7.10	$13.00	$0.00	$61.25
	06/01/2016	$41.90	$7.10	$13.00	$0.00	$62.00
	12/01/2016	$42.90	$7.10	$13.00	$0.00	$63.00
For apprentice rates see "Apprentice- LABORER"						
TUNNEL WORK - FREE AIR (HAZ. WASTE) *LABORERS (FREE AIR TUNNEL)*	06/01/2013	$39.40	$7.10	$13.00	$0.00	$59.50
	12/01/2013	$40.15	$7.10	$13.00	$0.00	$60.25
	06/01/2014	$40.90	$7.10	$13.00	$0.00	$61.00
	12/01/2014	$41.65	$7.10	$13.00	$0.00	$61.75
	06/01/2015	$42.40	$7.10	$13.00	$0.00	$62.50
	12/01/2015	$43.15	$7.10	$13.00	$0.00	$63.25
	06/01/2016	$43.90	$7.10	$13.00	$0.00	$64.00
	12/01/2016	$44.90	$7.10	$13.00	$0.00	$65.00
For apprentice rates see "Apprentice- LABORER"						
VAC-HAUL *TEAMSTERS JOINT COUNCIL NO. 10 ZONE A*	12/01/2012	$31.84	$8.91	$8.00	$0.00	$48.75
WAGON DRILL OPERATOR *LABORERS - ZONE 1*	06/01/2013	$33.30	$7.10	$12.45	$0.00	$52.85
	12/01/2013	$34.05	$7.10	$12.45	$0.00	$53.60
	06/01/2014	$34.80	$7.10	$12.45	$0.00	$54.35
	12/01/2014	$35.55	$7.10	$12.45	$0.00	$55.10
	06/01/2015	$36.30	$7.10	$12.45	$0.00	$55.85
	12/01/2015	$37.05	$7.10	$12.45	$0.00	$56.60
	06/01/2016	$37.80	$7.10	$12.45	$0.00	$57.35
	12/01/2016	$38.80	$7.10	$12.45	$0.00	$58.35
For apprentice rates see "Apprentice- LABORER"						
WASTE WATER PUMP OPERATOR *OPERATING ENGINEERS LOCAL 4*	06/01/2013	$40.34	$10.00	$13.55	$0.00	$63.89
	12/01/2013	$41.12	$10.00	$13.55	$0.00	$64.67
For apprentice rates see "Apprentice- OPERATING ENGINEERS"						
WATER METER INSTALLER *PLUMBERS & GASFITTERS LOCAL 12*	03/01/2013	$49.31	$9.32	$13.29	$0.00	$71.92
For apprentice rates see "Apprentice- PLUMBER/PIPEFITTER" or "PLUMBER/GASFITTER"						
Outside Electrical - East						
CABLE TECHNICIAN (Power Zone) *OUTSIDE ELECTRICAL WORKERS - EAST LOCAL 104*	03/03/2013	$25.18	$8.20	$4.17	$0.00	$37.55
	09/01/2013	$25.66	$8.70	$4.48	$0.00	$38.84
For apprentice rates see "Apprentice- LINEMAN"						
CABLEMAN (Underground Ducts & Cables) *OUTSIDE ELECTRICAL WORKERS - EAST LOCAL 104*	03/03/2013	$35.67	$8.20	$4.98	$0.00	$48.85
	09/01/2013	$36.55	$8.70	$6.58	$0.00	$51.83
For apprentice rates see "Apprentice- LINEMAN"						
DRIVER / GROUNDMAN CDL *OUTSIDE ELECTRICAL WORKERS - EAST LOCAL 104*	03/03/2013	$29.38	$8.20	$5.68	$0.00	$43.26
	09/01/2013	$29.94	$8.70	$6.05	$0.00	$44.69
For apprentice rates see "Apprentice- LINEMAN"						
DRIVER / GROUNDMAN -Inexperienced (<2000 Hrs) *OUTSIDE ELECTRICAL WORKERS - EAST LOCAL 104*	03/03/2013	$23.08	$8.20	$3.94	$0.00	$35.22
	09/01/2013	$23.52	$8.70	$5.24	$0.00	$37.46
For apprentice rates see "Apprentice- LINEMAN"						

Classification	Effective Date	Base Wage	Health	Pension	Supplemental Unemployment	Total Rate
EQUIPMENT OPERATOR (Class A CDL) *OUTSIDE ELECTRICAL WORKERS - EAST LOCAL 104*	03/03/2013	$35.67	$8.20	$8.98	$0.00	$52.85
For apprentice rates see "Apprentice- LINEMAN"	09/01/2013	$36.35	$8.70	$9.43	$0.00	$54.48
EQUIPMENT OPERATOR (Class B CDL) *OUTSIDE ELECTRICAL WORKERS - EAST LOCAL 104*	03/03/2013	$31.48	$8.20	$6.19	$0.00	$45.87
For apprentice rates see "Apprentice- LINEMAN"	09/01/2013	$32.08	$8.70	$6.59	$0.00	$47.37
GROUNDMAN *OUTSIDE ELECTRICAL WORKERS - EAST LOCAL 104*	03/03/2013	$23.08	$8.20	$3.42	$0.00	$34.70
For apprentice rates see "Apprentice- LINEMAN"	09/01/2013	$23.52	$8.70	$3.72	$0.00	$35.94
GROUNDMAN -Inexperienced (<2000 Hrs.) *OUTSIDE ELECTRICAL WORKERS - EAST LOCAL 104*	03/03/2013	$18.89	$8.20	$2.61	$0.00	$29.70
For apprentice rates see "Apprentice- LINEMAN"	09/01/2013	$19.25	$8.70	$2.85	$0.00	$30.80
JOURNEYMAN LINEMAN *OUTSIDE ELECTRICAL WORKERS - EAST LOCAL 104*	03/03/2013	$41.97	$8.20	$11.26	$0.00	$61.43
	09/01/2013	$42.77	$8.70	$11.78	$0.00	$63.25

Apprentice - *LINEMAN (Outside Electrical) - East Local 104*

Effective Date - 03/03/2013

Step	percent	Apprentice Base Wage	Health	Pension	Supplemental Unemployment	Total Rate
1	60	$25.18	$8.20	$3.92	$0.00	$37.30
2	65	$27.28	$8.20	$4.36	$0.00	$39.84
3	70	$29.38	$8.20	$5.06	$0.00	$42.64
4	75	$31.48	$8.20	$5.76	$0.00	$45.44
5	80	$33.58	$8.20	$6.46	$0.00	$48.24
6	85	$35.67	$8.20	$7.17	$0.00	$51.04
7	90	$37.77	$8.20	$8.36	$0.00	$54.33

Effective Date - 09/01/2013

Step	percent	Apprentice Base Wage	Health	Pension	Supplemental Unemployment	Total Rate
1	60	$25.66	$8.70	$4.24	$0.00	$38.60
2	65	$27.80	$8.70	$4.71	$0.00	$41.21
3	70	$29.94	$8.70	$5.43	$0.00	$44.07
4	75	$32.08	$8.70	$6.16	$0.00	$46.94
5	80	$34.22	$8.70	$6.88	$0.00	$49.80
6	85	$36.35	$8.70	$7.62	$0.00	$52.67
7	90	$38.49	$8.70	$8.83	$0.00	$56.02

Notes:

Apprentice to Journeyworker Ratio:1:2

TELEDATA CABLE SPLICER *OUTSIDE ELECTRICAL WORKERS - EAST LOCAL 104*	07/16/2012	$26.33	$4.18	$2.79	$0.00	$33.30
TELEDATA LINEMAN/EQUIPMENT OPERATOR *OUTSIDE ELECTRICAL WORKERS - EAST LOCAL 104*	07/16/2012	$24.78	$4.18	$2.74	$0.00	$31.70
TELEDATA WIREMAN/INSTALLER/TECHNICIAN *OUTSIDE ELECTRICAL WORKERS - EAST LOCAL 104*	07/16/2012	$24.78	$4.18	$2.74	$0.00	$31.70

Classification	Effective Date	Base Wage	Health	Pension	Supplemental Unemployment	Total Rate
TREE TRIMMER *OUTSIDE ELECTRICAL WORKERS - EAST LOCAL 104* This classification applies only to the trimming of branches on and around utility lines.	01/29/2012	$17.18	$3.37	$0.00	$0.00	$20.55
TREE TRIMMER GROUNDMAN *OUTSIDE ELECTRICAL WORKERS - EAST LOCAL 104* This classification applies only to the trimming of branches on and around utility lines.	01/29/2012	$15.15	$3.37	$0.00	$0.00	$18.52

Additional Apprentice Information:

Minimum wage rates for apprentices employed on public works projects are listed above as a percentage of the pre-determined hourly wage rate established by the Commissioner under the provisions of the M.G.L. c. 149, ss. 26-27D. Apprentice ratios are established by the Division of Apprenticeship Training pursuant to M.G.L. c. 23, ss. 11E-11L.

All apprentices must be registered with the Division of Apprenticeship Training in accordance with M.G.L. c. 23, ss. 11E-11L.

All steps are six months (1000 hours) unless otherwise specified.

* Ratios are expressed in allowable number of apprentices to journeymen or fraction thereof.
** Multiple ratios are listed in the comment field.
*** APP to JM; 1:1, 2:2, 2:3, 3:4, 4:4, 4:5, 4:6, 5:7, 6:7, 6:8, 6:9, 7:10, 8:10, 8:11, 8:12, 9:13, 10:13, 10:14, etc.
**** APP to JM; 1:1, 1:2, 2:3, 2:4, 3:5, 4:6, 4:7, 5:8, 6:9, 6:10, 7:11, 8:12, 8:13, 9:14, 10:15, 10:16, etc.

CITY OF QUINCY
DEPARTMENT OF
PUBLIC WORKS

ADAMS STREET
ROAD IMPROVEMENTS
SUMMER 2013
IN THE CITY OF
QUINCY

DRAWING INDEX

DWG. NO.	DESCRIPTION
1	COVER SHEET
2	LEGEND & GENERAL NOTES
3	DETAILS
4	DETAILS
5	CONSTRUCTION PLAN - ADAMS STREET
6	CONSTRUCTION PLAN - ADAMS STREET
7	CONSTRUCTION PLAN - ADAMS STREET
8	CONSTRUCTION PLAN - ADAMS STREET
T-1	TRAFFIC SIGNAL PLAN - ADAMS STREET & BEALE STREET
T-2	MAST ARM LOAD DIAGRAMS
T-3	MAST ARM LOAD DIAGRAMS
T-4	MAST ARM DETAILS
T-5	MAST ARM PIER FOUNDATIONS
T-6	DETECTOR NOTES & DETAILS
T-7	BICYCLE LOOP DETECTOR NOTES & DETAILS

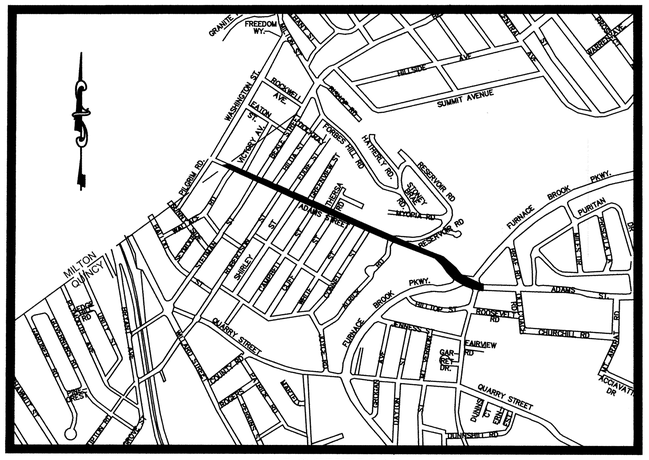

LOCUS MAP

THE HONORABLE THOMAS P. KOCH, MAYOR

DEPARTMENT OF PUBLIC WORKS
DANIEL G. RAYMONDI, COMMISSIONER

ENGINEERING DEPARTMENT
SHAWN P. HARDY, P.E., CITY ENGINEER

GENERAL SYMBOLS

EXISTING	PROPOSED	
CB	CB	CATCH BASIN
CBCI	CBCI	CATCH BASIN WITH CURB INLET
		CURB–TYPE NOTED
		EDGE OF ROAD
EHH	EHH	ELECTRIC HAND HOLE
E	EMH	ELECTRIC MANHOLE
T	TMH	TELEPHONE MANHOLE
S	SMH	SEWER MANHOLE
W	WMH	WATER MANHOLE
D	DMH	DRAINAGE MANHOLE
GV	GV	GAS GATE VALVE
WV	WV	WATER GATE VALVE
WS	WS	WATER SHUTOFF
		HYDRANT
F	F	FIRE ALARM BOX
		STREET LIGHT
		UTILITY POLE
		GUY POLE
D	D	DRAIN PIPE (SIZE AND TYPE NOTED)
S	S	SEWER MAIN
E	E	ELECTRIC DUCT
E	E/TI	ELECTRIC DUCT W/ TRAFFIC INTERCONNECT CONDUIT ABOVE
G	G	GAS MAIN
W	D.I.W.M.	WATER MAIN (SIZE AND TYPE NOTED)
T	T	TELEPHONE DUCT
FA	FA	FIRE ALARM
C	C	CABLE TV
		HIGHWAY GUARD (TYPE NOTED)
MHB,SE,CB*	MHB,SE,CB*	HIGHWAY / PROPERTY BOUND (TYPE NOTED)
	0+100	CONSTRUCTION BASELINE
		WHEELCHAIR RAMP
		TREE /CUT & REMOVE TREE ROOT
MB	MB	MAIL BOX

PAVEMENT MARKINGS AND SIGNING SYMBOLS

EXISTING	PROPOSED	
ONLY	ONLY	PAVEMENT ARROW AND LEGEND
CW	CW	CROSSWALK
SL	SL	STOP LINE, 300mm WHITE LINE 1.2m BEHIND CW (TYP.)
		SIGN AND POST
		SIGN MTD ON LIGHT POST
SWLL	SWLL	SOLID WHITE LANE LINE – 100mm
BWLL	BWLL	BROKEN WHITE LANE LINE – 100mm
BYCL	BYCL	BROKEN YELLOW CENTERLINE – 100mm
DYCL	DYCL	DOUBLE YELLOW CENTERLINE – 2–100mm LINES
SYBL	SYBL	SOLID YELLOW BARRIER LINE – 100mm
SYEL	SYEL	SOLID YELLOW EDGE LINE – 100mm
SWEL	SWEL	SOLID WHITE EDGE LINE – 100mm

GENERAL SYMBOLS

EXISTING	PROPOSED	
		CONTROL CABINET GROUND MOUNTED
		CONTROL CABINET POLE MOUNTED
		FLASHING BEACON CONTROL & METER PEDESTAL
		SIGNAL POST & BASE
		MAST ARM, SHAFT & BASE (ARM LENGTH AS NOTED)
		VEHICULAR SIGNAL HEAD (ALPHANUMERIC DESIGNATION NOTED)
		VEHICULAR SIGNAL HEAD OPTICALLY PROGRAMMED (DO)
		FLASHING BEACON
		PEDESTRIAN SIGNAL HEAD
PB	PB	PULL BOX 24 X 24
		CONTROLLER PHASE
		LOOP DETECTOR
		PEDESTRIAN PUSH BUTTON
TS	TS	TRAFFIC SIGNAL

ABBREVIATIONS

ABD.	ABANDON
ADJ.	ADJUST
BIT. CONC.	BITUMINOUS CONCRETE
BLDG.	BUILDING
CEM. CONC.	CEMENT CONCRETE
CW	CROSS WALK
DW	DRIVEWAY
EXIST.	EXISTING
FDN.	FOUNDATION
GRAN.	GRANITE
L.O.W.	LIMIT OF WORK
MHWY.	MASS HIGHWAY
N.I.C.	NOT IN CONTRACT
N.T.S.	NOT TO SCALE
PROP.	PROPOSED
R & R	REMOVE AND RESET
R & S	REMOVE AND STACK
RECONSTR.	RECONSTRUCTION
RELOC.	RELOCATE
REM.	REMOVE
REMOD.	REMODEL
RET.	RETAIN
REPL.	REPLACE
SW	SIDEWALK
WCR	WHEELCHAIR RAMP

CONSTRUCTION NOTES:

1. THE CONTRACTOR SHALL NOT INSTALL ANY TOP COURSE OF PAVEMENT WITHOUT FIRST APPLYING BITUMEN FOR TACK/PRIME COAT AS SPECIFIED AND DIRECTED BY THE ENGINEER AND AS NOTED IN THE DIVISION TWO–TECHNICAL SPECIFICATION SECTION. HOT POURED RUBBERIZED ASPHALT SEALANT SHALL ALSO BE APPLIED TO LONGITUDINAL AND TRANSVERSE JOINTS AS PER THE MHWY STANDARD SPECIFICATIONS, SECTION 460. THE SEALANT SHALL BE CONSIDERED INCIDENTAL TO ALL CLASS I BITUMINOUS CONCRETE PAVEMENTS OF SAID SECTION.
2. EXISTING CONDITIONS ARE BASED ON A SURVEY PLAN BY DASILVA SURVEY SERVICES DATED JUNE 14, 2013.
3. LOCATIONS OF M.H., G.G., W.G., ETC. ARE APPROXIMATE & SHOWN ONLY AS AN AID TO ASSIST BIDDERS IN DETERMINING EXACT LOCATION OF EXISTING UTILITIES & SUBSURFACE STRUCTURES, THEREFORE EXACT LOCATION AND COMPLETENESS IS NOT GUARANTEED. THE CONTRACTOR IS RESPONSIBLE FOR MAKING FIELD INVESTIGATIONS & OBTAINING INFORMATION FROM UTILITY COMPANIES & INDIVIDUALS TO PINPOINT THE LOCATION & ELEVATIONS OF ALL SUBSURFACE UTILITIES & STRUCTURES PRIOR TO THE START OF CONSTRUCTION.
4. IT SHALL BE THE CONTRACTOR'S RESPONSIBILITY TO PERFORM ALL WORK AS INDICATED ON THE DRAWINGS, IN THE SPECIFICATIONS & AS DIRECTED BY THE ENGINEER IN CONFORMANCE WITH ALL APPLICABLE CODES IN A PROPER AND WORKMANLIKE MANNER.
5. THE CONTRACTOR SHALL OBSERVE OSHA STANDARD FOR SAFETY.
6. WHERE THE EXISTING SIDEWALK IS TO BE REMOVED AS IT ABUTS A WALL, BUILDING FACE, OR ANY OTHER EXISTING FEATURE, EXTREME CARE SHALL BE EXERCISED BY THE CONTRACTOR, AND ANY DAMAGE RESULTING SHALL BE REPAIRED TO THE SATISFACTION OF THE ENGINEER AT THE CONTRACTOR'S EXPENSE.
7. ADJUSTMENT OR REMOVAL OF GAS, TEL. & ELEC. STRUCTURES SHALL BE BY OTHERS. ALL DRAIN AND SEWER MANHOLES, WATER GATES & OTHER MUNICIPAL & STATE OWNED UTILITY BOXES OR STRUCTURES WITHIN THE CONSTRUCTION AREA SHALL BE ADJUSTED TO MEET NEW GRADE BY THE CONTRACTOR UNLESS OTHERWISE NOTED.
8. DUE TO THE EXISTENCE OF SENSITIVE UTILITIES SUCH AS ELECTRICAL CONDUITS AND TELEPHONE FIBER OPTIC CABLES, EXTREME CAUTION MUST BE TAKEN WHENEVER TRENCHING.
9. THE CONTRACTOR'S ATTENTION IS DIRECTED TO THE FACT THAT, FROM TIME TO TIME, OTHER PARTIES MAY BE WORKING IN THE CONTRACTOR'S WORK AREA. THE CONTRACTOR SHALL COORDINATE & COOPERATE WITH OTHER PARTIES WORKING CONCURRENTLY IN THE PROJECT AREA, INCLUDING WORK INSTALLING, REMOVING & REPLACING EXISTING ELECTRIC, TELEPHONE, GAS & CABLE TELEVISION LINES.
10. EXISTING ACTIVITIES MUST BE MAINTAINED BY THE CONTRACTOR AT ALL TIMES, INCLUDING: VEHICULAR TRAFFIC, PEDESTRIAN MOVEMENT, PARKING AND BUSINESS ACTIVITIES.
11. WHERE UTILITIES (CONDUIT, DRAIN PIPE, ETC.) ARE SHOWN INSTALLED OUTSIDE OF THE PAVEMENT LIMITS, THE SURFACE SHALL BE PERMANENTLY RESTORED AS SHOWN IN THE DETAILS.
12. IT SHALL BE THE CONTRACTOR'S RESPONSIBILITY TO POST ALL TEMPORARY "NO PARKING" SIGNS FOR THE CONVENIENCE OF CONSTRUCTION ACTIVITY. EXPENSES FOR TOWING SHALL BE THE CONTRACTOR'S RESPONSIBILITY AT LOCATIONS WHERE "NO PARKING" SIGNS HAVE NOT BEEN POSTED.

CITY OF QUINCY, MASSACHUSETTS

ROAD IMPROVEMENTS
SUMMER 2013

LEGEND & GENERAL NOTES

COMMONWEALTH OF MASSACHUSETTS
SHAWN P. HARCY
NO. 41850
CIVIL
REGISTERED PROFESSIONAL ENGINEER

SCALE	1=30'	DATE	2013		
DRAWN	NBG	DES'D.	JVG	APPRD.	SPH

CITY OF QUINCY, ENGINEERING DEPT.
55 SEA STREET
QUINCY, MASS. 02169

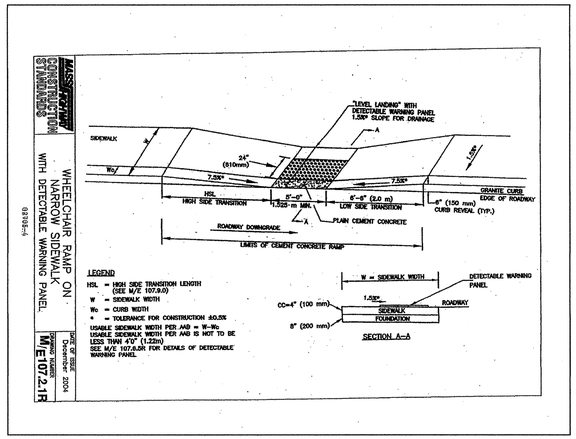

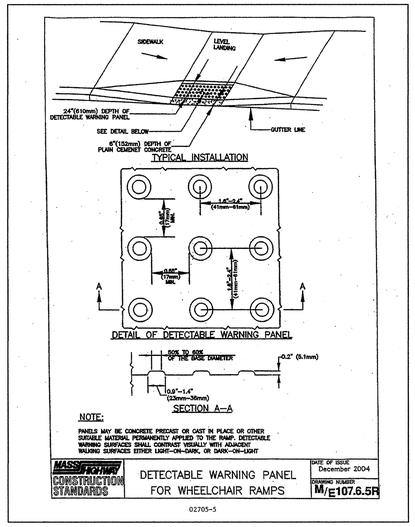

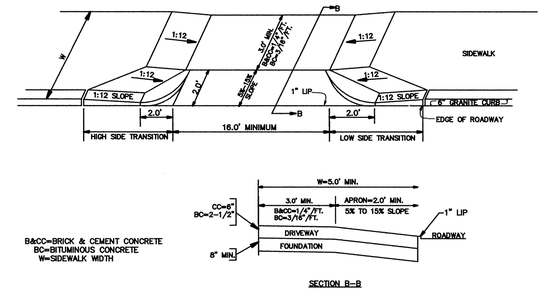

DRIVEWAYS

2.0' CURB CORNERS: 5.0' MIN. SIDEWALK

SURFACE: 1 1/2" BIT. CONC. PAVEMENT (TYPE I-1) OVERLAY.

BASE: EXISTING ROADWAY SURFACE W/ TACK COAT OR EXISTING COLD PLANED SURFACE W/TACK COAT 1/20 CAL/SY BITUMEN (RS-1)

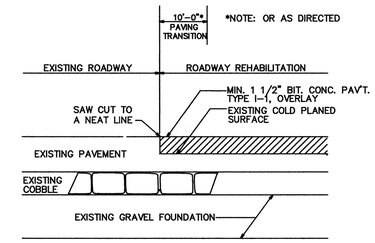

AREAS OF PROPOSED WIDENING / FULL DEPTH ROADWAY AREAS

THE FOLLOWING CROSSWALK PLAN SHOULD BE USED WHEN THE PEDESTRIAN SIGNAL PHASES LISTED BELOW ARE USED.

COMBINED PEDESTRIAN-VEHICULAR INTERVAL: A SIGNAL PHASING WHEREIN PEDESTRIANS MAY USE CERTAIN CROSSWALKS AND VEHICLES ARE PERMITTED TO TURN ACROSS THESE CROSSWALKS (THE PEDESTRIAN INDICATION SHALL BE STEADY WALK AND A SUPPLEMENTARY SIGN SHOULD BE USED "WATCH FOR TURNING VEHICLES.")

EXCLUSIVE CROSSWALK INTERVAL: A SIGNAL PHASING WHERIN PEDESTRIANS MAY USE CERTAIN CROSSWALKS BUT VEHICLES ARE PERMITTED TO MOVE ACROSS THESE CROSSWALKS DURING THE PEDESTRIAN MOVEMENT (THE PEDESTRIAN INDICATION SHALL BE STEADY WALK AND THERE SHALL BE NO TURN ON RED SIGN USED WITH THIS SIGNAL PHASE.)

EXCLUSIVE PEDESTRIAN PHASE: A SIGNAL PHASING WHEREIN PEDESTRIANS MAY PROCEED TO CROSS THE INTERSECTION IN ANY DIRECTION DURING AN EXCLUSIVE PHASE WHILE ALL VEHICLES ARE STOPPED (THE PEDESTRIAN INDICATION SHALL BE STEADY WALK.)

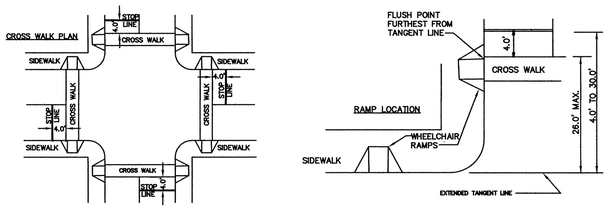

PAIRED WHEELCHAIR RAMP CONDITION

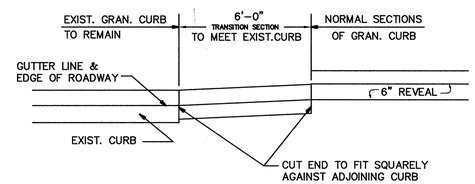

TRANSITION CURB DETAIL

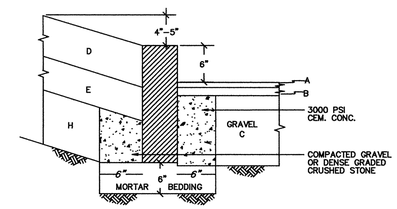

GRANITE CURB DETAIL

N.T.S.

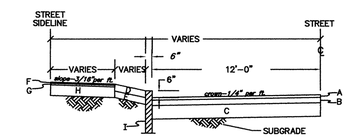

HALF CROSS SECTION

TABLE 2 - PAVEMENT STRUCTURE

MINIMUM REQUIREMENTS		
A	FINISH COURSE (BIT)	1 1/2"
B	BASE COURSE (BIT)	2 1/2"
C	GRAVEL SUB-BASE	12"
D	LOAM BORDER	6"
E	SUB-SOIL	6"
F	FINISH COURSE (BIT)	1"
G	BASE COURSE (BIT)	1 1/2"
H	GRAVEL SUB-BASE	8"
I	VA3 GRANITE CURB	19"-21"
J	CEMENT CONCRETE SIDEWALK	4"

TYPICAL STREET SECTION

40 FT. R.O.W.

NOTES:

1. ALL THICKNESSES ARE THE COMPACTED MINIMUM DEPTHS. ALL MATERIALS PLACED SHALL BE COMPACTED TO 95% OF MAXIMUM DRY DENSITY.
2. THE PAVEMENT STRUCTURE SPECIFIED IN TABLE 2 ABOVE APPLIES TO ALL STREETS WITH RIGHT OF WAY WIDTHS OF UP TO 50 FEET. ITEMS C & H ABOVE COULD BE GREATER THAN THE SPECIFIED DEPTH DEPENDING ON THE SUBGRADE CONDITIONS.

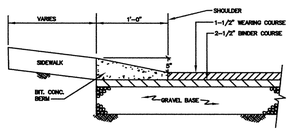

CAPE COD BERM

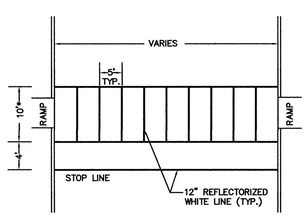

* NOTE: CROSSWALK SHALL BE 10' WIDE UNLESS NOTED OTHERWISE ON THE PLANS.

CROSSWALK AND STOPLINE PAVEMENT MARKING DETAIL

(NOT TO SCALE)

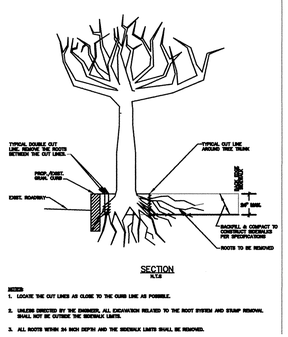

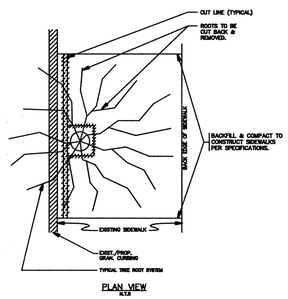

TREE ROOT SYSTEM REMOVAL DETAIL

N.T.S.

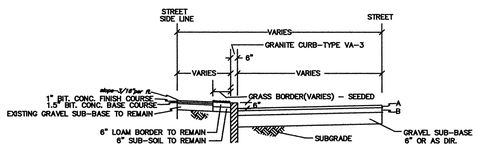

HALF CROSS SECTION

ROADWAY/SIDEWALK RECONSTRUCTION DETAIL

CITY OF QUINCY, MASSACHUSETTS

ROAD IMPROVEMENTS
SUMMER 2013

DETAILS

SCALE	NTS	DATE	2013		
DRAWN	NBG	DES'D.	JVG	APPRD.	SPH

COMMONWEALTH OF MASSACHUSETTS SHAWN P. HARDY NO. 41880 CIVIL REGISTERED PROFESSIONAL ENGINEER

CITY OF QUINCY, ENGINEERING DEPT.
55 SEA STREET
QUINCY, MASS. 02169

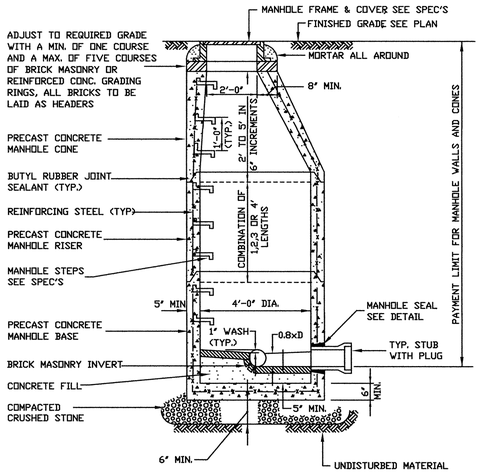

4'-0" DIA. PRECAST CONCRETE MANHOLE DETAIL

N.T.S.

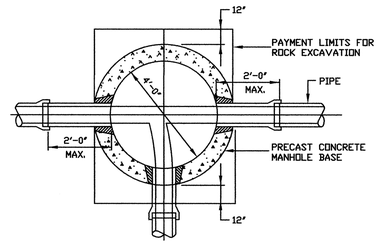

4'-0" DIA. MANHOLE PLAN

N.T.S.

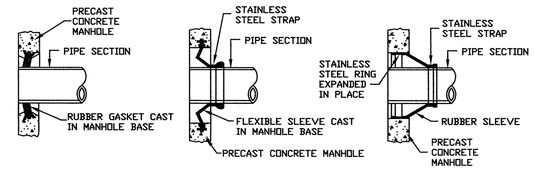

MANHOLE SEAL DETAILS

N.T.S.

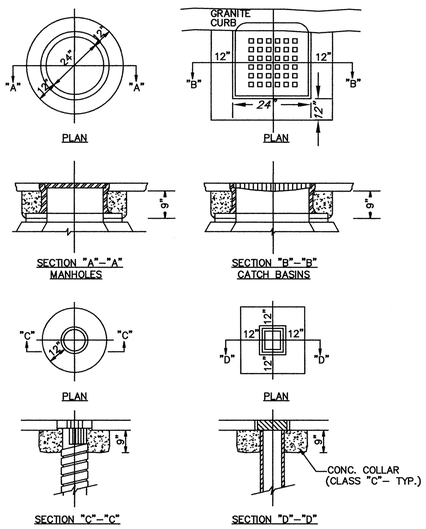

CONCRETE COLLARS

N.T.S.

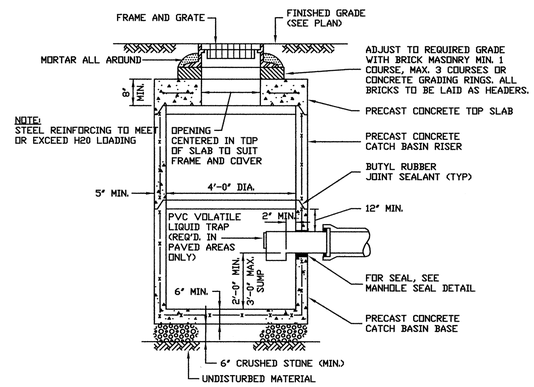

PRECAST CATCH BASIN DETAIL

N.T.S.

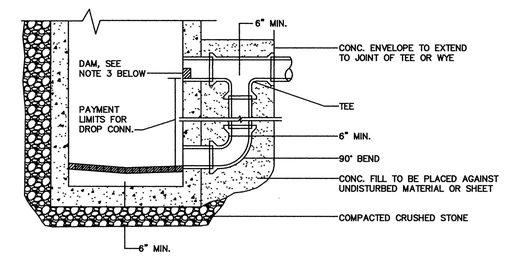

NOTES:
1. DROP PIPE TO BE SAME DIAMETER AS SEWER DISCHARGE INTO MANHOLE UNLESS OTHERWISE SHOWN ON DRAWINGS.
2. DIMENSIONS & CONSTRUCTION OF DROP MANHOLE TO BE SIMILAR TO TYPICAL MANHOLE EXCEPT AS SHOWN.
3. FOR PVC PIPE, EPOXY HALF PLUG TO PIPE. FOR DI, VC AND RC PIPE, MORTAR AND BRICK IN PIPE.

DROP CONNECTION DETAIL

N.T.S.

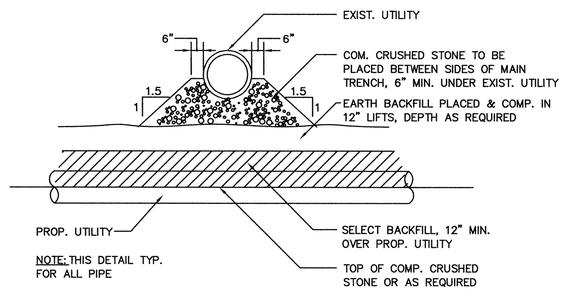

NOTE: THIS DETAIL TYP. FOR ALL PIPE

UTILITY CROSSING DETAIL

N.T.S.

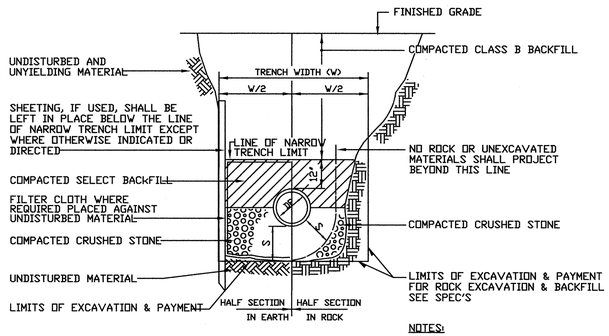

NOTES:
1. FOR W, DP, & S, SEE TABLE A
2. FOR RCP PIPE, CRUSHED STONE BEDDING IS NOT REQUIRED

TRENCH DETAIL

N.T.S.

DEPTH TO INVERT	DIAMETER OF PIPE (DP)	MAXIMUM TRENCH WIDTH BELOW LINE OF NARROW TRENCH LIMIT (SHEETED OR UNSHEETED) (W)	MINIMUM CLEARANCE (S)
0-12'	TO 18"	5'	6"
0-12'	21"-24"	5'	7-1/2"
OVER 12'	TO 18"	7'	6"
OVER 12'	21"-24"	7'	7-1/2"
OVER 12'	24"-36"	7'	7-1/2"

TABLE A

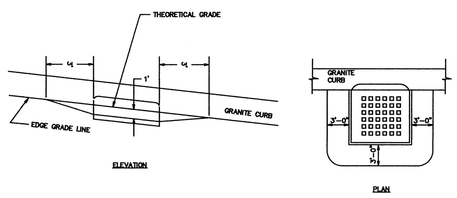

CATCH BASIN GRADING DETAIL

CITY OF QUINCY, MASSACHUSETTS

ROAD IMPROVEMENTS
SUMMER 2013

DETAILS

SCALE	NTS	DATE	2013		
DRAWN	NBG	DES'D.	JVG	APPRD.	SPH

COMMONWEALTH OF MASSACHUSETTS
SHAWN P. HARDY
NO. 41690
CIVIL
REGISTERED PROFESSIONAL ENGINEER

CITY OF QUINCY, ENGINEERING DEPT.
55 SEA STREET
QUINCY, MASS. 02169

SCOPE OF WORK:

2" BIT. EXCAVATION BY COLD PLANER
INSTALL LEVELING COURSE AS DIR.
INSTALL 2" BIT. TOP COURSE
INSTALL NEW CEM. CONC. SIDEWALKS AND DRIVEWAY APRONS
INSTALL NEW CEM. CONC. WCR's W/ DETECTABLE WARNING PANELS
R & R EXIST. GRAN CURB
INSTALL NEW GRAN. CURB AS SHOWN
DROP AND ADJUST ALL UTILITIES AS REQUIRED
LOAM AND SEED AS REQUIRED
INSTALL REFLECTORIZED THERMOPLASTIC AS REQUIRED
A LIST OF TREE & PLANTING LOCATIONS WILL BE PROVIDED IN THE FIELD

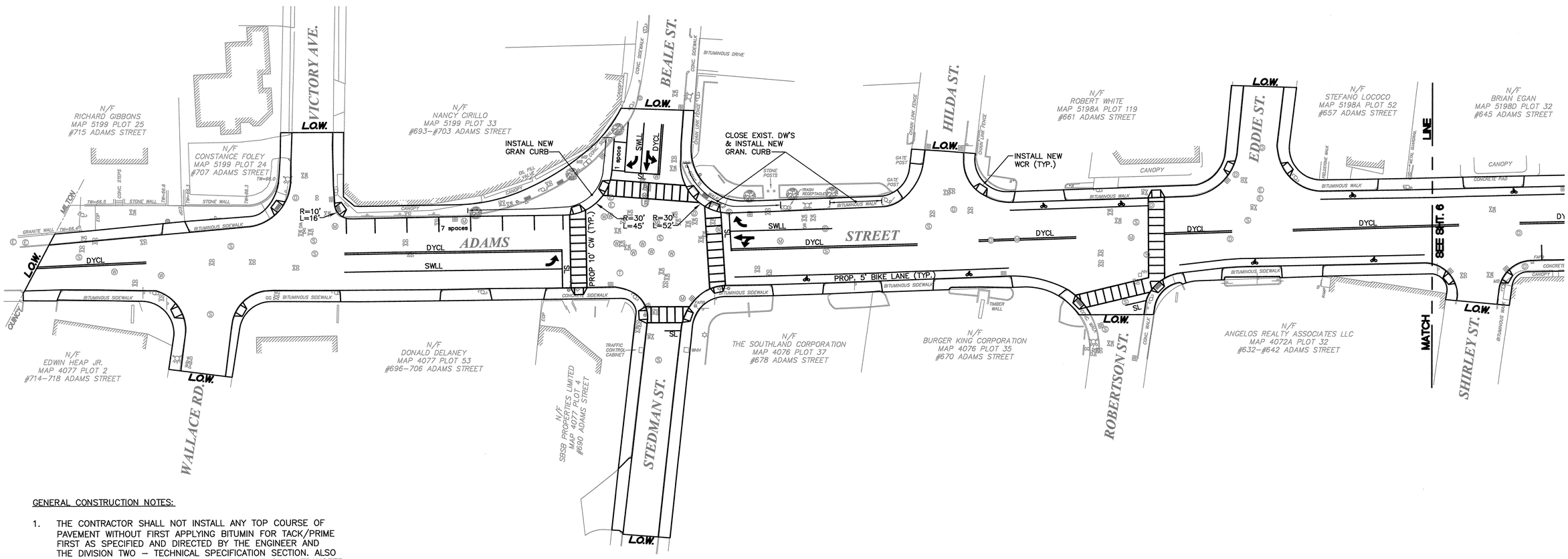

GENERAL CONSTRUCTION NOTES:

1. THE CONTRACTOR SHALL NOT INSTALL ANY TOP COURSE OF PAVEMENT WITHOUT FIRST APPLYING BITUMIN FOR TACK/PRIME FIRST AS SPECIFIED AND DIRECTED BY THE ENGINEER AND THE DIVISION TWO – TECHNICAL SPECIFICATION SECTION. ALSO EMULSIFIER SHALL BE APPLIED ON ALL LONGITUDINAL TRANSFER JOINTS AND AS DIRECTED BY THE ENGINEER.
2. ALL TRANSITIONS TO MEET GRADES OF EXISTING ROADS OUTSIDE OF WORK LIMITS, UNLESS OTHERWISE NOTED.
3. CONTRACTOR TO CHECK DOORWAY ELEVATIONS BEFORE SETTING CURB AND MAINTAIN PROPER SIDEWALK CROSS SLOPES.
4. THE PAVEMENT SECTION SHOWN ON SHEET 3 SHALL BE FOLLOWED UNLESS STATED OTHERWISE.
5. ALL ROADWAYS ARE TO BE GRADED TO EXISTING DRAINS. THE CONTRACTOR SHALL BE RESPONSIBLE TO CHECK THE GRADE ON SITE AND INFORM THE ENGINEER OF ANY DISCREPANCIES.
6. WATER, SEWER & DRAIN LOCATIONS TO BE VERIFIED BY CITY OF QUINCY DPW.
7. ALL TRAFFIC WARNING SIGNS TO BE ALUMINUM PANELS WITH REFLECTIVE SHEETING. TEXT AND COLOR SHALL MEET MUTCD STANDARD.
8. ANY AND ALL SIGN POSTS OR SIGNS REMOVED OR DAMAGED DURING THE COURSE OF CONSTRUCTION SHALL BE REPLACED AND RESET RESPECTIVELY AT THE CONTRACTOR'S EXPENSE.

CITY OF QUINCY, MASSACHUSETTS

ROAD IMPROVEMENTS
SUMMER 2013

ADAMS STREET

COMMONWEALTH OF MASSACHUSETTS
SHAWN P. HARGY
NO. 41880
CIVIL
REGISTERED PROFESSIONAL ENGINEER

SCALE	1=30'	DATE	2013		
DRAWN	NBG	DES'D.	JVG	APPRD.	SPH

CITY OF QUINCY, ENGINEERING DEPT.
55 SEA STREET
QUINCY, MASS. 02169

SCOPE OF WORK:

2" BIT. EXCAVATION BY COLD PLANER
INSTALL LEVELING COURSE AS DIR.
INSTALL 2" BIT. TOP COURSE
INSTALL NEW CEM. CONC. SIDEWALKS AND DRIVEWAY APRONS
INSTALL NEW CEM. CONC. WCR's W/ DETECTABLE WARNING PANELS
R & R EXIST. GRAN CURB
INSTALL NEW GRAN. CURB AS SHOWN
DROP AND ADJUST ALL UTILITIES AS REQUIRED
LOAM AND SEED AS REQUIRED
INSTALL REFLECTORIZED THERMOPLASTIC AS REQUIRED
A LIST OF TREE & PLANTING LOCATIONS WILL BE PROVIDED IN THE FIELD

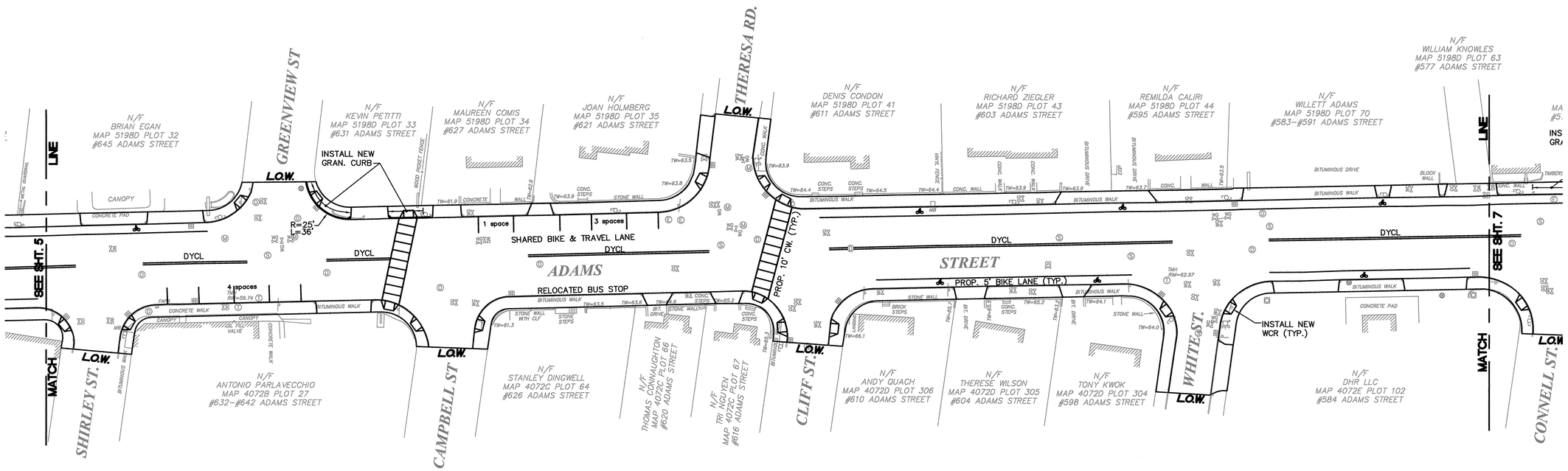

GENERAL CONSTRUCTION NOTES:

1. THE CONTRACTOR SHALL NOT INSTALL ANY TOP COURSE OF PAVEMENT WITHOUT FIRST APPLYING BITUMIN FOR TACK/PRIME FIRST AS SPECIFIED AND DIRECTED BY THE ENGINEER AND THE DIVISION TWO – TECHNICAL SPECIFICATION SECTION. ALSO EMULSIFIER SHALL BE APPLIED ON ALL LONGITUDINAL TRANSFER JOINTS AND AS DIRECTED BY THE ENGINEER.
2. ALL TRANSITIONS TO MEET GRADES OF EXISTING ROADS OUTSIDE OF WORK LIMITS, UNLESS OTHERWISE NOTED.
3. CONTRACTOR TO CHECK DOORWAY ELEVATIONS BEFORE SETTING CURB AND MAINTAIN PROPER SIDEWALK CROSS SLOPES.
4. THE PAVEMENT SECTION SHOWN ON SHEET 3 SHALL BE FOLLOWED UNLESS STATED OTHERWISE.
5. ALL ROADWAYS ARE TO BE GRADED TO EXISTING DRAINS. THE CONTRACTOR SHALL BE RESPONSIBLE TO CHECK THE GRADE ON SITE AND INFORM THE ENGINEER OF ANY DISCREPANCIES.
6. WATER, SEWER & DRAIN LOCATIONS TO BE VERIFIED BY CITY OF QUINCY DPW.
7. ALL TRAFFIC WARNING SIGNS TO BE ALUMINUM PANELS WITH REFLECTIVE SHEETING. TEXT AND COLOR SHALL MEET MUTCD STANDARD.
8. ANY AND ALL SIGN POSTS OR SIGNS REMOVED OR DAMAGED DURING THE COURSE OF CONSTRUCTION SHALL BE REPLACED AND RESET RESPECTIVELY AT THE CONTRACTOR'S EXPENSE.

CITY OF QUINCY, MASSACHUSETTS

ROAD IMPROVEMENTS
SUMMER 2013

ADAMS STREET

SCALE	1=30'	DATE	2013		
DRAWN	NBG	DES'D.	JVG	APPRD.	SPH

COMMONWEALTH OF MASSACHUSETTS
SHAWN P. HARGY
NO. 41630
CIVIL
REGISTERED PROFESSIONAL ENGINEER

CITY OF QUINCY, ENGINEERING DEPT.
55 SEA STREET
QUINCY, MASS. 02169

SCOPE OF WORK:

2" BIT. EXCAVATION BY COLD PLANER
INSTALL LEVELING COURSE AS DIR.
INSTALL 2" BIT. TOP COURSE
INSTALL NEW CEM. CONC. SIDEWALKS AND DRIVEWAY APRONS
INSTALL NEW CEM. CONC. WCR's W/ DETECTABLE WARNING PANELS
R & R EXIST. GRAN CURB
INSTALL NEW GRAN. CURB AS SHOWN
DROP AND ADJUST ALL UTILITIES AS REQUIRED
LOAM AND SEED AS REQUIRED
INSTALL REFLECTORIZED THERMOPLASTIC AS REQUIRED
A LIST OF TREE & PLANTING LOCATIONS WILL BE PROVIDED IN THE FIELD

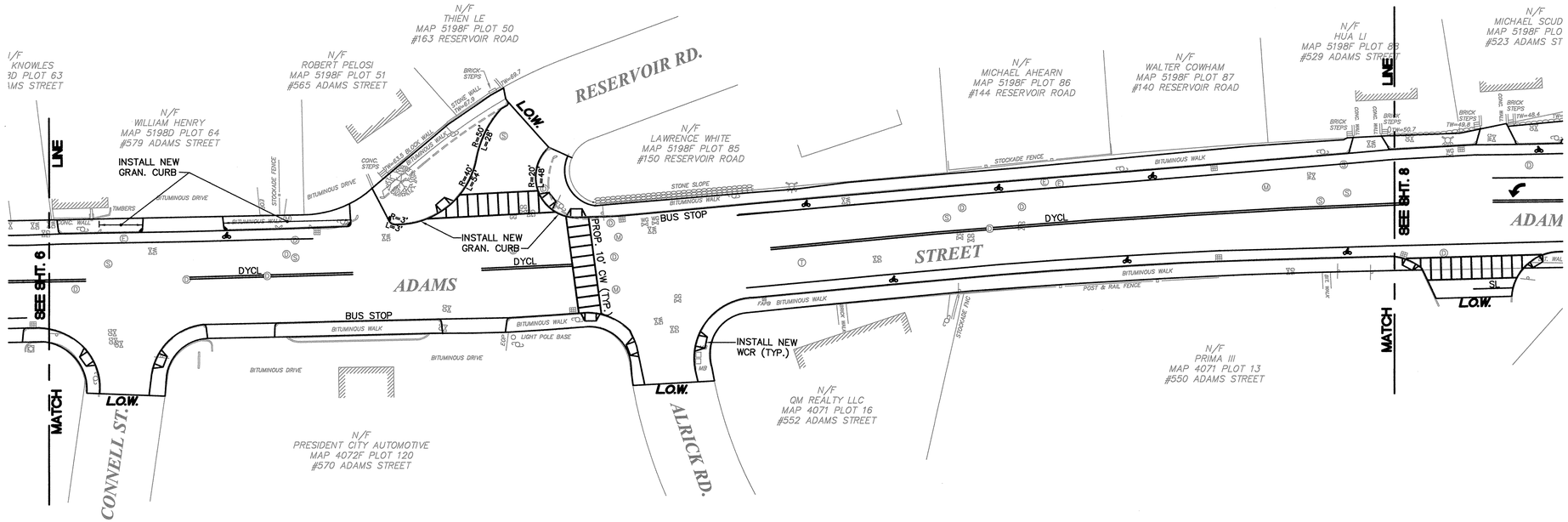

GENERAL CONSTRUCTION NOTES:

1. THE CONTRACTOR SHALL NOT INSTALL ANY TOP COURSE OF PAVEMENT WITHOUT FIRST APPLYING BITUMIN FOR TACK/PRIME FIRST AS SPECIFIED AND DIRECTED BY THE ENGINEER AND THE DIVISION TWO – TECHNICAL SPECIFICATION SECTION. ALSO EMULSIFIER SHALL BE APPLIED ON ALL LONGITUDINAL TRANSFER JOINTS AND AS DIRECTED BY THE ENGINEER.
2. ALL TRANSITIONS TO MEET GRADES OF EXISTING ROADS OUTSIDE OF WORK LIMITS, UNLESS OTHERWISE NOTED.
3. CONTRACTOR TO CHECK DOORWAY ELEVATIONS BEFORE SETTING CURB AND MAINTAIN PROPER SIDEWALK CROSS SLOPES.
4. THE PAVEMENT SECTION SHOWN ON SHEET 3 SHALL BE FOLLOWED UNLESS STATED OTHERWISE.
5. ALL ROADWAYS ARE TO BE GRADED TO EXISTING DRAINS. THE CONTRACTOR SHALL BE RESPONSIBLE TO CHECK THE GRADE ON SITE AND INFORM THE ENGINEER OF ANY DISCREPANCIES.
6. WATER, SEWER & DRAIN LOCATIONS TO BE VERIFIED BY CITY OF QUINCY DPW.
7. ALL TRAFFIC WARNING SIGNS TO BE ALUMINUM PANELS WITH REFLECTIVE SHEETING. TEXT AND COLOR SHALL MEET MUTCD STANDARD.
8. ANY AND ALL SIGN POSTS OR SIGNS REMOVED OR DAMAGED DURING THE COURSE OF CONSTRUCTION SHALL BE REPLACED AND RESET RESPECTIVELY AT THE CONTRACTOR'S EXPENSE.

CITY OF QUINCY, MASSACHUSETTS

ROAD IMPROVEMENTS
SUMMER 2013

ADAMS STREET

COMMONWEALTH OF MASSACHUSETTS
SHAWN P. HARCY
NO. 41690
CIVIL
REGISTERED PROFESSIONAL ENGINEER

SCALE	1=30'	DATE	2013		
DRAWN	NBG	DES'D.	JVG	APPRD.	SPH

CITY OF QUINCY, ENGINEERING DEPT.
55 SEA STREET
QUINCY, MASS. 02169

SCOPE OF WORK:

2" BIT. EXCAVATION BY COLD PLANER
INSTALL LEVELING COURSE AS DIR.
INSTALL 2" BIT. TOP COURSE
INSTALL NEW CEM. CONC. SIDEWALKS AND DRIVEWAY APRONS
INSTALL NEW CEM. CONC. WCR's W/ DETECTABLE WARNING PANELS
R & R EXIST. GRAN CURB
INSTALL NEW GRAN. CURB AS SHOWN
DROP AND ADJUST ALL UTILITIES AS REQUIRED
LOAM AND SEED AS REQUIRED
INSTALL REFLECTORIZED THERMOPLASTIC AS REQUIRED
A LIST OF TREE & PLANTING LOCATIONS WILL BE PROVIDED IN THE FIELD

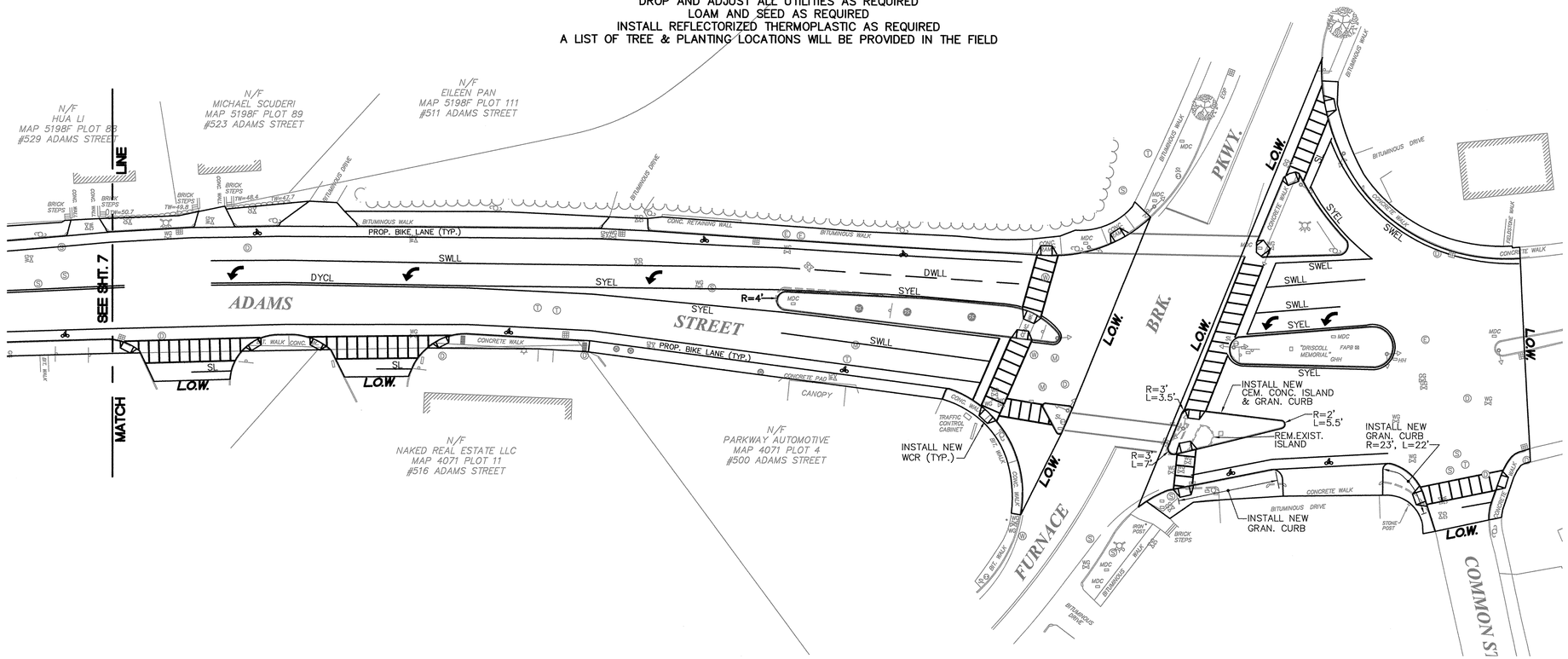

GENERAL CONSTRUCTION NOTES:

1. THE CONTRACTOR SHALL NOT INSTALL ANY TOP COURSE OF PAVEMENT WITHOUT FIRST APPLYING BITUMIN FOR TACK/PRIME FIRST AS SPECIFIED AND DIRECTED BY THE ENGINEER AND THE DIVISION TWO – TECHNICAL SPECIFICATION SECTION. ALSO EMULSIFIER SHALL BE APPLIED ON ALL LONGITUDINAL TRANSFER JOINTS AND AS DIRECTED BY THE ENGINEER.
2. ALL TRANSITIONS TO MEET GRADES OF EXISTING ROADS OUTSIDE OF WORK LIMITS, UNLESS OTHERWISE NOTED.
3. CONTRACTOR TO CHECK DOORWAY ELEVATIONS BEFORE SETTING CURB AND MAINTAIN PROPER SIDEWALK CROSS SLOPES.
4. THE PAVEMENT SECTION SHOWN ON SHEET 3 SHALL BE FOLLOWED UNLESS STATED OTHERWISE.
5. ALL ROADWAYS ARE TO BE GRADED TO EXISTING DRAINS. THE CONTRACTOR SHALL BE RESPONSIBLE TO CHECK THE GRADE ON SITE AND INFORM THE ENGINEER OF ANY DISCREPANCIES.
6. WATER, SEWER & DRAIN LOCATIONS TO BE VERIFIED BY CITY OF QUINCY DPW.
7. ALL TRAFFIC WARNING SIGNS TO BE ALUMINUM PANELS WITH REFLECTIVE SHEETING. TEXT AND COLOR SHALL MEET MUTCD STANDARD.
8. ANY AND ALL SIGN POSTS OR SIGNS REMOVED OR DAMAGED DURING THE COURSE OF CONSTRUCTION SHALL BE REPLACED AND RESET RESPECTIVELY AT THE CONTRACTOR'S EXPENSE.

CITY OF QUINCY, MASSACHUSETTS

ROAD IMPROVEMENTS
SUMMER 2013

ADAMS STREET

COMMONWEALTH OF MASSACHUSETTS
SHAWN P. HARDY
NO. 41690
CIVIL
REGISTERED PROFESSIONAL ENGINEER

SCALE	1=30'	DATE	2013		
DRAWN	NBG	DES'D.	JVG	APPRD.	SPH

CITY OF QUINCY, ENGINEERING DEPT.
55 SEA STREET
QUINCY, MASS. 02169

STREET	DIR.	FACE	PHASE 1			PHASE 2			PHASE 3			PHASE 4			PHASE 5			PHASE 6			PHASE 7			PHASE 8			PHASE 9			FLASH
			1	2	3	4	5	6	7	8	9	10	11	12	13	14	15	16	17	18	19	20	21	22	23	24	25	26	27	
Adams Street	E BD	A	<G	<Y	R	R	R	R	R	R	R	R	R	R	R	R	R	G	Y	R	R	R	R	R	R	R	R	R	R	Y
Adams Street	E BD	B	R	R	R	R	R	R	R	R	R	R	R	R	R	R	R	G	Y	R	R	R	R	R	R	R	R	R	R	Y
Adams Street	W BD	C	R	R	R	G	Y	R	R	R	R	R	R	R	R	R	R	R	R	R	R	R	R	R	R	R	R	R	R	Y
Adams Street	W BD	D	R	R	R	G	Y	R	G->Y>		R	R	R	R	R	R	R	R	R	R	R	R	R	R	R	R	R	R	R	Y
Beal Street	S BD	E	R	R	R	R	R	R	<G	<Y	R	R	R	R	R	R	R	R	R	R	R	R	R	G	Y	R	R	R	R	R
Beal Street	S BD	F	R	R	R	R	R	R	R	R	R	R	R	R	R	R	R	R	R	R	R	R	R	G	Y	R	R	R	R	R
Stedman Street	N BD	G,H	R	R	R	R	R	R	R	R	R	G	Y	R	R	R	R	R	R	R	R	R	R	R	R	R	R	R	R	R
Pedestrian		P	DW	DW	DW	DW	DW	DW	DW	DW	DW	DW	DW	DW	DW	DW	DW	DW	DW	DW	DW	DW	DW	DW	DW	DW	W	FDW	DW	OUT
MINIMUM GREEN			10			20			6			8						20						8						
VEHICLE INTERVAL			10			6			3			3						6						3						
MAXIMUM GREEN I			10			32			12			17						32						17						
MAXIMUM GREEN II			10			38			18			23						38						23						
MAXIMUM GREEN III			10			38			18			23						38						23						
YELLOW CLEAR				3			4			3			3						4							3				
ALL RED CLEAR				2				2			2			2						2							2			2
WALK																												5		
PED CLEAR																													20	
DUAL ENTRY						YES						YES						YES						YES						
RECALL						Soft Pre-Emption												Soft Pre-Emption												
MEMORY			NON-LOCKING			NON-LOCKING			NON-LOCKING			NON-LOCKING						NON-LOCKING						NON-LOCKING			LOCKING			
															NOT USED						NOT USED									

MAXIMUM I TIMING SHALL BE USED AT ALL TIMES EXCEPT AS FOLLOWS:
MAXIMUM II TIMING SHALL BE USED WEEKDAYS FROM 6:00 AM TO 10:00 AM
MAXIMUM III TIMING SHALL BE USED WEEKDAYS FROM 3:00 PM TO 7:00 PM
* OVERLAP "A" SHALL BE OMITTED DURING MAXIMUM II

SIGNAL NOTES:

1. ALL OTHER SIGNAL EQUIPMENT AT THIS LOCATION SHALL BE RETAINED, UNLESS OTHERWISE NOTED.
2. STANDARD NEMA PHASING IN A DUAL RING CONFIGURATION SHALL BE USED.
3. EACH LOOP DETECTOR SHALL BE CONNECTED TO A SINGLE LOOP AMPLIFIER CHANNEL.
4. ALL DETECTOR SETTINGS TO BE IMPLEMENTED AT THE CONTROLLER ONLY.
5. UNLESS OTHERWISE NOTED, LOOP DETECTORS SHALL BE PLACED IN THE CENTER OF THE LANE.
6. EXCLUSIVE PEDESTRIAN PHASE IS TO BE ACTIVATED BY PUSH BUTTON ONLY.

EMERGENCY PRE-EMPTION NOTES:

1. THE EMERGENCY BEACON SHALL CONSIST OF A FLASHING WHITE STROBE AND SHALL FLASH WHEN THE EMERGENCY VEHICLE HAS CONTROL OF THE INTERSECTION.
2. WHEN ACTIVATED BY AN EMERGENCY VEHICLE, THE SIGNAL SHALL TERMINATE ALL GREEN INDICATIONS IMMEDIATELY, FOLLOWED BY THE COMPLETE YELLOW AND RED CLEARANCE INTERVALS, ACCORDINGLY. THE GREEN INTERVAL FOR THE PRE-EMPTED PHASE SHALL THEN FOLLOW.
3. IF ADDITIONAL PRE-EMPTION PHASES ARE ACTIVATED WHILE IN PRE-EMPTION, THE ORIGINAL PRE-EMPTION PHASE SHALL TIME OUT BEFORE PROCEEDING TO THE NEXT PRE-EMPTION PHASE.
4. IF PHASE 9 IS ACTIVE AND ON WALK STATUS WHILE A PRE-EMPTION IS CALLED, PHASE 9 SHALL IMMEDIATELY CHANGE TO FDW AND FOLLOWED BY THE PRE-EMPTION PHASE.
5. UPON COMPLETION OF PRE-EMPTION, IN RETURNING TO NORMAL OPERATION, ϕ2 AND ϕ6 SHALL FOLLOW.
6. IN EMERGENCY PRE-EMPTION, NO PRIORITY SHALL BE ESTABLISHED, PRE-EMPTION SHALL BE A "FIRST COME, FIRST SERVE" OPERATION.

PROPOSED SIGNAL IDENTIFICATION

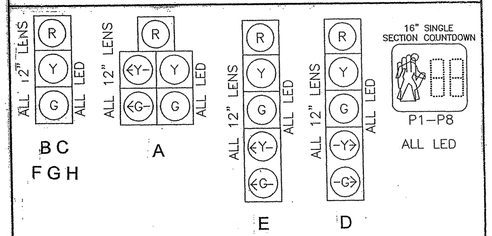

NOTES:

1. ALL SIGNAL HOUSINGS SHALL BE EQUIPPED WITH TUNNEL VISORS.
2. ALL SIGNALS SHALL BE EQUIPPED WITH 5" BACKPLATES (LOUVERED) AND INCLUDING A 2" REFLECTIVE BORDER.

NEMA DUAL RING PHASING NOTES:

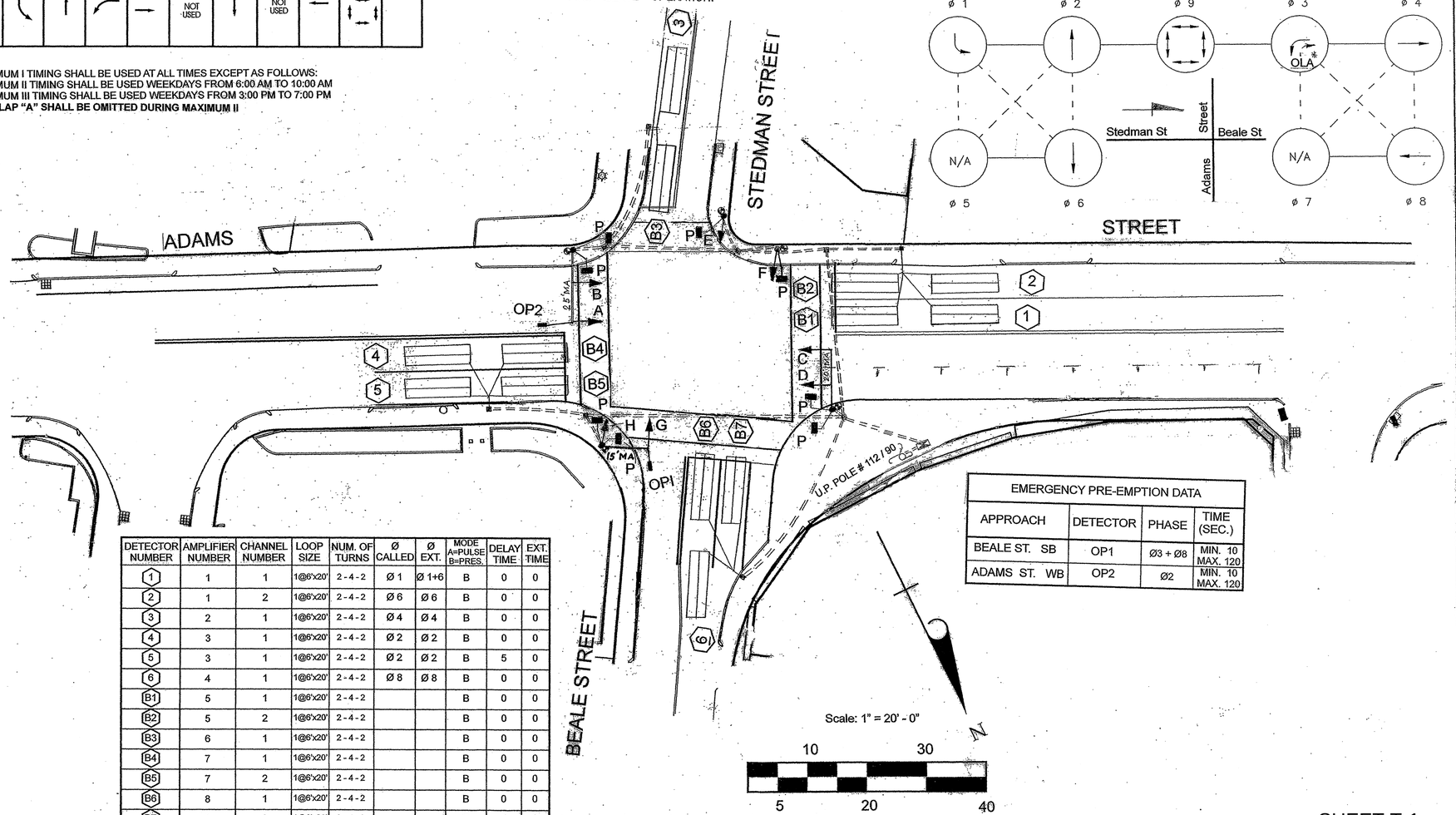

MAJOR LIST OF ITEMS		
PAY ITEM	QUANTITY	DESCRIPTION
815.01	1	TRAFFIC CONTROLLER 8DW & CABINET NEMA TS2 - TYPE1 siemens ASSEMBLY w/ FOUNDATION, CONCRETE PAD & ELECTRICAL METER w/ PHONE DROP
	1	OVERHEAD SERVICE CONNECTION TO U.P. #112 / 90 with PHONE DROP
	1	R&S SELECTED SIGNAL EQUIPMENT
	13	6' x 20' ROADWAY LOOP DETECTORS
	1	15' MAST ARMASSEMBLY, BASE & FDN.
	1	20' MAST ARMASSEMBLY, BASE & FDN.
	1	25' MAST ARMASSEMBLY, BASE & FDN.
	2	TRAFFIC SIGNAL POST & BASE (STANDARD) 10 FOOT AND FOUNDATION
	5	ONE WAY, 3 SECTION SIGNAL HOUSING (12" LED)
	3	ONE WAY, 5 SECTION SIGNAL HOUSING (12" LED)
	8	TRAFFIC SIGNAL BACKPLATES
	8	INTERNATIONAL SYMBOL PEDESTRIAN HOUSING WITH COUNTDOWN (16" LED)
	5	PEDESTRIAN PUSHBUTTON w/ SIGN AND SADDLE (ADA COMPLIANT 2" BUTTON)
	2	OPTICAL DETECTOR (SINGLE CHANNEL)
	1	CONFIRMATION STROBE (CLEAR)
	13	SINGLE CHANNEL LOOP DETECTOR AMPLIFIER (2SP)
	1	4 CHANNEL PHASE SELECTOR
	2	BIU (1 SPARE)
811.31	8	12 in x 12 in PULLBOX (SD2.031) EACH
804.3	415	3-INCH ELECTRICAL CONDUIT, TYPE NM-PLALSTC (UL) FOOT
PLUS ALL NECESSARY DUCT, CABLE, LABOR, MISCELLANEOUS MATERIALS AND EQUIPMENT TO COMPLETE THE INSTALLATION AND PROVIDE AN OPERATING TRAFFIC CONTROL SIGNAL		

DETECTOR NUMBER	AMPLIFIER NUMBER	CHANNEL NUMBER	LOOP SIZE	NUM. OF TURNS	Ø CALLED	Ø EXT.	MODE A=PULSE B=PRES.	DELAY TIME	EXT. TIME
1	1	1	1@6'x20'	2-4-2	Ø1	Ø1+6	B	0	0
2	1	2	1@6'x20'	2-4-2	Ø6	Ø6	B	0	0
3	2	1	1@6'x20'	2-4-2	Ø4	Ø4	B	0	0
4	3	1	1@6'x20'	2-4-2	Ø2	Ø2	B	0	0
5	3	1	1@6'x20'	2-4-2	Ø2	Ø2	B	5	0
6	4	1	1@6'x20'	2-4-2	Ø8	Ø8	B	0	0
B1	5	1	1@6'x20'	2-4-2			B	0	0
B2	5	2	1@6'x20'	2-4-2			B	0	0
B3	6	1	1@6'x20'	2-4-2			B	0	0
B4	7	1	1@6'x20'	2-4-2			B	0	0
B5	7	2	1@6'x20'	2-4-2			B	0	0
B6	8	1	1@6'x20'	2-4-2			B	0	0
B7	8	2	1@6'x20'	2-4-2			B	5	0

EMERGENCY PRE-EMPTION DATA			
APPROACH	DETECTOR	PHASE	TIME (SEC.)
BEALE ST. SB	OP1	Ø3 + Ø8	MIN. 10 MAX. 120
ADAMS ST. WB	OP2	Ø2	MIN. 10 MAX. 120

SHEET T-1

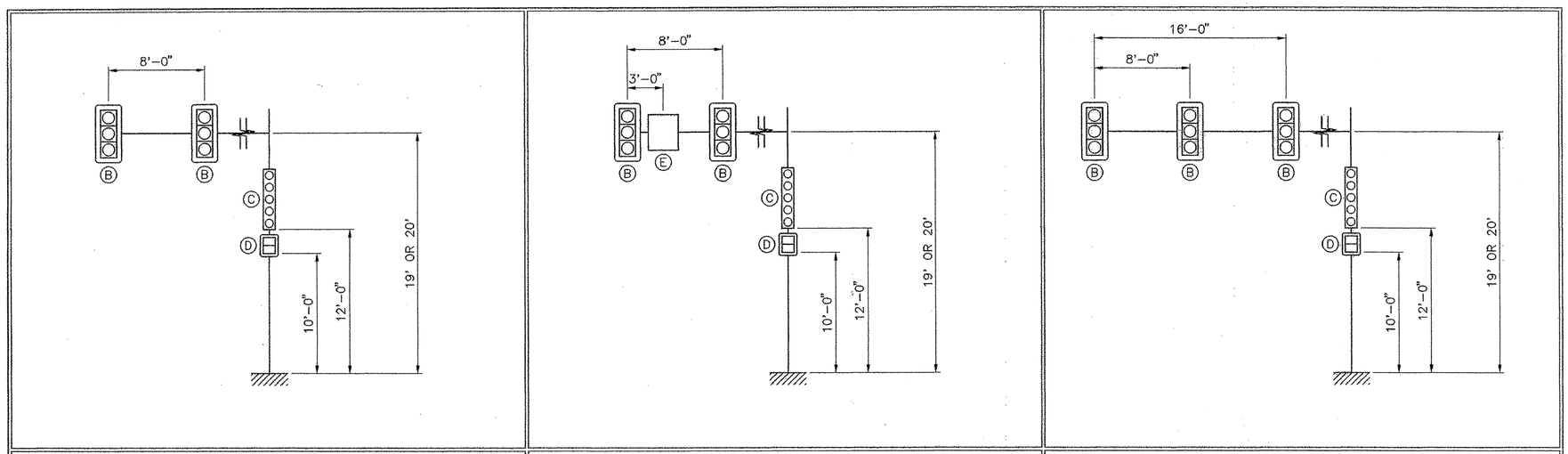

20', 25', 40' & 45' SPANS | 30' SPAN | 35' SPAN

LOAD DEFINITIONS – LIGHT LOADS

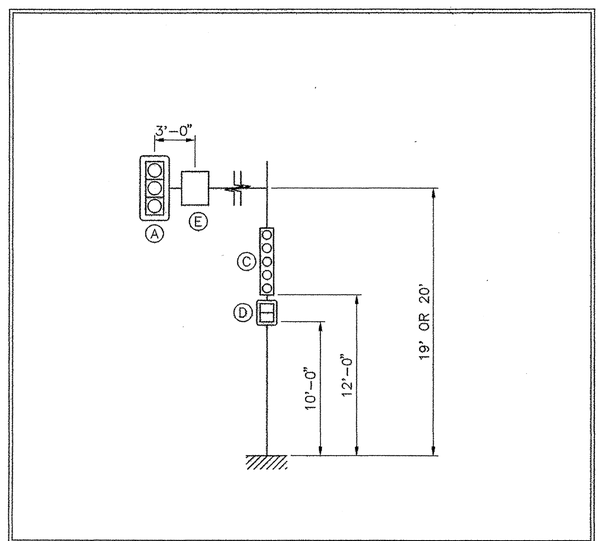

15' SPAN

SHORT SPAN LOADING

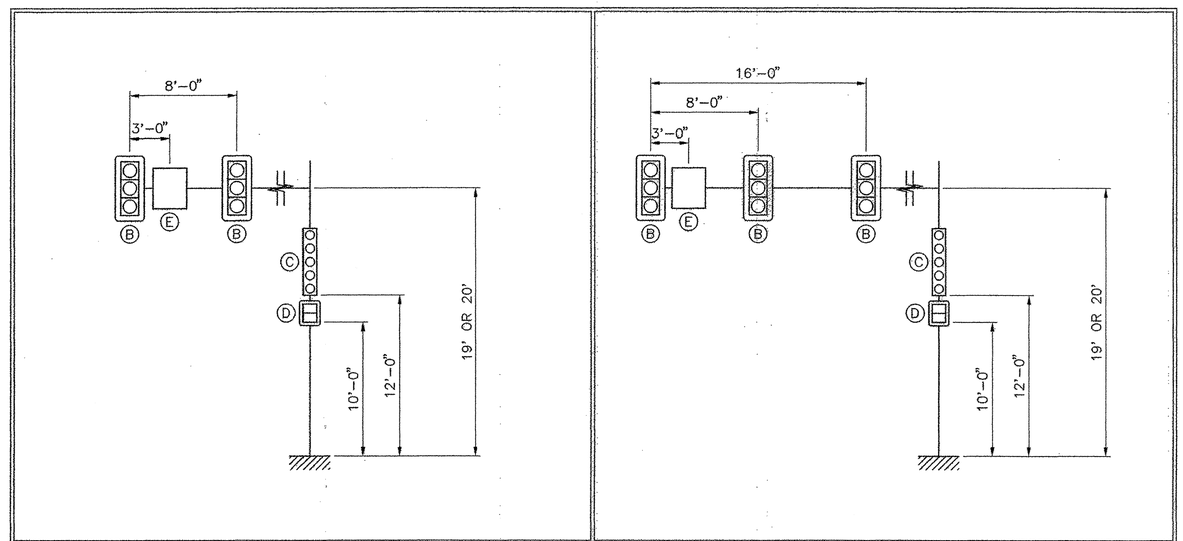

20' & 25' SPANS | 30', 35', 40' & 45' SPANS

LOAD DEFINITIONS – MEDIUM LOADS

DEVICE	DESCRIPTION	PROJ. AREA (FT~2)	WEIGHT (LBS)
A	3 SECTION, 3 WAY SIGNAL	13.50	202
B	3 SECTION, 1 WAY SIGNAL	8.67	74
C	5 SECTION, 1 WAY SIGNAL	13.33	110
D	DUAL PEDESTRIAN SIGNAL	8.00	80
E	30" X 36" REGULATORY SIGN	7.50	23

NOTE: ALL SIGNALS HAVE 5.0" BACKPLATES

ISSUED FOR CONSTRUCTION

massDOT Highway

STANDARD DRAWINGS

TYPE II MAST ARMS
LIGHT, MEDIUM & SHORT SPAN
LOAD DIAGRAMS

MASSACHUSETTS DEPARTMENT OF TRANSPORTATION
HIGHWAY DIVISION
10 PARK PLAZA BOSTON, MASS

2/24/2011
CHIEF ENGINEER

BRIDGE ENGINEER

TRAFFIC ENGINEER

SHEET T-2

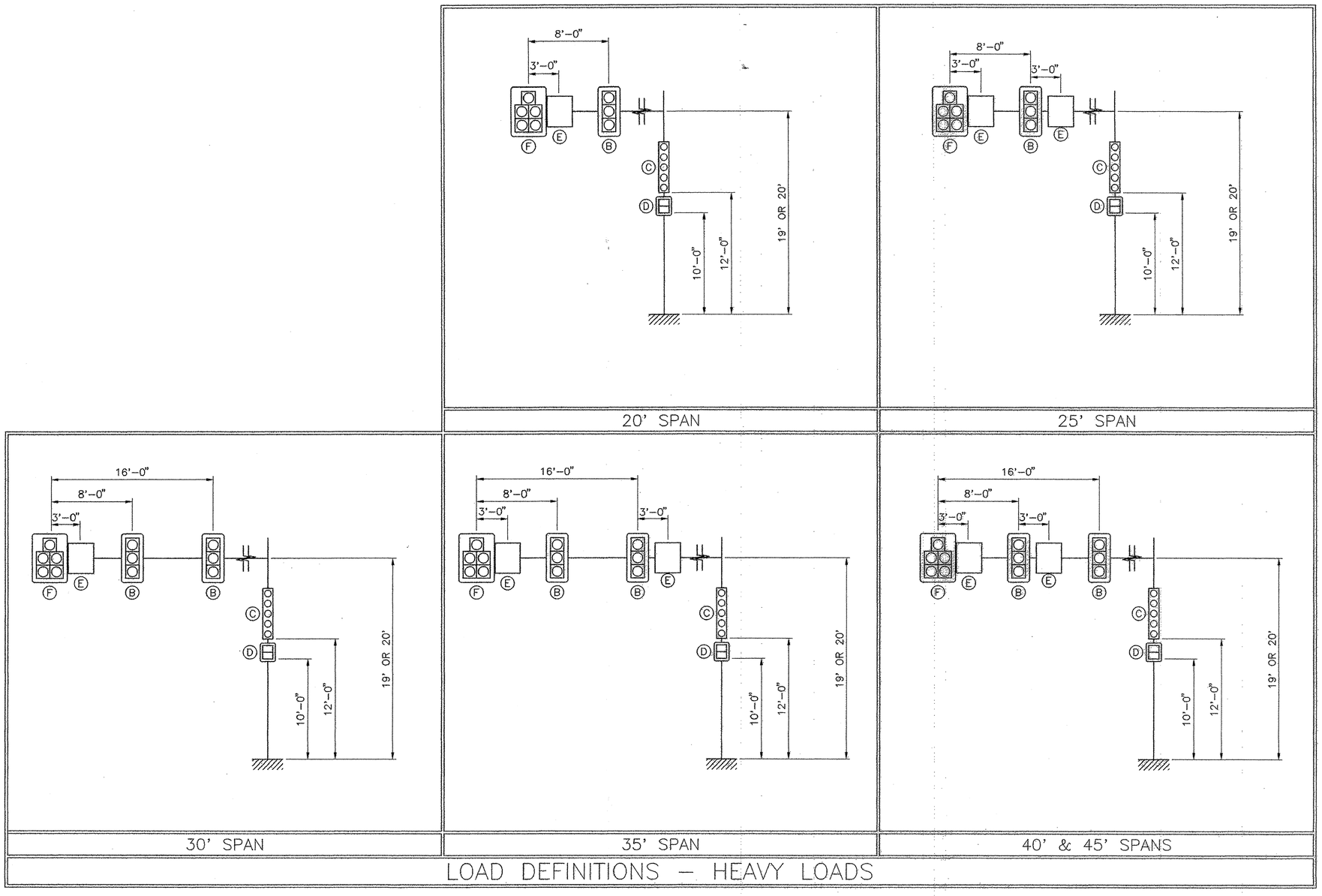

20' SPAN

25' SPAN

30' SPAN

35' SPAN

40' & 45' SPANS

LOAD DEFINITIONS – HEAVY LOADS

DEVICE	DESCRIPTION	PROJ. AREA (FT^2)	WEIGHT (LBS)
A	3 SECTION, 3 WAY SIGNAL	18.29	202
B	3 SECTION, 1 WAY SIGNAL	8.67	74
C	5 SECTION, 1 WAY SIGNAL	13.33	110
D	DUAL PEDESTRIAN SIGNAL	8.00	80
E	30" X 36" REGULATORY SIGN	7.50	23
F	5 SECTION, 2 WAY SIGNAL	21.95	215

NOTE: ALL SIGNALS HAVE 5.0" BACKPLATES

ISSUED FOR CONSTRUCTION

massDOT Highway

STANDARD DRAWINGS

TYPE II MAST ARMS
HEAVY LOAD DIAGRAMS

MASSACHUSETTS DEPARTMENT OF TRANSPORTATION
HIGHWAY DIVISION
10 PARK PLAZA BOSTON, MASS

2/24/2011
CHIEF ENGINEER

BRIDGE ENGINEER

TRAFFIC ENGINEER

SHEET T-3

Jacobs - P:\QUINCY\2011\E2X56000\700 CADD\702-Civil\Final Submission\16-19_MAST ARM DETAILS.dwg June 07, 2013

PIER FOUNDATIONS FOR 110 MPH WIND SPEED ZONE

LIGHT LOADING CONDITIONS

SOIL TYPE	15' & 20' MAST ARMS			25' & 30' MAST ARMS			35' & 40' MAST ARMS			45' MAST ARMS		
	DIAMETER	DEPTH	VERTICAL BARS	DIAMETER	DEPTH	VERTICAL BARS	DIAMETER	DEPTH	VERTICAL BARS	DIAMETER	DEPTH	VERTICAL BARS
DRY SAND	3'–6"	6'–0"	18–#8	3'–6"	8'–0"	18–#8	3'–6"	8'–0"	18–#8	3'–6"	9'–0"	18–#8
WET SAND	3'–6"	7'–0"	18–#8	3'–6"	9'–0"	18–#8	3'–6"	9'–0"	18–#8	3'–6"	9'–0"	18–#8
CLAY (MEDIUM STIFF)	3'–6"	11'–0"	18–#8	3'–6"	12'–0"	18–#8	3'–6"	12'–0"	18–#8	3'–6"	12'–0"	18–#8
ALLUVIAL	3'–6"	8'–0"	18–#8	3'–6"	10'–0"	18–#8	3'–6"	10'–0"	18–#8	3'–6"	11'–0"	18–#8

MEDIUM LOADING CONDITIONS

SOIL TYPE	15' & 20' MAST ARMS			25' & 30' MAST ARMS			35' & 40' MAST ARMS			45' MAST ARMS		
	DIAMETER	DEPTH	VERTICAL BARS	DIAMETER	DEPTH	VERTICAL BARS	DIAMETER	DEPTH	VERTICAL BARS	DIAMETER	DEPTH	VERTICAL BARS
DRY SAND	3'–6"	7'–0"	18–#8	3'–6"	9–0"	18–#8	4'–0"	9–0"	18–#9	4'–6"	8'–0"	18–#10
WET SAND	3'–6"	8'–0"	18–#8	3'–6"	9'–0"	18–#8	4'–0"	10'–0"	18–#9	4'–6"	9'–0"	18–#10
CLAY (MEDIUM STIFF)	3'–6"	11'–0"	18–#8	3'–6"	12'–0"	18–#8	4'–0"	13'–0"	18–#9	4'–6"	14'–0"	18–#10
ALLUVIAL	3'–6"	9'–0"	18–#8	3'–6"	10'–0"	18–#8	4'–0"	11'–0"	18–#9	4'–6"	10'–0"	18–#10

HEAVY LOADING CONDITIONS

SOIL TYPE	15' & 20' MAST ARMS			25' & 30' MAST ARMS			35' & 40' MAST ARMS			45' MAST ARMS		
	DIAMETER	DEPTH	VERTICAL BARS	DIAMETER	DEPTH	VERTICAL BARS	DIAMETER	DEPTH	VERTICAL BARS	DIAMETER	DEPTH	VERTICAL BARS
DRY SAND	3'–6"	8'–0"	18–#8	4'–0"	9'–0"	18–#9	4'–6"	10'–0"	18–#10	5'–0"	9'–0"	23–#10
WET SAND	3'–6"	8'–0"	18–#8	4'–0"	10'–0"	18–#9	4'–6"	11'–0"	18–#10	5'–0"	10'–0"	23–#10
CLAY (MEDIUM STIFF)	3'–6"	12'–0"	18–#8	4'–0"	14'–0"	18–#9	4'–6"	15'–0"	18–#10	5'–0"	16'–0"	23–#10
ALLUVIAL	3'–6"	10'–0"	18–#8	4'–0"	11'–0"	18–#9	4'–6"	12'–0"	18–#10	5'–0"	12'–0"	23–#10

PIER FOUNDATIONS FOR 130 MPH WIND SPEED ZONE

LIGHT LOADING CONDITIONS

SOIL TYPE	15' & 20' MAST ARMS			25' & 30' MAST ARMS			35' & 40' MAST ARMS			45' MAST ARMS		
	DIAMETER	DEPTH	VERTICAL BARS	DIAMETER	DEPTH	VERTICAL BARS	DIAMETER	DEPTH	VERTICAL BARS	DIAMETER	DEPTH	VERTICAL BARS
DRY SAND	3'–6"	7'–0"	18–#8	3'–6"	9'–0"	18–#8	3'–6"	10'–0"	18–#8	3'–6"	10'–0"	18–#8
WET SAND	3'–6"	8'–0"	18–#8	3'–6"	10'–0"	18–#8	3'–6"	11'–0"	18–#8	3'–6"	11'–0"	18–#8
CLAY (MEDIUM STIFF)	3'–6"	12'–0"	18–#8	3'–6"	13'–0"	18–#8	3'–6"	13'–0"	18–#8	3'–6"	13'–0"	18–#8
ALLUVIAL	3'–6"	9'–0"	18–#8	3'–6"	12'–0"	18–#8	3'–6"	12'–0"	18–#8	3'–6"	13'–0"	18–#8

MEDIUM LOADING CONDITIONS

SOIL TYPE	15' & 20' MAST ARMS			25' & 30' MAST ARMS			35' & 40' MAST ARMS			45' MAST ARMS		
	DIAMETER	DEPTH	VERTICAL BARS	DIAMETER	DEPTH	VERTICAL BARS	DIAMETER	DEPTH	VERTICAL BARS	DIAMETER	DEPTH	VERTICAL BARS
DRY SAND	3'–6"	8'–0"	18–#8	3'–6"	10'–0"	18–#8	4'–0"	11'–0"	18–#9	4'–6"	10'–0"	18–#10
WET SAND	3'–6"	8'–0"	18–#8	3'–6"	11'–0"	18–#8	4'–0"	12'–0"	18–#9	4'–6"	11'–0"	18–#10
CLAY (MEDIUM STIFF)	3'–6"	12'–0"	18–#8	3'–6"	14'–0"	18–#8	4'–0"	15'–0"	18–#9	4'–6"	15'–0"	18–#10
ALLUVIAL	3'–6"	10'–0"	18–#8	3'–6"	13'–0"	18–#8	4'–0"	13'–0"	18–#9	4'–6"	12'–0"	18–#10

HEAVY LOADING CONDITIONS

SOIL TYPE	15' & 20' MAST ARMS			25' & 30' MAST ARMS			35' & 40' MAST ARMS			45' MAST ARMS		
	DIAMETER	DEPTH	VERTICAL BARS	DIAMETER	DEPTH	VERTICAL BARS	DIAMETER	DEPTH	VERTICAL BARS	DIAMETER	DEPTH	VERTICAL BARS
DRY SAND	3'–6"	9'–0"	18–#8	4'–0"	11'–0"	18–#9	4'–6"	12'–0"	18–#10	5'–0"	11'–0"	23–#10
WET SAND	3'–6"	10'–0"	18–#8	4'–0"	12'–0"	18–#9	4'–6"	13'–0"	18–#10	5'–0"	12'–0"	23–#10
CLAY (MEDIUM STIFF)	3'–6"	14'–0"	18–#8	4'–0"	15'–0"	18–#9	4'–6"	16'–0"	18–#10	5'–0"	17'–0"	23–#10
ALLUVIAL	3'–6"	11'–0"	18–#8	4'–0"	13'–0"	18–#9	4'–6"	15'–0"	18–#10	5'–0"	14'–0"	23–#10

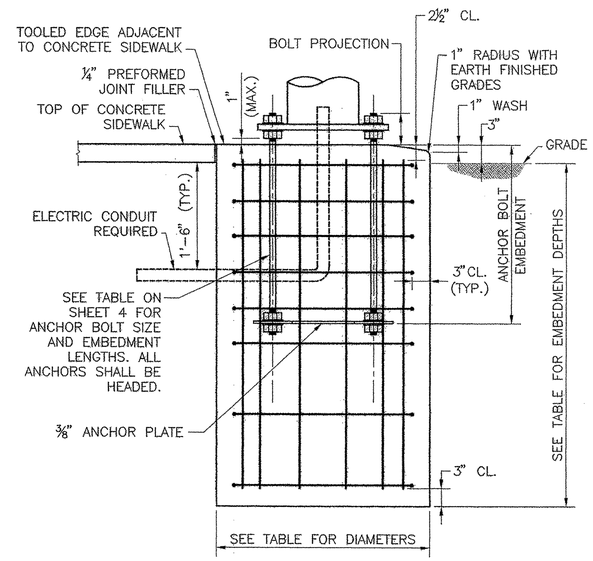

PIER FOUNDATION DETAIL

NO SCALE

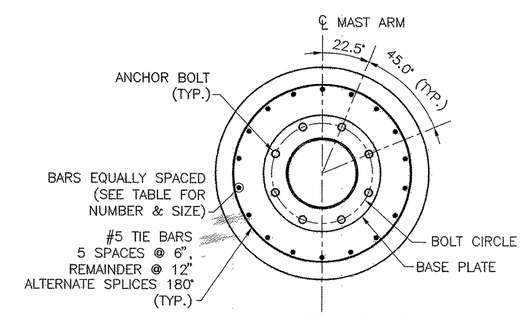

PIER FOUNDATION PLAN

NO SCALE

NOTES:

1. FOUNDATIONS SHALL BE 4000 PSI, 1½", 565 CEMENT CONCRETE.
2. REINFORCEMENT SHALL BE ASTM A615 GRADE 60.
3. ANCHOR BOLTS SHALL BE SET BY TEMPLATE.
4. PROVIDE FOR ELECTRICAL CONDUIT.
5. EXCAVATION SHALL BE BY THE AUGER METHOD TO THE NEAT LINES OF THE OUTSIDE DIMENSION OF THE FOUNDATIONS WITHOUT DISTURBING THE SOIL AROUND AND BELOW THE PROPOSED FOUNDATION BOTTOM. ALTERNATE METHODS OF EXCAVATION MAY BE SUBMITTED TO MASSHIGHWAY FOR APPROVAL IF THEY MEET THE REQUIREMENTS LISTED IN NOTES 6, 7, AND 8.
6. THE EARTH WALLS OF THE FOUNDATION SHALL BE ADEQUATELY AND SECURELY PROTECTED AT ALL TIMES AGAINST CAVE–INS, DISPLACEMENT OF THE SURROUNDING EARTH AND FOR THE EXCLUSION OF GROUND WATER. THIS MAY BE DONE BY THE USE OF STEEL CYLINDER LINERS OR CASINGS THAT ARE APPROVED BY MASSHIGHWAY. IF LINERS ARE USED THEY MAY BE RECLAIMED PROVIDED THAT THEY ARE WITHDRAWN AS THE CONCRETE IS BEING PLACED, MAINTAINING A SUFFICIENT HEAD OF CONCRETE WITHIN THE LINER TO PREVENT REDUCTION IN THE FOUNDATION DIAMETER AND TO PREVENT EXTRANEOUS MATERIAL FROM FALLING IN FROM THE SIDES AND MIXING WITH THE CONCRETE.
7. IF THE SOIL IS DISTURBED OR REMOVED BEYOND THE NEAT LINES OF THE OUTSIDE DIMENSION OF THE FOUNDATION, IT SHALL BE REPLACED WITH CONCRETE. ANY ADDITIONAL COST FOR THE CONCRETE SHALL BE PAID FOR BY THE CONTRACTOR.
8. SPECIAL CARE SHOULD BE GIVEN TO AREAS WHERE WET SOIL IS ENCOUNTERED, TO INSURE THAT THE PREAUGERED HOLE DOES NOT COLLAPSE. THIS MAY REQUIRE THE USE OF STEEL CYLINDER LINERS OR CASINGS TO HOLD THE SOIL IN PLACE UNTIL READY FOR CONCRETE PLACEMENT. THE STEEL CYLINDERS OR CASINGS SHALL BE WITHDRAWN AS THE FOUNDATION CONCRETE IS PLACED.
9. DETERMINATION OF EXISTING SOIL CONDITIONS SHALL BE MADE BY THE DESIGN ENGINEER.
10. IF LEDGE OR POOR SOIL IS ENCOUNTERED (i.e. ONE WHICH DOES NOT APPLY TO THE DESIGN TABLES SHOWN ON THIS SHEET), AN ALTERNATIVE DESIGN SHALL BE PROVIDED BY THE DESIGN ENGINEER. DECISIONS MADE IN NOTES 8 AND 9 SHALL BE SUBMITTED TO MASSHIGHWAY FOR APPROVAL. IF UTILITIES OR OTHER UNDERGROUND OBSTRUCTIONS ARE ENCOUNTERED, THE CONTRACTOR SHALL BACKFILL THE AREA TO ITS ORIGINAL CONDITION UNTIL AN ALTERNATE DESIGN HAS BEEN PROVIDED BY THE ENGINEER.

ISSUED FOR CONSTRUCTION

massDOT Highway

STANDARD DRAWINGS

TYPE II MAST ARMS
CORED PIER FOUNDATIONS

MASSACHUSETTS DEPARTMENT OF TRANSPORTATION
HIGHWAY DIVISION
10 PARK PLAZA BOSTON, MASS

2/24/2011
CHIEF ENGINEER

BRIDGE ENGINEER

TRAFFIC ENGINEER

SHEET T-4

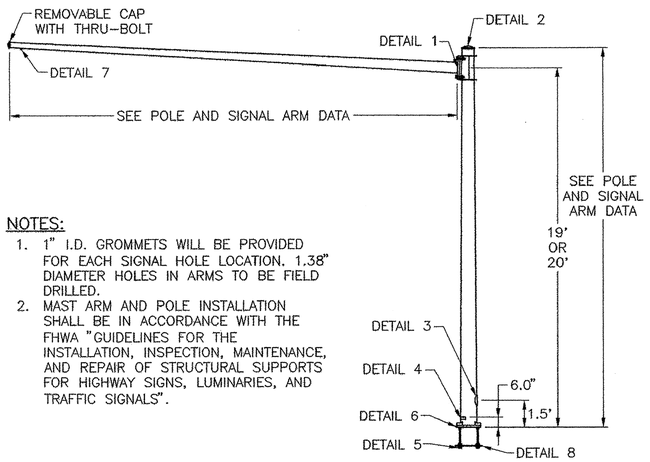

NOTES:

1. 1" I.D. GROMMETS WILL BE PROVIDED FOR EACH SIGNAL HOLE LOCATION. 1.38" DIAMETER HOLES IN ARMS TO BE FIELD DRILLED.
2. MAST ARM AND POLE INSTALLATION SHALL BE IN ACCORDANCE WITH THE FHWA "GUIDELINES FOR THE INSTALLATION, INSPECTION, MAINTENANCE, AND REPAIR OF STRUCTURAL SUPPORTS FOR HIGHWAY SIGNS, LUMINARIES, AND TRAFFIC SIGNALS".

MAST ARM ELEVATION

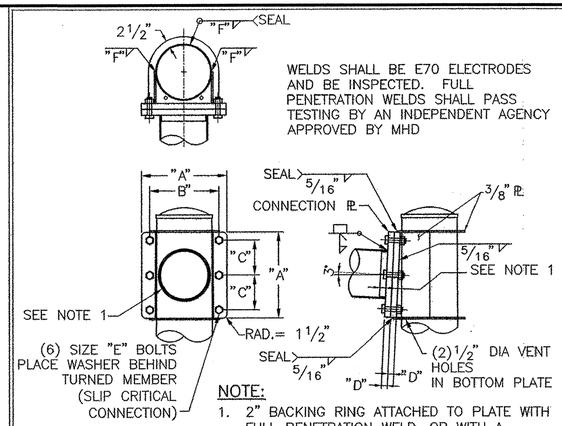

WELDS SHALL BE E70 ELECTRODES AND BE INSPECTED. FULL PENETRATION WELDS SHALL PASS TESTING BY AN INDEPENDENT AGENCY APPROVED BY MHD

NOTE:

1. 2" BACKING RING ATTACHED TO PLATE WITH FULL PENETRATION WELD, OR WITH A CONTINUOUS FILLET WELD AROUND INTERIOR FACE OF BACKING RING. THE THICKNESS OF THE BACKING RING SHALL NOT EXCEED 3/8" WITH FILLET WELD ATTACHMENT TO PLATE.

DETAIL 1 | SIGNAL ARM ATTACHMENT

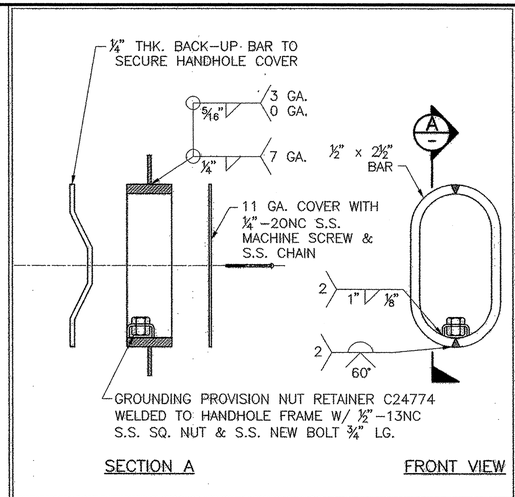

DETAIL 3 | 4"x8" HANDHOLE

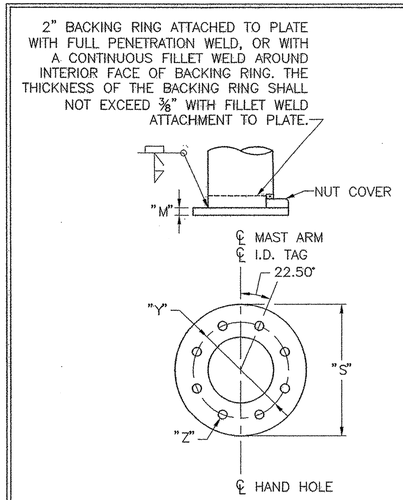

DETAIL 6 | POLE BASE

MATERIAL DATA

COMPONENT	DESIGNATION	YIELD (KSI)	COMPONENT	DESIGNATION	YIELD (KSI)
POLE TUBE	ASTM A595 GR. A	55	ARM TUBE	ASTM A595 GR. A	55
POLE BASE PLATE	AASHTO M270	50	ARM CONNECTION PLATE	AASHTO M270	50
ANCHOR BOLTS	AASHTO M314	55	ARM CONNECTING BOLTS	AASHTO M164 **	
GALVANIZING	AASHTO M111 OR M232				

** BOLTS WHICH ACCUMULATE RUST OR DIRT SHALL BE DISCARDED.

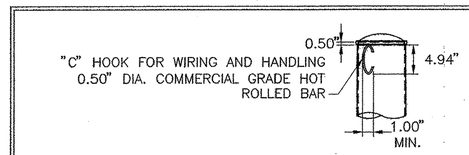

DETAIL 2 | POLE TOP

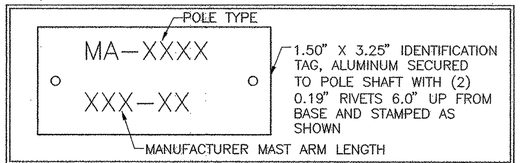

DETAIL 4 | I.D. TAG

POLE AND SIGNAL ARM DATA – LIGHT LOADS

LOCATIONS	SIGNAL ARM TUBE				POLE TUBE				POLE BASE				ANCHOR BOLT		SIGNAL ARM ATTACHMENT DATA					
	SPAN (FT)	FIXED END DIA. (IN)	FREE END DIA. (IN)	WALL THK.	BASE DIA. (IN)	TOP DIA. (IN)	LENGTH (FT)	WALL THK.	PLATE CIRCLE "S" (IN)	BOLT CIRCLE "Y" (IN)	THK. "M" (IN)	HOLE "Z" (IN)	DIA. "K" (IN)	EMBED. LENGTH "J" (IN)	"A" (IN)	"B" (IN)	"C" (IN)	"D" (IN)	"E" (IN)	"F" (IN)
	15.00	9.00	6.90	7 GA.	12.00	9.06	21.00	7 GA.	29.50	24.00	1.50	1.813	1.50	36.00	19.00	15.00	7.50	1.00	1.00	0.188
	20.00	9.00	6.20	7 GA.	12.00	9.06	21.00	7 GA.	29.50	24.00	1.50	1.813	1.50	36.00	19.00	15.00	7.50	1.00	1.00	0.188
	25.00	10.00	6.50	7 GA.	13.00	10.06	21.00	7 GA.	29.50	24.00	1.50	1.813	1.50	36.00	20.00	16.00	8.00	1.00	1.00	0.188
	30.00	12.50	8.30	3 GA.	15.50	12.56	21.00	3 GA.	29.50	24.00	1.50	1.813	1.50	36.00	23.50	19.00	9.50	1.25	1.25	0.250
	35.00	13.00	8.10	3 GA.	16.00	13.06	21.00	3 GA.	29.50	24.00	1.50	1.813	1.50	36.00	24.50	20.00	10.00	1.25	1.25	0.250
	40.00	13.00	7.40	3 GA.	16.00	13.06	21.00	3 GA.	29.50	24.00	1.50	1.813	1.50	36.00	24.50	20.00	10.00	1.25	1.25	0.250
	45.00	13.50	7.20	3 GA.	16.50	13.56	21.00	3 GA.	29.50	24.00	1.50	1.813	1.50	36.00	27.50	22.00	11.00	1.50	1.50	0.313

POLE AND SIGNAL ARM DATA – MEDIUM LOADS

LOCATIONS	SIGNAL ARM TUBE				POLE TUBE				POLE BASE				ANCHOR BOLT		SIGNAL ARM ATTACHMENT DATA					
	SPAN (FT)	FIXED END DIA. (IN)	FREE END DIA. (IN)	WALL THK.	BASE DIA. (IN)	TOP DIA. (IN)	LENGTH (FT)	WALL THK.	PLATE CIRCLE "S" (IN)	BOLT CIRCLE "Y" (IN)	THK. "M" (IN)	HOLE "Z" (IN)	DIA. "K" (IN)	EMBED. LENGTH "J" (IN)	"A" (IN)	"B" (IN)	"C" (IN)	"D" (IN)	"E" (IN)	"F" (IN)
	15.00	9.00	6.90	7 GA.	12.00	9.06	21.00	7 GA.	29.50	24.00	1.50	1.813	1.50	36.00	19.00	15.00	7.50	1.00	1.00	0.188
	20.00	10.00	7.20	3 GA.	13.00	10.06	21.00	3 GA.	29.50	24.00	1.50	1.813	1.50	36.00	20.00	16.00	8.00	1.00	1.00	0.250
	25.00	11.00	7.50	3 GA.	14.00	11.06	21.00	3 GA.	29.50	24.00	1.50	1.813	1.50	36.00	23.50	19.00	9.50	1.25	1.25	0.250
	30.00	13.00	8.80	3 GA.	16.00	13.06	21.00	3 GA.	29.50	24.00	1.50	1.813	1.50	36.00	23.50	19.00	9.50	1.25	1.25	0.250
	35.00	14.00	9.10	3 GA.	17.00	14.06	21.00	3 GA.	29.50	24.00	1.50	1.813	1.50	36.00	27.50	22.00	11.00	1.50	1.50	0.250
	40.00	15.00	9.40	3 GA.	18.00	15.06	21.00	3 GA.	29.50	24.00	1.50	1.813	1.50	36.00	27.50	22.00	11.00	1.50	1.50	0.250
	45.00	16.00	9.70	0 GA.	19.00	16.06	21.00	0 GA.	29.50	24.00	1.50	1.813	1.50	36.00	29.50	24.00	12.00	1.75	1.50	0.313

POLE AND SIGNAL ARM DATA – HEAVY LOADS

LOCATIONS	SIGNAL ARM TUBE				POLE TUBE				POLE BASE				ANCHOR BOLT		SIGNAL ARM ATTACHMENT DATA					
	SPAN (FT)	FIXED END DIA. (IN)	FREE END DIA. (IN)	WALL THK.	BASE DIA. (IN)	TOP DIA. (IN)	LENGTH (FT)	WALL THK.	PLATE CIRCLE "S" (IN)	BOLT CIRCLE "Y" (IN)	THK. "M" (IN)	HOLE "Z" (IN)	DIA. "K" (IN)	EMBED. LENGTH "J" (IN)	"A" (IN)	"B" (IN)	"C" (IN)	"D" (IN)	"E" (IN)	"F" (IN)
	15.00	9.00	6.90	7 GA.	12.00	9.06	21.00	7 GA.	29.50	24.00	1.50	1.813	1.50	36.00	19.00	15.00	7.50	1.00	1.00	0.188
	20.00	12.50	9.70	3 GA.	15.50	12.56	21.00	3 GA.	29.50	24.00	1.50	1.813	1.50	36.00	24.00	19.00	9.50	1.25	1.25	0.250
	25.00	14.00	10.50	3 GA.	17.00	14.06	21.00	3 GA.	29.50	24.00	1.50	1.813	1.50	36.00	27.50	22.00	11.00	1.50	1.50	0.250
	30.00	15.50	11.30	3 GA.	18.50	15.56	21.00	3 GA.	29.50	24.00	1.50	1.813	1.50	36.00	27.50	22.00	11.00	1.50	1.50	0.250
	35.00	16.50	11.60	0 GA.	19.50	16.56	21.00	0 GA.	34.50	28.00	1.75	2.063	1.75	36.00	29.50	24.00	12.00	1.75	1.50	0.313
	40.00	17.50	11.90	0 GA.	20.50	17.56	21.00	0 GA.	34.50	28.00	1.75	2.063	1.75	36.00	29.50	24.00	12.00	1.75	1.50	0.313
	45.00	18.50	12.20	0 GA.	21.50	18.56	21.00	0 GA.	34.50	28.00	1.75	2.063	1.75	36.00	31.50	26.00	13.00	2.00	1.50	0.313

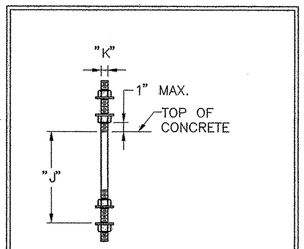

(8) ANCHOR BOLTS WITH (4) HEX NUTS, (4) FLAT WASHERS, AND (1) LOCK-WASHER PER BOLT.

DETAIL 5 | ANCHOR BOLT

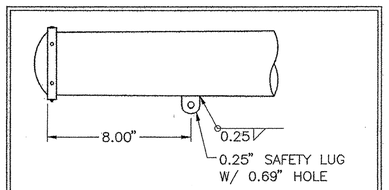

DETAIL 7 | SAFETY HANGER LUG

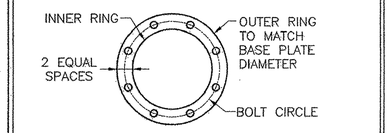

DETAIL 8 | ANCHOR PLATE

ISSUED FOR CONSTRUCTION

massDOT Highway

STANDARD DRAWINGS

TYPE II MAST ARMS DETAILS

MASSACHUSETTS DEPARTMENT OF TRANSPORTATION
HIGHWAY DIVISION
10 PARK PLAZA BOSTON, MASS

2/24/2011
CHIEF ENGINEER
BRIDGE ENGINEER
TRAFFIC ENGINEER

SHEET T-5

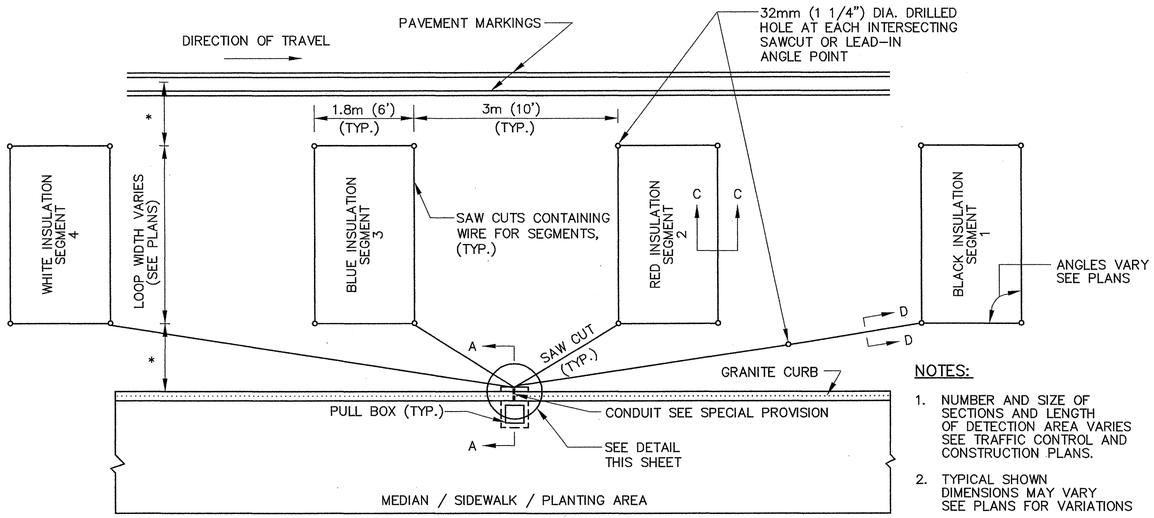

* OFFSETS FROM CURB TO LOOP AND EDGE OF LANE TO LOOP EQUAL IF NOT SHOWN.

NOTES:

1. NUMBER AND SIZE OF SECTIONS AND LENGTH OF DETECTION AREA VARIES SEE TRAFFIC CONTROL AND CONSTRUCTION PLANS.
2. TYPICAL SHOWN DIMENSIONS MAY VARY SEE PLANS FOR VARIATIONS

PLAN OF SEGMENTED DETECTOR DETAIL

NOT TO SCALE

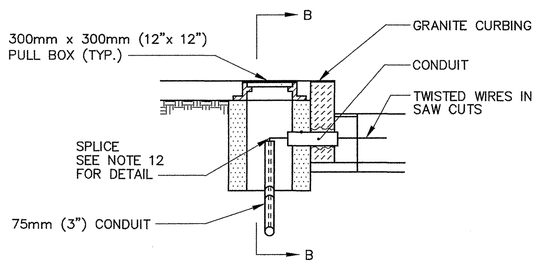

SECTION A–A

NOT TO SCALE

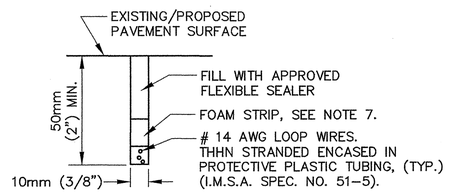

SECTION C–C & D–D

LOOPS IN SURFACE COURSE
NOT TO SCALE

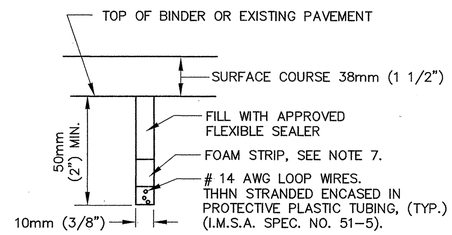

SECTION C–C & D–D

LOOPS IN BINDER COURSE OR
EXISTING PAVEMENT TO BE RESURFACED
NOT TO SCALE

DETECTOR NOTES:

1. IN HANDHOLE, SPLICE ALL SEGMENTS TO TYPE II–SHIELDED LOOP DETECTOR LEAD–IN CABLE. SEGMENTS SHALL BE SPLICED IN PARALLEL, IN SERIES, OR IN A COMBINATION OF PARALLEL & SERIES AS SHOWN ON THE PLAN SHEET FOR EACH DETECTOR. NUMBER OF TURNS OF WIRE SHALL ALSO BE AS SHOWN ON THE PLAN SHEET FOR EACH DETECTOR. SEE NOTE 12.
2. SEE SPECIAL PROVISIONS FOR REQUIREMENTS OF DETECTOR AMPLIFIER.
3. LEAD IN WIRES SHALL BE TWISTED FROM SEGMENT TO SPLICE WITH SHIELDED CABLE FIVE TURNS PER FOOT. LEAD–IN SHALL BE TYPE II (M8. 16. II).
4. BEFORE STARTING ANY SPLICING, THE ELECTRICAL CONTRACTOR SHALL FURNISH DATA SHEETS ON THE MATERIALS AND/OR METHODS TO BE USED IN ACCORDANCE WITH THE DEPARTMENTS STANDARD OPERATING PROCEDURES FOR APPROVAL OF SHOP DRAWINGS SEE SECTION 815.64, ESPECIALLY PARAGRAPH 1.
5. THE METALLIC SHIELD WHICH SHALL ENCASE THE DETECTOR LEADS FROM A SPLICE (TYPICALLY LOCATED IN A PULL BOX NEAR THE ROADWAY COMPONENT OF THE DETECTOR) TO THE CONTROLLER, AND THE DRAIN WIRE UNDER THE METALLIC SHIELD, SHALL NOT BE GROUNDED TO THE EARTH GROUNDING BUSS IN THE CONTROLLER, AND THE SHIELD AND DRAIN WIRE SHALL BE CAREFULLY INSULATED FROM THE TRANSFORMER NEUTRAL OR FROM EARTH GROUND AT ALL POINTS ALONG ITS LENGTH. SPECIFICALLY, THIS INCLUDES CAREFUL INSULATION OF THE EXPOSED PORTION OF THE SHIELD AND THE DRAIN WIRE AT THE END AWAY FROM THE CONTROLLER WHERE IT IS SPLICED TO WIRES LEADING TO THE ROADWAY COMPONENT OF THE DETECTOR. THIS IS IMPORTANT TO AVOID A GROUND RETURN LOOP.
6. FILL ALL CONDUIT OPENINGS WITH DUCT SEAL.
7. AFTER SAWCUTS ARE COMPLETE, BLOW OUT WATER WITH OIL–FREE COMPRESSED AIR UNTIL CUTS ARE CLEAN AND DRY. INSERT WIRE INTO CLEAN SLOT WITH A BLUNT, SMOOTH, ROUND EDGED TOOL OF WOOD OR PLASTIC SUCH AS A PAINT STIRRER. DO NOT USE A SCREWDRIVER, THEN INSERT FOAM PLASTIC HOLD DOWN STRIPS, SIMILAR TO ETHA FOAM SB STRIPS SHALL BE ABOUT 50mm (2") LONG, PLACED IN THE SLOT ABOUT EVERY 2 FEET THEN POUR SEALER, TAKING CARE TO ELIMINATE BUBBLES.
8. THE COMBINED ROADWAY LOOP, TWISTED LEAD–IN WIRES, SPLICE AND SHIELDED LEAD–IN CABLE SHALL HAVE A RESISTANCE TO GROUND OF AT LEAST 100 MEGOHMS. SEE SPECIAL PROVISIONS FOR ADDITIONAL REQUIREMENTS.
9. FOR INSTALLATION OF SINGLE (ONE SEGMENT) SMALL WIRE LOOP DETECTOR DETAIL IS THE SAME.
10. DETECTOR WIRE SHALL BE A DIFFERENT COLOR FOR EACH SEGMENT OF A DETECTOR GROUP. SEE DETAIL.
11. SPLICING PATTERN P = SERIES/PARALLEL: SPLICE SEGMENTS 1 AND 3 OF AN INDIVIDUAL DETECTOR IN SERIES. SPLICE SEGMENTS 2 AND 4 IN SERIES. SPLICE THE RESULTANT TWO GROUPS IN PARALLEL. SPLICE THE RESULTANT COMBINATION TO ONE LEAD–IN CABLE. CONNECT THIS CABLE TO AN OTHERWISE UNUSED AMPLIFIER CHANNEL.
12. SPLICING PATTERN S = SERIES: SPLICE ALL SEGMENTS (TYPICALLY FOUR, BUT MAY BE LESS) OF AN INDIVIDUAL DETECTOR IN SERIES. SPLICE THE RESULTANT COMBINATION TO ONE LEAD–IN CABLE TO AN OTHERWISE UNUSED AMPLIFIER CHANNEL.

REVISED 1/31/1990

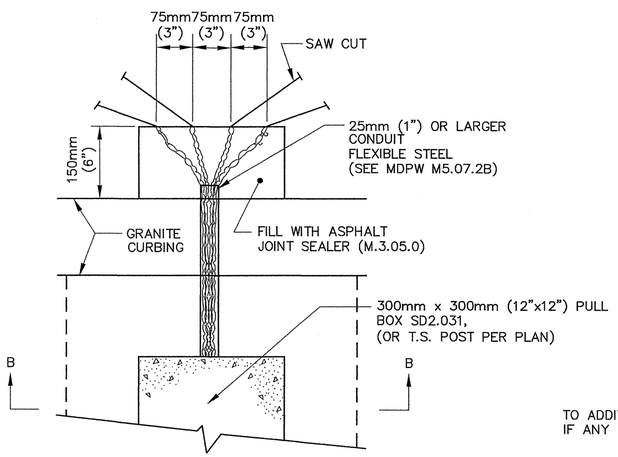

DETAIL – PLAN VIEW

NOT TO SCALE

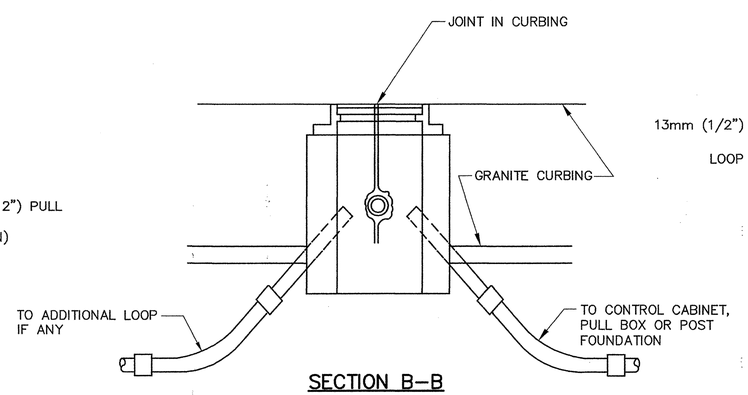

SECTION B–B

NOT TO SCALE

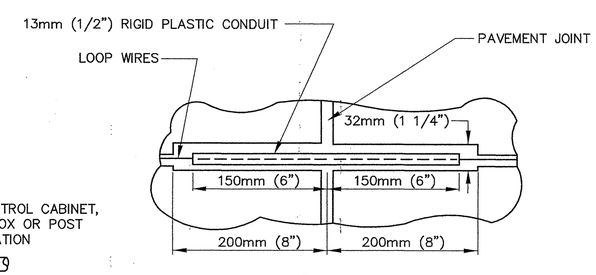

PLAN

TREATMENT AT PAVEMENT JOINTS
NOT TO SCALE

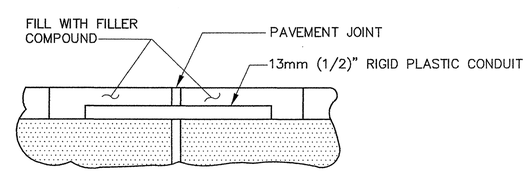

VERTICAL SECTION

TREATMENT AT PAVEMENT JOINTS
NOT TO SCALE

WINDING DETAILS

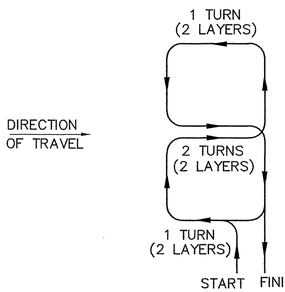

TYPE Q DETECTOR

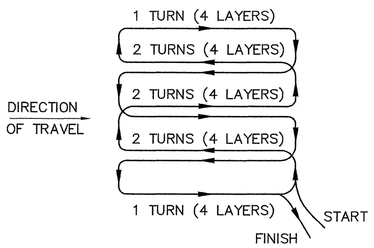

TYPE D–Q DETECTOR

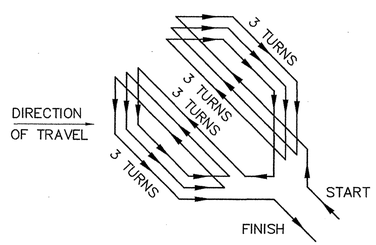

TYPE D–1 DETECTOR

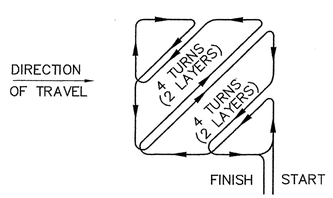

TYPE D–2 DETECTOR

INSTALLATION DETAILS

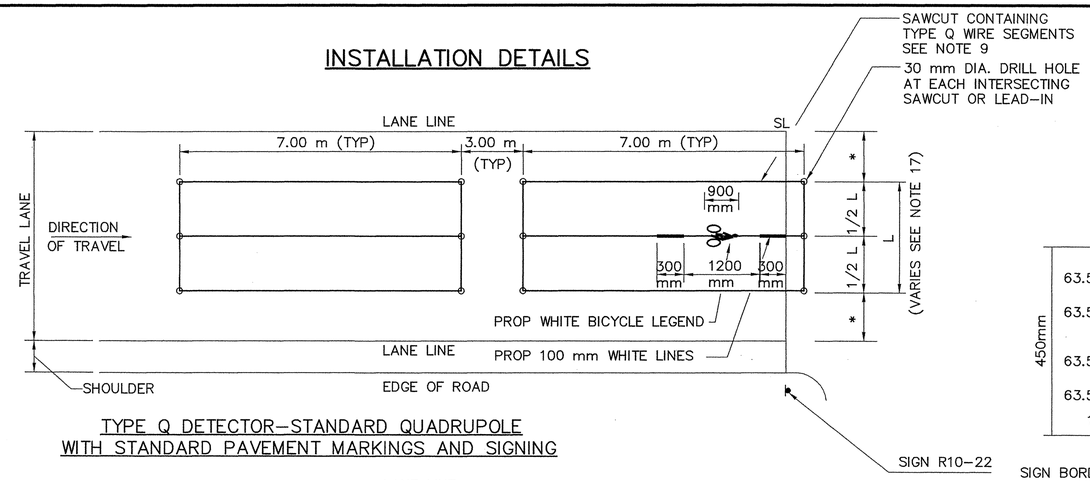

TYPE Q DETECTOR–STANDARD QUADRUPOLE
WITH STANDARD PAVEMENT MARKINGS AND SIGNING

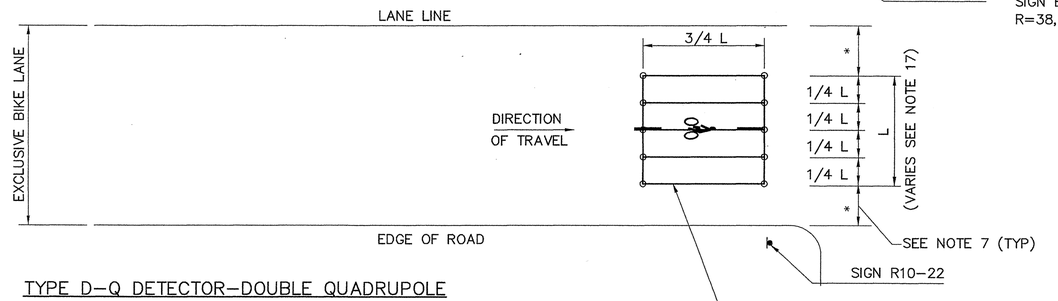

TYPE D–Q DETECTOR–DOUBLE QUADRUPOLE

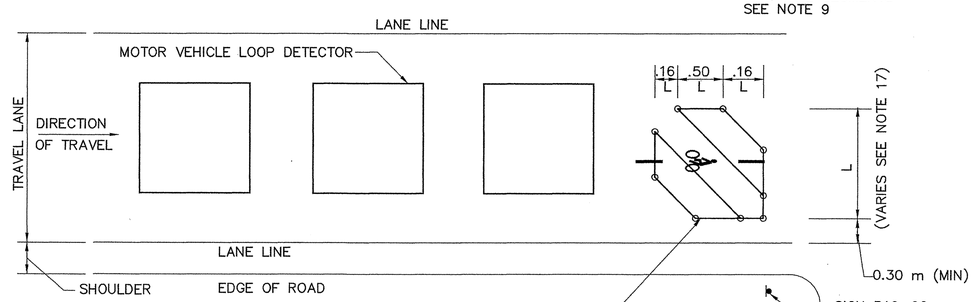

RIGHT JUSTIFIED (SEE NOTE 12)
TYPE D–1 AND D–2 DETECTORS
(TYPE D1 SHOWN)

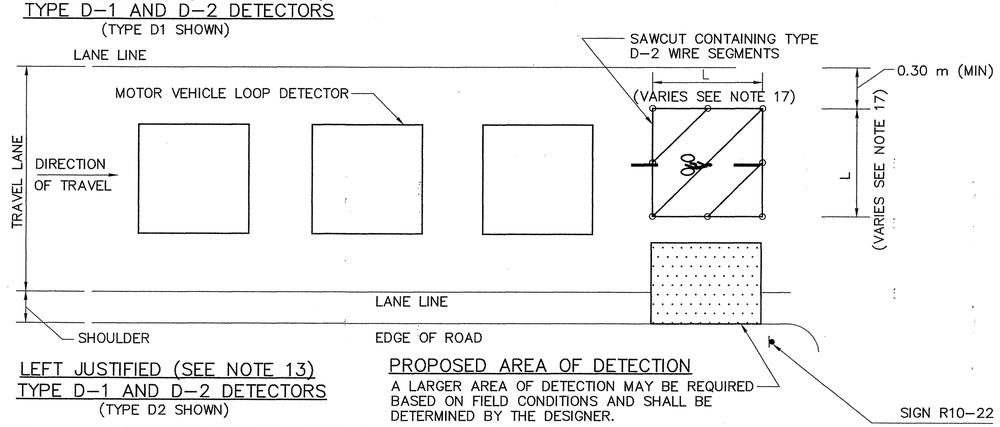

LEFT JUSTIFIED (SEE NOTE 13)
TYPE D–1 AND D–2 DETECTORS
(TYPE D2 SHOWN)

PROPOSED AREA OF DETECTION
A LARGER AREA OF DETECTION MAY BE REQUIRED BASED ON FIELD CONDITIONS AND SHALL BE DETERMINED BY THE DESIGNER.

BICYCLE LOOP DETECTOR DETAILS

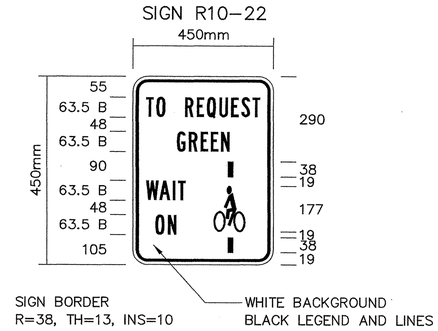

NOTE: ALL SIGN DIMENSIONS IN MILLIMETERS
SIGN PANEL NOT SHOWN TO SCALE

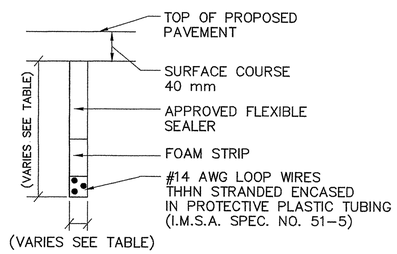

SECTION THRU LOOP DETECTOR

SAWCUT SLOT DEPTH GUIDE		
TURNS OF WIRE	SLOT SIZE	
	DEPTH (mm)	WIDTH (mm)
1	40	13
2	40	13
3	40	13
4	50	13
5	50	13
6	50	13
7	50	13
8	50	13

NOTES:

1. REFER TO VEHICLE LOOP DETECTOR DETAIL SHEET FOR ADDITIONAL NOTES AND CONSTRUCTION DETAILS.
2. ALL DETAILS ARE GRAPHICAL WITH NO SCALE.
3. THE NUMBER, SIZE, LOCATION AND LENGTH OF DETECTION AREA VARIES AND SHALL BE DETERMINED BY THE DESIGNER REFER TO TRAFFIC SIGNAL PLAN.
4. BICYCLE LOOPS SHALL BE CONNECTED TO SEPARATE LOOP DETECTOR AMPLIFIERS CAPABLE OF HIGHER LEVELS OF SENSITIVITY.
5. BICYCLE LOOPS SHALL BE INSTALLED IN THE BASE COURSE OF EXISTING PAVEMENT. THE EXISTING PAVEMENT SHALL BE COLD PLANED TO THE BASE COURSE AND SAWCUT FOR LOOP INSTALLATION.
6. SIGNS AND PAVEMENT MARKINGS SHALL BE INSTALLED FOR ALL BICYCLE DETECTORS TO INFORM CYCLISTS OF THE DETECTION AREA.
7. * OFFSETS FROM LANE LINE EQUAL UNLESS OTHERWISE NOTED. SEE PLANS.
8. TYPE Q DETECTORS SHALL BE WIRED IN A FIGURE EIGHT PATTERN WITH A DOUBLE LAYER DESIGN ("2–4–2") WITH 2 TURNS IN THE PERIMETER SLOTS AND 4 TURNS IN THE CENTER SLOT AS SHOWN IN THE WINDING DETAIL.
9. BICYCLES WILL BE DETECTED WITHIN 100 mm OF THE INTERIOR LONGITUDINAL LOOP WIRES FOR TYPE Q AND D–Q DETECTORS.
10. PROVIDE 3 TURNS FOR TYPE D–1 DETECTORS.
11. INSTALL 2 LAYERS OF WIRE WOUND IN THE SAME DIRECTION IN BOTH LAYERS FOR TYPE D–2 DETECTORS. THE RESULT IS 4 TURNS IN EACH DIAGONAL.
12. RIGHT JUSTIFIED LOOP DETECTORS SHALL BE CONSIDERED FOR THE FOLLOWING CONDITIONS:
    a) BICYCLE STOPPING ON THE RIGHT SIDE OF A THRU TRAVEL LANE.
    b) BICYCLE STOPPING ON THE RIGHT SIDE OF AN EXCLUSIVE LEFT TURN LANE.
13. LEFT JUSTIFIED LOOP DETECTORS SHALL BE CONSIDERED FOR THE FOLLOWING CONDITIONS:
    a) BICYCLE STOPPING ON THE LEFT SIDE OF A SHARED LEFT/THRU LANE.
    b) BICYCLE STOPPING JUST TO THE RIGHT OF THE CENTERLINE WHEN TURNING LEFT ON A TWO–LANE ROADWAY.
14. RECTANGULAR LOOP DETECTORS SHALL BE CONSIDERED FOR BICYCLES STOPPING ON EITHER THE LEFT OR RIGHT SIDE OF A TWO–LANE ROADWAY. THE MINIMUM OFFSET FROM LANE LINE AND CURB LINE SHALL BE 0.30 m.
15. PAVEMENT CORES OR TEST PITS MAY BE REQUIRED TO DETERMINE THE DEPTH OF EXISTING PAVEMENT AND CONFIRM THAT THE DETECTION OPTION CHOSEN AND CORRESPONDING WINDING PATTERN CAN BE ACCOMMODATED.
16. THESE DETAILS APPLY TO BICYCLE LOOPS INSTALLED IN ROADWAYS. PUSH BUTTON ACTUATION SHALL BE CONSIDERED FOR RECREATIONAL BIKE PATHS.
17. THE MINIMUM DIMENSION FOR L SHALL BE 1.8 m MIN. FOR DETECTORS TYPE D–Q, D–1 & D–2. FINAL DIMENSIONS SHALL BE DETERMINED BY THE DESIGN ENGINEER.