CITY OF QUINCY, MASSACHUSETTS
PARK DEPARTMENT
RECONSTRUCTION OF FAXON PARK PLAYGROUND

04/10/2014

PREPARED FOR:

CITY OF QUINCY
PARK DEPARTMENT

LOCATION MAP
1"=500'

PLAN INDEX

SHEET NO.	DESCRIPTION
1	COVER SHEET
2	EXISTING CONDITIONS PLAN
3	SITE PREP. & DEMO. PLAN
4	LAYOUT & MATERIALS PLAN
5	GRADING & UTILITIES PLAN
6	PLAYGROUND DETAILS
7-8	SITE DETAILS

PARK PLANNING ASSOCIATES
14 Capen Street, Milton, MA 02186 617.696.2834
email: pete@parkplanningassociates.com
www.parkplanningassociates.com

BETA Group, Inc.
Engineers • Planners • Landscape Architects
Lincoln, RI - Norwood, MA - Hartford, CT
315 Norwood Park South
Norwood, MA 02062
781.255.1982
email: BETA@BETA-inc.com

REGISTERED PROFESSIONAL ENGINEER DATE

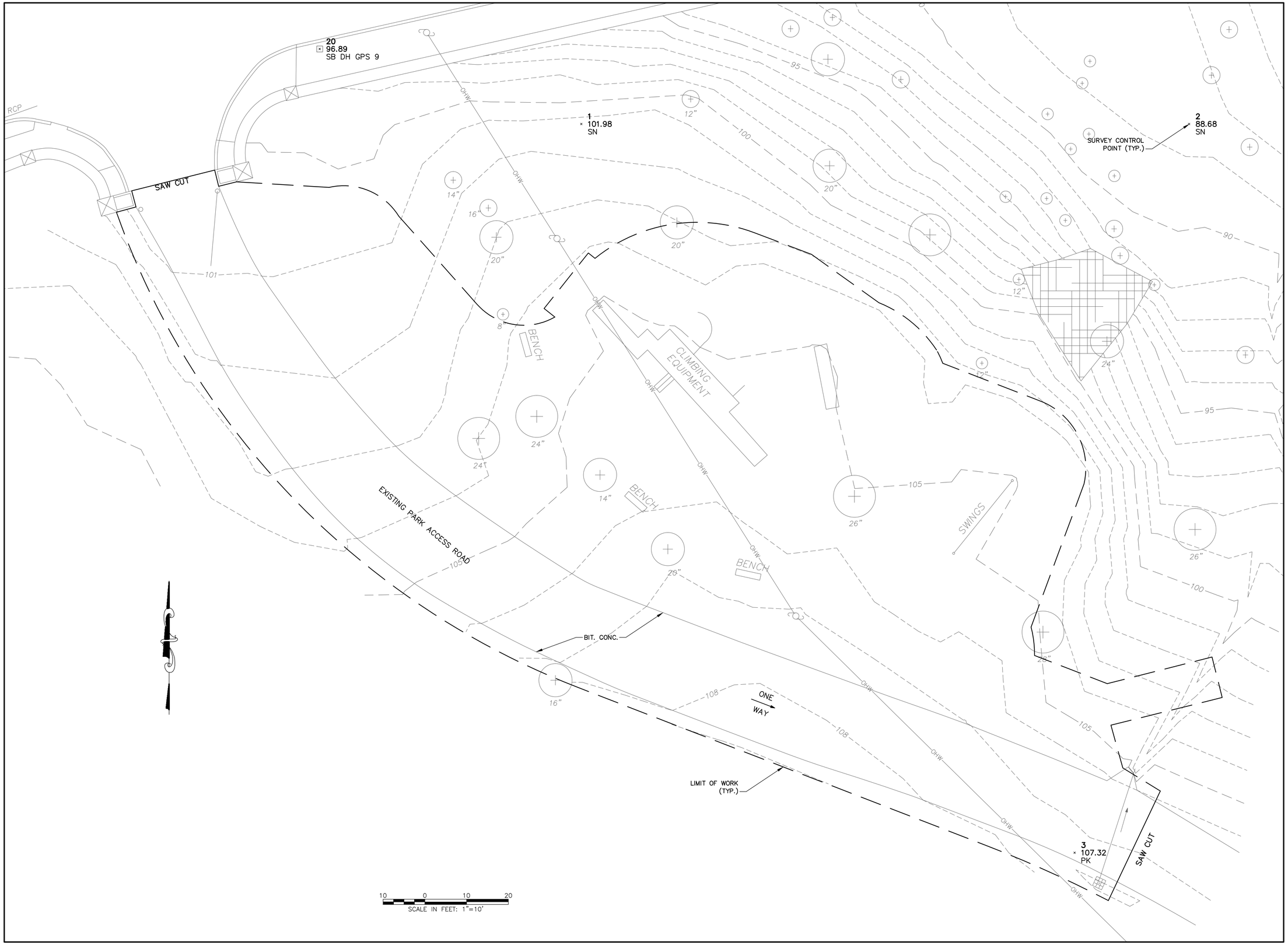

PARK PLANNING ASSOCIATES
14 Capen Street
Milton, MA 02186
617.696.2834(v) 617.696.9229(f)
email: pete@parkplanningassociates.com
www.parkplanningassociates.com

BETA Group, Inc.
Engineers • Planners • Landscape Architects
Lincoln, RI - Norwood, MA - Hartford, CT
315 Norwood Park South
Norwood, MA 02062
781.255.1982
email: BETA@BETA-inc.com

ISSUE:

#	DATE	DESCRIPTION

PROJECT:

RECONSTRUCTION OF FAXON PARK PLAYGROUND

PREPARED FOR:

CITY OF QUINCY PARK DEPARTMENT

DRAWING TITLE:

EXISTING CONDITIONS PLAN

JOB #: 4630 DRAWN BY: VMV

DATE: 04/10/14 CHECKED BY: PFP

DRAWING NUMBER:

2 of 8

SCALE: 1"=10'

20
96.89
SB DH GPS 9

1
101.98
SN

2
88.68
SN

SAW CUT

REMOVE EXIST.
SWING GATE INCL.
POST AND FOOTINGS.
FILL WITH DGCS AND
COMPACT (SEE NOTE BELOW)

REMOVE U.P.
AND WIRES
(BY OTHERS)

REMOVE EXIST.
PLAYGROUND EQUIP.

BENCH

CLIMBING EQUIPMENT

BENCH

BENCH

SWINGS

REMOVE

REMOVE (TYP.)

REMOVE PAVEMENT

REMOVE U.P.
AND WIRES
(BY OTHERS)

PROTECT TREE
TO REMAIN (TYP.)

NOTE: CONTRACTOR TO REMOVE SWING GATE,
POSTS AND FOOTINGS. BACKFILL WITH DGCS,
COMPACT, AND PATCH PAVING AT SECOND
PARK ENTRANCE.

LIMIT OF WORK
(TYP.)

3
107.32
PK

SAW CUT

PROVIDE EROSION
CONTROL PROTECTION
CLEAN CATCH BASIN
AND DRAIN PIPE

REMOVE

PROTECT & PRUNE
EXISTING TREE

INSTALL CONSTRUCTION FENCING
AROUND PERMETER OF WORK AREA
(PLAYGROUND SIDE OF ROAD ONLY)

10 0 10 20
SCALE IN FEET: 1"=10'

PARK PLANNING ASSOCIATES

14 Capen Street
Milton, MA 02186
617.696.2834(v) 617.696.9229(f)
email: pete@parkplanningassociates.com
www.parkplanningassociates.com

BETA Group, Inc.
Engineers • Planners • Landscape Architects
Lincoln, RI - Norwood, MA - Hartford, CT

315 Norwood Park South
Norwood, MA 02062
781.255.1982
email: BETA@BETA-inc.com

ISSUE:

#	DATE	DESCRIPTION

PROJECT:

RECONSTRUCTION
OF FAXON PARK
PLAYGROUND

PREPARED FOR:

CITY OF QUINCY
PARK DEPARTMENT

DRAWING TITLE:

SITE PREP.
& DEMO. PLAN

JOB #: 4630 DRAWN BY: VMV
DATE: 04/10/14 CHECKED BY: PFP

DRAWING NUMBER:

3 of 8

SCALE: 1"=10'

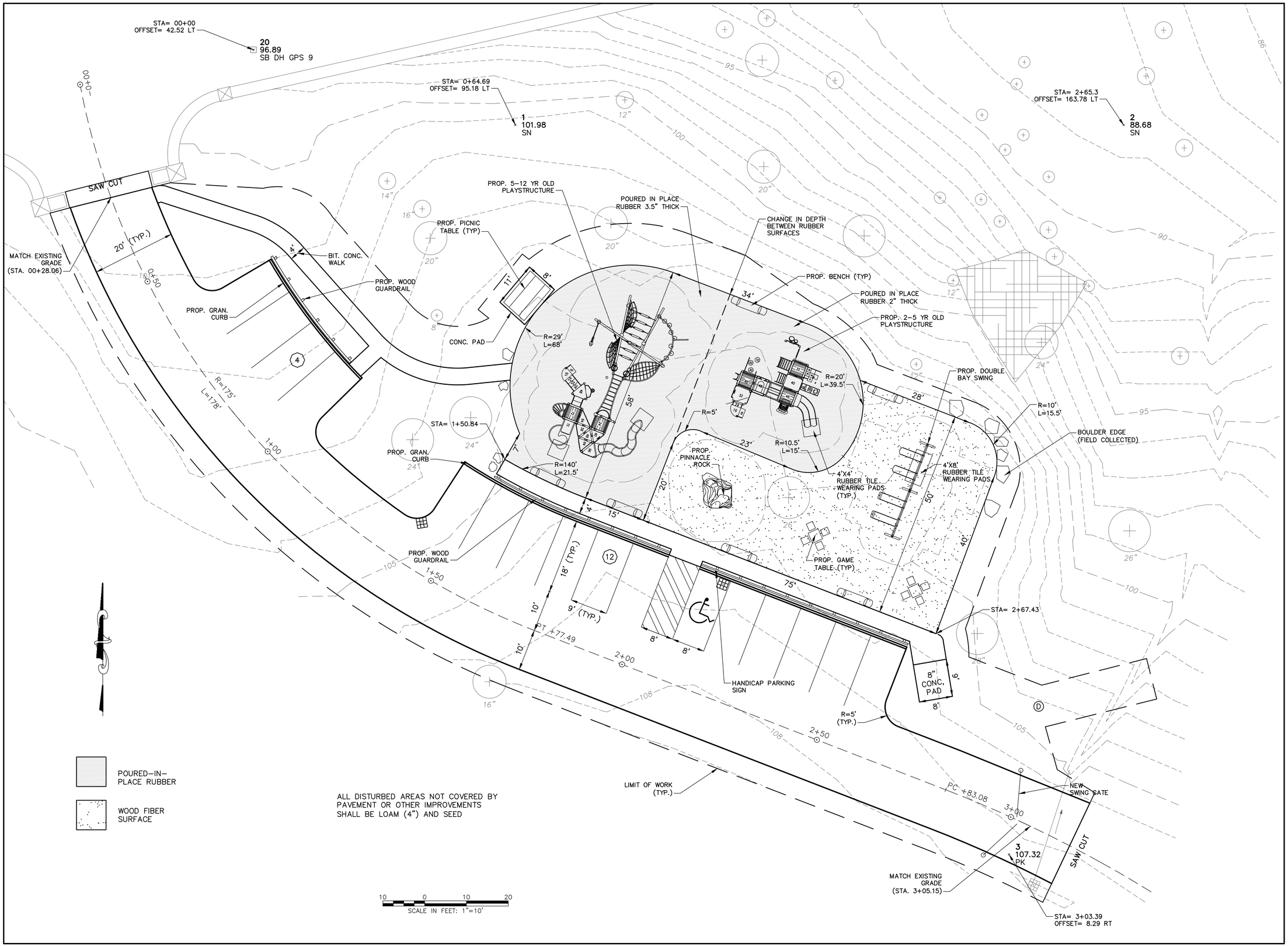

PARK PLANNING ASSOCIATES
14 Capen Street
Milton, MA 02186
617.696.2834(v) 617.696.9229(f)
email: pete@parkplanningassociates.com
www.parkplanningassociates.com

BETA Group, Inc.
Engineers • Planners • Landscape Architects
Lincoln, RI - Norwood, MA - Hartford, CT

315 Norwood Park South
Norwood, MA 02062
781.255.1982
email: BETA@BETA-inc.com

ISSUE:

#	DATE	DESCRIPTION

PROJECT:

RECONSTRUCTION OF FAXON PARK PLAYGROUND

PREPARED FOR:

CITY OF QUINCY PARK DEPARTMENT

DRAWING TITLE:

LAYOUT & MATERIALS PLAN

JOB #: 4630 DRAWN BY: VMV
DATE: 04/10/14 CHECKED BY: PFP
DRAWING NUMBER:

4 of 8

SCALE: 1"=10'

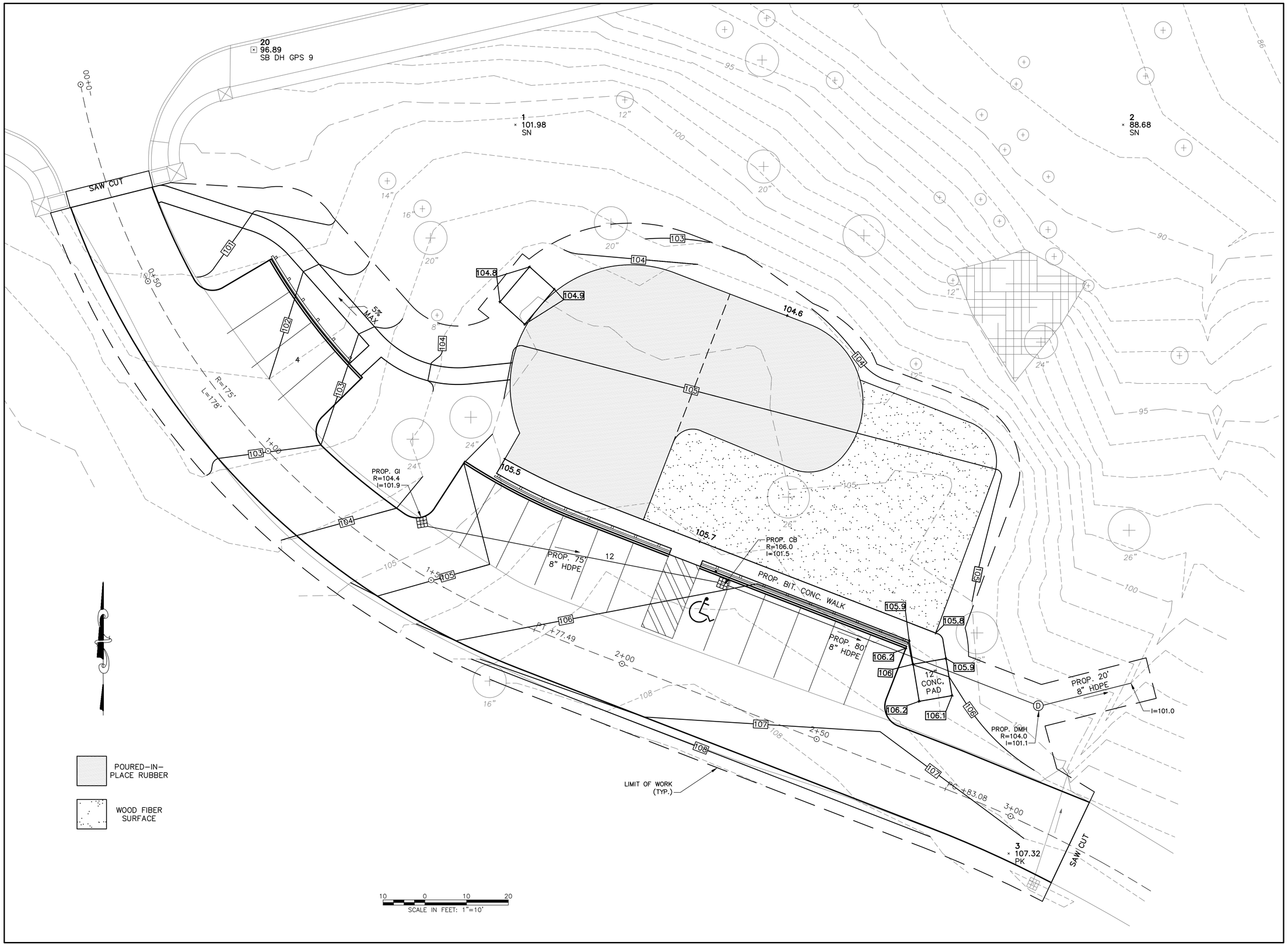

PARK PLANNING ASSOCIATES
14 Capen Street
Milton, MA 02186
617.696.2834(v) 617.696.9229(f)
email: pete@parkplanningassociates.com
www.parkplanningassociates.com

BETA Group, Inc.
Engineers • Planners • Landscape Architects
Lincoln, RI - Norwood, MA - Hartford, CT
315 Norwood Park South
Norwood, MA 02062
781.255.1982
email: BETA@BETA-inc.com

ISSUE:

#	DATE	DESCRIPTION

PROJECT:

RECONSTRUCTION OF FAXON PARK PLAYGROUND

PREPARED FOR:

CITY OF QUINCY PARK DEPARTMENT

DRAWING TITLE:

GRADING & UTILITY PLAN

JOB #: 4630 DRAWN BY: VMV
DATE: 04/10/14 CHECKED BY: PFP
DRAWING NUMBER:

5 of 8

SCALE: 1"=10'

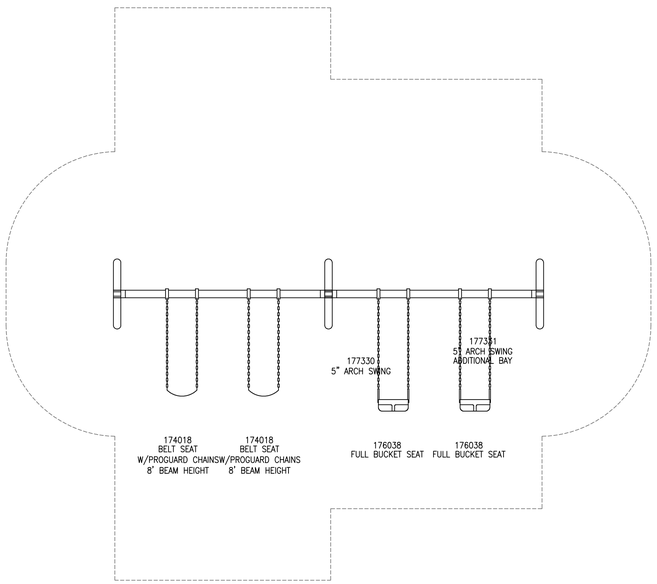

DOUBLE BAY SWING
1/4" = 1'

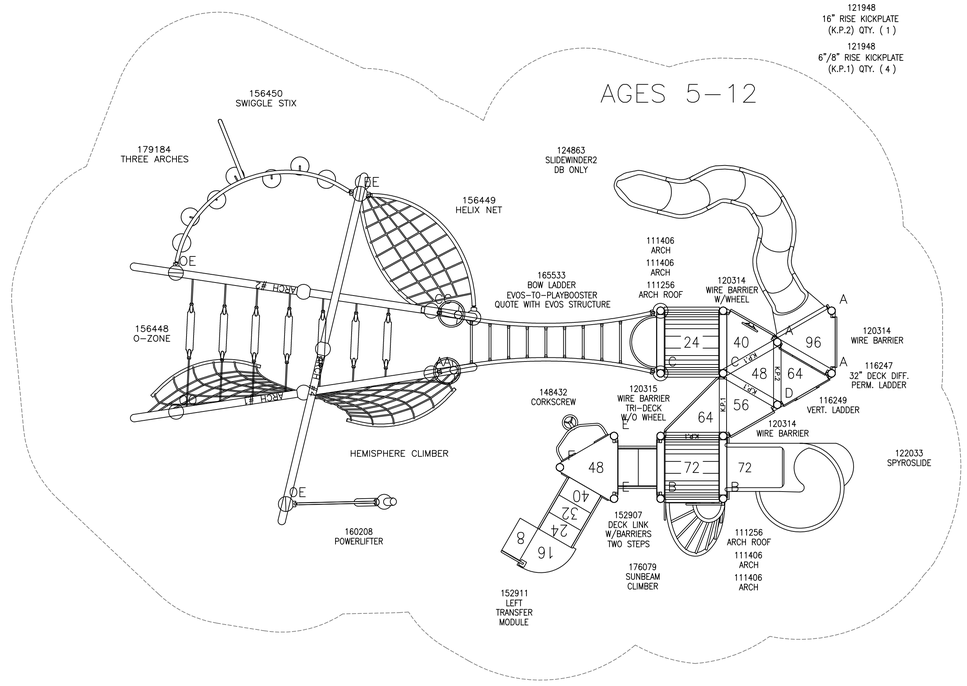

5–12 YEAR OLD PLAY STRUCTURE
1/4" = 1'

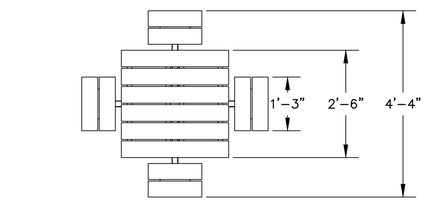

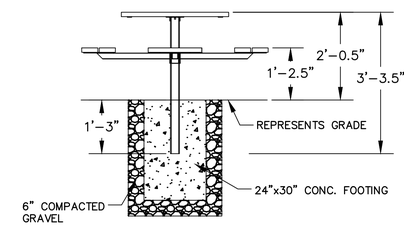

GAME TABLE
NOT TO SCALE

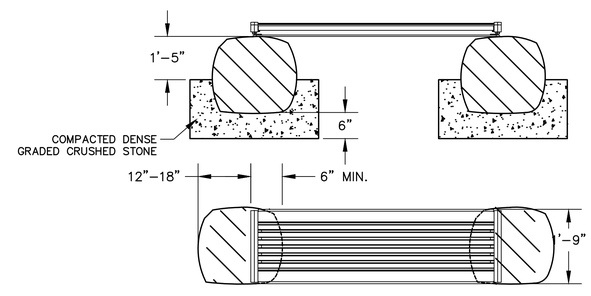

BENCH
NOT TO SCALE

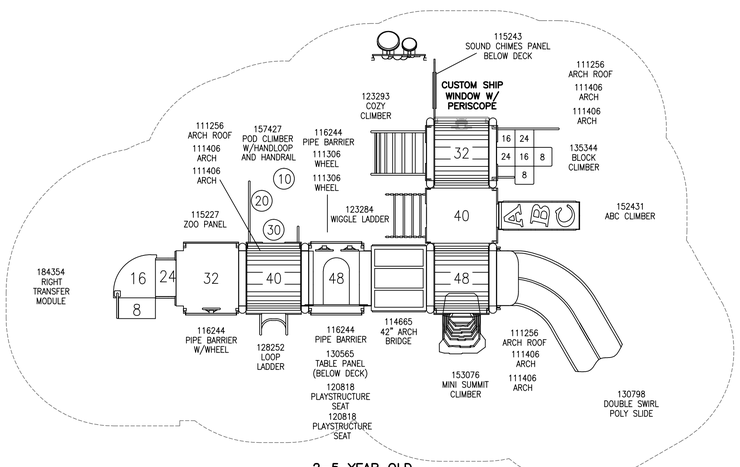

2–5 YEAR OLD PLAY STRUCTURE
1/4" = 1'

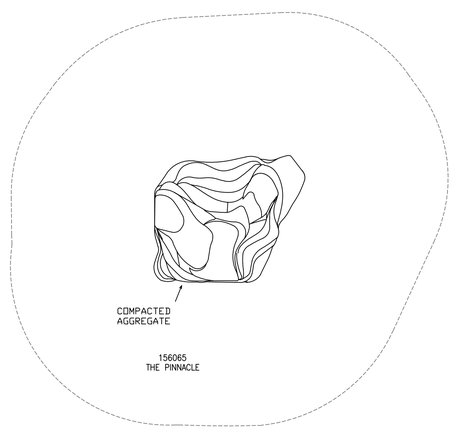

PINNACLE ROCK
1/4" = 1'

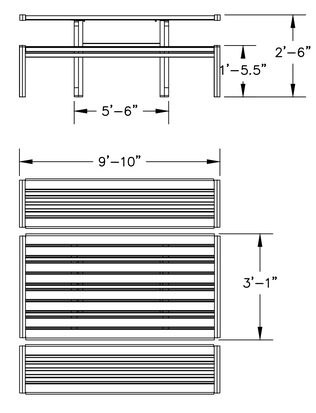

PICNIC TABLE
NOT TO SCALE

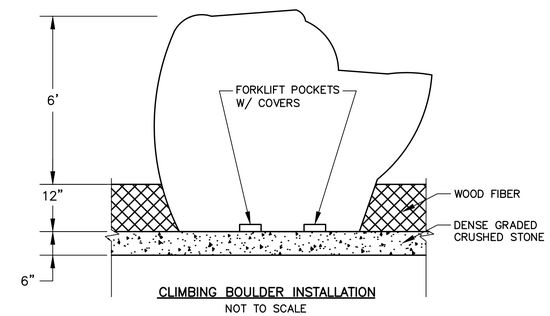

CLIMBING BOULDER INSTALLATION
NOT TO SCALE

PARK PLANNING ASSOCIATES
14 Capen Street
Milton, MA 02186
617.696.2834(v) 617.696.9229(f)
email: pete@parkplanningassociates.com
www.parkplanningassociates.com

BETA Group, Inc.
Engineers • Planners • Landscape Architects
Lincoln, RI - Norwood, MA - Hartford, CT

315 Norwood Park South
Norwood, MA 02062
781.255.1982
email: BETA@BETA-inc.com

ISSUE:

#	DATE	DESCRIPTION

PROJECT:

RECONSTRUCTION OF FAXON PARK PLAYGROUND

PREPARED FOR:

CITY OF QUINCY PARK DEPARTMENT

DRAWING TITLE:

PLAYGROUND DETAILS

JOB #: 4630 DRAWN BY: VMV
DATE: 04/10/14 CHECKED BY: PFP

DRAWING NUMBER:

6 of 8

SCALE: 1/4"=1'

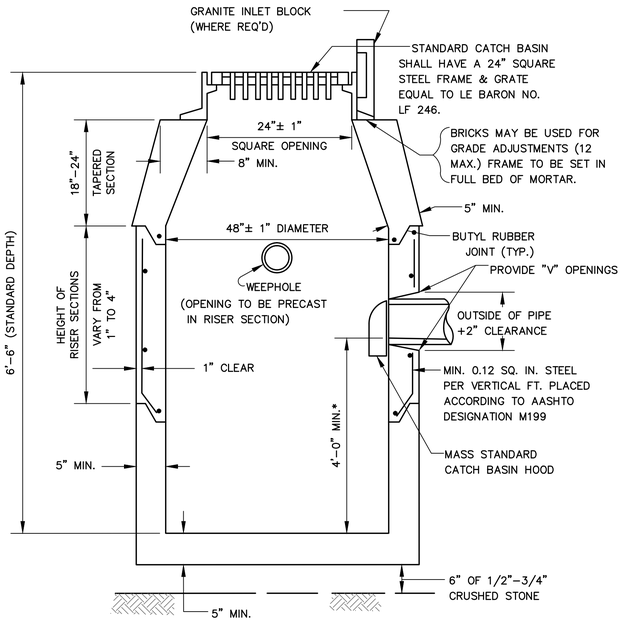

NOTE: NO BELL ENDS IN CATCH BASIN. CONNECTIONS TO BE TIGHTLY SEALED WITH MORTAR.
*MAY BE REDUCED IF LEDGE ENCOUNTERED

PRECAST CONCRETE CATCH BASIN

NOT TO SCALE

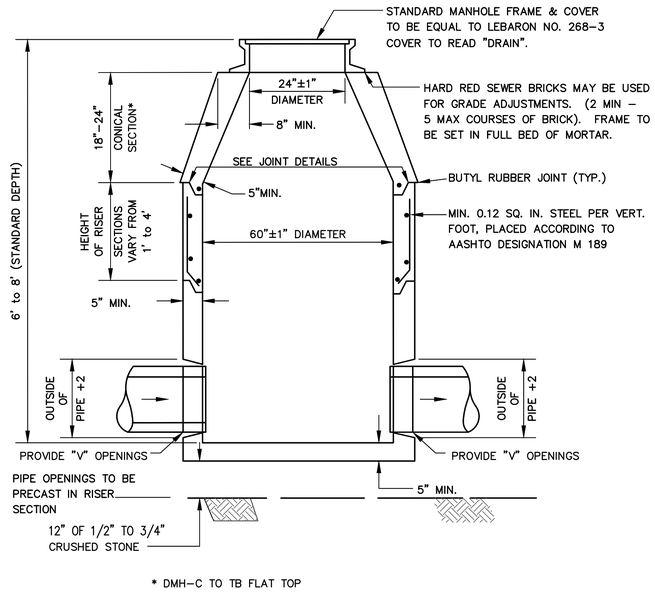

* DMH–C TO TB FLAT TOP

PRECAST CONCRETE MANHOLE

NOT TO SCALE

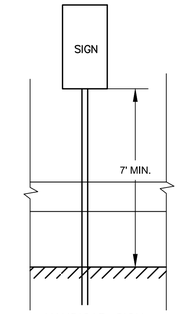

HANDICAP SIGN
(STA=2+12.97 OFFSET=28.74 LT)
NOT TO SCALE

NOTES:
1. FENCE FABRIC SHALL BE 36–INCHES WIDE MINIMUM AND SHALL BE SECURELY FASTENED TO BEANPOLES. 6" MIN OF FABRIC SHALL BE BELOW GROUND SURFACE (BACKFILLED OR TOE–ED INTO GROUND).
2. WOODEN STAKE POST SPACING SHALL BE 4–FOOT MAX ON CENTER.

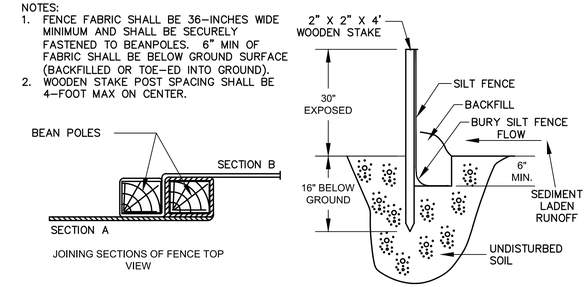

SEDIMENTION FENCE (IF NECESSARY)
NOT TO SCALE

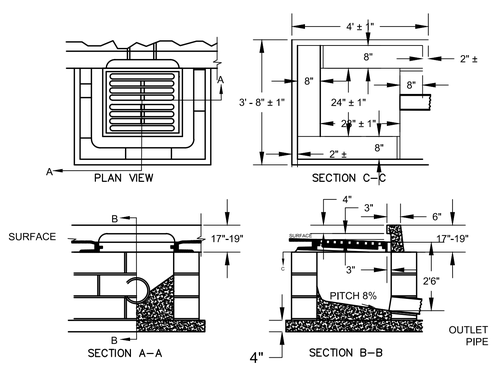

NOTES:
1. WHERE CURB INLET IS NOT USED THE INSIDE HORIZONTAL DIMENSIONS OF GUTTER INLET TO BE 24"±1" X 24"±1" IN WHICH CASE AND UNLESS OTHERWISE DIRECTED, A STANDARD 4–FLANGE FRAME IS TO BE USED.
2. BRICKS MAY BE USED BETWEEN TOP COURSE AND FRAME FOR GRADE ADJUSTMENT.
3. FOR DESCRIPTION, MATERIALS AND CONSTRUCTION METHODS, SEE STANDARD SPECS.

GUTTER INLET (GI)

NOT TO SCALE

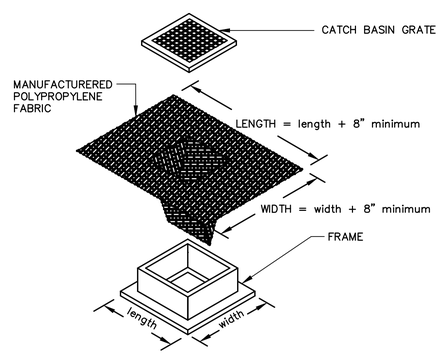

NOTES
1. LENGTH AND WIDTH OF POLYPROPYLENE FABRIC MUST EXCEED EXISTING CATCH BASIN FRAME DIMENSIONS BY A MINIMUM OF 8".
2. REMOVE CATCH BASIN GRATE AND INSTALL POLYPROPYLENE FABRIC OVER CATCH BASIN FRAME. REPLACE CATCH BASIN GRATE TO SECURE POLYPROPYLENE FABRIC IN PLACE.

SILT SACK DETAIL
NOT TO SCALE

1" Chamfer Around Top of Post and Front Face of Rail

Rails Half Lap Jointed at Alternate Post Only

8" x 8" Wood Posts (S4S)

4" x 10" Wood Rail (S4S)

Wood Posts Direct Bury

1/2" Galvanized Carriage Bolts with Hex Nuts and Washers, Two per Post

Posts Adjacent to Opening to Extend 18" above Rail

Face of Guardrail to be 6" from back of Curb

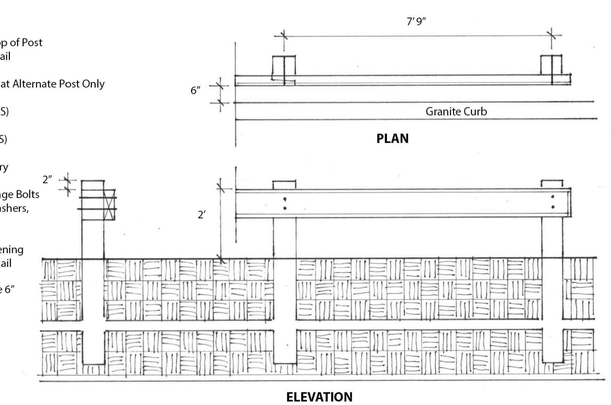

WOOD FACE GUARD RAIL
NOT TO SCALE

PARK PLANNING ASSOCIATES
14 Capen Street
Milton, MA 02186
617.696.2834(v) 617.696.9229(f)
email: pete@parkplanningassociates.com
www.parkplanningassociates.com

BETA Group, Inc.
Engineers • Planners • Landscape Architects
Lincoln, RI - Norwood, MA - Hartford, CT

315 Norwood Park South
Norwood, MA 02062
781.255.1982
email: BETA@BETA-inc.com

ISSUE:

#	DATE	DESCRIPTION

PROJECT:

RECONSTRUCTION OF FAXON PARK PLAYGROUND

PREPARED FOR:

CITY OF QUINCY PARK DEPARTMENT

DRAWING TITLE:

SITE DETAILS

JOB #: 4630 DRAWN BY: VMV
DATE: 04/10/14 CHECKED BY: PFP
DRAWING NUMBER:

SCALE: 1/4"=1'

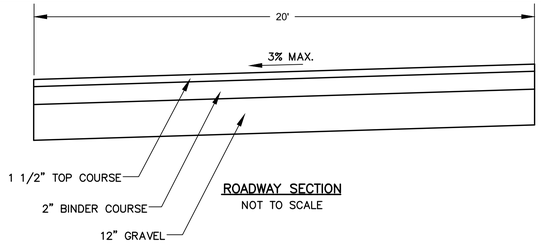

ROADWAY SECTION
NOT TO SCALE

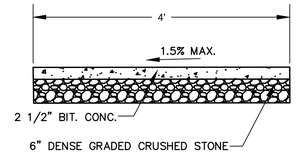

WALKWAY SECTION
NOT TO SCALE

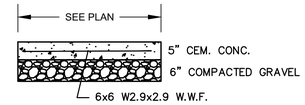

PICNIC TABLE PAD SECTION
NOT TO SCALE

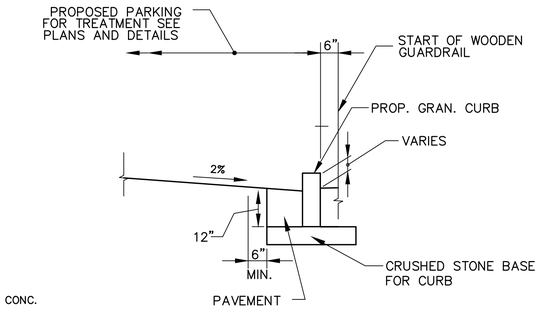

DETAIL FOR GRAN. CURB TYPE VA-4
NOT TO SCALE

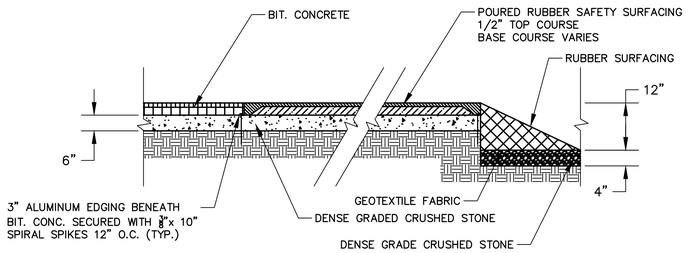

POURED-IN-PLACE RUBBER SAFETY SURFACING
NOT TO SCALE

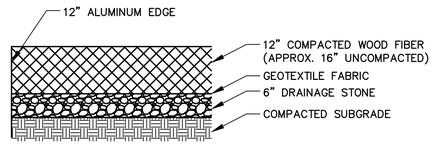

GENERAL SECTION
NOT TO SCALE

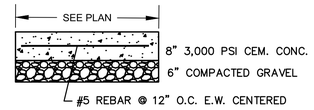

PORTA POTTY PAD SECTION
NOT TO SCALE

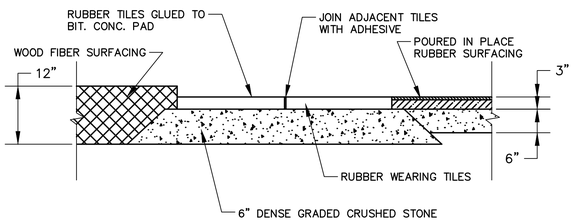

RUBBER TILE WEARING PADS
NOT TO SCALE

NOTE: IN WOOD FIBER AREA TOP OF PAD TO BE 3" BELOW FINISH GRADE

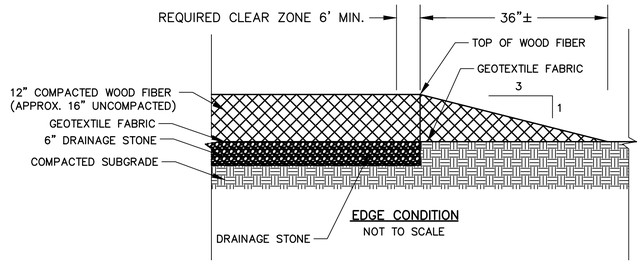

EDGE CONDITION
NOT TO SCALE

WOOD FIBER SAFETY SURFACE
NOT TO SCALE

NOTE: 12" ALUMINUM EDGING AT WALKWAY EDGE

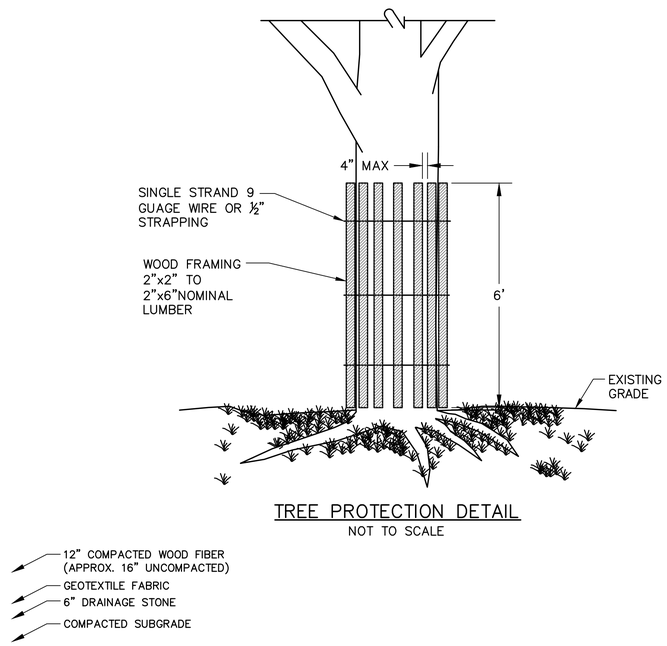

TREE PROTECTION DETAIL
NOT TO SCALE

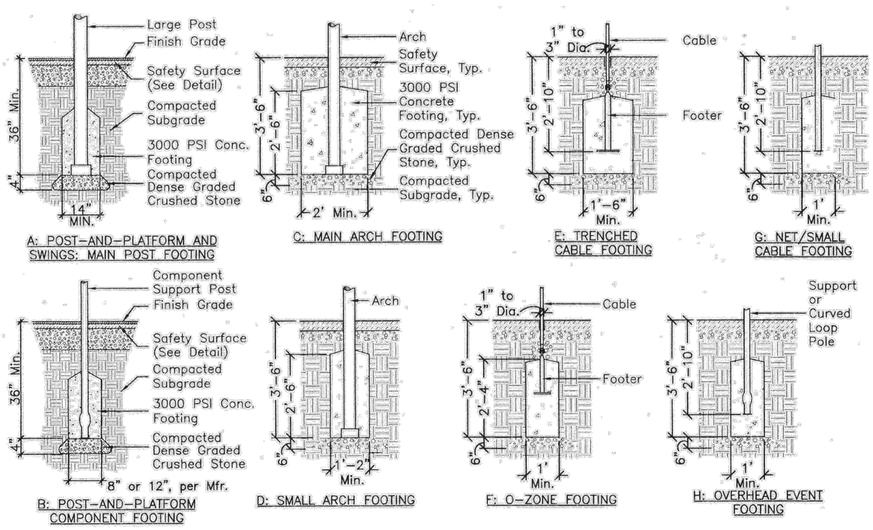

PLAYGROUND FOOTINGS
NOT TO SCALE

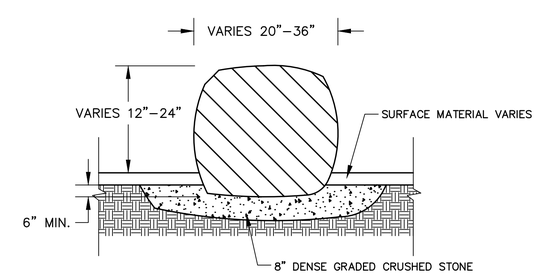

BOULDER SETTING
NOT TO SCALE

PARK PLANNING ASSOCIATES
14 Capen Street
Milton, MA 02186
617.696.2834(v) 617.696.9229(f)
email: pete@parkplanningassociates.com
www.parkplanningassociates.com

BETA Group, Inc.
Engineers • Planners • Landscape Architects
Lincoln, RI - Norwood, MA - Hartford, CT
315 Norwood Park South
Norwood, MA 02062
781.255.1982
email: BETA@BETA-inc.com

ISSUE:

#	DATE	DESCRIPTION

PROJECT:
RECONSTRUCTION OF FAXON PARK PLAYGROUND

PREPARED FOR:
CITY OF QUINCY PARK DEPARTMENT

DRAWING TITLE:
SITE DETAILS

JOB #: 4630 DRAWN BY: VMV
DATE: 04/10/14 CHECKED BY: PFP
DRAWING NUMBER:

SCALE: 1/4"=1'