Atlantic Middle School Campus Improvement Project
Quincy, MA

Bidding Documents

THE HONORABLE THOMAS P. KOCH,
MAYOR

CHRISTOPHER CASSANI
EXECUTIVE DIRECTOR OF PARKS & FORESTRY

KATHRYN R. HOBIN
CHIEF PROCUREMENT OFFICER

WOODARD & CURRAN

980 Washington Street, Suite 325
Dedham, MA 02026
1-800-446-5518

0227591.01
City of Quincy

April 2014

woodardcurran.com
COMMITMENT & INTEGRITY DRIVE RESULTS

This page intentionally left blank

SECTION 00 01 07

SEALS PAGE

The engineering material and data contained in these Contract Documents were prepared under the supervision and direction of the undersigned, whose seal as a registered professional engineer is affixed below.

COMMONWEALTH OF MASSACHUSETTS
DAVID A. WHITE
CIVIL
No. 29880
REGISTERED PROFESSIONAL ENGINEER

David A. White

David A. White, Jr., P.E.
Senior Vice President|Senior Project Manager
Woodard and Curran, Inc. (Engineer)

4/28/14
Date of Issue

This page intentionally left blank

SECTION 00 01 10

TABLE OF CONTENTS

		PAGES
DIVISION 00 PROCUREMENT AND CONTRACTING REQUIREMENTS		
INTRODUCTORY INFORMATION		
00 01 07	Seals Page	2
00 01 10	Table of Contents	4
00 01 15	List of Drawing Sheets	2
PROCUREMENT/BIDDING REQUIREMENTS		
Invitation to Bid (copy as published)		2
00 21 13	Instructions to Bidders	14
00 22 13	Supplementary Instructions to Bidders	4
00 41 01	Bid Form	8
00 43 13	Bid Security Form	2
00 43 22	Unit Prices Form	8
00 43 22.01	Unit Prices Form for Additional Work	2
00 43 36	Proposed Subcontractors Form	2
00 43 37	Proposed Suppliers Form	2
00 43 40	Information, Schedules and Data	2
00 43 93	Bid Submittal Checklist	2
00 45 05	Bidder's Representations and Certifications	4
00 45 13	Bidder's Qualifications	8
00 45 19	Non-Collusion Affidavit	2
CONTRACTING REQUIREMENTS		
00 51 00	Notice of Award	2
00 52 10	Agreement Form	12
00 54 00	Agreement Form Supplements	2
00 55 00	Notice to Proceed	2
00 60 00	Project Forms	1
	Performance Bond Form (C-00 61 13.13)	4
	Payment Bond Form (C-00 61 13.16)	4
	Application for Payment Certificate Form (C-00 62 76)	4
	Request for Interpretation/Information Form (C-00 63 15)	2
	Field Order Form (C-00 63 36)	2
	Work Change Directive Form (C-00 63 49)	2
	Change Request Form (C- 00 63 60)	2
	Change Order Form (C-00 06 63)	2
	City of Quincy Change Order/Amendment (C-006363A)	2
	Notice of Substantial Completion Form (C-00 65 15)	2
	Certificate of Substantial Completion Form (C-00 65 16)	2
	Certificate of Completion Form (C-00 65 19)	2
	Final Release and Waiver of Liens (C-00 65 19.15)	2

PAGES

DIVISION 00 PROCUREMENT AND CONTRACTING REQUIREMENTS (CONTINUED)

CONTRACTING REQUIREMENTS (CONTINUED)

00 72 05	Standard General Conditions of the Construction Contract (EJCDC C-700, 2007) with Standard Supplementary Conditions		80
00 73 05	Additional Supplementary Conditions		2
	00 73 10	Specific Project Requirements	4
	00 73 10A	QMC 12.08 -17.36	12
	00 73 10B	QMC-Zoning Code Info	20
	00 73 10C	Test Pits Map & Logs	58
	00 73 19	Health and Safety Criteria	2
	00 73 37	Equal Employment Opportunity Requirements	2
	00 73 43	Wage Rates Requirements	4
	00 73 46	Wage Determination Schedule	44
	00 73 73	Statutory Requirements	12

SPECIFICATIONS

DIVISION 01 GENERAL REQUIREMENTS

01 00 10 Overall General Requirements 48

Includes:

Price and Payment Procedures
Administrative Requirements
Quality Requirements
Source Quality Control
Product Requirements
Temporary Construction Facilities
Temporary Utilities
Temporary Controls
Removal of Temporary Utilities, Facilities, And Controls
Overall Execution Requirements
Startup, Testing, and Commissioning

01 11 00	Work Summary	2
01 15 00	Specific Project Requirements and Procedures	8
01 20 25	Measurement and Payment	16
01 50 10	Temporary Water Bypass	4
01 51 42	Temporary Storm Drain Bypass	4

PAGES

DIVISION 02 - EXISTING CONDITIONS
02 41 14 Selective Site Demolition and Restoration 6
02 41 15 Drainage Structure Removal 2

DIVISION 05 – METALS
05 52 00 Metal Railings 4

DIVISION 31 – EARTHWORK
31 00 00 Earthwork 14
31 23 16.16 Rock Removal 4
31 32 19.16 Geotextile Soil Stabilization 4

DIVISION 32 – EXTERIOR IMPROVEMENTS
32 05 23 Cement and Concrete for Exterior Improvements 2
32 12 16 Asphalt Paving 4
32 16 14 Curbs 4
32 17 25 Pavement Markings 2
32 90 00 Planting 4

DIVISION 33 – UTILITIES
33 10 10 Water Distribution 10
33 41 00 Storm Utility Drainage Piping 8
33 49 00 Storm Drainage Structures 4

END OF SECTION

THIS PAGE INTENTIONALLY LEFT BLANK

SECTION 00 01 15

LIST OF DRAWING SHEETS

DRAWING NUMBER	DRAWING TITLE
C-001	Cover Sheet
C-100	Notes, Legend, Abbreviations & Key Plan
C-101	Existing Conditions Overall Plan & Key Plan
C-102	Existing Conditions Plan 1
C-103	Existing Conditions Plan 2
C-104	Existing Conditions Plan 3
C-105	Existing Conditions Plan 4
C-200	Site Plan 1
C-201	Site Plan 2
C-202	Grading & Drainage Plan 1
C-203	Grading & Drainage Plan 2
C-300	Project Details 1
C-301	Project Details 2
C-302	Project Details 3
C-303	Project Details 4
S-01	Structural Details 1
S-02	Structural Details 2

This page intentionally left blank

CITY OF QUINCY, MASSACHUSETTS
Department of Park & Forestry

Thomas P. Koch
Mayor

Christopher Cassani
Executive Director

INVITATION TO BID

The Department of Parks and Forestry for the City of Quincy, Massachusetts is seeking sealed bids for **Atlantic Middle School Campus Improvements Project** until **11:00 a.m**. local time **Thursday, May 15, 2014**, in the offices of the Purchasing Agent, 1305 Hancock St., Quincy, Massachusetts 02169, at which time and place all bids will be publicly opened and read aloud.

The work under this contract consists of, but is not limited to, construction of vehicular access and parking facilities and drainage infrastructure construction and repairs. The Work includes realignment of driveway access; removal and expansion of parking lot; installation of drainage structures, open cut removal & replacement or new installation of approximately 500 linear feet of drainage pipe, installation of a subsurface stormwater mitigation facility; excavation and grading of surface stormwater mitigation facility; curb installation and curb removal and reset; sidewalk removal and replacement; fence removal and replacement; temporary bypass pumping; plugging of flows; appurtenances; excavation, trench support; backfilling; restoration; paving; environmental protection; and all materials, equipment, services and construction inherent to the Work.

All work under this contract shall be completed within sixty (60) calendar days.

Detailed specifications are available on-line at the City of Quincy's website, www.quincyma.gov and also available at the Office of the Purchasing Agent, Quincy City Hall, 1305 Hancock Street, Quincy, Massachusetts, 02169, between the hours of 8:30 AM and 4:30 PM for a refundable printing charge of $100.00 if returned 10 days within bid opening and in unused condition. Specifications will be available April 30, 2014.

Each bid shall be accompanied by a bid security in the amount of five percent (5%) of the total value of the bid in the form of a bid bond or certified/treasurer's check.

The bidding and award of this contract shall be in full compliance with Massachusetts General Laws, Chapter 30, Section 39M, as last revised. All Federal, State and City of Quincy regulations when applicable in relation to Minority Business Enterprise, Women's Business Enterprise, Minority Work Force, Equal Employment Opportunity and subject to the minimum wage rates set under the Massachusetts Prevailing Wage Law Chapter 149, §26 to 27H and/or any applicable federal rates. The City reserves the right to waive any informality in or to reject any or all bids when such an action is deemed in the best interests of the City.

Non-responsive and/or unbalanced bids may be rejected.

Thomas P. Koch
Mayor

Christopher Cassani
Executive Director of Parks & Forestry

Advertise		**Req. No.**
The Quincy Sun	May 1, 2014	S051514
The Central Register	April 30, 2014	

1305 Hancock St., Quincy MA 02169
Telephone: (617) 376-1060 Fax: (617) 376-1074

This page intentionally left blank

This document has important legal consequences; consultation with an attorney is encouraged with respect to its use or modification. This document should be adapted to the particular circumstances of the contemplated Project and the controlling Laws and Regulations.

SECTION 00 21 13
INSTRUCTIONS TO BIDDERS FOR CONSTRUCTION CONTRACTS

Based on that prepared by

ENGINEERS JOINT CONTRACT DOCUMENTS COMMITTEE

and

Issued and Published Jointly by

AMERICAN COUNCIL OF ENGINEERING COMPANIES

ASSOCIATED GENERAL CONTRACTORS OF AMERICA

AMERICAN SOCIETY OF CIVIL ENGINEERS

PROFESSIONAL ENGINEERS IN PRIVATE PRACTICE
A Practice Division of the
NATIONAL SOCIETY OF PROFESSIONAL ENGINEERS

Endorsed by

CONSTRUCTION SPECIFICATIONS INSTITUTE

Copyright © 2007 National Society of Professional Engineers for EJCDC. All rights reserved.

Copyright © 2007 National Society of Professional Engineers
1420 King Street, Alexandria, VA 22314-2794
(703) 684-2882
www.nspe.org

American Council of Engineering Companies
1015 15th Street N.W., Washington, DC 20005
(202) 347-7474
www.acec.org

American Society of Civil Engineers
1801 Alexander Bell Drive, Reston, VA 20191-4400
(800) 548-2723
www.asce.org

Associated General Contractors of America
2300 Wilson Boulevard, Suite 400, Arlington, VA 22201-3308
(703) 548-3118
www.agc.org

The copyright for this EJCDC document is owned jointly by the four
EJCDC sponsoring organizations and held in trust for their benefit by NSPE.

ARTICLE 1 – DEFINED TERMS

1.01 Terms used in these Instructions to Bidders have the meanings indicated in the Standard General and Supplementary Conditions and the Additional Supplementary Conditions (if any). Additional terms used in these Instructions to Bidders have the meanings indicated below and as may be included in the Supplementary Instructions to Bidders:

A. *Issuing Office* – The office from which the Bidding Documents are to be issued and where the bidding procedures are to be administered, identified as:

Office of the Purchasing Agent
Quincy City Hall
1305 Hancock Street
Quincy, MA 02169

B. *Supplements* – Those sections of the Bidding Requirements to be submitted with and made a condition of a Bid.

ARTICLE 2 – COPIES OF BIDDING DOCUMENTS

2.01 Sets of Bidding Documents may be examined at the Issuing Office beginning on April 30, 2014 8:30 a.m. to 4:30 p.m., Monday through Friday.

2.02 Sets of Bidding Documents may be obtained:

electronically at no cost by registering at:
http://www.quincyma.gov/Government/PPD/PurchasingBidPage.cfm
Bidders shall send a confirming email to "purchasing@quincyma.gov" to allow Owner to maintain a plan holders list. If Bidding Documents are downloaded and/or printed from Owner's website, it is Bidder's responsibility to check the website for any addenda before submitting a Bid. The Owner will not be responsible for any Bid that omits addenda acknowledgement.

and

in hardcopy from Issuing Office, beginning on April 30, 2014, 8:30 a.m. to 4:30 p.m. Mondays through Friday.

Non-refundable printing price for each set of Bidding Documents: $100 payable by certified check, treasurer's or cashier's check, or money order to the City of Quincy.

Bidders requesting delivery of hardcopy may provide a Federal Express or UPS account number for delivery.

Based on EJCDC C-200 Suggested Instructions to Bidders for Construction Contracts
Copyright © 2007 National Society of Professional Engineers for EJCDC. All rights reserved.

2.03 Complete sets of Bidding Documents shall be used in preparing Bids; neither Owner nor Engineer assumes any responsibility for errors or misinterpretations resulting from the use of the incomplete sets of Bidding Documents, Bidding Documents provided by third parties, or for modifications to the Bidding Documents not made by official Addenda, including electronic conversion.

2.04 Owner and Engineer, in making copies of Bidding Documents available on the above terms, do so only for the purpose of obtaining Bids for the Work and do not authorize or confer a license for any other use.

ARTICLE 3 – QUALIFICATIONS OF BIDDERS

3.01 To demonstrate Bidder's qualifications to perform the Work, Bidder shall submit written evidence such as financial data, previous experience, present commitments, and such other data requested in the Bidding Documents, and within the time frames stipulated, upon Owner's request.

3.02 Bidders shall meet minimum criteria regarding experience and qualifications set forth in the General Requirements.

ARTICLE 4 – EXAMINATION OF BIDDING DOCUMENTS, OTHER RELATED DATA, AND SITE

4.01 *Subsurface and Physical Conditions*

A. Section 00 73 10 of the Additional Supplementary Conditions identifies:

1. those reports known to Owner of explorations and tests of subsurface conditions at or contiguous to the Site; and

2. those drawings known to Owner of physical conditions relating to existing surface or subsurface structures at the Site (except Underground Facilities).

B. Copies of reports and drawings referenced in Section 00 73 10, if any, are included in the Bidding Documents as indicated in Section 00 31 00. Those reports and drawings are not part of the Contract Documents, but the "technical data" contained therein upon which Bidder is entitled to rely as provided in Paragraph 4.02 of the Standard General and Supplementary Conditions, has been identified and established in Section 00 73 10.

C. Bidder is responsible for any interpretation or conclusion Bidder draws from any "technical data" or any other data, interpretations, opinions, or information contained in such reports or shown or indicated in such drawings.

Based on EJCDC C-200 Suggested Instructions to Bidders for Construction Contracts
Copyright © 2007 National Society of Professional Engineers for EJCDC. All rights reserved.

4.02 *Underground Facilities*

A. Information and data shown or indicated in the Bidding Documents with respect to existing Underground Facilities at or contiguous to the Site is based upon information and data furnished to Owner and Engineer by owners of such Underground Facilities, including Owner, or others.

4.03 *Hazardous Environmental Condition*

A. Section 00 73 10 of the Additional Supplementary Conditions identifies any reports and drawings known to Owner relating to a Hazardous Environmental Condition identified at the Site.

B. Copies of reports and drawings referenced in in Section 00 73 10, if any, are included in the Bidding Documents as indicated in in Section 00 31 00. Those reports and drawings are not part of the Contract Documents, but the "technical data" contained therein upon which Bidder is entitled to rely as provided in Paragraph 4.06 of the Standard General and Supplementary Conditions, has been identified and established in Section 00 73 10.

C. Bidder is responsible for any interpretation or conclusion Bidder draws from any "technical data" or any other data, interpretations, opinions, or information contained in such reports or shown or indicated in such drawings.

4.04 Provisions concerning responsibilities for the adequacy of data furnished to prospective Bidders with respect to subsurface conditions, other physical conditions, and Underground Facilities, and possible changes in the Bidding Documents due to differing or unanticipated subsurface or physical conditions appear in Paragraphs 4.02, 4.03, and 4.04 of the Standard General and Supplementary Conditions and Section 00 73 10. Provisions concerning responsibilities for the adequacy of data furnished to prospective Bidders with respect to a Hazardous Environmental Condition at the Site, if any, and possible changes in the Contract Documents due to any Hazardous Environmental Condition uncovered or revealed at the Site which was not shown or indicated in the Drawings or Specifications or identified in the Contract Documents to be within the scope of the Work, appear in Paragraph 4.06 of the Standard General and Supplementary Conditions and Section 00 73 10.

4.05 Upon request, Owner may provide Bidder access to the Site to conduct such examinations, investigations, explorations, tests, and studies as Bidder deems necessary for submission of a Bid. Bidder shall be responsible for obtaining permission and necessary permits and insurance for access to the Site. Bidder shall clean up and restore the Site to its former condition upon completion of any such explorations, investigations, tests, and studies. Bidder shall comply with all applicable Laws and Regulations relative to excavation and utility locates.

Based on EJCDC C-200 Suggested Instructions to Bidders for Construction Contracts
Copyright © 2007 National Society of Professional Engineers for EJCDC. All rights reserved.

4.06 Reference is made to Article 7 of the Standard General and Supplementary Conditions and Section 00 73 10 for the identification of the general nature of other work that is to be performed at the Site by Owner or others (such as utilities and other prime contractors) that relates to the Work contemplated by these Bidding Documents. On request, Owner will provide to each Bidder for examination access to or copies of contract documents (other than portions thereof related to price) for such other work.

4.07 It is the responsibility of each Bidder before submitting a Bid to:

A. examine and carefully study the Bidding Documents, and the other related data identified in the Bidding Documents;

B. visit the Site and become familiar with and satisfy Bidder as to the general, local, and Site conditions that may affect cost, progress, and performance of the Work;

C. become familiar with and satisfy Bidder as to all federal, state, and local Laws and Regulations that may affect cost, progress, and performance of the Work;

D. carefully study all: (1) reports of explorations and tests of subsurface conditions at or contiguous to the Site and all drawings of physical conditions relating to existing surface or subsurface structures at the Site (except Underground Facilities) that have been identified in Section 00 73 10 , as containing reliable "technical data," and (2) reports and drawings of Hazardous Environmental Conditions, if any, at the Site that have been identified in Section 00 73 10, as containing reliable "technical data";

E. consider the information known to Bidder; information commonly known to contractors doing business in the locality of the Site; information and observations obtained from visits to the Site; the Bidding Documents; and the Site-related reports and drawings identified in the Bidding Documents, with respect to the effect of such information, observations, and documents on (1) the cost, progress, and performance of the Work; (2) the means, methods, techniques, sequences, and procedures of construction to be employed by Bidder, including applying any specific means, methods, techniques, sequences, and procedures of construction expressly required by the Bidding Documents; and (3) Bidder's safety precautions and programs;

F. agree at the time of submitting its Bid that no further examinations, investigations, explorations, tests, studies, or data are necessary for the determination of its Bid for performance of the Work at the price(s) bid and within the times required, and in accordance with the other terms and conditions of the Bidding Documents;

G. become aware of the general nature of the work to be performed by Owner and others at the Site that relates to the Work as indicated in the Bidding Documents;

Based on EJCDC C-200 Suggested Instructions to Bidders for Construction Contracts
Copyright © 2007 National Society of Professional Engineers for EJCDC. All rights reserved.

H. correlate the information known to Bidder, information and observations obtained from visits to the Site, reports and drawings identified in the Bidding Documents, and all additional examinations, investigations, explorations, tests, studies, and data with the Bidding Documents;

I. promptly give Engineer written notice of all conflicts, errors, ambiguities, or discrepancies that Bidder discovers in the Bidding Documents and confirm that the written resolution thereof by Engineer is acceptable to Bidder; and

J. determine that the Bidding Documents are generally sufficient to indicate and convey understanding of all terms and conditions for the performance of the Work.

4.08 The submission of a Bid will constitute an incontrovertible representation by Bidder that Bidder has complied with every requirement of this Article 4, that without exception the Bid is premised upon performing and furnishing the Work required by the Bidding Documents and applying any specific means, methods, techniques, sequences, and procedures of construction that may be shown or indicated or expressly required by the Bidding Documents, that Bidder has given Engineer written notice of all conflicts, errors, ambiguities, and discrepancies that Bidder has discovered in the Bidding Documents and the written resolutions thereof by Engineer are acceptable to Bidder, and that the Bidding Documents are generally sufficient to indicate and convey understanding of all terms and conditions for performing and furnishing the Work.

ARTICLE 5 – PRE-BID CONFERENCE

5.01 A pre bid conference will not be held.

ARTICLE 6 – SITE AND OTHER AREAS

6.01 The Site is identified in the Bidding Documents. Easements for permanent structures or permanent changes in existing facilities are to be obtained and paid for by Owner unless otherwise provided in the Bidding Documents. All additional lands and access thereto required for temporary construction facilities, construction equipment, or storage of materials and equipment to be incorporated in the Work are to be obtained and paid for by Contractor.

ARTICLE 7 – INTERPRETATIONS AND ADDENDA

7.01 All questions about the meaning or intent of the Bidding Documents are to be submitted to the Issuing Office, attention Kathryn R. Hobin, Purchasing Agent, via fax 617-376-1074 or email (khobin@quincyma.gov with a copy to Kim Trillcott (kimtrillcott@quincyma.gov.

7.02 **The deadline for questions is 4:00 p.m. on May 9, 2014**. Only questions answered by Addenda will be binding. Oral and other interpretations or clarifications will be without legal effect. Interpretations or clarifications considered necessary in response to such questions will be issued by Addenda.

Based on EJCDC C-200 Suggested Instructions to Bidders for Construction Contracts
Copyright © 2007 National Society of Professional Engineers for EJCDC. All rights reserved.

7.03 Addenda may be issued to clarify, correct, or change the Bidding Documents as deemed advisable by Owner or Engineer, will be available for examination at the Issuing Office and will be posted on the website at the location indicated in Article 2 and will not be mailed or faxed to registered Bidders. It is each Bidder's responsibility to check the website for Addenda.

ARTICLE 8 – BID SECURITY

8.01 A Bid must be accompanied by Bid security made payable to Owner in an amount of 5 percent of Bidder's maximum Bid price and in the form of a certified check, treasurer's or cashier's check, or money order, or a Bid bond (on the form included in the Bidding Documents in Section 00 43 13) issued by a surety meeting the requirements of Paragraphs 5.01 and 5.02 of the Standard General and Supplementary Conditions and the Additional Supplementary Conditions (if any).

8.02 The Bid security of the Successful Bidder will be retained until such Bidder has furnished the required contract security, met the conditions of the Notice of Intent to Award (if any) and Notice of Award, and executed the Contract Documents, whereupon the Bid security will be returned. If the Successful Bidder fails to comply with the conditions set forth in the Notice of Intent to Award (if any) and Notice of Award within the time specified therein, Owner may consider Bidder to be in default, annul the Notice of Award, and the Bid security of that Bidder will be forfeited. Such forfeiture shall be Owner's exclusive remedy if Bidder defaults. The Bid security of other Bidders whom Owner believes to have a reasonable chance of receiving the award may be retained by Owner until the earlier of 7 days after the Effective Date of the Agreement or 91 days after the Bid opening, whereupon Bid security furnished by such Bidders will be returned.

8.03 Bid security of other Bidders whom Owner believes do not have a reasonable chance of receiving the award will be returned within 5 days after the Bid opening.

ARTICLE 9 – CONTRACT TIMES

9.01 The number of days within which, or the dates by which, the Work is to be substantially completed and ready for final payment are set forth in the Agreement.

ARTICLE 10 – LIQUIDATED DAMAGES

10.01 Provisions for liquidated damages, if any, are set forth in the Agreement.

ARTICLE 11 – SUBSTITUTE AND "OR-EQUAL" ITEMS

11.01 The Contract, if awarded, will be on the basis of materials and equipment specified or described in the Bidding Documents without consideration of possible substitute or "or-equal" items. Whenever it is specified or described in the Bidding Documents that a substitute or "or-equal" item of material or equipment may be furnished or used by Contractor if acceptable to Engineer,

Based on EJCDC C-200 Suggested Instructions to Bidders for Construction Contracts
Copyright © 2007 National Society of Professional Engineers for EJCDC. All rights reserved.

application for such acceptance will not be considered by Engineer until after the Effective Date of the Agreement.

ARTICLE 12 – SUBCONTRACTORS, SUPPLIERS AND OTHERS

12.01 The Bidding Documents may require the identity of certain Subcontractors, Suppliers, individuals, or entities to be submitted to Owner with the Bid.

12.02 As required in the Bidding Documents, or within 5 days after Bid opening if requested by Owner, Bidder shall submit a listing and experience statement with pertinent information regarding similar projects and other evidence of qualification for each Subcontractor, Supplier, individual, or entity. If Owner or Engineer, after due investigation, has reasonable objection to any proposed Subcontractor, Supplier, individual, or entity, Owner may, before the Notice of Award is given, request apparent Successful Bidder to submit a substitute without an increase in the Bid.

12.03 If apparent Successful Bidder declines to make any such substitution, Owner may award the Contract to the next lowest Bidder that proposes to use acceptable Subcontractors, Suppliers, individuals, or entities. Declining to make requested substitutions will not constitute grounds for forfeiture of the Bid security of any Bidder. Any Subcontractor, Supplier, individual, or entity so listed and against which Owner or Engineer makes no written objection prior to the giving of the Notice of Award will be deemed acceptable to Owner and Engineer subject to revocation of such acceptance after the Effective Date of the Agreement as provided in Paragraph 6.06 of the Standard General and Supplementary Conditions and the Additional Supplementary Conditions (if any).

12.04 Contractor shall not be required to employ any Subcontractor, Supplier, individual, or entity against whom Contractor has reasonable objection.

ARTICLE 13 – PREPARATION OF BID

13.01 The Bid Form and Supplements are included with the Bidding Documents.

13.02 Bids are to be submitted as indicated in the Bid Form. All blanks on the Bid Form shall be completed in ink or typewritten and the Bid Form signed in ink. Erasures or alterations shall be initialed in ink by the person signing the Bid Form.

13.03 A Bid by a corporation shall be executed in the corporate name by the president or a vice-president or other corporate officer accompanied by evidence of authority to sign. The corporate seal shall be affixed and attested by the secretary or an assistant secretary. The corporate address and state of incorporation shall be shown.

13.04 A Bid by a partnership shall be executed in the partnership name and signed by a partner (whose title must appear under the signature), accompanied by evidence of authority to sign. The official address of the partnership shall be shown.

Based on EJCDC C-200 Suggested Instructions to Bidders for Construction Contracts
Copyright © 2007 National Society of Professional Engineers for EJCDC. All rights reserved.

13.05 A Bid by a limited liability company shall be executed in the name of the firm by a member and accompanied by evidence of authority to sign. The state of formation of the firm and the official address of the firm shall be shown.

13.06 A Bid by an individual shall show the Bidder's name and official address.

13.07 A Bid by a joint venture shall be executed by each joint venturer in the manner indicated on the Bid Form. The official address of the joint venture shall be shown.

13.08 All names shall be printed in ink below the signatures**.**

13.09 The Bid shall contain an acknowledgment of receipt of all Addenda, the numbers of which shall be filled in on the Bid Form.

13.10 Postal and e-mail addresses and telephone numbers for communications regarding the Bid shall be shown.

13.11 The Bid shall contain evidence of Bidder's authority and qualification to do business in the state where the Project is located, or Bidder shall covenant in writing to obtain such authority and qualification prior to award of the Contract and attach such covenant to the Bid. See Section 00 22 13 for any additional requirements. Bidder's state contractor license number, if any, shall also be shown on the Bid Form.

13.12 Bidders are advised to carefully review those portions of the Bid Form and Supplements requiring Bidder's representations and certifications that are to be submitted with a Bid or subsequent to the Bid opening, and made a condition of the Bid.

ARTICLE 14 – BASIS OF BID; COMPARISON OF BIDS

14.01 Bid Pricing

A. Bidders shall submit a Bid on a unit price basis for each item of Work listed in the Bid Form based on the Unit Prices Form. Bid prices shall be stated in both words and figures.

B. The total of all prices will be the sum of the products of the estimated quantity of each item and the corresponding unit price included in the Unit Prices Form. The final quantities and Contract Price will be determined in accordance with Paragraph 11.03 of the Standard General and Supplementary Conditions and the Additional Supplementary Conditions (if any).

C. Discrepancies between prices written in words and prices written in figures will be resolved in favor of prices written in words. Discrepancies between the multiplication of units of Work and unit prices will be resolved in favor of the unit prices. Discrepancies between the indicated sum of any column of figures and the correct sum thereof will be resolved in favor of the correct sum.

Based on EJCDC C-200 Suggested Instructions to Bidders for Construction Contracts
Copyright © 2007 National Society of Professional Engineers for EJCDC. All rights reserved.

D. Include a separate price for each alternate described in the Bidding Documents as provided for in the Bid Form and Supplements.

ARTICLE 15 – SUBMITTAL OF BID

15.01 With each copy of the Bidding Documents, a Bidder is furnished a copy of the Bid Form and Supplements, and the Bid Bond Form. **An original signed hard copy** of the Bid Form and Supplements (as listed in the Bid Submittal Checklist), the Bid Submittal Checklist, and the original of the Bid security are to be completed and submitted to the Issuing Office.

15.02 A Bid shall be submitted no later than the date and time prescribed and at the place indicated in the Advertisement for Bids and shall be enclosed in a plainly marked package with the Project title, the name and address of Bidder, and shall be accompanied by the Bid security and other required documents. If a Bid is sent by mail or other delivery system, the sealed envelope containing the Bid shall be enclosed in a separate package plainly marked on the outside with the notation "BID ENCLOSED." A Bid sent by mail or courier shall be addressed to the Issuing Office. Bidders shall be responsible to confirm the ability of overnight mailing or courier services to deliver to the Issuing Office.

ARTICLE 16 – MODIFICATION AND WITHDRAWAL OF BID

16.01 A Bid may be modified or withdrawn by an appropriate document duly executed in the same manner that a Bid must be executed and delivered to the place where Bids are to be submitted prior to the date and time for the opening of Bids.

16.02 If within 24 hours after Bids are opened any Bidder files a duly signed written notice with Owner and promptly thereafter demonstrates to the reasonable satisfaction of Owner that there was a material and substantial mistake in the preparation of its Bid, that Bidder may withdraw its Bid, and the Bid security will be returned. Thereafter, if the Work is re-Bid, that Bidder will be disqualified from submitting a Bid on the Work.

ARTICLE 17 – OPENING OF BIDS

17.01 Bids will be opened at the time and place indicated in the Advertisement for Bids and, unless obviously non-responsive, read aloud publicly.

ARTICLE 18 – BIDS TO REMAIN SUBJECT TO ACCEPTANCE

18.01 All Bids will remain subject to acceptance for the period of time stated in the Bid Form, but Owner may, in its sole discretion, release any Bid and return the Bid security prior to the end of this period.

Based on EJCDC C-200 Suggested Instructions to Bidders for Construction Contracts
Copyright © 2007 National Society of Professional Engineers for EJCDC. All rights reserved.

ARTICLE 19 – EVALUATION OF BIDS

19.01 More than one Bid for the same Work from an individual or entity under the same or different names will not be considered. Reasonable grounds for believing that any Bidder has an interest in more than one Bid for the Work may be cause for disqualification of that Bidder and the rejection of all Bids in which that Bidder has an interest.

19.02 In evaluating Bids, Owner will consider whether or not the Bids comply with the prescribed requirements, and such alternates, unit prices and other data as may be requested in the Bid Form or prior to the Notice of Award.

19.03 In evaluating Bidders, Owner will consider the qualifications of Bidders and may consider the qualifications and experience of Subcontractors, Suppliers, and other individuals or entities proposed for those portions of the Work for which the identity of Subcontractors, Suppliers, and other individuals or entities are submitted.

19.04 Owner may also consider the operating costs, maintenance requirements, performance data and guarantees of major items of materials and equipment proposed for incorporation in the Work when such data is required to be submitted prior to the Notice of Award.

19.05 Owner may conduct such investigations as Owner deems necessary to establish the responsibility, qualifications, and financial ability of Bidders, proposed Subcontractors, Suppliers, individuals, or entities proposed for those portions of the Work in accordance with the Contract Documents.

19.06 Owner may conduct reference checks for the projects listed by the Bidder. Poor references may be a basis for deeming Bidder as not responsible. Reference questions will include, but are not limited to, product quality and durability, overall work quality, performance, timely delivery/completion, customer service, and general customer satisfaction.

19.07 Owner reserves the right to reject any or all Bids, including without limitation, nonconforming, nonresponsive, unbalanced, or conditional Bids. Owner further reserves the right to reject the Bid of any Bidder whom it finds, after reasonable inquiry and evaluation, to not be responsible (based on poor references or otherwise) or eligible or does not meet the specified qualification or quality requirements. Owner may also reject the Bid of any Bidder if Owner believes that it would not be in the best interest of the Project or public to make an award to that Bidder. Owner also reserves the right to waive all informalities not involving price, time, or changes in the Work and to negotiate Contract terms with the Successful Bidder.

19.08 Additional statutory requirements, if any, are included Section 00 22 13, Supplementary Instructions to Bidders.

Based on EJCDC C-200 Suggested Instructions to Bidders for Construction Contracts
Copyright © 2007 National Society of Professional Engineers for EJCDC. All rights reserved.

ARTICLE 20 – AWARD OF CONTRACT

20.01 If the Contract is to be awarded, Owner may award the Contract to the responsive, responsible, and eligible Bidder, offering the lowest price for the Bid and whose Bid is in the best interests of the Project or public.

ARTICLE 21 – CONTRACT SECURITY AND INSURANCE

21.01 Article 5 of the Standard General and Supplementary Conditions and the Additional Supplementary Conditions (if any); set forth Owner's requirements as to performance and payment bonds and insurance. The Successful Bidder shall deliver such bonds and evidence of insurance coverage within 10 days of receipt of the Notice of Award.

ARTICLE 22 – SIGNING OF AGREEMENT

22.01 The Owner will issue a Notice Award to the Successful Bidder in the form included in Bidding Documents. Within 10 days of receipt of the Notice of Award, the Successful Bidder shall comply with the conditions precedent and provide requested information. Based on required reviews and approvals, Owner will thereafter provide the required number of counterparts of the Agreement and other Contract Documents which are identified in the Agreement. The Successful Bidder shall sign and deliver the required number of counterparts of the Agreement and other Contract Documents to Owner within the time specified by the Owner. After obtaining required reviews and approvals for Contract execution, Owner shall return one fully signed counterpart the Agreement and other Contract Documents.

ARTICLE 23 – RETAINAGE

23.01 Provisions concerning retainage are set forth in the Agreement.

ARTICLE 24 – EQUAL EMPLOYMENT OPPORTUNITY, ANTI-DISCRIMINATION, AND AFFIRMATIVE ACTION

24.01 Provisions regarding the requirements for Equal Employment Opportunity, Anti-discrimination, and Affirmative Action Programs are set forth in Section 00 73 37 of the Additional Supplementary Conditions.

ARTICLE 25 – CONTRACTOR'S WARRANTY AND GUARANTEES; CORRECTION PERIOD

25.01 Provisions concerning Contractor's general warranty and guarantees and correction period are set forth in Articles 6.19, 13.06, and 13.07 of the Standard General and Supplementary Conditions and the Additional Supplementary Conditions (if any).

Based on EJCDC C-200 Suggested Instructions to Bidders for Construction Contracts
Copyright © 2007 National Society of Professional Engineers for EJCDC. All rights reserved.

ARTICLE 26 – SAFETY AND HEALTH REGULATIONS

26.01 This Project is subject to the Safety and Health Regulations of the U.S. Department of Labor set forth in Title 29 CFR, Part 1926 and to all subsequent amendments and other requirements identified in Section 00 73 19 of the Additional Supplementary Conditions.

ARTICLE 27 – SUPPLEMENTARY INSTRUCTIONS TO BIDDERS

27.01 Supplementary Instructions to Bidders, if any, are included in Section 00 22 13 and may include certain provisions required by Laws and Regulations. Bidders are responsible to determine and obtain applicable Laws and Regulations and to review and interpret the full text of such Laws and Regulations.

END OF SECTION

Based on EJCDC C-200 Suggested Instructions to Bidders for Construction Contracts
Copyright © 2007 National Society of Professional Engineers for EJCDC. All rights reserved.

SECTION 00 22 13

SUPPLEMENTARY INSTRUCTIONS TO BIDDERS

The following supplement or modify the Instructions to Bidders pursuant to Article 27 therein. This section does not represent or reflect all applicable Laws and Regulations and may only include excerpts, portions, and para-phrasing of certain Laws and Regulations. Bidders are solely responsible to determine, obtain, review and interpret the full text of applicable Laws and Regulations.

1.01 Applicable Laws for Bid and Award; General

A. This Contract is being bid under the provisions of *Chapter 30, Section 39M, Contracts for construction and materials; manner of awarding.*

1.02 Additional Defined Terms

A. *Bid security* – Also "bid deposit" as used in MGL Chapter 30, Section 39M.

B. *Lowest Responsible and Eligible Bidder* –the Bidder: whose Bid is the lowest of those Bidders possessing the skill, ability and integrity necessary for the faithful performance of the Work; who shall certify its ability to furnish labor that can work in harmony with all other elements of labor employed or to be employed in the Work; who shall certify that all employees to be employed at the Work Site will have successfully completed a course in construction safety and health approved by the United States Occupational Safety and Health Administration that is at least 10 hours in duration at the time the employee begins Work, and who shall furnish documentation of successful completion of said course with the first certified payroll report for each employee (if awarded a Contract); and who obtains within 10 days of the Notice of Award, the bonds required by the Standard General and Supplementary Conditions and the Additional Supplementary Conditions (consistent with the security by bond required under Chapter 149 Section 29), provided that for the purposes of this Section the term "security by bond" shall mean the bond of a surety company qualified to do business under the laws of the Commonwealth and satisfactory to the Owner and if there is more than 1 surety company, the surety companies shall be jointly and severally liable, in accordance with the provisions of Chapter 30, Section 39M.

1.03 Requirements of the MGL Applicable to the Project

A. **Foreign Corporations**: The provisions of *MGL Chapter 30, Section 39L, Public construction work by foreign corporations; restrictions and reports* apply to this Project. If a Bidder is a foreign corporation, it shall provide with its Bid, a certificate of the state secretary stating that the corporation has complied with requirements of Section 15.03 of subdivision A of Part 15 of chapter 156D and the date of compliance, and further has filed all annual reports required by Section 16.22 of subdivision B of Part 16 of said chapter 156D, and further, will provide such certificate for each Subcontractor that is a foreign corporation if it receives a Notice of Award. See Section 00 45 05 of the Bidding Requirements.

B. **Debarment:** Bidders shall not be debarred from doing public construction work in the Commonwealth of Massachusetts under the provisions of *MGL Chapter 129, Section 129F, Debarment from bidding; definitions; lists; notice; affiliates; mitigating circumstances*, or any other applicable debarment provisions of any other chapter of the MGL or any rule or regulations promulgated thereunder.

C. **Labor Preferences and Work Hours**

1. The provisions of *MGL Chapter 149, Section 26 Public works; preference to veterans and citizens; wages* apply to this Project whereby employment in the construction of public works is subject to preference being given to citizens of the Commonwealth of Massachusetts, service-disabled veterans, and citizens of the United States.

2. The provisions of *MGL Chapter 149, Sections 27 to 27D*, as amended, covering minimum wage rates as determined by the Commissioner of Department of Workforce Development, apply to this Project. It is the responsibility of the Bidders, before Bid opening, to request if necessary, any additional information on Minimum Wage Rates for those trades people who may be employed for the proposed Work under the resulting Contract. See Additional Supplementary Conditions.

3. The provisions of *MGL Chapter 149, Section 30 Eight hour day and six day week; emergencies; work on highways* and *Section 34 Public contracts; stipulation as to hours and days of work; void contracts* apply to this Project which regulate work hours for public construction.

4. The provisions of *MGL Chapter 149, Section 179A Preference to citizens in awarding public work contracts, violations* apply to this Project whereby award of contracts for public work is subject to preference shall be given to persons who are citizens of the United States.

D. **Sales Tax Exemption:** *MGL Chapter 64H, Section 6 Exemptions, paragraph (f)* exempts from Commonwealth of Massachusetts sales tax, building materials and supplies to be used in the Project, and Bidder shall not include any amount therefor. The words "building materials and supplies" shall include all materials and supplies consumed, employed or expended in the construction, reconstruction, alteration, remodeling or repair of any building, structure, public highway, bridge, or other such public work, as well as such materials and supplies physically incorporated therein. Said words shall also include rental charges for construction vehicles, equipment and machinery rented specifically for use on the Project Site, or while being used exclusively for the transportation of materials for the Project.

E. **Safety and Health:** This Project is subject to Massachusetts Department of Labor and Industries, Division of Occupational Safety *454 CMR 10.00 et seq.* "*Construction Industry Rules and Regulations*"; Massachusetts Department of Public Safety *520 CMR 14.00 et seq.* "*Excavation and Trench Safety*"; *MGL Chapter 82, The Laying Out, Alteration, Relocation and Discontinuance Of Public Ways, and Specific Repairs Thereon, MGL Chapter 82A, Excavation and Trench Safety,* and *MGL Chapter 149 Section 129A, Shoring Trenches for local governments*.

1.04 Requirements of the City of Quincy

A. Bidders shall submit information per Section 00 45 13 regarding any labor disputes during the past 5 years.

B. Bidders shall certify compliance with the requirements set forth in Section 00 73 37 regarding Equal Employment Opportunity, Anti-discrimination, and Affirmative Action Programs and employment preference required by Quincy Code of Ordinances, Section 12.28 and submission of information required in Section 00 43 40.

END OF SECTION

This page intentionally left blank

SECTION 00 41 01

BID FORM

ARTICLE 1 – DEFINED TERMS

1.01 The terms used in this Bid with initial capital letters have the meanings stated in the Instructions to Bidders, the Standard General and Supplementary Conditions, and the Additional Supplementary Conditions, if any.

ARTICLE 2 – BID RECIPIENT

2.01 This Bid is submitted to:

City of Quincy Massachusetts
Purchasing Department
Quincy City Hall
1305 Hancock Street
Quincy, MA 02169

2.02 The undersigned Bidder proposes and agrees, if this Bid is accepted, to enter into an Agreement with Owner in the form included in the Bidding Documents to perform all Work as specified or indicated in the Bidding Documents for the prices and within the times indicated in this Bid and in accordance with the other terms and conditions of the Bidding Documents.

ARTICLE 3 – BIDDER'S ACKNOWLEDGEMENTS

3.01 Bidder accepts all of the terms and conditions of the Bidding Documents including, without limitation:

A. those dealing with disposition of Bid security;

B. those included in the Supplementary Instructions to Bidders;

C. insurance and bonding requirements (Payment Bond and Performance Bond each equal to 100% of the total Contract Price) set forth in the Standard General and Supplementary Conditions and Additional Supplementary Conditions, if any;

D. Contract Times as set forth in the Agreement; and

E. provisions for liquidated damages as set forth in the Agreement.

3.02 This Bid will remain subject to acceptance for 90 days after the Bid opening or for such longer period of time that Bidder may agree to in writing upon request of Owner.

Based on EJCDC C-410 Suggested Bid Form for Construction Contracts
Copyright © 2007 National Society of Professional Engineers for EJCDC. All rights reserved.

ARTICLE 4 – BIDDER'S REPRESENTATIONS

4.01 In submitting this Bid, Bidder represents that:

A. Bidder has examined and carefully studied the Bidding Documents, other related data identified in the Bidding Documents, and the following Addenda, receipt of which is hereby acknowledged:

Addendum No.	Addendum Date
_____	_____
_____	_____
_____	_____
_____	_____
_____	_____

B. Bidder has visited the Site and become familiar with and is satisfied as to the general, local, and Site conditions that may affect cost, progress, and performance of the Work.

C. Bidder is familiar with and is satisfied as to all Laws and Regulations that may affect cost, progress, and performance of the Work.

D. Bidder has carefully studied all: (1) reports of explorations and tests of subsurface conditions at or contiguous to the Site and all drawings of physical conditions relating to existing surface or subsurface structures at the Site (except Underground Facilities) that have been identified in Section 00 73 10 of the Additional Supplementary Conditions Paragraph 4.02 as containing reliable "technical data," and (2) reports and drawings of Hazardous Environmental Conditions, if any, at the Site that have been identified in Section 00 73 10 of the Additional Supplementary Conditions Paragraph 4.06 as containing reliable "technical data."

E. Bidder has considered the information known to Bidder; information commonly known to contractors doing business in the locality of the Site; information and observations obtained from visits to the Site; the Bidding Documents; and the Site-related reports and drawings identified in the Bidding Documents, with respect to the effect of such information, observations, and documents on (1) the cost, progress, and performance of the Work; (2) the means, methods, techniques, sequences, and procedures of construction to be employed by Bidder, including applying the specific means, methods, techniques, sequences, and procedures of construction expressly required by the Bidding Documents; and (3) Bidder's safety precautions and programs.

Based on EJCDC C-410 Suggested Bid Form for Construction Contracts
Copyright © 2007 National Society of Professional Engineers for EJCDC. All rights reserved.

F. Based on the information and observations referred to in Paragraph 4.01.E above, Bidder does not consider that further examinations, investigations, explorations, tests, studies, or data are necessary for the determination of this Bid for performance of the Work at the price(s) bid and within the times required, and in accordance with the other terms and conditions of the Bidding Documents.

G. Bidder is aware of the general nature of work to be performed by Owner and others at the Site that relates to the Work as indicated in the Bidding Documents.

H. Bidder has given Engineer written notice of all conflicts, errors, ambiguities, or discrepancies that Bidder has discovered in the Bidding Documents, and the written resolution thereof by Engineer is acceptable to Bidder.

I. The Bidding Documents are generally sufficient to indicate and convey understanding of all terms and conditions for the performance of the Work for which this Bid is submitted.

ARTICLE 5 – BASIS OF BID

5.01 Bidder will complete the Work in accordance with the Contract Documents for the following price(s) based on unit prices included in Section 00 43 22 Unit Prices Form.

BID PRICES SHALL EXCLUDE SALES AND USE TAX.

TOTAL BID PRICE (based on Unit Prices Form)

_____

_____

_____ Dollars and _____/100
(Use words) $_____
(Use figures)

5.02 Unit Prices have been computed in accordance with Paragraph 11.03.A of the Standard General and Supplementary Conditions and Additional Supplementary Conditions, if any.

5.03 Bidder acknowledges that estimated quantities are not guaranteed, and are solely for the purpose of comparison of Bids, and final payment for unit price items will be based on actual quantities determined and based on the unit prices included in Section 00 43 22, as provided in the Standard General and Supplementary Conditions and Additional Supplementary Conditions, if any.

5.04 Contract Price Modifications

Based on EJCDC C-410 Suggested Bid Form for Construction Contracts
Copyright © 2007 National Society of Professional Engineers for EJCDC. All rights reserved.

Additional Work may be provided for the following prices based on unit prices included in Section 00 43 22.01 Unit Prices Form for Additional Work. This work is separate from the Work of the base Contract and pricing will be included in the Agreement for Contract Price Modifications, separate from and not included in the Total Contract Price.

Prices below will be used in determining responsiveness, but will not be used in evaluating Bidder's base Bid price.

PRICES EXCLUDE SALES AND USE TAX

CONTRACT PRICE MODIFICATION 1 (based on Unit Prices Form for Additional Work)

_____

_____

_____ Dollars and _____/100 $_____
(Use words) *(Use figures)*

Based on EJCDC C-410 Suggested Bid Form for Construction Contracts
Copyright © 2007 National Society of Professional Engineers for EJCDC. All rights reserved.

ARTICLE 6 – TIME OF COMPLETION

6.01 Bidder agrees that the Work will be substantially complete and will be completed and ready for final payment in accordance with Paragraph 14.07 of the Standard General and Supplementary Conditions and Additional Supplementary Conditions, if any, on or before the dates or within the number of calendar days indicated in the Agreement.

6.02 Bidder accepts the provisions of the Agreement as to liquidated damages.

ARTICLE 7 – ATTACHMENTS TO THIS BID

7.01 The following documents are submitted with and made a condition of this Bid:

00 43 13 Bid Security Form
OR
Required Bid security in the form of _____

00 43 22 Unit Prices Form

00 43 22.01 Unit Prices Form for Additional Work

00 43 36 Proposed Subcontractors Form

00 43 37 Proposed Suppliers Form

00 43 40 Information, Schedules and Data

00 43 93 Bid Submittal Checklist

00 45 05 Bidder’s Representations and Certifications

00 45 13 Bidder's Qualifications

00 45 19 Non-collusion Affidavit

Based on EJCDC C-410 Suggested Bid Form for Construction Contracts
Copyright © 2007 National Society of Professional Engineers for EJCDC. All rights reserved.

ARTICLE 8 – BID SUBMITTAL

8.01 This Bid is submitted by:

An Individual

By _____
(Individual's Name)

doing business as _____

Business Address

_____

Telephone & Facsimile No. _____

A Partnership

By _____
(Firm Name)

_____
(General Partner)

Business Address

_____

Telephone & Facsimile No. _____

A Corporation

By _____
(Corporation Name)

State of Incorporation _____

By _____
(Name of Person Authorized to Sign)

Title _____

Corporate Seal

Attest _____
(Secretary)

Business Address

_____

Telephone & Facsimile No. _____
Date of Qualification to do Business as out-of-state corporation: _____

Based on EJCDC C-410 Suggested Bid Form for Construction Contracts
Copyright © 2007 National Society of Professional Engineers for EJCDC. All rights reserved.

A Joint Venture

By _____
(Name)

_____
(Address)

By _____
(Name)

_____
(Address)

By _____
(Name)

_____
(Address)

Business Address

_____

Telephone & Facsimile No. _____

(Each joint venturer must sign. The manner of signing for each individual, partnership and corporation that is a party to the joint venture should be in the manner indicated above.)

Based on EJCDC C-410 Suggested Bid Form for Construction Contracts
Copyright © 2007 National Society of Professional Engineers for EJCDC. All rights reserved.

SUBMITTED ON:
State License No. (if applicable)
EIN/FEIN:

Communications concerning this Bid shall be addressed to:

Name _____

Title _____

Address _____

_____

Telephone No. _____

Facsimile No. _____

Email _____

Based on EJCDC C-410 Suggested Bid Form for Construction Contracts
Copyright © 2007 National Society of Professional Engineers for EJCDC. All rights reserved.

SECTION 00 43 13
BID SECURITY FORM

Based on EJCDC C-430 Bid Bond (Penal Sum Form) prepared by the Engineers Joint Contract Documents Committee

Any singular reference to Bidder, Surety, Owner or other party shall be considered plural where applicable.

BIDDER *(Name and Address)*:

SURETY *(Name and Address of Principal Place of Business)*:

OWNER *(Name and Address)*:

BID
Bid Due Date:
Description *(Project Name and Include Location)*:

BOND
Bond Number:
Date *(Not earlier than Bid due date)*:
Penal sum _____ $ _____
(Words) (Figures)

Surety and Bidder, intending to be legally bound hereby, subject to the terms set forth below, do each cause this Bid Bond to be duly executed by an authorized officer, agent, or representative.

BIDDER	**SURETY**
_____ (Seal)	_____ (Seal)
Bidder's Name and Corporate Seal	Surety's Name and Corporate Seal
By: _____	By: _____
Signature	Signature (Attach Power of Attorney)
_____	_____
Print Name	Print Name
_____	_____
Title	Title
Attest: _____	Attest: _____
Signature	Signature
_____	_____
Title	Title

Note: Above addresses are to be used for giving any required notice. Provide execution by any additional parties, such as joint venturers, if necessary.

1. Bidder and Surety, jointly and severally, bind themselves, their heirs, executors, administrators, successors, and assigns to pay to Owner upon default of Bidder the penal sum set forth on the face of this Bond. Payment of the penal sum is the extent of Bidder's and Surety's liability. Recovery of such penal sum under the terms of this Bond shall be Owner's sole and exclusive remedy upon default of Bidder.

2. Default of Bidder shall occur upon the failure of Bidder to deliver within the time required by the Bidding Documents (or any extension thereof agreed to in writing by Owner) the executed Agreement required by the Bidding Documents and any performance and payment bonds required by the Bidding Documents.

3. This obligation shall be null and void if:

3.1 Owner accepts Bidder's Bid and Bidder delivers within the time required by the Bidding Documents (or any extension thereof agreed to in writing by Owner) the executed Agreement required by the Bidding Documents and any performance and payment bonds required by the Bidding Documents, or

3.2 All Bids are rejected by Owner, or

3.3 Owner fails to issue a Notice of Award to Bidder within the time specified in the Bidding Documents (or any extension thereof agreed to in writing by Bidder and, if applicable, consented to by Surety when required by Paragraph 5 hereof).

4. Payment under this Bond will be due and payable upon default of Bidder and within 30 calendar days after receipt by Bidder and Surety of written notice of default from Owner, which notice will be given with reasonable promptness, identifying this Bond and the Project and including a statement of the amount due.

5. Surety waives notice of any and all defenses based on or arising out of any time extension to issue Notice of Award agreed to in writing by Owner and Bidder, provided that the total time for issuing Notice of Award including extensions shall not in the aggregate exceed 120 days from Bid due date without Surety's written consent.

6. No suit or action shall be commenced under this Bond prior to 30 calendar days after the notice of default required in Paragraph 4 above is received by Bidder and Surety and in no case later than one year after Bid due date.

7. Any suit or action under this Bond shall be commenced only in a court of competent jurisdiction located in the state in which the Project is located.

8. Notices required hereunder shall be in writing and sent to Bidder and Surety at their respective addresses shown on the face of this Bond. Such notices may be sent by personal delivery, commercial courier, or by United States Registered or Certified Mail, return receipt requested, postage pre-paid, and shall be deemed to be effective upon receipt by the party concerned.

9. Surety shall cause to be attached to this Bond a current and effective Power of Attorney evidencing the authority of the officer, agent, or representative who executed this Bond on behalf of Surety to execute, seal, and deliver such Bond and bind the Surety thereby.

10. This Bond is intended to conform to all applicable statutory requirements. Any applicable requirement of any applicable statute that has been omitted from this Bond shall be deemed to be included herein as if set forth at length. If any provision of this Bond conflicts with any applicable statute, then the provision of said statute shall govern and the remainder of this Bond that is not in conflict therewith shall continue in full force and effect.

11. The term "Bid" as used herein includes a Bid, offer, or proposal as applicable.

SECTION 00 43 22

UNIT PRICES FORM

Provide unit pricing for each Bid item in both words and figures. Provide Bid item totals in figures. Discrepancies between prices written in words and prices written in figures will be resolved in favor of prices written in words. Discrepancies between the multiplication of estimated quantities and unit prices will be resolved in favor of the unit prices.

Item No.	Unit or Lump Sum Price in Written Words	Estimated Quantity	Unit Bid Price	Extended Cost Figures
1	12 Inch PVC Pipe (SDR 35) @ _____Dollars and _____Cents	100 LF		
2	12 Inch Watertight HDPE Pipe @ _____Dollars and _____Cents	254 LF		
3	15 Inch Watertight HDPE Pipe @ _____Dollars and _____Cents	158 LF		
4	18 Inch Watertight HDPE Pipe @ _____Dollars and	6 LF		
5	Subsurface Stormwater Mitigation Facility @ _____Dollars and _____Cents	1 Lump Sum		

Item No.	Unit or Lump Sum Price in Written Words	Estimated Quantity	Unit Bid Price	Extended Cost Figures
6	Catch basin (4' Dia.) @ _____Dollars and _____Cents	1 EA		
7	Outlet Control Double Catch basin (6' sq.) @ _____Dollars and _____Cents	1 EA		
8	Drainage Manhole @ _____Dollars and _____Cents	2 EA		
9	Remove & Reset Headwall @ _____Dollars and _____Cents	1 EA		
10	Drainage Manhole Frame and Cover @ _____Dollars and _____Cents	2 EA		
11	Catch Basin Frame and Grate @ _____Dollars and _____Cents	1 EA		
12	Double Catch Basin Frame and Grate @ _____Dollars and _____Cents	1 EA		

Item No.	Unit or Lump Sum Price in Written Words	Estimated Quantity	Unit Bid Price	Extended Cost Figures
13	Granite Curb Type VA-3 Straight & Curved @ _____Dollars and _____Cents	605 LF		
14	Remove & Reset Granite Curb @ _____Dollars and _____Cents	153 LF		
15	Hot Mix Asphalt Curb: Type 2 @ _____Dollars and _____Cents	130 LF		
16	Pre-cast Concrete Curb @ _____Dollars and _____Cents	92 LF		
17	Concrete Sidewalk @ _____Dollars and _____Cents	325 SY		
18	Accessible Curb Ramp @ _____Dollars and _____Cents	5 EA		
19	Hotmix Asphalt Base Course @ _____Dollars and _____Cents	500 TON		

Item No.	Unit or Lump Sum Price in Written Words	Estimated Quantity	Unit Bid Price	Extended Cost Figures
20	Hotmix Asphalt Surface Course @ _____Dollars and _____Cents	315 TON		
21	Controlled Density Fill (CDF) @ _____Dollars and _____Cents	50 CY		
22	Gravel Base @ _____Dollars and _____Cents	900 CY		
23	Loam Borrow @ _____Dollars and _____Cents	100 CY		
24	Strip, Stockpile and Reuse Ex Loam Borrow @ _____Dollars and _____Cents	100 CY		
25	Seeding @ _____Dollars and _____Cents	1870 SY		
26	Tree Protection @ _____Dollars and _____Cents	6 EA		

Item No.	Unit or Lump Sum Price in Written Words	Estimated Quantity	Unit Bid Price	Extended Cost Figures
27	Tree Remove & Dispose @ _____Dollars and _____Cents	26 EA		
28	Tree Removed, Stored, Protected & Reinstalled @ _____Dollars and _____Cents	3 EA		
29	Arborvitae Tree Provide & Install @ _____Dollars and _____Cents	62 EA		
30	Maple Tree Provide & Install @ _____Dollars and _____Cents	3 EA		
31	Screen Plantings Behind Wall @ _____Ten Thousand_____Dollars and _____Zero_____Cents	1 Contingency	$10,000.00	$10,000.00
32	Chain-link Fence 72 Inches in Height @ _____Dollars and _____Cents	800 LF		
33	Chain-link Fence 48 Inches in Height @ _____Dollars and _____Cents	370 LF		

Item No.	Unit or Lump Sum Price in Written Words	Estimated Quantity	Unit Bid Price	Extended Cost Figures
34	10 Foot Wide Chain-link Fence Lockable Swing Gate 48 Inches in Height @ _____Dollars and _____Cents	2 EA		
35	Athletic Field Netting Post 25' in Height @ _____Dollars and _____Cents	2 EA		
36	Timber Guardrail @ _____Dollars and _____Cents	80 LF		
37	Bituminous Pavement Demolition; Remove & Dispose @ _____Dollars and _____Cents	1680 SY		
38	Cement Concrete Walkways and Curb Demolition; Remove & Dispose @ _____Dollars and _____Cents	300 SY		
39	Chainlink Fence Remove & Dispose @ _____Dollars and _____Cents	558 LF		
40	Regulatory Signs @ _____Dollars and _____Cents	80 SF		

Item No.	Unit or Lump Sum Price in Written Words	Estimated Quantity	Unit Bid Price	Extended Cost Figures
41	Misc. Signs Remove & Reset @ _____Dollars and _____Cents	1 EA		
42	Remove & Dispose Sign @ _____Dollars and _____Cents	1 EA		
43	Remove & Dispose Sign Post @ _____Dollars and _____Cents	2 EA		
44	Sign Posts @ _____Dollars and _____Cents	12 EA		
45	Pavement Markings @ _____ Dollars and _____Cents	1 Lump Sum		
46	Concrete Stairs & Handrails @ _____Dollars and _____Cents	1 Lump Sum		
47	Trench Excavation Below Normal Grade @ _____Dollars and _____Cents	100 CY		

Item No.	Unit or Lump Sum Price in Written Words	Estimated Quantity	Unit Bid Price	Extended Cost Figures
48	Rock Boulder Excavation @ _____Dollars and _____Cents	50 CY		
49	6" Water Relocation @ _____Dollars and _____Cents	1 Lump Sum		
50	Gas Main Relocation @ _____Dollars and _____Cents	1 Lump Sum		
51	Additional Hours of Work Fee (Deduction) @ _____Dollars and _____Cents	0 Hours	-$130.00	
52	Traffic Police Details Ten Thousand Dollars and Zero Cents	1 Contingency	$10,000.00	$10,000.00
53	Mobilization / Demobilization @ _____Dollars and _____Cents	1 Lump Sum		

END OF SECTION

SECTION 00 43 22.01

UNIT PRICES FORM FOR ADDITIONAL WORK

A. Include a separate price for each item for Additional Work described below.

B. These prices will be used in determining responsiveness, but will not be used in evaluating Bidder's Bid price. These prices will be included in the Agreement for Contract Price Modifications for the items listed, separate from and not included in the Total Contract Price.

C. Provide unit pricing for each Contract Price Modification item in both words and figures. Provide Contract Price Modification Bid item totals in figures. Discrepancies between prices written in words and prices written in figures will be resolved in favor of prices written in words. Discrepancies between the multiplication of estimated quantities and unit prices will be resolved in favor of the unit prices.

CONTRACT PRICE MODIFICATION 1 – AS DEPICTED ON THE DRAWINGS

CPM Item No.	Unit or Lump Sum Price in Written Words	Estimated Quantity	Unit Bid Price	Extended Cost Figures
1a	Surface Stormwater Mitigation Facility @ _____Dollars and _____Cents	1 Lump Sum		

END OF SECTION

This page intentionally left blank

SECTION 00 43 36

PROPOSED SUBCONTRACTORS FORM

The following Subcontractors, other persons and organizations are proposed to be employed to furnish portions of the Work. Attach additional sheets as necessary.

CONSTRUCTION

Name	Address	Type of Construction/ Area of Responsibility	% of Total Contract

DESIGN PROFESSIONALS

Name	Address	Area of Responsibility	% of Total Contract

END OF SECTION

SECTION 00 43 37

PROPOSED SUPPLIERS FORM

The following Suppliers are proposed to furnish the identified products, material and equipment to be incorporated into the Work. Attach additional sheets as necessary.

Name	Address	Product, Material, Equipment

END OF SECTION

This page intentionally left blank

SECTION 00 43 40

INFORMATION, SCHEDULES AND DATA

INFORMATION REQUIRED BY CITY OF QUINCY

Submit the names and addresses of any individuals currently employed by the Bidder who Bidder intends to employ on the Project.

WORK PLAN

Provide a narrative work plan describing the Bidder's approach to the successful execution of the Work to accommodate the proposed Project Schedule; allow for review of submittals, coordination, compliance with required Work sequence and coordination specified in Section 01 11 10; and compliance with special requirements.

PROJECT MANAGEMENT INFORMATION

- Describe how schedule progress will be measured and tracked.
- Provide a description of how documents will be controlled to assure that the appropriate revision used in design, procurement, and construction.

SCHEDULE

Provide a proposed Project Schedule based on a Notice to Proceed on approximately June 9, 2014, Substantial Completion Date within 60 days and final completion within 90 days. Mobilization and construction shall not occur prior to the school summer recess on June 24. 2014. All construction activities and restorations shall be Final complete and contractor de-mobilized from the site by August 31 prior to the beginning of the 2014-15 school year. The schedule shall be presented in sufficient detail for the Owner to evaluate the Bidder's ability to perform the Work within the Contract Times and shall include:

- milestones related to submittal schedules, procurement, construction, and checkout & functional testing;
- sequencing to limit impacts from construction; and
- sequencing to comply with the sequencing and coordination requirements specified in Section 01 11 10.

END OF SECTION

This page intentionally left blank

SECTION 00 43 93

BID SUBMITTAL CHECKLIST

Bidder confirms that the following documents are fully completed, included in and made part of its Bid.

- ☐ 00 41 01 Bid Form
- ☐ 00 43 13 Bid Security Form

OR

- ☐ Required Bid security in the form of _____
- ☐ 00 43 22 Unit Prices Form
- ☐ 00 43 36 Proposed Subcontractors Form
- ☐ 00 43 37 Proposed Suppliers Form
- ☐ 00 43 40 Information, Schedules and Data
- ☐ 00 45 05 Bidder's Representations and Certifications
- ☐ 00 45 13 Bidder's Qualifications
- ☐ 00 45 19 Non-collusion Affidavit

Bidder to identify any Attachments below submitted by Bidder that are to be made part of its Bid. (list items below or indicate "None")

☐ One hardcopy, signed original (with original Bid security) of the above have been submitted to the Owner in accordance with Section 00 21 13.

CONFIRMED BY BIDDER ON:
By:
Authorized person per Bid Form

END OF SECTION

SECTION 00 45 05

BIDDER'S REPRESENTATIONS AND CERTIFICATIONS

The undersigned, under the penalties of perjury, represents and certifies the following which is made a condition of the Bid.

1.01 Bidder's Representations

A. Bidder has examined and carefully studied the Bidding Documents and other related data identified in the Bidding Documents.

B. Bidder has visited the Site and become familiar with and is satisfied as to the general, local, and Site conditions that may affect cost, progress, and performance of the Work.

C. Bidder is familiar with and is satisfied as to all Laws and Regulations that may affect cost, progress, and performance of the Work.

D. Bidder has carefully studied all: (1) reports of explorations and tests of subsurface conditions at or contiguous to the Site and all drawings of physical conditions relating to existing surface or subsurface structures at the Site (except Underground Facilities) that have been identified in Section 00 73 10 of the Additional Supplementary Conditions Paragraph 4.02 as containing reliable "technical data," and (2) reports and drawings of Hazardous Environmental Conditions, if any, at the Site that have been identified in Section 00 73 10 of the Additional Supplementary Conditions Paragraph 4.06 as containing reliable "technical data."

E. Bidder has considered the information known to Bidder; information commonly known to contractors doing business in the locality of the Site; information and observations obtained from visits to the Site; the Bidding Documents; and the Site-related reports and drawings identified in the Bidding Documents, with respect to the effect of such information, observations, and documents on (1) the cost, progress, and performance of the Work; (2) the means, methods, techniques, sequences, and procedures of construction to be employed by Bidder, including applying the specific means, methods, techniques, sequences, and procedures of construction expressly required by the Bidding Documents; and (3) Bidder's safety precautions and programs.

F. Based on the information and observations referred to in Paragraph.E above, Bidder does not consider that further examinations, investigations, explorations, tests, studies, or data are necessary for the determination of the Bid for performance of the Work at the price(s) bid and within the times required, and in accordance with the other terms and conditions of the Bidding Documents.

G. Bidder is aware of the general nature of work to be performed by Owner and others at the Site that relates to the Work as indicated in the Bidding Documents.

H. Bidder has given Engineer written notice of all conflicts, errors, ambiguities, or discrepancies that General Bidder has discovered in the Bidding Documents, and the written resolution thereof by Engineer is acceptable to General Bidder.

I. The Bidding Documents are generally sufficient to indicate and convey understanding of all terms and conditions for the performance of the Work for which the Bid is submitted.

1.02 Bidder's Certifications

A. The Bid is genuine and not made in the interest of or on behalf of any undisclosed individual or entity and is not submitted in conformity with any collusive agreement or rules of any group, association, organization, or corporation.

B. Bidder has not directly or indirectly induced or solicited any other Bidder to submit a false or sham Bid and has not solicited or induced any individual or entity to refrain from bidding.

C. Bidder has not engaged in corrupt, fraudulent, collusive, or coercive practices in competing for the Contract. For the purposes of this Paragraph:

1. "corrupt practice" means the offering, giving, receiving, or soliciting of anything of value likely to influence the action of a public official in the bidding process;

2. "fraudulent practice" means an intentional misrepresentation of facts made (a) to influence the bidding process to the detriment of Owner, (b) to establish Bid prices at artificial non-competitive levels, or (c) to deprive Owner of the benefits of free and open competition;

3. "collusive practice" means a scheme or arrangement between two or more Bidders, with or without the knowledge of Owner, a purpose of which is to establish Bid prices at artificial, non-competitive levels; and

4. "coercive practice" means harming or threatening to harm, directly or indirectly, persons or their property to influence their participation in the bidding process or affect the execution of the Contract.

D. The Bid is in all respects bona fide, fair and made without collusion or fraud with any other person. "Person" here means any natural person, joint venture, partnership, corporation or other business or legal entity.

E. Bidder will comply with the requirements of the Equal Employment Opportunity, Anti-discrimination, and Affirmative Action Program provisions in the Contract Documents, and if Bidder is awarded a Contract, it shall incorporate these provisions into all subcontracts and Purchase Orders so that such provisions will be binding upon each Subcontractor or Supplier.

F. Bidder will comply with the requirements of the Safety and Health provisions in the Contract Documents, and if Bidder is awarded a Contract, it shall incorporate these provisions into all subcontracts and Purchase Orders so that such provisions will be binding upon each Subcontractor or Supplier.

G. Bidder has filed a certificate from the Secretary of State of the Commonwealth of Massachusetts that the corporation has complied with requirements of section 15.03 of subdivision A of Part 15 of chapter 156D and the date of compliance, and further has filed all annual reports required by section 16.22 of subdivision B of Part 16 of said chapter 156D <u>if Bidder is a foreign corporation</u>. Bidder certifies it will provide such certificate for each Subcontractor that is a foreign corporation if it receives a Notice of Award.

H. Bidder has filed a certificate of good standing with respect to all returns due and taxes from the Secretary of State of the Commonwealth of Massachusetts certifying Bidder has complied with all laws of the relating to taxes, reporting of employees and contractors, and withholding and remitting of child support. Bidder certifies it will provide such certificate for each Subcontractor if it receives a Notice of Award.

I. Bidder certifies that if awarded the Contract, any Work involving the removal, containment, or encapsulation of asbestos or material containing asbestos will only be performed by a licensed contractor in accordance with MGL Chapter 149, Section 6BA.

J. Bidder is able to furnish labor that can work in harmony with all other elements of labor employed or to be employed in the Work and further certifies that all employees to be employed at the Work Site will have successfully completed a course in construction safety and health approved by the United States Occupational Safety and Health Administration that is at least 10 hours in duration at the time the employee begins Work and if Bidder is awarded a Contract, shall furnish documentation of successful completion of said course with the first certified payroll report for each employee.

K. Bidder is not presently debarred from doing public construction work in the Commonwealth of Massachusetts under the provisions of Massachusetts General Laws Chapter 129, Section 129F, or any other applicable debarment provisions of any other chapter of the General Laws or any rule or regulations promulgated thereunder; and is not presently debarred, suspended, proposed for debarment, declared ineligible, or voluntarily excluded from covered transactions by any Federal department or agency.

SUBMITTED ON:
By:
Authorized person per Bid Form

END OF SECTION

SECTION 00 45 13

BIDDER'S QUALIFICATIONS

The following data, statements of experience, personnel, equipment and general qualifications of the Bidder are submitted as a part of the Bid and the Bidder represents and guarantees the truthfulness and accuracy thereof and **its ability to meet the qualifications requirements specified forth in the General Requirements**. Attach additional sheets as necessary properly cross referenced,

A. Bidder's organization is a _____ (entity type) and has been in business continuously from the year _____.

B. Bidder's organization has had experience in construction comparable to that required by the Contract Documents as a prime contractor for _____ years and as a subcontractor for _____ years.

C. Following is a list of the projects Bidder's organization has completed within the last 5 years which are **similar in type, character and magnitude** to that required by the Contract.

Client/Owner Name/Address	Project Name/Location	CURRENT Contact Name, Phone, Email	Time Period

Client/Owner Name/Address	Project Name/Location	CURRENT Contact Name, Phone, Email	Time Period

D. The following supervisory personnel are currently employed by the Bidder and available for assignment to the Project (project manager, superintendents, principal foremen and engineers).

Name	Title	Years of Experience

Attach detailed resumes of qualifications, previous employers and experience for each.

E. The following design professionals and surveyors are to be employed by the Bidder and available for assignment to the Project.

Name	Area of Responsibility	Years of Experience

Attach detailed resumes of qualifications, previous employers and experience for each.

F. Bidder and Subcontractor(s) current licenses including Professional Engineers and Surveyors.

Name	State	Type	License number

G. Describe Bidder's 24 hour/7 days per week emergency response and communication capabilities.

H. Following is a list of equipment which is available for use on the Project. Indicate whether owned by Bidder's organization or rented. Attach additional sheets as necessary.

Type of Equipment	Size or Capacity	Owned or Rented

I. The names and addresses of the members of the Board of Directors of corporation, or the names and addresses of all persons and parties interested in this Bid as partners of a partnership or as individuals, are as follows.

Name	Address	Telephone No.

J. Following is a list of all projects Bidder has undertaken in the last five years which have resulted in partial or final settlement of the contract by arbitration or litigation.

Name of Client and Project	Contact Name/ Telephone No.	Original Contract Amount	Total Claims	Arbitrated or Litigated Amount of Settlement of Claims

K. Reference is hereby made to the following bank or banks as to the financial responsibility of the Bidder.

Name of Bank	Address	Contact Name and Telephone No.

L. Following is a list of safety citations issued to the Bidder over the last 3 years.

Name of Client and Project	Contact Name/ Telephone No.	Type of Citation	Issued by

M. Following is a list of labor disputes the Bidder has been the subject of, or otherwise been involved in, during the past 5 years. For these purposes, "labor disputes" shall include picketing or any other activity which disrupted or delayed the work. Attach additional sheets as necessary.

Name and Location of the Project	
Nature of the Dispute	
Duration and dates during which the dispute took place	
How the dispute was resolved	
Name and Location of the Project	
Nature of the Dispute	
Duration and dates during which the dispute took place	
How the dispute was resolved	

END OF SECTION

SECTION 00 45 19

NON-COLLUSION AFFIDAVIT

_____, being duly sworn, depose and, under the penalty of perjury, say that the following is true:

1. I am the person responsible within my firm for the final decision as to the price(s) and amount of this Bid or, if not, that I have written authorization, enclosed herewith, from that person to make the statements set out below on his or her behalf and on the behalf of my firm.

2. The price(s) and amount of this Bid have been arrived at independently, without collusion, consultation, communication, or agreement for the purpose of restricting competition with any other contractor, competitor, Bidder, or potential Bidder.

3. Unless otherwise required by law, neither the price(s) nor the amount of this Bid have been disclosed to any other firm or person who is a Bidder, competitor, or potential Bidder on this Project, and will not be so disclosed either directly or indirectly prior to Bid opening.

4. No attempt has been made or will be made to solicit, cause, or induce any firm, partnership, corporation, or person to submit or not submit a Bid on this Project, or to submit a Bid higher than the Bid of this firm, or submit an intentionally high or noncompetitive Bid or other form of complementary Bid, or for the purpose of restricting competition.

5. The Bid of my firm is made in good faith and not pursuant to any agreement or discussion with, or inducement from, any firm or person to submit a complementary Bid.

6. My firm has not offered or entered into a subcontracting agreement regarding the purchase of materials or services from any firm or person, or offered, promised, or paid cash or anything of value to any firm or person, whether in connection with this or any other Project, in consideration for an agreement or promise by any firm or person to refrain from proposing or to submit a complementary Bid on the Project.

7. My firm has not accepted nor been promised any subcontract or agreement regarding the sale of materials or services to any firm or person, and has not been promised or paid cash or anything of value to any firm or person, whether in connection with this or any other Project, in consideration for my firm's submitting a complementary Bid or agreeing to do so, on this Project.

8. I have made a diligent inquiry of all members, officers, employees, and agents of my firm with responsibilities relating to the preparation, approval, or submission of my firm's Bid on this Project and have been advised by each of them that he or she has not participated in any communication, consultation, discussion, agreement, collusion, act, or other conduct inconsistent with any of the statements and representations made in this affidavit.

_____
Company Name

_____
Signature

_____
Company Position

Date: _____

Attest: _____

Date: _____

END OF SECTION

SECTION 00 51 00
NOTICE OF AWARD

Date: _____

Project:	
Owner:	Owner's Contract No.:
Contract:	Engineer's Project No.:
Bidder:	
Bidder's Address: *[send Notice of Award Certified Mail, Return Receipt Requested]*	

You are notified that your Bid dated [_____]for the above Contract has been considered. You are the Successful Bidder and are awarded a Contract for *[Indicate total Work, alternates, or sections of Work awarded]* subject to the following conditions being met *and subject to *_____* and *required reviews* *required approvals .

The Contract Price of your Contract is _____ Dollars ($_____).

[Insert appropriate data if unit prices are used. Change language for cost-plus contracts.]

You must comply with the following conditions precedent **<u>within 10 days</u>** of the date you receive this Notice of Award.

1. Deliver the Contract security (Bonds) as specified in the Standard General and Supplementary Conditions and Additional Supplementary Conditions (Articles 2 and 5);
2. Deliver the insurance certificates indicating coverages as specified in the Standard General and Supplementary Conditions and Additional Supplementary Conditions (Articles 2 and 5);
3. Deliver the following completed and executed certifications and documents:
    a. Pursuant to MGL Chapter 30, Section 39R *Definitions; contract provisions; management and financial statements; enforcement:*
        - A statement by management on internal accounting controls;
        - A statement prepared by an independent certified public accountant; and
        - An audited financial statement for the most recent completed fiscal year.

    b. From each Subcontractor:
        - Certificate of good standing from the Secretary of State with respect to all returns due and taxes per Section 00 22 13.
        - Certification from the Secretary of State for foreign corporations per Section 00 22 13

    c. Other conditions precedent:

        LIST OTHERS IF ANY

based on EJCDC C-510 Notice of Award
Prepared by the Engineers Joint Contract Documents Committee and endorsed by the Construction Specifications Institute.

Failure to comply with the above conditions within the time specified will entitle the Owner to consider you in default, annul this Notice of Award, and declare your Bid security forfeited.

After confirming that you have complied with the above conditions *and required approvals are obtained,* Owner will deliver the conformed Contract Documents for execution.

_____
Owner

By:_____
Authorized Signature

_____
Title

Copy to Engineer

This document has important legal consequences; consultation with an attorney is encouraged with respect to its use or modification. This document should be adapted to the particular circumstances of the contemplated Project and the controlling Laws and Regulations.

SECTION 00 52 10
AGREEMENT FORM
BETWEEN OWNER AND CONTRACTOR FOR CONSTRUCTION CONTRACT

Based on the form
Prepared by

ENGINEERS JOINT CONTRACT DOCUMENTS COMMITTEE

and

Issued and Published Jointly by

AMERICAN COUNCIL OF ENGINEERING COMPANIES

ASSOCIATED GENERAL CONTRACTORS OF AMERICA

AMERICAN SOCIETY OF CIVIL ENGINEERS

PROFESSIONAL ENGINEERS IN PRIVATE PRACTICE
A Practice Division of the
NATIONAL SOCIETY OF PROFESSIONAL ENGINEERS

Endorsed by

CONSTRUCTION SPECIFICATIONS INSTITUTE

Based on EJCDC C-520 Suggested Form of Agreement Between Owner and Contractor for Construction Contract (Stipulated Price)
Copyright © 2007 National Society of Professional Engineers for EJCDC. All rights reserved.

This Suggested Form of Agreement has been prepared for use with the Standard General Conditions of the Construction Contract (EJCDC C-700, 2007 Edition). Their provisions are interrelated, and a change in one may necessitate a change in the other. The language contained in the Suggested Instructions to Bidders (EJCDC C-200, 2007 Edition) is also carefully interrelated with the language of this Agreement. Their usage is discussed in the Narrative Guide to the 2007 EJCDC Construction Documents (EJCDC C-001, 2007 Edition).

Copyright © 2007 National Society of Professional Engineers
1420 King Street, Alexandria, VA 22314-2794
(703) 684-2882
www.nspe.org

American Council of Engineering Companies
1015 15th Street N.W., Washington, DC 20005
(202) 347-7474
www.acec.org

American Society of Civil Engineers
1801 Alexander Bell Drive, Reston, VA 20191-4400
(800) 548-2723
www.asce.org

Associated General Contractors of America
2300 Wilson Boulevard, Suite 400, Arlington, VA 22201-3308
(703) 548-3118
www.agc.org

The copyright for this EJCDC document is owned jointly by the four
EJCDC sponsoring organizations and held in trust for their benefit by NSPE.

Copyright © 2007 National Society of Professional Engineers for EJCDC. All rights reserved.

SECTION 00 52 10

AGREEMENT FORM

THIS AGREEMENT is by and between the City of Quincy, Massachusetts, acting through the Department of Parks & Forestry, ("Owner") and _____ ("Contractor"). Owner and Contractor hereby agree as follows.

ARTICLE 1 – WORK

1.01 Contractor shall complete all Work as specified or indicated in the Contract Documents. The Work is generally described as the Atlantic Middle School Campus Improvements Project which consists of, but is not limited to, construction of vehicular access and parking facilities and drainage infrastructure construction and repairs. The Work includes realignment of driveway access; removal and expansion of parking lot; installation of drainage structures, open cut removal & replacement or new installation of approximately 500 linear feet of drainage pipe, installation of a subsurface stormwater mitigation facility; excavation and grading of surface stormwater mitigation facility; curb installation and curb removal and reset; sidewalk removal and replacement; fence removal and replacement; temporary bypass pumping; plugging of flows; appurtenances; excavation, trench support; backfilling; restoration; paving; environmental protection; and all materials, equipment, services and construction inherent to the Work..

ARTICLE 2 – THE PROJECT

2.01 *The Project under the Contract Documents is generally described as* "Atlantic Middle School Campus Improvements Project".

ARTICLE 3 – ENGINEER

3.01 The Project has been designed by Woodard and Curran, Inc. (Engineer) which is to act as Owner's representative, assume all duties and responsibilities, and have the rights and authority assigned to Engineer in the Contract Documents in connection with the completion of the Work in accordance with the Contract Documents.

ARTICLE 4 – CONTRACT TIMES

4.01 *Time of the Essence*

A. All time limits for Milestones, if any, Substantial Completion, and completion and readiness for final payment as stated in the Contract Documents are of the essence of the Contract.

Based on EJCDC C-520 Suggested Form of Agreement Between Owner and Contractor for Construction Contract (Stipulated Price)
Prepared by National Society of Professional Engineers for EJCDC. All rights reserved.

4.02 *Dates for Substantial Completion and Final Payment*

A. The Work shall be substantially complete within 60 calendar days from the commencement of Contract Time and completed and ready for final payment 90 calendar days from the commencement of Contract Time in accordance with Paragraph 14.07 of the Standard General and Supplementary Conditions , and Additional Supplementary Conditions, if any.

4.03 *Liquidated Damages*

A. Contractor and Owner recognize that time is of the essence as stated in Paragraph 4.01 above and that Owner will suffer financial loss if the Work is not completed within the times specified in Paragraph 4.02 above, plus any extensions thereof allowed in accordance with Article 12 of the Standard General and Supplementary Conditions, and Additional Supplementary Conditions, if any. The parties also recognize the delays, expense, and difficulties involved in proving in a legal or arbitration proceeding the actual loss suffered by Owner if the Work is not completed on time. Accordingly, instead of requiring any such proof, Owner and Contractor agree that as liquidated damages for delay (but not as a penalty), Contractor shall pay Owner **$1,200.00** for each day that expires after the time specified in Paragraph 4.02 above for Substantial Completion until the Work is substantially complete. After Substantial Completion, if Contractor shall neglect, refuse, or fail to complete the remaining Work within the Contract Time or any proper extension thereof granted by Owner, Contractor shall pay Owner **$1,200.00** for each day that expires after the time specified in Paragraph 4.02 above for completion and readiness for final payment until the Work is completed and ready for final payment.

ARTICLE 5 – CONTRACT PRICE

5.01 Owner shall pay Contractor for completion of the Work in accordance with the Contract Documents an amount in current funds equal to the sum of the amounts determined pursuant to Paragraph 5.01.A below:

TOTAL PRICE
[IN WORDS] Dollars and [# OF CENTS]/100 $[DOLLAR AMOUNT]

A. Unit Prices have been computed in accordance with Paragraph 11.03.A of the Standard General and Supplementary Conditions and Additional Supplementary Conditions, if any.

Based on EJCDC C-520 Suggested Form of Agreement Between Owner and Contractor for Construction Contract (Stipulated Price)
Prepared by National Society of Professional Engineers for EJCDC. All rights reserved.

B. The prices for Unit Price Work set forth as of the Effective Date of the Agreement are based on estimated quantities. As provided in Paragraph 11.03 of the Standard General and Supplementary Conditions, and Additional Supplementary Conditions, if any, estimated quantities are not guaranteed, and determinations of actual quantities and classifications are to be made by Engineer as provided in Paragraph 9.07 of the Standard General and Supplementary Conditions, and Additional Supplementary Conditions, if any. Final payment for unit price items will be based on actual quantities determined and based on the unit prices included in Section 00 54 00.

ARTICLE 6 – PAYMENT PROCEDURES

6.01 *Submittal and Processing of Payments*

A. Contractor shall submit Applications for Payment in accordance with Article 14 of the Standard General and Supplementary Conditions, and Additional Supplementary Conditions, if any. Applications for Payment will be processed by Engineer as provided in the Standard General and Supplementary Conditions, and Additional Supplementary Conditions, if any, and the General Requirements.

6.02 *Progress Payments; Retainage*

A. Owner shall make progress payments on account of the Contract Price on the basis of Contractor's Applications for Payment on or about the 21st day of each month during performance of the Work as provided in Paragraph 6.02.A.1 below. All such payments will be measured by the schedule of values established as provided in Paragraph 2.07.A of the Standard General and Supplementary Conditions, and Additional Supplementary Conditions, if any, (and in the case of Unit Price Work based on the number of units completed).

1. Prior to Substantial Completion, progress payments will be made in an amount equal to the percentage indicated below but, in each case, less the aggregate of payments previously made and less such amounts as Engineer may determine or Owner may withhold, including but not limited to liquidated damages, in accordance with Paragraph 14.02 of the Standard General and Supplementary Conditions, and Additional Supplementary Conditions, if any, and additional retainage allowed by Laws and Regulations.

   a. Progress Payments of 95 percent for Work completed (with the balance of 5 percent being retainage); and

   b. 95 percent of cost of materials and equipment not incorporated in the Work (with the balance of 5 percent being retainage).

Based on EJCDC C-520 Suggested Form of Agreement Between Owner and Contractor for Construction Contract (Stipulated Price)
Prepared by National Society of Professional Engineers for EJCDC. All rights reserved.

2. Upon Substantial Completion, Owner shall pay an amount sufficient to increase total payments to Contractor to 99 percent of the Work completed (with the balance of 1 percent being retainage), less such amounts as Engineer shall determine in accordance with Paragraph 14.02.B.5 of the General and Supplementary Conditions, and Additional Supplementary Conditions, if any, and less the Engineer's estimate of the value of Work to be completed or corrected as shown on the tentative list of items to be completed or corrected (Punch List) attached to the certificate of Substantial Completion and subject to Paragraph 14.04 of the General and Supplementary Conditions, and Additional Supplementary Conditions, if any. However, retainage for items planted in the ground shall remain at 5 percent of the cost of such items until Final Payment per Massachusetts General Laws Chapter 30, Section 39G.

6.03 *Final Payment*

A. Upon final completion and acceptance of the Work in accordance with Paragraph 14.07 of the General and Supplementary Conditions, and Additional Supplementary Conditions, if any, Owner shall pay the remainder of the Contract Price as recommended by Engineer as provided in said Paragraph 14.07.

ARTICLE 7 – INTEREST

7.01 All moneys not paid when due as provided in Article 14 of the General and Supplementary Conditions, and Additional Supplementary Conditions, if any, shall bear interest at the rate three percentage points above the rediscount rate then charged by the Federal Reserve Bank of Boston per Massachusetts General Laws Chapter 30, Section 39G.

ARTICLE 8 – CONTRACTOR'S REPRESENTATIONS AND CERTIFICATIONS

8.01 In order to induce Owner to enter into this Agreement, Contractor makes the following representations:

A. Contractor has examined and carefully studied the Contract Documents and the other related data identified in the Bidding Documents.

B. Contractor has visited the Site and become familiar with and is satisfied as to the general, local, and Site conditions that may affect cost, progress, and performance of the Work.

C. Contractor is familiar with and is satisfied as to all federal, state, and local Laws and Regulations that may affect cost, progress, and performance of the Work.

Based on EJCDC C-520 Suggested Form of Agreement Between Owner and Contractor for Construction Contract (Stipulated Price)
Prepared by National Society of Professional Engineers for EJCDC. All rights reserved.

D. Contractor has carefully studied all: (1) reports of explorations and tests of subsurface conditions at or contiguous to the Site and all drawings of physical conditions relating to existing surface or subsurface structures at the Site (except Underground Facilities), if any, that have been identified in Paragraph SC-4.02 in Section 00 73 10 of the Additional Supplementary Conditions as containing reliable "technical data," and (2) reports and drawings of Hazardous Environmental Conditions, if any, at the Site that have been identified in Paragraph SC-4.06 in Section 00 73 10 of the Additional Supplementary Conditions as containing reliable "technical data."

E. Contractor has considered the information known to Contractor; information commonly known to contractors doing business in the locality of the Site; information and observations obtained from visits to the Site; the Contract Documents; and the Site-related reports and drawings identified in the Contract Documents, with respect to the effect of such information, observations, and documents on (1) the cost, progress, and performance of the Work; (2) the means, methods, techniques, sequences, and procedures of construction to be employed by Contractor, including any specific means, methods, techniques, sequences, and procedures of construction expressly required by the Contract Documents; and (3) Contractor's safety precautions and programs.

F. Based on the information and observations referred to in Paragraph 8.01.E above, Contractor does not consider that further examinations, investigations, explorations, tests, studies, or data are necessary for the performance of the Work at the Contract Price, within the Contract Times, and in accordance with the other terms and conditions of the Contract Documents.

G. Contractor is aware of the general nature of work to be performed by Owner and others at the Site that relates to the Work as indicated in the Contract Documents.

H. Contractor has given Engineer written notice of all conflicts, errors, ambiguities, or discrepancies that Contractor has discovered in the Contract Documents, and the written resolution thereof by Engineer is acceptable to Contractor.

I. The Contract Documents are generally sufficient to indicate and convey understanding of all terms and conditions for performance and furnishing of the Work.

8.02 The Contractor certifies, under the penalties of perjury, that:

A. Contractor has not engaged in corrupt, fraudulent, collusive, or coercive practices in competing for or in executing the Contract. For the purposes of this Paragraph:

1. "corrupt practice" means the offering, giving, receiving, or soliciting of anything of value likely to influence the action of a public official in the bidding process or in the Contract execution;

Based on EJCDC C-520 Suggested Form of Agreement Between Owner and Contractor for Construction Contract (Stipulated Price)
Prepared by National Society of Professional Engineers for EJCDC. All rights reserved.

2. "fraudulent practice" means an intentional misrepresentation of facts made (a) to influence the bidding process or the execution of the Contract to the detriment of Owner, (b) to establish Bid or Contract prices at artificial non-competitive levels, or (c) to deprive Owner of the benefits of free and open competition;

3. "collusive practice" means a scheme or arrangement between two or more Bidders, with or without the knowledge of Owner, a purpose of which is to establish Bid prices at artificial, non-competitive levels; and

4. "coercive practice" means harming or threatening to harm, directly or indirectly, persons or their property to influence their participation in the bidding process or affect the execution of the Contract.

B. Contractor has complied with all laws of the Commonwealth of Massachusetts relating to taxes, reporting of employees and contractors, and withholding and remitting of child support and, has provided for itself and each Subcontractor, a certificate of good standing from the Secretary of State with respect to all returns due and taxes and further, and certifies that, to the best of its knowledge and belief, certifies all state tax returns have been filed and all state taxes have been paid as required by Law pursuant to Massachusetts General Laws Chapter 62C, Section 49A;

C. If a foreign corporation, Contractor has provided for itself and each Subcontractor, a certificate of the state secretary stating that the corporation has complied with requirements of Massachusetts General Laws Chapter 156D, Part 15, Section 15.03 of subdivision A and the date of compliance, and further has filed all annual reports required by Section 16.22 of subdivision B of Part 16 of said Chapter 156D, pursuant to Massachusetts General Laws Chapter 30, Section 39L;

D. Contractor is able to furnish labor that can work in harmony with all other elements of labor employed or to be employed in the Work and further certifies that all employees to be employed at the Work Site will have successfully completed a course in construction safety and health approved by the United States Occupational Safety and Health Administration that is at least 10 hours in duration at the time the employee begins Work and shall furnish documentation of successful completion of said course with the first certified payroll report for each employee;

E. Contractor is not presently debarred from doing public construction work in the Commonwealth of Massachusetts under the provisions of Massachusetts General Laws Chapter 129, Section 129F, or any other applicable debarment provisions of any other chapter of the General Laws or any rule or regulations promulgated thereunder; and is not presently debarred, suspended, proposed for debarment, declared ineligible, or voluntarily excluded from covered transactions by any Federal department or agency;

Based on EJCDC C-520 Suggested Form of Agreement Between Owner and Contractor for Construction Contract (Stipulated Price)
Prepared by National Society of Professional Engineers for EJCDC. All rights reserved.

F. Pursuant to Massachusetts General Laws Chapter 30, Section 39R, Contractor has provided a statement by management on internal accounting controls, a statement prepared by an independent certified public accountant; and an audited financial statement for the most recent completed fiscal year; and

G. Contractor will comply with the specific affirmative action steps contained in Equal Employment Opportunity/Affirmative Action provisions of the Contract and shall incorporate the EEO/AA provisions of the Contract into all subcontracts and Purchase Orders so that such provisions will be binding upon each Subcontractor or Supplier.

ARTICLE 9 – CONTRACT DOCUMENTS

9.01 *Contents*

A. The Contract Documents consist of the following:

1. This Agreement

2. Items listed in Section 00 54 00

3. Forms listed in 00 60 00

4. Standard General Conditions and Supplementary Conditions in Section 00 72 05

5. Additional Supplementary Conditions listed in Section 00 73 05

6. General Requirements, Specifications and Drawings as listed in the table of contents of the Contract Documents

7. The following which may be delivered or issued on or after the Effective Date of the Agreement and are not attached hereto:

   a. Notice to Proceed

   b. Work Change Directives

   c. Change Orders

B. The documents listed in Paragraph 9.01.A are attached to this Agreement and made a part hereof.

C. There are no Contract Documents other than those listed above in this Article 9.

D. The Contract Documents may only be amended, modified, or supplemented as provided in Paragraph 3.04 of the Standard General and Supplementary Conditions, and Additional Supplementary Conditions, if any.

Based on EJCDC C-520 Suggested Form of Agreement Between Owner and Contractor for Construction Contract (Stipulated Price)
Prepared by National Society of Professional Engineers for EJCDC. All rights reserved.

ARTICLE 10 – MISCELLANEOUS

10.01 *Terms*

A. Terms used in this Agreement will have the meanings stated in the Standard General and Supplementary Conditions, and Additional Supplementary Conditions, if any.

10.02 *Assignment of Contract*

A. No assignment by a party hereto of any rights under or interests in the Contract will be binding on another party hereto without the written consent of the party sought to be bound; and, specifically but without limitation, moneys that may become due and moneys that are due may not be assigned without such consent (except to the extent that the effect of this restriction may be limited by law), and unless specifically stated to the contrary in any written consent to an assignment, no assignment will release or discharge the assignor from any duty or responsibility under the Contract Documents.

10.03 *Successors and Assigns*

A. Owner and Contractor each binds itself, its partners, successors, assigns, and legal representatives to the other party hereto, its partners, successors, assigns, and legal representatives in respect to all covenants, agreements, and obligations contained in the Contract Documents.

10.04 *Severability*

A. Any provision or part of the Contract Documents held to be void or unenforceable under any Law or Regulation shall be deemed stricken, and all remaining provisions shall continue to be valid and binding upon Owner and Contractor, who agree that the Contract Documents shall be reformed to replace such stricken provision or part thereof with a valid and enforceable provision that comes as close as possible to expressing the intention of the stricken provision.

Based on EJCDC C-520 Suggested Form of Agreement Between Owner and Contractor for Construction Contract (Stipulated Price)
Prepared by National Society of Professional Engineers for EJCDC. All rights reserved.

IN WITNESS WHEREOF, Owner and Contractor have signed this Agreement. Counterparts have been delivered to Owner and Contractor. All portions of the Contract Documents have been signed or have been identified by Owner and Contractor or on their behalf.

This Agreement will be effective on _____ (which is the Effective Date of the Agreement).

OWNER:
CITY OF QUINCY, MASSACHUSETTS

By: _____
Thomas P. Koch, Mayor

By:_____
Christopher Cassani, Executive Director of Parks & For

By:_____
Kathryn Hobin, Chief Procurement Officer

Attest: _____

Address for giving notices:

(If Owner is a corporation, attach evidence of authority to sign. is a public body, attach evidence of authority to sign and res other documents authorizing execution of this Agreement.)

CONTRACTOR:

By:
Title

License No.

Attest:
Title
Address for giving notices:

Agent for service of process:

(If Contractor is a corporation, a partnership, or a joint ventu evidence of authority to sign.)

Based on EJCDC C-520 Suggested Form of Agreement Between Owner and Contractor for Construction Contract (Stipulated Price)
Prepared by National Society of Professional Engineers for EJCDC. All rights reserved.

Approved as to Form by:

_____
James S. Timmins, Esq., City Solicitor

Date: _____

Pursuant to MGL c.44, s31C, I certify that an appropriation has been made in the total amount of the Agreement.

_____
Mark Cavanagh
Director of Municipal Finance

Date: _____

Based on EJCDC C-520 Suggested Form of Agreement Between Owner and Contractor for Construction Contract (Stipulated Price)
Prepared by National Society of Professional Engineers for EJCDC. All rights reserved.

SECTION 00 54 00

AGREEMENT FORM SUPPLEMENTS

The following items included in this Section are attached to and are incorporated into the Agreement and made a part thereof.

- **Items submitted with Bid:**
  - Certificate from the Secretary of State for foreign corporations
  - Certificate of good standing with respect to all returns due and taxes
  - Unit Prices Form (00 43 22)
  - Proposed Subcontractors Form (00 43 36)
  - Proposed Suppliers Form (00 43 37)
  - Information, Schedules and Data (00 43 40)
    - Proposed Project Schedule
    - Proposed Work Plan
  - Bidder's Qualifications(00 45 13)

- 00 61 13.13 Performance Bond
- 00 61 13.16 Payment Bond
- Insurance certificates

- **Certifications**
  - Subcontractor certificates of good standing from the Secretary of State with respect to all returns due and taxes
  - Subcontractor certification from the Secretary of State for foreign corporations
  - A statement by management on internal accounting controls
  - A statement prepared by an independent certified public accountant
  - An audited financial statement for the most recent completed fiscal year

This page intentionally left blank

Notice to Proceed (C-00 55 00)

Date: _____

Project:	
Owner:	Owner's Contract No.:
Contract:	Engineer's Project No.:
Contractor:	
Contractor's Address: *[send Certified Mail, Return Receipt Requested]*	

You are notified that the Contract Times under the above Contract will commence to run on_____. On or before that date, you are to start performing your obligations under the Contract Documents * for the following portion(s) of the Work:

Describe the limits of the Work covered

*A Notice to Proceed for the remaining Work will follow. *

In accordance with Article 4 of the Agreement, the date of Substantial Completion is_____, and the date of readiness for final payment is _____ [(or) the number of days to achieve Substantial Completion is _____, and the number of days to achieve readiness for final payment is _____].

Before you may start any Work at the Site, Paragraph 2.01.B of the Standard General and Supplementary Conditions, and additional Supplementary Conditions if any, provide that you and Owner must each deliver to the other (with copies to Engineer and other identified additional insureds and loss payees) certificates of insurance which each is required to purchase and maintain in accordance with the Contract Documents.

Also, before you may start any Work at the Site, you must:

_____ *[add other requirements]*.

	Owner Given by:
	Authorized Signature
	Title
	Date

Copy to Engineer

SECTION 00 60 00

PROJECT FORMS

The following forms are included in this Section and shall be used for the Project as specified in the General and Supplementary Conditions, Additional Supplementary Conditions if any, and the General Requirements. Completed and execution versions of these forms used during the Project shall be incorporated into the Agreement and made a part thereof.

Performance Bond Form (C-00 61 13.13)
Payment Bond Form (C-00 61 13.16)
Application for Payment Certificate Form (C-00 62 76)
Request for Interpretation/Information Form (C-00 63 15)
Field Order Form (C-00 63 36)
Work Change Directive Form (C-00 63 49)
Change Request Form (C- 00 63 60)
Change Order Form (C-00 06 63)
Notice of Substantial Completion Form (C-00 65 15)
Certificate of Substantial Completion Form (C-00 65 16)
Certificate of Completion Form (C-00 65 19)
Final Release and Waiver of Liens (C-00 65 19.15)

This page intentionally left blank

EJCDC
ENGINEERS JOINT CONTRACT DOCUMENTS COMMITTEE

PERFORMANCE BOND (Form C-0061113.13)

CONTRACTOR *(name and address)*:

SURETY *(name and address of principal place of business)*:

OWNER *(name and address)*:

CONSTRUCTION CONTRACT
Effective Date of the Agreement:
Amount:
Description *(name and location)*:

BOND
Bond Number:
Date *(not earlier than the Effective Date of the Agreement of the Construction Contract)*:
Amount:
Modifications to this Bond Form: ☐ None ☐ See Paragraph 16

Surety and Contractor, intending to be legally bound hereby, subject to the terms set forth below, do each cause this Performance Bond to be duly executed by an authorized officer, agent, or representative.

CONTRACTOR AS PRINCIPAL

_____ *(seal)*
Contractor's Name and Corporate Seal

By: _____
Signature

_____
Print Name

_____
Title

Attest:_____
Signature

_____
Title

SURETY

_____ *(seal)*
Surety's Name and Corporate Seal

By:_____
Signature *(attach power of attorney)*

_____
Print Name

_____
Title

Attest:_____
Signature

_____
Title

Notes: (1) Provide supplemental execution by any additional parties, such as joint venturers. (2) Any singular reference to Contractor, Surety, Owner, or other party shall be considered plural where applicable.

1. The Contractor and Surety, jointly and severally, bind themselves, their heirs, executors, administrators, successors, and assigns to the Owner for the performance of the Construction Contract, which is incorporated herein by reference.

2. If the Contractor performs the Construction Contract, the Surety and the Contractor shall have no obligation under this Bond, except when applicable to participate in a conference as provided in Paragraph 3.

3. If there is no Owner Default under the Construction Contract, the Surety's obligation under this Bond shall arise after:

3.1 The Owner first provides notice to the Contractor and the Surety that the Owner is considering declaring a Contractor Default. Such notice shall indicate whether the Owner is requesting a conference among the Owner, Contractor, and Surety to discuss the Contractor's performance. If the Owner does not request a conference, the Surety may, within five (5) business days after receipt of the Owner's notice, request such a conference. If the Surety timely requests a conference, the Owner shall attend. Unless the Owner agrees otherwise, any conference requested under this Paragraph 3.1 shall be held within ten (10) business days of the Surety's receipt of the Owner's notice. If the Owner, the Contractor, and the Surety agree, the Contractor shall be allowed a reasonable time to perform the Construction Contract, but such an agreement shall not waive the Owner's right, if any, subsequently to declare a Contractor Default;

3.2 The Owner declares a Contractor Default, terminates the Construction Contract and notifies the Surety; and

3.3 The Owner has agreed to pay the Balance of the Contract Price in accordance with the terms of the Construction Contract to the Surety or to a contractor selected to perform the Construction Contract.

4. Failure on the part of the Owner to comply with the notice requirement in Paragraph 3.1 shall not constitute a failure to comply with a condition precedent to the Surety's obligations, or release the Surety from its obligations, except to the extent the Surety demonstrates actual prejudice.

5. When the Owner has satisfied the conditions of Paragraph 3, the Surety shall promptly and at the Surety's expense take one of the following actions:

5.1 Arrange for the Contractor, with the consent of the Owner, to perform and complete the Construction Contract;

5.2 Undertake to perform and complete the Construction Contract itself, through its agents or independent contractors;

5.3 Obtain bids or negotiated proposals from qualified contractors acceptable to the Owner for a contract for performance and completion of the Construction Contract, arrange for a contract to be prepared for execution by the Owner and a contractor selected with the Owners concurrence, to be secured with performance and payment bonds executed by a qualified surety equivalent to the bonds issued on the Construction Contract, and pay to the Owner the amount of damages as described in Paragraph 7 in excess of the Balance of the Contract Price incurred by the Owner as a result of the Contractor Default; or

5.4 Waive its right to perform and complete, arrange for completion, or obtain a new contractor, and with reasonable promptness under the circumstances:

5.4.1 After investigation, determine the amount for which it may be liable to the Owner and, as soon as practicable after the amount is determined, make payment to the Owner; or

5.4.2 Deny liability in whole or in part and notify the Owner, citing the reasons for denial.

6. If the Surety does not proceed as provided in Paragraph 5 with reasonable promptness, the Surety shall be deemed to be in default on this Bond seven days after receipt of an additional written notice from the Owner to the Surety demanding that the Surety perform its obligations under this Bond, and the Owner shall be entitled to enforce any remedy available to the Owner. If the Surety proceeds as provided in Paragraph 5.4, and the Owner refuses the payment or the Surety has denied liability, in whole or in part, without further notice the Owner shall be entitled to enforce any remedy available to the Owner.

7. If the Surety elects to act under Paragraph 5.1, 5.2, or 5.3, then the responsibilities of the Surety to the Owner shall not be greater than those of the Contractor under the Construction Contract, and the responsibilities of the Owner to the Surety shall not be greater than those of the Owner under the Construction Contract. Subject to the commitment by the Owner to pay the Balance of the Contract Price, the Surety is obligated, without duplication for:

7.1 the responsibilities of the Contractor for correction of defective work and completion of the Construction Contract;

7.2 additional legal, design professional, and delay costs resulting from the Contractor's Default, and resulting from the actions or failure to act of the Surety under Paragraph 5; and

7.3 liquidated damages, or if no liquidated damages are specified in the Construction Contract, actual damages caused by delayed performance or non-performance of the Contractor.

8. If the Surety elects to act under Paragraph 5.1, 5.3, or 5.4, the Surety's liability is limited to the amount of this Bond.

9. The Surety shall not be liable to the Owner or others for obligations of the Contractor that are unrelated to the Construction Contract, and the Balance of the Contract Price shall not be reduced or set off on account of any such unrelated obligations. No right of action shall accrue on this Bond to any person or entity other than the Owner or its heirs, executors, administrators, successors, and assigns.

10. The Surety hereby waives notice of any change, including changes of time, to the Construction Contract or to related subcontracts, purchase orders, and other obligations.

11. Any proceeding, legal or equitable, under this Bond may be instituted in any court of competent jurisdiction in the location in which the work or part of the work is located and shall be instituted within two years after a declaration of Contractor Default or within

two years after the Contractor ceased working or within two years after the Surety refuses or fails to perform its obligations under this Bond, whichever occurs first. If the provisions of this paragraph are void or prohibited by law, the minimum periods of limitations available to sureties as a defense in the jurisdiction of the suit shall be applicable.

12. Notice to the Surety, the Owner, or the Contractor shall be mailed or delivered to the address shown on the page on which their signature appears.

13. When this Bond has been furnished to comply with a statutory or other legal requirement in the location where the construction was to be performed, any provision in this Bond conflicting with said statutory or legal requirement shall be deemed deleted herefrom and provisions conforming to such statutory or other legal requirement shall be deemed incorporated herein. When so furnished, the intent is that this Bond shall be construed as a statutory bond and not as a common law bond.

14. Definitions

14.1 Balance of the Contract Price: The total amount payable by the Owner to the Contractor under the Construction Contract after all proper adjustments have been made including allowance for the Contractor for any amounts received or to be received by the Owner in settlement of insurance or other claims for damages to which the Contractor is entitled, reduced by all valid and proper payments made to or on behalf of the Contractor under the Construction Contract.

14.2 Construction Contract: The agreement between the Owner and Contractor identified on the cover page, including all Contract Documents and changes made to the agreement and the Contract Documents.

14.3 Contractor Default: Failure of the Contractor, which has not been remedied or waived, to perform or otherwise to comply with a material term of the Construction Contract.

14.4 Owner Default: Failure of the Owner, which has not been remedied or waived, to pay the Contractor as required under the Construction Contract or to perform and complete or comply with the other material terms of the Construction Contract.

14.5 Contract Documents: All the documents that comprise the agreement between the Owner and Contractor.

15. If this Bond is issued for an agreement between a contractor and subcontractor, the term Contractor in this Bond shall be deemed to be Subcontractor and the term Owner shall be deemed to be Contractor.

16. Modifications to this Bond are as follows:

This page intentionally left blank

EJCDC
ENGINEERS JOINT CONTRACT DOCUMENTS COMMITTEE

PAYMENT BOND (Form C-0061113.16)

CONTRACTOR *(name and address)*:

SURETY *(name and address of principal place of business)*:

OWNER *(name and address)*:

CONSTRUCTION CONTRACT
Effective Date of the Agreement:
Amount:
Description *(name and location)*:

BOND
Bond Number:
Date *(not earlier than the Effective Date of the Agreement of the Construction Contract)*:
Amount:
Modifications to this Bond Form: ☐ None ☐ See Paragraph 18

Surety and Contractor, intending to be legally bound hereby, subject to the terms set forth below, do each cause this Payment Bond to be duly executed by an authorized officer, agent, or representative.

CONTRACTOR AS PRINCIPAL

_____ *(seal)*
Contractor's Name and Corporate Seal

By: _____
Signature

_____
Print Name

_____
Title

Attest: _____
Signature

_____
Title

SURETY

_____ *(seal)*
Surety's Name and Corporate Seal

By: _____
Signature *(attach power of attorney)*

_____
Print Name

_____
Title

Attest: _____
Signature

_____
Title

Notes: (1) Provide supplemental execution by any additional parties, such as joint venturers. (2) Any singular reference to Contractor, Surety, Owner, or other party shall be considered plural where applicable.

1. The Contractor and Surety, jointly and severally, bind themselves, their heirs, executors, administrators, successors, and assigns to the Owner to pay for labor, materials, and equipment furnished for use in the performance of the Construction Contract, which is incorporated herein by reference, subject to the following terms.

2. If the Contractor promptly makes payment of all sums due to Claimants, and defends, indemnifies, and holds harmless the Owner from claims, demands, liens, or suits by any person or entity seeking payment for labor, materials, or equipment furnished for use in the performance of the Construction Contract, then the Surety and the Contractor shall have no obligation under this Bond.

3. If there is no Owner Default under the Construction Contract, the Surety's obligation to the Owner under this Bond shall arise after the Owner has promptly notified the Contractor and the Surety (at the address described in Paragraph 13) of claims, demands, liens, or suits against the Owner or the Owner's property by any person or entity seeking payment for labor, materials, or equipment furnished for use in the performance of the Construction Contract, and tendered defense of such claims, demands, liens, or suits to the Contractor and the Surety.

4. When the Owner has satisfied the conditions in Paragraph 3, the Surety shall promptly and at the Surety's expense defend, indemnify, and hold harmless the Owner against a duly tendered claim, demand, lien, or suit.

5. The Surety's obligations to a Claimant under this Bond shall arise after the following:

   5.1 Claimants who do not have a direct contract with the Contractor,

      5.1.1 have furnished a written notice of non-payment to the Contractor, stating with substantial accuracy the amount claimed and the name of the party to whom the materials were, or equipment was, furnished or supplied or for whom the labor was done or performed, within ninety (90) days after having last performed labor or last furnished materials or equipment included in the Claim; and

      5.1.2 have sent a Claim to the Surety (at the address described in Paragraph 13).

   5.2 Claimants who are employed by or have a direct contract with the Contractor have sent a Claim to the Surety (at the address described in Paragraph 13).

6. If a notice of non-payment required by Paragraph 5.1.1 is given by the Owner to the Contractor, that is sufficient to satisfy a Claimant's obligation to furnish a written notice of non-payment under Paragraph 5.1.1.

7. When a Claimant has satisfied the conditions of Paragraph 5.1 or 5.2, whichever is applicable, the Surety shall promptly and at the Surety's expense take the following actions:

   7.1 Send an answer to the Claimant, with a copy to the Owner, within sixty (60) days after receipt of the Claim, stating the amounts that are undisputed and the basis for challenging any amounts that are disputed; and

   7.2 Pay or arrange for payment of any undisputed amounts.

   7.3 The Surety's failure to discharge its obligations under Paragraph 7.1 or 7.2 shall not be deemed to constitute a waiver of defenses the Surety or Contractor may have or acquire as to a Claim, except as to undisputed amounts for which the Surety and Claimant have reached agreement. If, however, the Surety fails to discharge its obligations under Paragraph 7.1 or 7.2, the Surety shall indemnify the Claimant for the reasonable attorney's fees the Claimant incurs thereafter to recover any sums found to be due and owing to the Claimant.

8. The Surety's total obligation shall not exceed the amount of this Bond, plus the amount of reasonable attorney's fees provided under Paragraph 7.3, and the amount of this Bond shall be credited for any payments made in good faith by the Surety.

9. Amounts owed by the Owner to the Contractor under the Construction Contract shall be used for the performance of the Construction Contract and to satisfy claims, if any, under any construction performance bond. By the Contractor furnishing and the Owner accepting this Bond, they agree that all funds earned by the Contractor in the performance of the Construction Contract are dedicated to satisfy obligations of the Contractor and Surety under this Bond, subject to the Owner's priority to use the funds for the completion of the work.

10. The Surety shall not be liable to the Owner, Claimants, or others for obligations of the Contractor that are unrelated to the Construction Contract. The Owner shall not be liable for the payment of any costs or expenses of any Claimant under this Bond, and shall have under this Bond no obligation to make payments to or give notice on behalf of Claimants, or otherwise have any obligations to Claimants under this Bond.

11. The Surety hereby waives notice of any change, including changes of time, to the Construction Contract or to related subcontracts, purchase orders, and other obligations.

12. No suit or action shall be commenced by a Claimant under this Bond other than in a court of competent jurisdiction in the state in which the project that is the subject of the Construction Contract is located or after the expiration of one year from the date (1) on which the Claimant sent a Claim to the Surety pursuant to Paragraph 5.1.2 or 5.2, or

(2) on which the last labor or service was performed by anyone or the last materials or equipment were furnished by anyone under the Construction Contract, whichever of (1) or (2) first occurs. If the provisions of this paragraph are void or prohibited by law, the minimum period of limitation available to sureties as a defense in the jurisdiction of the suit shall be applicable.

13. Notice and Claims to the Surety, the Owner, or the Contractor shall be mailed or delivered to the address shown on the page on which their signature appears. Actual receipt of notice or Claims, however accomplished, shall be sufficient compliance as of the date received.

14. When this Bond has been furnished to comply with a statutory or other legal requirement in the location where the construction was to be performed, any provision in this Bond conflicting with said statutory or legal requirement shall be deemed deleted herefrom and provisions conforming to such statutory or other legal requirement shall be deemed incorporated herein. When so furnished, the intent is that this Bond shall be construed as a statutory bond and not as a common law bond.

15. Upon requests by any person or entity appearing to be a potential beneficiary of this Bond, the Contractor and Owner shall promptly furnish a copy of this Bond or shall permit a copy to be made.

16. **Definitions**

16.1 **Claim:** A written statement by the Claimant including at a minimum:

1. The name of the Claimant;
2. The name of the person for whom the labor was done, or materials or equipment furnished;
3. A copy of the agreement or purchase order pursuant to which labor, materials, or equipment was furnished for use in the performance of the Construction Contract;
4. A brief description of the labor, materials, or equipment furnished;
5. The date on which the Claimant last performed labor or last furnished materials or equipment for use in the performance of the Construction Contract;
6. The total amount earned by the Claimant for labor, materials, or equipment furnished as of the date of the Claim;
7. The total amount of previous payments received by the Claimant; and
8. The total amount due and unpaid to the Claimant for labor, materials, or equipment furnished as of the date of the Claim.

16.2 **Claimant:** An individual or entity having a direct contract with the Contractor or with a subcontractor of the Contractor to furnish labor, materials, or equipment for use in the performance of the Construction Contract. The term Claimant also includes any individual or entity that has rightfully asserted a claim under an applicable mechanic's lien or similar statute against the real property upon which the Project is located. The intent of this Bond shall be to include without limitation in the terms of "labor, materials, or equipment" that part of the water, gas, power, light, heat, oil, gasoline, telephone service, or rental equipment used in the Construction Contract, architectural and engineering services required for performance of the work of the Contractor and the Contractor's subcontractors, and all other items for which a mechanic's lien may be asserted in the jurisdiction where the labor, materials, or equipment were furnished.

16.3 **Construction Contract:** The agreement between the Owner and Contractor identified on the cover page, including all Contract Documents and all changes made to the agreement and the Contract Documents.

16.4 **Owner Default**: Failure of the Owner, which has not been remedied or waived, to pay the Contractor as required under the Construction Contract or to perform and complete or comply with the other material terms of the Construction Contract.

16.5 **Contract Documents:** All the documents that comprise the agreement between the Owner and Contractor.

17. If this Bond is issued for an agreement between a contractor and subcontractor, the term Contractor in this Bond shall be deemed to be Subcontractor and the term Owner shall be deemed to be Contractor.

18. Modifications to this Bond are as follows:

This page intentionally left blank

EJCDC
ENGINEERS JOINT CONTRACT DOCUMENTS COMMITTEE

FORM C-006276

Contractor's Application for Payment No. _____

	Application Period:	Application Date:
To (Owner):	From (Contractor):	Via (Engineer):
Project:	Contract:	
Owner's Contract No.:	Contractor's Project No.:	Engineer's Project No.:

Application For Payment

Change Order Summary

Approved Change Orders		
Number	Additions	Deductions
TOTALS		
NET CHANGE BY CHANGE ORDERS		

1. ORIGINAL CONTRACT PRICE..... $ _____

2. Net change by Change Orders..... $ _____

3. Current Contract Price (Line 1 ± 2)..... $ _____

4. TOTAL COMPLETED AND STORED TO DATE (Column F on Progress Estimate)..... $ _____

5. RETAINAGE:

a. X _____ **Work Completed**..... $ _____

b. X _____ **Stored Material**..... $ _____

c. Total Retainage (Line 5a + Line 5b)..... $ _____

6. AMOUNT ELIGIBLE TO DATE (Line 4 - Line 5c)..... $ _____

7. LESS PREVIOUS PAYMENTS (Line 6 from prior Application)..... $ _____

8. AMOUNT DUE THIS APPLICATION..... $ _____

9. BALANCE TO FINISH, PLUS RETAINAGE (Column G on Progress Estimate + Line 5 above)..... $ _____

Contractor's Certification

The undersigned Contractor certifies that to the best of its knowledge: (1) all previous progress payments received from Owner on account of Work done under the Contract have been applied on account to discharge Contractor's legitimate obligations incurred in connection with Work covered by prior Applications for Payment; (2) title of all Work, materials and equipment incorporated in said Work or otherwise listed in or covered by this Application for Payment will pass to Owner at time of payment free and clear of all Liens, security interests and encumbrances (except such as are covered by a Bond acceptable to Owner indemnifying Owner against any such Liens, security interest or encumbrances); and (3) all Work covered by this Application for Payment is in accordance with the Contract Documents and is not defective.

By:	Date:

Payment of: $ _____
(Line 8 or other - attach explanation of the other amount)

is recommended by: _____ _____
(Engineer) (Date)

Payment of: $ _____
(Line 8 or other - attach explanation of the other amount)

is approved by: _____ _____
(Owner) (Date)

Approved by: _____ _____
Funding Agency (if applicable) (Date)

© 2010 National Society of Professional Engineers for EJCDC. All rights reserved.

This page intentionally left blank

Progress Estimate - Lump Sum Work

FORM C-006276

Contractor's Application

For (Contract):	Application Number:
Application Period:	Application Date:

			Work Completed		E	F		G
A		B	C	D				
Specification Section No.	Description	Scheduled Value ($)	From Previous Application (C+D)	This Period	Materials Presently Stored (not in C or D)	Total Completed and Stored to Date (C + D + E)	% (F / B)	Balance to Finish (B - F)
	Totals							

© 2010 National Society of Professional Engineers for EJCDC. All rights reserved.

This page intentionally left blank

Progress Estimate - Unit Price Work

FORM C-006276

Contractor's Application

For (Contract):	Application Number:
Application Period:	Application Date:

A				B	C	D	E	F		
Item		Bid Item Quantity	Unit Price	Bid Item Value ($)	Estimated Quantity Installed	Value of Work Installed to Date	Materials Presently Stored (not in C)	Total Completed and Stored to Date (D + E)	% (F / B)	Balance to Finish (B - F)
Bid Item No.	Description									
	Totals									

© 2010 National Society of Professional Engineers for EJCDC. All rights reserved.

This page intentionally left blank

Stored Material Summary FORM C-006276

Contractor's Application

For (Contract):	Application Number:
Application Period:	Application Date:

A		B	C		D		E		F		G
					Stored Previously				Incorporated in Work		
Bid Item No.	Supplier Invoice No.	Submittal No. (with Specification Section No.)	Storage Location	Description of Materials or Equpment Stored	Date Placed into Storage (Month/Year)	Amount ($)	Amount Stored this Month ($)	Subtotal Amount Completed and Stored to Date (D + E)	Date (Month/ Year)	Amount ($)	Materials Remaining in Storage ($) (D + E - F)

This page intentionally left blank

REQUEST FOR INTERPRETATION/INFORMATION (Form C-006313)

RFI #: _____ ☐ **Attachment**

To: _____ From: _____

Attn: _____ Issue Date: _____

Project: _____ Required Reply Date: _____

DISTRIBUTION:

Contractor	Owner	Engineer
☐ _____	☐ _____	☐ _____
☐ _____	☐ _____	☐ _____
☐ _____	☐ _____	☐ _____

REFERENCES:

- Specifications: _____ Section: _____ Page/Paragraph: _____
- Drawings: _____ Issue Date: _____ Detail/Sections: _____
- Work Area: _____ Grid/Level: _____

RFI DESCRIPTION:

From: _____ Tel No: _____ Fax: No: _____

Initial: _____ E-mail: _____

RFI REPLY:

Possible Cost Effect Yes: ☐ No: ☐ **Possible Schedule Effect** Yes: ☐ No: ☐

From: _____ Reply Date: _____ xc: _____

Initial: _____ _____

Based on: CASE Form B-1999

This page intentionally left blank

Field Order (C-006336)

No. _____

Date of Issuance: _____ Effective Date: _____

Project:	Owner:	Owner's Contract No.:
Contract:		Date of Contract:
Contractor:		Engineer's Project No.:

Attention:
You are hereby directed to promptly execute this Field Order issued in accordance with General Conditions Paragraph 9.04.A, for minor changes in the Work without changes in Contract Price or Contract Times. If you consider that a change in Contract Price or Contract Times is required, please notify the Engineer immediately and before proceeding with this Work.

Reference: _____ _____
(Specification Section(s)) (Drawing(s) / Detail(s))

Description:

Attachments:

	Engineer:

Receipt Acknowledged by Contractor:	Date:

Copy to Owner

This page intentionally left blank

Work Change Directive (Form C-006349)

No. _____

Date of Issuance: _____ Effective Date: _____

Project:	Owner:	Owner's Contract No.:
Contract:		Date of Contract:
Contractor:		Engineer's Project No.:

Contractor is directed to proceed promptly with the following change(s):

Item No.	Description

Attachments (list documents supporting change):

_____

_____

Purpose for Work Change Directive:

Authorization for Work described herein to proceed on the basis of Cost of the Work due to:

- ☐ Nonagreement on pricing of proposed change.
- ☐ Necessity to expedite Work described herein prior to agreeing to changes on Contract Price and Contract Time.

Estimated change in Contract Price and Contract Times:

Contract Price $_____ (increase/decrease) Contract Time _____ (increase/decrease) days

Recommended for Approval by Engineer:	Date
Authorized for Owner by:	Date
Received for Contractor by:	Date
Received by Funding Agency (if applicable):	Date:

This page intentionally left blank

CHANGE REQUEST (FORM C-006360)
(Design Changes/Deviations/Substitutions)

CR NO.
DATE

Project:

Request Initiated by:
- ☐ Contractor
- ☐ Owner
- ☐ Engineer

Impact to Contract Price expected ☐
Impact to Contract Time expected ☐
Change Orders will be processed separately

Request submitted as (format):

Description of Change (☐ <u>documentation attached)</u>

Reason for Change

Response: ☐ This constitutes a Written Amendment to the Agreement.

Review of the proposed change/deviation/substitution by Engineer is for general compatibility with the design concept of the Project. This review does not extend to means, methods, sequences, or procedures of construction or to issues of safety incident thereto. This review shall not relieve the Contractor from responsibility for full compliance with the requirements specified and to determine and verify the information contained therein.

Recommended By Engineer for Acceptance (subject to above comments if any) ☐ recommended for processing and approval under a separate Change Order NAME: *Signature* *Date*	☐ Approved by Owner (no schedule or cost impact) ☐ Acknowledged by Owner – to be processed and approved under a separate Change Order NAME: *Signature* *Date*
Approved by Contractor ☐ Change Order to be requested NAME: *Signature* *Date*	

This page intentionally left blank

Change Order (Form C-006363)

No. _____

Date of Issuance: _____ Effective Date: _____

Project:	Owner:	Owner's Contract No.:
Contract:		Date of Contract:
Contractor:		Engineer's Project No.:

The Contract Documents are modified as follows upon execution of this Change Order:

Description:

Attachments (list documents supporting change):

CHANGE IN CONTRACT PRICE:	CHANGE IN CONTRACT TIMES:
Original Contract Price: $_____	Original Contract Times: ☐ Working days ☐ Calendar days Substantial completion (days or date): _____ Ready for final payment (days or date): _____
[Increase] [Decrease] from previously approved Change Orders No. _____ to No. _____: $_____	[Increase] [Decrease] from previously approved Change Orders No. _____ to No. _____: Substantial completion (days): _____ Ready for final payment (days): _____
Contract Price prior to this Change Order: $_____	Contract Times prior to this Change Order: Substantial completion (days or date): _____ Ready for final payment (days or date): _____
[Increase] [Decrease] of this Change Order: $_____	[Increase] [Decrease] of this Change Order: Substantial completion (days or date): _____ Ready for final payment (days or date): _____
Contract Price incorporating this Change Order: $_____	Contract Times with all approved Change Orders: Substantial completion (days or date): _____ Ready for final payment (days or date): _____

RECOMMENDED:	ACCEPTED:	ACCEPTED:
By: _____	By: _____	By: _____
Engineer (Authorized Signature)	Owner (Authorized Signature)	Contractor (Authorized Signature)
Date: _____	Date: _____	Date: _____

Pursuant to MGL c.44, s31C, I certify that an appropriation has been made in the total amount of the Change Order

_____ Owner's Auditor/Accountant (Name)

Date: _____

Change Order

Instructions

A. GENERAL INFORMATION

This document was developed to provide a uniform format for handling contract changes that affect Contract Price or Contract Times. Changes that have been initiated by a Work Change Directive must be incorporated into a subsequent Change Order if they affect Price or Times.

Changes that affect Contract Price or Contract Times should be promptly covered by a Change Order. The practice of accumulating Change Orders to reduce the administrative burden may lead to unnecessary disputes.

If Milestones have been listed in the Agreement, any effect of a Change Order thereon should be addressed.

For supplemental instructions and minor changes not involving a change in the Contract Price or Contract Times, a Field Order should be used.

B. COMPLETING THE CHANGE ORDER FORM

Engineer normally initiates the form, including a description of the changes involved and attachments based upon documents and proposals submitted by Contractor, or requests from Owner, or both.

Once Engineer has completed and signed the form, all copies should be sent to Owner or Contractor for approval, depending on whether the Change Order is a true order to the Contractor or the formalization of a negotiated agreement for a previously performed change. After approval by one contracting party, all copies should be sent to the other party for approval. Engineer should make distribution of executed copies after approval by both parties.

If a change only applies to price or to times, cross out the part of the tabulation that does not apply.

FORM 006363A

CITY OF QUINCY, MASSACHUSETTS
Department of Public Works

City of Quincy
DPW

Thomas P. Koch
Mayor
Daniel G. Raymondi
Commissioner

CHANGE ORDER/AMENDMENT NO.

Made in Quintuplicate this day _____between the City of Quincy, Massachusetts, a Municipal Corporation, within the County of Norfolk, Party of the First Part and:

Insert Name
Insert Address

Party of the Second Part.

WITNESSETH: That for and in consideration of the following mutual covenants contained herein the parties Agree to amend Contract [ ] dated [ ] between the same parties as follows:

ARTICLE I: In Article I, we are INCREASING/ DECREASING by $_____ amount.

Because: (insert Justification).

ARTICLE II: In Article II, of the Contract, for

Between the same parties, strike out the words and figures:

(Insert figures)
(Insert words)

and substitute the words and figures:

(Insert figures)

(Insert words)

CITY OF QUINCY

_____
MAYOR

Sufficient Funds are available to cover the contract in the account to be charged.

_____
CITY SOLICITOR

_____
DIRECTOR OF MUNICIPAL FINANCE

_____
PURCHASING AGENT

_____
VENDOR SIGNATURE

DEPT.:_____

P.O. # : _____

_____
DIRECTOR OF POLICY

CODE: _____

PROJECT NAME:

CONTRACT NUMBER:

CHANGE ORDER NUMBER:
ORIGINAL CONTRACT AMOUNT: $

PREVIOUS CHANGE ORDERS (#1 & #2): $

CURRENT CONTRACT AMOUNT: $

CHANGE IN CONTRACT PRICE (this change order): $

TOTAL ADJUSTED CONTRACT PRICE: $
(include all change orders):

Reason for Change Order:

(1) Additional Work _____ (3) Change in Bid Quantities ____ _____

(2) Field Change ____ _____ (4) Change in Schedule ____ _____

(5) Other: _____

(a) Time to complete the work is extended by _____ calendar days.

(b) Extended completion date is _____

Reason & Description of Change:

Supporting Documents (list or attached, as necessary):

This Change Order has been requested by: ____ _____ CONTRACTOR ___ CITY

This Change Order has been reviewed by:_____ _____
(COMMISSIONER OF PUBLIC WORKS) (Date)

Notice of Substantial Completion (C-006515)

Project:	Owner:	Owner's Contract No.:
Contract:		Date of Contract:
Contractor:		

This Notice of Substantial Completion applies to:

☐ The following Systems, Equipment or specified portions

☐ : All Work under the Contract Documents

:

Date of Substantial Completion for above

The following documents are attached to and made part of this Notice.

This Certificate does not constitute an acceptance of Work not in accordance with the Contract Documents nor is it a release of Contractor's obligation to complete the Work in accordance with the Contract Documents.

Accepted by Contractor — Date

Accepted by Owner — Date

This page intentionally left blank

Certificate of Substantial Completion (Form C-006516)

Project:	
Owner:	Owner's Contract No.:
Contract:	Engineer's Project No.:

This [tentative] [definitive] Certificate of Substantial Completion applies to:

☐ All Work under the Contract Documents: ☐ The following specified portions of the Work:

_____

_____

_____

_____

_____
Date of Substantial Completion

The Work to which this Certificate applies has been inspected by authorized representatives of Owner, Contractor, and Engineer, and found to be substantially complete. The Date of Substantial Completion of the Project or portion thereof designated above is hereby declared and is also the date of commencement of applicable warranties required by the Contract Documents, except as stated below.

A [tentative] [definitive] list of items to be completed or corrected is attached hereto. This list may not be all-inclusive, and the failure to include any items on such list does not alter the responsibility of the Contractor to complete all Work in accordance with the Contract Documents.

The responsibilities between Owner and Contractor for security, operation, safety, maintenance, heat, utilities, insurance and warranties shall be as provided in the Contract Documents except as amended as follows:

☐ Amended Responsibilities ☐ Not Amended

Owner's Amended Responsibilities:

_____

_____

_____

Contractor's Amended Responsibilities:

_____

_____

_____

_____

The following documents are attached to and made part of this Certificate:

_____

_____

_____

This Certificate does not constitute an acceptance of Work not in accordance with the Contract Documents nor is it a release of Contractor's obligation to complete the Work in accordance with the Contract Documents.

Executed by Engineer	Date
Accepted by Contractor	Date
Accepted by Owner	Date

Certificate of Completion (Form C-006519)

Project:	Owner:	Owner's Contract No.:
Contract:		Date of Contract:
Contractor:		

This Certificate of Completion applies to:

☐ All Work under the Contract Documents: ☐ The following specified portions:

_____

_____

_____

_____

_____
Date of final Completion

The Work to which this Certificate applies has been inspected by authorized representatives of Owner and Contractor, Contractor has completed all corrections to the satisfaction of Owner, delivered all required documentation, and the Project, or portion designated above, is found to be complete. The Date of Completion of the Project or portion thereof designated above is hereby declared.

Contractor may make application for final payment.

The following documents are attached to and made part of this Certificate:

Final Application for Payment

This Certificate does not constitute a release of Contractor's obligation to complete the Work in accordance with the Contract Documents.

Only the **making and acceptance of final payment** will constitute:

1. A waiver of all claims by Owner against Contractor, except claims arising from any unsettled liens, from Defective Construction appearing after final inspection; from failure to comply with the Contract Documents or the terms of any special guarantees specified therein, or from Contractor's continuing obligations under the Contract Documents; and
2. A waiver of all claims by Contractor against Owner other than those previously timely made in writing and still unsettled.

_____ _____
Accepted by Contractor Date

_____ _____
Accepted by Owner Date

This page intentionally left blank

Final Release and Waiver of Liens (C-00 65 19.15)

Date: _____

Project:	
Owner:	Owner's Contract No.:
Contract:	Engineer's Project No.:
Contractor:	
Contractor's Address: [send Certified Mail, Return Receipt Requested]	

The undersigned Contractor certifies that all charges for labor, material, equipment and services in connection with the Contract have been paid in full, that there remains no charge by any Subcontractor or Supplier in connection with this Contract to date for which a lien could be filed arising out of or relating to said Contract, and all payment obligations have been fully discharged.

In connection with this Final Release and Waiver of Lien, the undersigned Contractor deposes and says that the total amount of the Contract, including change orders is $_____, and that all waivers are true, correct, and genuine and delivered unconditionally and that there is no claim either legal or equitable to defeat the validity of said waivers. The undersigned Contractor further states that there are no other contracts for said Work outstanding, and that there is nothing due or to become due to any person or entity for labor, material, equipment, or services, or other work of any kind done or to be done upon or in connection with said Work.

In consideration of Final Payment and upon receipt of that amount, the undersigned Contractor does hereby release and waive any and all liens, claims or rights of liens on or against the Project, security interests, or encumbrances on account of labor, materials, equipment, and services furnished by or through the undersigned Contractor and used or intended for use in said Project, subject to any rights the undersigned Contractor may have under the statutes of [STATE], except for except those listed below by obligee, nature and amount of obligation and covered by appropriate Bond or Bonds, as listed beside each obligation and attached to and made a part of this certification.

Obligee	**Obligation**	**Bond**

The undersigned Contractor further declares and agrees that in the event of the filing of any lien or other claim against the Owner or the property on which the Project is located, which lien or claim is covered in whole or substantially by the above certification, release and waiver, that the undersigned Contractor will protect, indemnify and hold harmless the Owner, its sureties or successors, and defend any suit or action and reimburse same for any expense incurred in connection with such defense or otherwise in obtaining the removal or release of any such lien or other form of claim or action arising out of the Contract and covered, as above stated, by this instrument.

_____
Contractor

_____
Authorized Signature

_____
Title

_____
Date

Notary Acknowledgement:

County of _____

State of _____

On this _____ day of _____, _____, before me, the undersigned Notary Public,
Day *Month* *Year*
personally appeared_____ , proved to me through satisfactory
Name of Signer
evidence of identity, which was _____, to be the person whose name is
Description of Evidence of Identity
signed above, and acknowledged to me that he/she signed it voluntarily for its stated purpose on behalf of said Contractor and that all of the statements contained therein are true, correct and complete.

NOTARY SEAL:

Signature of Notary Public_____

Name of Notary Public_____

My Commission Expires_____

This document has important legal consequences; consultation with an attorney is encouraged with respect to its use or modification. This document should be adapted to the particular circumstances of the contemplated Project and the controlling Laws and Regulations.

SECTION 00 72 05
STANDARD GENERAL CONDITIONS OF THE CONSTRUCTION CONTRACT

Prepared by

ENGINEERS JOINT CONTRACT DOCUMENTS COMMITTEE

and

Issued and Published Jointly by

AMERICAN COUNCIL OF ENGINEERING COMPANIES

ASSOCIATED GENERAL CONTRACTORS OF AMERICA

AMERICAN SOCIETY OF CIVIL ENGINEERS

PROFESSIONAL ENGINEERS IN PRIVATE PRACTICE
A Practice Division of the
NATIONAL SOCIETY OF PROFESSIONAL ENGINEERS

Endorsed by

CONSTRUCTION SPECIFICATIONS INSTITUTE

WITH STANDARD SUPPLEMENTARY CONDITIONS

prepared by Woodard & Curran on behalf of and as approved by Owner
(highlighted within the text of this Section)

Copyright © 2007 National Society of Professional Engineers for EJCDC. All rights reserved.

These General Conditions have been prepared for use with the Suggested Forms of Agreement Between Owner and Contractor (EJCDC C-520 or C-525, 2007 Editions). Their provisions are interrelated and a change in one may necessitate a change in the other. Comments concerning their usage are contained in the Narrative Guide to the EJCDC Construction Documents (EJCDC C-001, 2007 Edition). For guidance in the preparation of Supplementary Conditions, see Guide to the Preparation of Supplementary Conditions (EJCDC C-800, 2007 Edition).

Copyright © 2007 National Society of Professional Engineers
1420 King Street, Alexandria, VA 22314-2794
(703) 684-2882
www.nspe.org

American Council of Engineering Companies
1015 15th Street N.W., Washington, DC 20005
(202) 347-7474
www.acec.org

American Society of Civil Engineers
1801 Alexander Bell Drive, Reston, VA 20191-4400
(800) 548-2723
www.asce.org

Associated General Contractors of America
2300 Wilson Boulevard, Suite 400, Arlington, VA 22201-3308
(703) 548-3118
www.agc.org

The copyright for this EJCDC document is owned jointly by the four
EJCDC sponsoring organizations and held in trust for their benefit by NSPE.

Copyright © 2007 National Society of Professional Engineers for EJCDC. All rights reserved.

SECTION 00 72 05
STANDARD GENERAL CONDITIONS OF THE CONSTRUCTION CONTRACT

TABLE OF CONTENTS

Page

Article 1 – Definitions and Terminology 1
1.01 Defined Terms 1
1.02 Terminology 5

Article 2 – Preliminary Matters 7
2.01 Delivery of Bonds and Evidence of Insurance 7
2.02 Copies of Documents 7
2.03 Commencement of Contract Times; Notice to Proceed 7
2.04 Starting the Work 7
2.05 Before Starting Construction 8
2.06 Preconstruction Conference; Designation of Authorized Representatives 8
2.07 Initial Acceptance of Schedules 8

Article 3 – Contract Documents: Intent, Amending, Reuse 9
3.01 Intent 9
3.02 Reference Standards 9
3.03 Reporting and Resolving Discrepancies 10
3.04 Amending and Supplementing Contract Documents 11
3.05 Reuse of Documents 11
3.06 Electronic Data 11

Article 4 – Availability of Lands; Subsurface and Physical Conditions; Hazardous Environmental Conditions; Reference Points 12
4.01 Availability of Lands 12
4.02 Subsurface and Physical Conditions 12
4.03 Differing Subsurface or Physical Conditions 13
4.04 Underground Facilities 14
4.05 Reference Points 15
4.06 Hazardous Environmental Condition at Site 15

Article 5 – Bonds and Insurance 17
5.01 Performance, Payment, and Other Bonds 17
5.02 Licensed Sureties and Insurers 18
5.03 Certificates of Insurance 18
5.04 Contractor's Insurance 18
5.05 Owner's Liability Insurance 21
5.06 Property Insurance 21

Copyright © 2007 National Society of Professional Engineers for EJCDC. All rights reserved.

5.07 Waiver of Rights 22
5.08 Receipt and Application of Insurance Proceeds 23
5.09 Acceptance of Bonds and Insurance; Option to Replace 23
5.10 Partial Utilization, Acknowledgment of Property Insurer 23

Article 6 – Contractor's Responsibilities 24
6.01 Supervision and Superintendence 24
6.02 Labor; Working Hours 24
6.03 Services, Materials, and Equipment 24
6.04 Progress Schedule 25
6.05 Substitutes and "Or-Equals" 25
6.06 Concerning Subcontractors, Suppliers, and Others 28
6.07 Patent Fees and Royalties 29
6.08 Permits 30
6.09 Laws and Regulations 30
6.10 Taxes 31
6.11 Use of Site and Other Areas 31
6.12 Record Documents 32
6.13 Safety and Protection 32
6.14 Safety Representative 33
6.15 Hazard Communication Programs 33
6.16 Emergencies 33
6.17 Shop Drawings and Samples 33
6.18 Continuing the Work 35
6.19 Contractor's General Warranty and Guarantee 35
6.20 Indemnification 37
6.21 Delegation of Professional Design Services 38

Article 7 – Other Work at the Site 39
7.01 Related Work at Site 39
7.02 Coordination 39
7.03 Legal Relationships 40

Article 8 – Owner's Responsibilities 40
8.01 Communications to Contractor 40
8.02 Replacement of Engineer 40
8.03 Furnish Data 40
8.04 Pay When Due 40
8.05 Lands and Easements; Reports and Tests 40
8.06 Insurance 41
8.07 Change Orders 41
8.08 Inspections, Tests, and Approvals 41
8.09 Limitations on Owner's Responsibilities 41
8.10 Undisclosed Hazardous Environmental Condition 41
8.11 Evidence of Financial Arrangements 41
8.12 Compliance with Safety Program 41

Copyright © 2007 National Society of Professional Engineers for EJCDC. All rights reserved.

Article 9 – Engineer's Status During Construction 41
9.01 Owner's Representative 41
9.02 Visits to Site 42
9.03 Project Representative 42
9.04 Authorized Variations in Work 45
9.05 Rejecting Defective Work 45
9.06 Shop Drawings, Change Orders and Payments 46
9.07 Determinations for Unit Price Work 46
9.08 Decisions on Requirements of Contract Documents and Acceptability of Work 46
9.09 Limitations on Engineer's Authority and Responsibilities 46
9.10 Compliance with Safety Program 47

Article 10 – Changes in the Work; Claims 47
10.01 Authorized Changes in the Work 47
10.02 Unauthorized Changes in the Work 48
10.03 Execution of Change Orders 48
10.04 Notification to Surety 48
10.05 Claims 48

Article 11 – Cost of the Work; Allowances; Unit Price Work 50
11.01 Cost of the Work 50
11.02 Allowances 52
11.03 Unit Price Work 53

Article 12 – Change of Contract Price; Change of Contract Times 54
12.01 Change of Contract Price 54
12.02 Change of Contract Times 55
12.03 Delays 55

Article 13 – Tests and Inspections; Correction, Removal or Acceptance of Defective Work 56
13.01 Notice of Defects 56
13.02 Access to Work 56
13.03 Tests and Inspections 56
13.04 Uncovering Work 57
13.05 Owner May Stop the Work 57
13.06 Correction or Removal of Defective Work 58
13.07 Correction Period 58
13.08 Acceptance of Defective Work 59
13.09 Owner May Correct Defective Work 59

Article 14 – Payments to Contractor and Completion 60
14.01 Schedule of Values 60
14.02 Progress Payments 60
14.03 Contractor's Warranty of Title 63
14.04 Substantial Completion 63
14.05 Partial Utilization 64
14.06 Final Inspection 65

Copyright © 2007 National Society of Professional Engineers for EJCDC. All rights reserved.
with Standard Supplementary Conditions prepared by Woodard & Curran on behalf of and are as approved by Owner

14.07 Final Payment 65
14.08 Final Completion Delayed 66
14.09 Waiver of Claims 67

Article 15 – Suspension of Work and Termination 67
15.01 Owner May Suspend Work 67
15.02 Owner May Terminate for Cause 67
15.03 Owner May Terminate For Convenience 69
15.04 Contractor May Stop Work or Terminate 69

Article 16 – Dispute Resolution 70
16.01 Methods and Procedures 70
16.02 Arbitration 71
16.03 General 72

Article 17 – Miscellaneous 72
17.01 Giving Notice 72
17.02 Computation of Times 73
17.03 Cumulative Remedies 73
17.04 Survival of Obligations 73
17.05 Controlling Law 73
17.06 Headings 73
17.07 Professional Fees and Court Costs Included 73

Copyright © 2007 National Society of Professional Engineers for EJCDC. All rights reserved.

ARTICLE 1 – DEFINITIONS AND TERMINOLOGY

1.01 *Defined Terms*

A. Wherever used in the Bidding Requirements or Contract Documents and printed with initial capital letters, the terms listed below will have the meanings indicated which are applicable to both the singular and plural thereof. In addition to terms specifically defined, terms with initial capital letters in the Contract Documents include references to identified articles and paragraphs, and the titles of other documents or forms.

1. *Addenda*—Written or graphic instruments issued prior to the opening of Bids which clarify, correct, or change the Bidding Requirements or the proposed Contract Documents.

2. *Agreement*—The written instrument which is evidence of the agreement between Owner and Contractor covering the Work.

3. *Application for Payment*—The form acceptable to Engineer which is to be used by Contractor during the course of the Work in requesting progress or final payments and which is to be accompanied by such supporting documentation as is required by the Contract Documents.

4. *Asbestos*—Any material that contains more than one percent asbestos and is friable or is releasing asbestos fibers into the air above current action levels established by the United States Occupational Safety and Health Administration.

5. *Bid*—The offer or proposal of a Bidder submitted on the prescribed form setting forth the prices for the Work to be performed. May also be referred to as "Proposal" which may be used interchangeably and shall have the same meaning.

6. *Bidder*—The individual or entity who submits a Bid directly to Owner.

7. *Bidding Documents*—The Bidding Requirements and the proposed Contract Documents (including all Addenda).

8. *Bidding Requirements*—The advertisement or invitation to bid, Instructions to Bidders, Bid security of acceptable form, if any, and the Bid Form with any supplements.

9. *Change Order*—A document recommended by Engineer which is signed by Contractor and Owner and authorizes an addition, deletion, or revision in the Work or an adjustment in the Contract Price or the Contract Times, issued on or after the Effective Date of the Agreement.

10. *Claim*—A demand or assertion by Owner or Contractor seeking an adjustment of Contract Price or Contract Times, or both, or other relief with respect to the terms of the Contract. A demand for money or services by a third party is not a Claim.

11. *Contract*—The entire and integrated written agreement between the Owner and Contractor concerning the Work. The Contract supersedes prior negotiations, representations, or agreements, whether written or oral.

Copyright © 2007 National Society of Professional Engineers for EJCDC. All rights reserved.
with Standard Supplementary Conditions prepared by Woodard & Curran on behalf of and are as approved by Owner

12. *Contract Documents*—Those items so designated in the Agreement. Only printed or hard copies of the items listed in the Agreement are Contract Documents. Approved Shop Drawings, other Contractor submittals, and the reports and drawings of subsurface and physical conditions are not Contract Documents.

13. *Contract Price*—The moneys payable by Owner to Contractor for completion of the Work in accordance with the Contract Documents as stated in the Agreement (subject to the provisions of Paragraph 11.03 in the case of Unit Price Work).

14. *Contract Times*—The number of days or the dates stated in the Agreement to: (i) achieve Milestones, if any; (ii) achieve Substantial Completion; and (iii) complete the Work so that it is ready for final payment as evidenced by Engineer's written recommendation of final payment.

15. *Contractor*—The individual or entity with whom Owner has entered into the Agreement.

16. *Cost of the Work*—See Paragraph 11.01 for definition.

17. *Drawings*—That part of the Contract Documents prepared or approved by Engineer which graphically shows the scope, extent, and character of the Work to be performed by Contractor and complement the Specifications. Shop Drawings and other Contractor submittals are not Drawings as so defined. May also referred to as "Plans", which may be used interchangeably and shall have the same meaning. Notes on Drawings are directed to Contractor unless specifically noted otherwise.

18. *Effective Date of the Agreement*—The date indicated in the Agreement on which it becomes effective, but if no such date is indicated, it means the date on which the Agreement is signed and delivered by the last of the two parties to sign and deliver.

19. *Engineer*—The individual or entity named as such in the Agreement.

20. *Field Order*—A written order issued by Engineer which requires minor changes in the Work but which does not involve a change in the Contract Price or the Contract Times.

21. *General Requirements*—Sections of Division 1 of the Specifications.

22. *Hazardous Environmental Condition*—The presence at the Site of Asbestos, PCBs, Petroleum, Hazardous Waste, or Radioactive Material in such quantities or circumstances that may present a substantial danger to persons or property exposed thereto.

23. *Hazardous Waste*—The term Hazardous Waste shall have the meaning provided in Section 1004 of the Solid Waste Disposal Act (42 USC Section 6903) as amended from time to time.

24. *Laws and Regulations; Laws or Regulations*—Any and all applicable laws, rules, regulations, ordinances, codes, and orders of any and all governmental bodies, agencies, authorities, and courts having jurisdiction. See Paragraph 17.05 of these General Conditions.

Copyright © 2007 National Society of Professional Engineers for EJCDC. All rights reserved.

25. *Liens*—Charges, security interests, or encumbrances upon Project funds, real property, or personal property.

26. *Milestone*—A principal event specified in the Contract Documents relating to an intermediate completion date or time prior to Substantial Completion of all the Work.

27. *Notice of Award*—The written notice by Owner to the Successful Bidder stating that upon timely compliance by the Successful Bidder with the conditions precedent listed therein, Owner will sign and deliver the Agreement.

28. *Notice to Proceed*—A written notice given by Owner to Contractor fixing the date on which the Contract Times will commence to run and on which Contractor shall start to perform the Work under the Contract Documents.

29. *Owner*—The individual or entity with whom Contractor has entered into the Agreement and for whom the Work is to be performed.

30. *PCBs*—Polychlorinated biphenyls.

31. *Petroleum*—Petroleum, including crude oil or any fraction thereof which is liquid at standard conditions of temperature and pressure (60 degrees Fahrenheit and 14.7 pounds per square inch absolute), such as oil, petroleum, fuel oil, oil sludge, oil refuse, gasoline, kerosene, and oil mixed with other non-Hazardous Waste and crude oils.

32. *Progress Schedule*—A schedule, prepared and maintained by Contractor, describing the sequence and duration of the activities comprising the Contractor's plan to accomplish the Work within the Contract Times. May also be referred to as "Construction Schedule", which may be used interchangeably and shall have the same meaning.

33. *Project*—The total construction of which the Work to be performed under the Contract Documents may be the whole, or a part.

34. *Project Manual*—The bound documentary information prepared for bidding and constructing the Work. A listing of the contents of the Project Manual, which may be bound in one or more volumes, is contained in the table(s) of contents.

35. *Radioactive Material*—Source, special nuclear, or byproduct material as defined by the Atomic Energy Act of 1954 (42 USC Section 2011 et seq.) as amended from time to time.

36. *Resident Project Representative*—The authorized representative of Engineer who may be assigned to the Site or any part thereof.

37. *Samples*—Physical examples of materials, equipment, or workmanship that are representative of some portion of the Work and which establish the standards by which such portion of the Work will be judged.

38. *Schedule of Submittals*—A schedule, prepared and maintained by Contractor, of required submittals and the time requirements to support scheduled performance of related construction activities.

Copyright © 2007 National Society of Professional Engineers for EJCDC. All rights reserved.

39. *Schedule of Values*—A schedule, prepared and maintained by Contractor, allocating portions of the Contract Price to various portions of the Work and used as the basis for reviewing Contractor's Applications for Payment.

40. *Shop Drawings*—All drawings, diagrams, illustrations, schedules, and other data or information which are specifically prepared or assembled by or for Contractor and submitted by Contractor to illustrate some portion of the Work.

41. *Site*—Lands or areas indicated in the Contract Documents as being furnished by Owner upon which the Work is to be performed, including rights-of-way and easements for access thereto, and such other lands furnished by Owner which are designated for the use of Contractor.

42. *Specifications*—That part of the Contract Documents consisting of written requirements for materials, equipment, systems, standards and workmanship as applied to the Work, and certain administrative requirements and procedural matters applicable thereto. The Specifications are based on the guidelines of the Construction Specifications Institute (CSI) Project Resource Manual, and are directed to Contractor unless specifically noted otherwise. The words "shall be" are included by inference where a colon (:) is used within sentences or phrases in the Specifications.

43. *Subcontractor*—An individual or entity having a direct contract with Contractor or with any other Subcontractor for the performance of a part of the Work at the Site.

44. *Substantial Completion*—The time at which the Work (or a specified part thereof) has progressed to the point where, in the opinion of Engineer, the Work (or a specified part thereof) is sufficiently complete, in accordance with the Contract Documents, so that the Work (or a specified part thereof) can be utilized for the purposes for which it is intended. The terms "substantially complete" and "substantially completed" as applied to all or part of the Work refer to Substantial Completion thereof.

45. *Successful Bidder*—The Bidder submitting a responsive Bid to whom Owner makes an award.

46. *Supplementary Conditions*—That part of the Contract Documents which amends or supplements these General Conditions. Modifications made and highlighted herein and modifications and supplements included in the Additional Supplementary Conditions have been prepared by Engineer on behalf of and are as approved by Owner.

47. *Supplier*—A manufacturer, fabricator, supplier, distributor, materialman, or vendor having a direct contract with Contractor or with any Subcontractor to furnish materials or equipment to be incorporated in the Work by Contractor or Subcontractor.

48. *Underground Facilities*—All underground pipelines, conduits, ducts, cables, wires, manholes, vaults, tanks, tunnels, or other such facilities or attachments, and any encasements containing such facilities, including those that convey electricity, gases, steam, liquid petroleum products, telephone or other communications, cable television,

Copyright © 2007 National Society of Professional Engineers for EJCDC. All rights reserved.
with Standard Supplementary Conditions prepared by Woodard & Curran on behalf of and are as approved by Owner

water, wastewater, storm water, other liquids or chemicals, or traffic or other control systems.

49. *Unit Price Work*—Work to be paid for on the basis of unit prices.

50. *Work*—The entire construction or the various separately identifiable parts thereof required to be provided under the Contract Documents. Work includes and is the result of performing or providing all labor, services, and documentation necessary to produce such construction, and furnishing, installing, and incorporating all materials and equipment into such construction, all as required by the Contract Documents.

51. *Work Change Directive*—A written statement to Contractor issued on or after the Effective Date of the Agreement and signed by Owner and recommended by Engineer ordering an addition, deletion, or revision in the Work, or responding to differing or unforeseen subsurface or physical conditions under which the Work is to be performed or to emergencies. A Work Change Directive will not change the Contract Price or the Contract Times but is evidence that the parties expect that the change ordered or documented by a Work Change Directive will be incorporated in a subsequently issued Change Order following negotiations by the parties as to its effect, if any, on the Contract Price or Contract Times.

B. Additional Terms

1. *Final Completion*—The time at which all Work is completed and ready for final payment in accordance with Paragraph 14.07 of these General Conditions.

2. *Industry Practice*—The written practices, methods, materials, supplies and equipment, as changed from time to time, that are commonly used in the industry applicable to the Project to design, construct and operate facilities and plants, or any practices, methods and acts, which in the exercise of reasonable judgment in light of the facts known at the time, could have been expected to accomplish the desired results consistent with good business practices, reliability, safety and expedition.

3. *Punch List*—a list of open items representing portions of the Work which Contractor, Engineer, Owner reasonably agree is not complete on the date of Substantial Completion or Final Completion, but which items will not significantly interfere with the safe, reliable operation and integrity of the Project or its intended use.

4. *Purchase Order*—A written agreement between Contractor and a Supplier for provision of material and equipment.

5. *Warranty Period*—the correction period after the date of Substantial Completion per Paragraph 13.07 of these General Conditions.

1.02 *Terminology*

A. The words and terms discussed in Paragraph 1.02.B through F are not defined but, when used in the Bidding Requirements or Contract Documents, have the indicated meaning.

Copyright © 2007 National Society of Professional Engineers for EJCDC. All rights reserved.
with Standard Supplementary Conditions prepared by Woodard & Curran on behalf of and are as approved by Owner

B. *Intent of Certain Terms or Adjectives:*

1. The Contract Documents include the terms “as allowed,” “as approved,” “as ordered,” “as directed” or terms of like effect or import to authorize an exercise of professional judgment by Engineer. In addition, the adjectives “reasonable,” “suitable,” “acceptable,” “proper,” “satisfactory,” or adjectives of like effect or import are used to describe an action or determination of Engineer as to the Work. It is intended that such exercise of professional judgment, action, or determination will be solely to evaluate, in general, the Work for compliance with the information in the Contract Documents and with the design concept of the Project as a functioning whole as shown or indicated in the Contract Documents (unless there is a specific statement indicating otherwise). The use of any such term or adjective is not intended to and shall not be effective to assign to Engineer any duty or authority to supervise or direct the performance of the Work, or any duty or authority to undertake responsibility contrary to the provisions of Paragraph 9.09 or any other provision of the Contract Documents.

C. *Day:*

1. The word “day” means a calendar day of 24 hours measured from midnight to the next midnight. However, in limited instances the parties have agreed explicitly by context to use the terms "business day" or "working day" to further define the meaning of the term day. See also Paragraph 17.02 of these General Conditions.

D. *Defective:*

1. The word “defective,” when modifying the word “Work,” refers to Work that is unsatisfactory, faulty, or deficient in that it:

   a. does not conform to the Contract Documents; or

   b. does not meet the requirements of any applicable inspection, reference standard, test, or approval referred to in the Contract Documents; or

   c. has been damaged prior to Engineer’s recommendation of final payment (unless responsibility for the protection thereof has been assumed by Owner at Substantial Completion in accordance with Paragraph 14.04 or 14.05).

E. *Furnish, Install, Perform, Provide:*

1. The word “furnish,” when used in connection with services, materials, or equipment, shall mean to supply and deliver said services, materials, or equipment to the Site (or some other specified location) ready for use or installation and in usable or operable condition.

2. The word “install,” when used in connection with services, materials, or equipment, shall mean to put into use or place in final position said services, materials, or equipment complete and ready for intended use.

Copyright © 2007 National Society of Professional Engineers for EJCDC. All rights reserved.

3. The words "perform" or "provide," when used in connection with services, materials, or equipment, shall mean to furnish and install said services, materials, or equipment complete and ready for intended use.

4. When "furnish," "install," "perform," or "provide" is not used in connection with services, materials, or equipment in a context clearly requiring an obligation of Contractor, "provide" is implied.

F. Unless stated otherwise in the Contract Documents, words or phrases that have a well-known technical or construction industry or trade meaning are used in the Contract Documents in accordance with such recognized meaning.

ARTICLE 2 – PRELIMINARY MATTERS

2.01 *Delivery of Bonds and Evidence of Insurance*

A. Prior to execution of the Agreement, Contractor shall deliver to Owner such bonds as Contractor may be required to furnish.

B. *Evidence of Insurance:* Prior to execution of the Agreement and before any Work at the Site is started, Contractor and Owner shall each deliver to the other, with copies to each additional insured identified in the Additional Supplementary Conditions, certificates of insurance (and other evidence of insurance which either of them or any additional insured may reasonably request) which Contractor and Owner respectively are required to purchase and maintain in accordance with Article 5.

2.02 *Copies of Documents*

A. Owner shall furnish to Contractor up to 5 printed or hard copies of the Contract Documents. Additional copies will be furnished upon request at the cost of reproduction.

2.03 *Commencement of Contract Times; Notice to Proceed*

A. The Contract Times will commence to run on the thirtieth day after the Effective Date of the Agreement or, if a Notice to Proceed is given, on the day indicated in the Notice to Proceed. A Notice to Proceed may be given at any time within 30 days after the Effective Date of the Agreement. In no event will the Contract Times commence to run later than the 90th day after the day of Bid opening or the thirtieth day after the Effective Date of the Agreement, unless mutually agreed otherwise.

2.04 *Starting the Work*

A. Contractor shall start to perform the Work on the date when the Contract Times commence to run. No Work shall be done at the Site prior to the date on which the Contract Times commence to run.

Copyright © 2007 National Society of Professional Engineers for EJCDC. All rights reserved.
with Standard Supplementary Conditions prepared by Woodard & Curran on behalf of and are as approved by Owner

2.05 *Before Starting Construction*

A. *Preliminary Schedules:* Within 10 days after the Effective Date of the Agreement (unless otherwise specified in the General Requirements), Contractor shall submit to Engineer for timely review:

1. a preliminary Progress Schedule indicating the times (numbers of days or dates) for starting and completing the various stages of the Work, including any Milestones specified in the Contract Documents, and the lead times for equipment and materials per the listing in subparagraph 2.05.A.4;

2. a preliminary Schedule of Submittals; and

3. a preliminary Schedule of Values for all of the Work which includes quantities and prices of items which when added together equal the Contract Price and subdivides the Work into component parts in sufficient detail to serve as the basis for progress payments during performance of the Work, which will be confirmed in writing by Contractor at the time of submission. Such prices will include an appropriate amount of overhead and profit applicable to each item of Work; and

4. a complete listing of equipment and materials with lead times between placing orders and delivery, including normal allowances of time for processing and correcting Shop Drawings. All orders for long lead items shall be placed within 30 days after Effective Date of the Agreement if delivery is critical to scheduling. Failure to place orders promptly may result in full liability for liquidated damages if Contract Times are not met.

B. *Evidence of Insurance*: In accordance with Paragraph 2.01.

2.06 *Preconstruction Conference; Designation of Authorized Representatives*

A. Before any Work at the Site is started, a conference attended by Owner, Contractor, Engineer, and others as appropriate will be held to establish a working understanding among the parties as to the Work and to discuss the schedules referred to in Paragraph 2.05.A, procedures for handling Shop Drawings and other submittals, processing Applications for Payment, and maintaining required records in accordance with the General Requirements.

B. At this conference Owner and Contractor each shall designate, in writing, a specific individual to act as its authorized representative with respect to the services and responsibilities under the Contract. Such individuals shall have the authority to transmit instructions, receive information, render decisions relative to the Contract, and otherwise act on behalf of each respective party.

2.07 *Initial Acceptance of Schedules*

A. At least 10 days before submission of the first Application for Payment a conference attended by Contractor, Engineer, and others as appropriate will be held to review for acceptability to Engineer as provided below the schedules submitted in accordance with Paragraph 2.05.A. Contractor shall have an additional 10 days to make corrections and adjustments and to complete and resubmit the schedules. No progress payment shall be made to Contractor until acceptable schedules are submitted to Engineer.

Copyright © 2007 National Society of Professional Engineers for EJCDC. All rights reserved.
with Standard Supplementary Conditions prepared by Woodard & Curran on behalf of and are as approved by Owner

1. The Progress Schedule will be acceptable to Engineer if it provides an orderly progression of the Work to completion within the Contract Times. Such acceptance will not impose on Engineer responsibility for the Progress Schedule, for sequencing, scheduling, or progress of the Work, nor interfere with or relieve Contractor from Contractor's full responsibility therefor.

2. Contractor's Schedule of Submittals will be acceptable to Engineer if it provides a workable arrangement for reviewing and processing the required submittals.

3. Contractor's Schedule of Values will be acceptable to Engineer as to form and substance if it provides a reasonable allocation of the Contract Price to component parts of the Work.

ARTICLE 3 – CONTRACT DOCUMENTS: INTENT, AMENDING, REUSE

3.01 *Intent*

A. The Contract Documents are complementary; what is required by one is as binding as if required by all and comprise the entire agreement between Owner and Contractor concerning the Work. If any term or provision of any of the Contract Documents, or the application thereof to any party or circumstance shall, to any extent, be determined to be invalid or unenforceable, the remaining provisions of the Contract Documents, or the application of such term or provision to parties or circumstances other than those as to which it is held invalid or unenforceable, shall not be affected thereby, and each term and provision of each of the Contract Documents shall be valid and shall be enforced to the fullest extent permitted by Laws and Regulations.

B. It is the intent of the Contract Documents to describe a functionally complete project (or part thereof) to be constructed in accordance with the Contract Documents. Any labor, documentation, services, materials, or equipment that reasonably may be inferred from the Contract Documents or from prevailing custom or trade usage as being required to produce the indicated result will be provided whether or not specifically called for, at no additional cost to Owner.

C. Clarifications and interpretations of the Contract Documents shall be issued by Engineer as provided in Article 9.

3.02 *Reference Standards*

A. Standards, Specifications, Codes, Laws, and Regulations

1. Reference to standards, specifications, manuals, or codes of any technical society, organization, or association, or to Laws or Regulations, whether such reference be specific or by implication, shall mean the standard, specification, manual, code, or Laws or Regulations in effect at the time of opening of Bids (or on the Effective Date of the Agreement if there were no Bids), except as may be otherwise specifically stated in the Contract Documents.

2. No provision of any such standard, specification, manual, or code, or any instruction of a Supplier, shall be effective to change the duties or responsibilities of Owner, Contractor, or

Copyright © 2007 National Society of Professional Engineers for EJCDC. All rights reserved.

Engineer, or any of their subcontractors, consultants, agents, or employees, from those set forth in the Contract Documents. No such provision or instruction shall be effective to assign to Owner, Engineer, or any of their officers, directors, members, partners, employees, agents, consultants, or subcontractors, any duty or authority to supervise or direct the performance of the Work or any duty or authority to undertake responsibility inconsistent with the provisions of the Contract Documents.

3.03 *Reporting and Resolving Discrepancies*

A. *Reporting Discrepancies:*

1. *Contractor's Review of Contract Documents Before Starting Work*: Before undertaking each part of the Work, Contractor shall carefully study and compare the Contract Documents and check and verify pertinent figures therein and all applicable field measurements. Contractor shall promptly report in writing to Engineer any conflict, error, ambiguity, or discrepancy which Contractor discovers, or has actual knowledge of, and shall obtain a written interpretation or clarification from Engineer before proceeding with any Work affected thereby.

2. *Contractor's Review of Contract Documents During Performance of Work*: If, during the performance of the Work, Contractor discovers any conflict, error, ambiguity, or discrepancy within the Contract Documents, or between the Contract Documents and (a) any applicable Law or Regulation , (b) any standard, specification, manual, or code, or (c) any instruction of any Supplier, then Contractor shall promptly report it to Engineer in writing. Contractor shall not proceed with the Work affected thereby (except in an emergency as required by Paragraph 6.16.A) until an amendment or supplement to the Contract Documents has been issued by one of the methods indicated in Paragraph 3.04.

3. Contractor shall not be liable to Owner or Engineer for failure to report any conflict, error, ambiguity, or discrepancy in the Contract Documents unless Contractor had actual knowledge thereof.

B. *Resolving Discrepancies:*

1. Except as may be otherwise specifically stated in the Contract Documents, the provisions of the Contract Documents shall take precedence in resolving any conflict, error, ambiguity, or discrepancy between the provisions of the Contract Documents and:

   a. the provisions of any standard, specification, manual, or code, or the instruction of any Supplier (whether or not specifically incorporated by reference in the Contract Documents); or

   b. the provisions of any Laws or Regulations applicable to the performance of the Work (unless such an interpretation of the provisions of the Contract Documents would result in violation of such Law or Regulation).

Copyright © 2007 National Society of Professional Engineers for EJCDC. All rights reserved.
with Standard Supplementary Conditions prepared by Woodard & Curran on behalf of and are as approved by Owner

3.04 *Amending and Supplementing Contract Documents*

A. The Contract Documents may be amended to provide for additions, deletions, and revisions in the Work or to modify the terms and conditions thereof by either a Change Order or a Work Change Directive.

B. The requirements of the Contract Documents may be supplemented, and minor variations and deviations in the Work may be authorized, by one or more of the following ways:

1. A Field Order;

2. Engineer's approval of a Shop Drawing or Sample (subject to the provisions of Paragraph 6.17.D.3); or

3. Engineer's written interpretation or clarification.

3.05 *Reuse of Documents*

A. Contractor and any Subcontractor or Supplier shall not:

1. have or acquire any title to or ownership rights in any of the Drawings, Specifications, or other documents (or copies of any thereof) prepared by or bearing the seal of Engineer or its consultants, including electronic media editions; or

2. reuse any such Drawings, Specifications, other documents, or copies thereof on extensions of the Project or any other project without written consent of Owner and Engineer and specific written verification or adaptation by Engineer.

B. The prohibitions of this Paragraph 3.05 will survive final payment, or termination of the Contract. Nothing herein shall preclude Contractor from retaining copies of the Contract Documents for record purposes.

3.06 *Electronic Data*

A. Unless otherwise stated in the Additional Supplementary Conditions, the data furnished by Owner or Engineer to Contractor, or by Contractor to Owner or Engineer, that may be relied upon are limited to the printed copies (also known as hard copies). Files in electronic media format of text, data, graphics, or other types are furnished only for the convenience of the receiving party. Any conclusion or information obtained or derived from such electronic files will be at the user's sole risk. If there is a discrepancy between the electronic files and the hard copies, the hard copies govern.

B. Because data stored in electronic media format can deteriorate or be modified inadvertently or otherwise without authorization of the data's creator, the party receiving electronic files agrees that it will perform acceptance tests or procedures within 60 days, after which the receiving party shall be deemed to have accepted the data thus transferred. Any errors detected within the 60-day acceptance period will be corrected by the transferring party.

Copyright © 2007 National Society of Professional Engineers for EJCDC. All rights reserved.

C. When transferring documents in electronic media format, the transferring party makes no representations as to long term compatibility, usability, or readability of documents resulting from the use of software application packages, operating systems, or computer hardware differing from those used by the data's creator.

ARTICLE 4 – AVAILABILITY OF LANDS; SUBSURFACE AND PHYSICAL CONDITIONS; HAZARDOUS ENVIRONMENTAL CONDITIONS; REFERENCE POINTS

4.01 *Availability of Lands*

A. Owner shall furnish the Site. Owner shall notify Contractor of any encumbrances or restrictions not of general application but specifically related to use of the Site with which Contractor must comply in performing the Work. Owner will obtain in a timely manner and pay for easements for permanent structures or permanent changes in existing facilities. If Contractor and Owner are unable to agree on entitlement to or on the amount or extent, if any, of any adjustment in the Contract Price or Contract Times, or both, as a result of any delay in Owner's furnishing the Site or a part thereof, Contractor may make a Claim therefor as provided in Paragraph 10.05.

B. Upon reasonable written request, Owner shall furnish Contractor with a current statement of record legal title and legal description of the lands upon which the Work is to be performed and Owner's interest therein as necessary for giving notice of or filing a mechanic's or construction lien against such lands in accordance with applicable Laws and Regulations.

C. Contractor shall provide for all additional lands and access thereto that may be required for temporary construction facilities or storage of materials and equipment.

4.02 *Subsurface and Physical Conditions*

A. *Reports and Drawings:* The Additional Supplementary Conditions identify:

1. those reports known to Owner of explorations and tests of subsurface conditions at or contiguous to the Site; and

2. those drawings known to Owner of physical conditions relating to existing surface or subsurface structures at the Site (except Underground Facilities).

B. *Limited Reliance by Contractor on Technical Data Authorized:* Contractor may rely upon the accuracy of the "technical data" contained in such reports and drawings, but such reports and drawings are not Contract Documents. Such "technical data" is identified in the Additional Supplementary Conditions. Except for such reliance on such "technical data," Contractor may not rely upon or make any claim against Owner or Engineer, or any of their officers, directors, members, partners, employees, agents, consultants, or subcontractors with respect to:

1. the completeness of such reports and drawings for Contractor's purposes, including, but not limited to, any aspects of the means, methods, techniques, sequences, and procedures of construction to be employed by Contractor, and safety precautions and programs incident thereto; or

Copyright © 2007 National Society of Professional Engineers for EJCDC. All rights reserved.
with Standard Supplementary Conditions prepared by Woodard & Curran on behalf of and are as approved by Owner

2. other data, interpretations, opinions, and information contained in such reports or shown or indicated in such drawings; or

3. any Contractor interpretation of or conclusion drawn from any "technical data" or any such other data, interpretations, opinions, or information.

4.03 *Differing Subsurface or Physical Conditions*

A. *Notice:* If Contractor believes that any subsurface or physical condition that is uncovered or revealed either:

1. is of such a nature as to establish that any "technical data" on which Contractor is entitled to rely as provided in Paragraph 4.02 is materially inaccurate; or

2. is of such a nature as to require a change in the Contract Documents; or

3. differs materially from that shown or indicated in the Contract Documents; or

4. is of an unusual nature, and differs materially from conditions ordinarily encountered and generally recognized as inherent in work of the character provided for in the Contract Documents;

then Contractor shall, promptly after becoming aware thereof and before further disturbing the subsurface or physical conditions or performing any Work in connection therewith (except in an emergency as required by Paragraph 6.16.A), notify Owner and Engineer in writing about such condition. Contractor shall not further disturb such condition or perform any Work in connection therewith (except as aforesaid) until receipt of written order to do so.

B. (Not Used)

C. *Possible Price and Times Adjustments:*

1. The Contract Price or the Contract Times, or both, may be equitably adjusted to the extent that the existence of such differing subsurface or physical condition causes an increase or decrease in Contractor's cost of, or time required for, performance of the Work; subject, however, to the following:

a. such condition must meet any one or more of the categories described in Paragraph 4.03.A; and

b. with respect to Work that is paid for on a unit price basis, any adjustment in Contract Price will be subject to the provisions of Paragraphs 9.07 and 11.03.

2. Contractor shall not be entitled to any adjustment in the Contract Price or Contract Times if:

a. Contractor knew of the existence of such conditions at the time Contractor made a final commitment to Owner with respect to Contract Price and Contract Times by the submission of a Bid or becoming bound under a negotiated contract; or

Copyright © 2007 National Society of Professional Engineers for EJCDC. All rights reserved.
with Standard Supplementary Conditions prepared by Woodard & Curran on behalf of and are as approved by Owner

b. the existence of such condition could reasonably have been discovered or revealed as a result of any examination, investigation, exploration, test, or study of the Site and contiguous areas required by the Bidding Requirements or Contract Documents to be conducted by or for Contractor prior to Contractor's making such final commitment;

c. Contractor failed to give the written notice as required by Paragraph 4.03.A,or

d. written notice is submitted after final payment.

3. If Owner and Contractor are unable to agree on entitlement to or on the amount or extent, if any, of any adjustment in the Contract Price or Contract Times, or both, a Claim may be made therefor as provided in Paragraph 10.05. However, neither Owner or Engineer, or any of their officers, directors, members, partners, employees, agents, consultants, or subcontractors shall be liable to Contractor for any claims, costs, losses, or damages (including but not limited to all fees and charges of engineers, architects, attorneys, and other professionals and all court or arbitration or other dispute resolution costs) sustained by Contractor on or in connection with any other project or anticipated project.

4.04 *Underground Facilities*

A. *Shown or Indicated:* The information and data shown or indicated in the Contract Documents with respect to existing Underground Facilities at or contiguous to the Site is based on information and data furnished to Owner or Engineer by the owners of such Underground Facilities, including Owner, or by others. Unless it is otherwise expressly provided in the Supplementary Conditions:

1. Owner and Engineer shall not be responsible for the accuracy or completeness of any such information or data provided by others; and

2. the cost of all of the following will be included in the Contract Price, and Contractor shall have full responsibility for:

a. reviewing and checking all such information and data;

b. locating all Underground Facilities shown or indicated in the Contract Documents;

c. coordination of the Work with the owners of such Underground Facilities, including Owner, during construction; and

d. the safety and protection of all such Underground Facilities and repairing any damage thereto resulting from the Work.

B. *Not Shown or Indicated:*

1. If an Underground Facility is uncovered or revealed at or contiguous to the Site which was not shown or indicated, or not shown or indicated with reasonable accuracy in the Contract Documents, Contractor shall, promptly after becoming aware thereof and before further disturbing conditions affected thereby or performing any Work in connection therewith (except in an emergency as required by Paragraph 6.16.A), identify the owner of such

Copyright © 2007 National Society of Professional Engineers for EJCDC. All rights reserved.

Underground Facility and give written notice to that owner and to Owner and Engineer. Engineer will promptly review the Underground Facility and determine the extent, if any, to which a change is required in the Contract Documents to reflect and document the consequences of the existence or location of the Underground Facility. During such time, Contractor shall be responsible for the safety and protection of such Underground Facility.

2. If Engineer concludes that a change in the Contract Documents is required, a Work Change Directive or a Change Order will be issued to reflect and document such consequences. An equitable adjustment shall be made in the Contract Price or Contract Times, or both, to the extent that they are attributable to the existence or location of any Underground Facility that was not shown or indicated or not shown or indicated with reasonable accuracy in the Contract Documents and that Contractor did not know of and could not reasonably have been expected to be aware of or to have anticipated. If Owner and Contractor are unable to agree on entitlement to or on the amount or extent, if any, of any such adjustment in Contract Price or Contract Times, Owner or Contractor may make a Claim therefor as provided in Paragraph 10.05.

3. Owner and Engineer, and the officers, directors, members, partners, employees, agents, consultants and subcontractors of each and any of them, shall not be liable to Contractor for any Claims, losses, or damages incurred by Contractor (including but not limited to all fees and changes of engineers, architects, attorneys, and other professionals and all court or arbitration or other dispute resolution costs) related to Underground Facilities not shown or indicated.

4.05 *Reference Points*

A. Owner shall provide engineering surveys to establish reference points for construction which in Engineer's judgment are necessary to enable Contractor to proceed with the Work. Contractor shall be responsible for laying out the Work, shall protect and preserve the established reference points and property monuments, and shall make no changes or relocations without the prior written approval of Owner. Contractor shall report to Engineer whenever any reference point or property monument is lost or destroyed or requires relocation because of necessary changes in grades or locations, and shall be responsible for the accurate replacement or relocation of such reference points or property monuments by professionally qualified personnel.

4.06 *Hazardous Environmental Condition at Site*

A. *Reports and Drawings:* The Additional Supplementary Conditions identify those reports and drawings known to Owner relating to Hazardous Environmental Conditions that have been identified at the Site.

B. *Limited Reliance by Contractor on Technical Data Authorized:* Contractor may rely upon the accuracy of the "technical data" contained in such reports and drawings, but such reports and drawings are not Contract Documents. Such "technical data" is identified in the Supplementary Conditions. Except for such reliance on such "technical data," Contractor may not rely upon or make any claim against Owner or Engineer, or any of their officers, directors, members, partners, employees, agents, consultants, or subcontractors with respect to:

Copyright © 2007 National Society of Professional Engineers for EJCDC. All rights reserved.
with Standard Supplementary Conditions prepared by Woodard & Curran on behalf of and are as approved by Owner

1. the completeness of such reports and drawings for Contractor's purposes, including, but not limited to, any aspects of the means, methods, techniques, sequences and procedures of construction to be employed by Contractor and safety precautions and programs incident thereto; or

2. other data, interpretations, opinions and information contained in such reports or shown or indicated in such drawings; or

3. any Contractor interpretation of or conclusion drawn from any "technical data" or any such other data, interpretations, opinions or information.

C. Contractor shall not be responsible for any Hazardous Environmental Condition uncovered or revealed at the Site which was not shown or indicated in Drawings or Specifications or identified in the Contract Documents to be within the scope of the Work. Contractor shall be responsible for a Hazardous Environmental Condition created with any materials brought to the Site by Contractor, Subcontractors, Suppliers, or anyone else for whom Contractor is responsible.

D. If Contractor encounters a Hazardous Environmental Condition or if Contractor or anyone for whom Contractor is responsible creates a Hazardous Environmental Condition, Contractor shall immediately: (i) secure or otherwise isolate such condition; (ii) stop all Work in connection with such condition and in any area affected thereby (except in an emergency as required by Paragraph 6.16.A); and (iii) notify Owner and Engineer (and promptly thereafter confirm such notice in writing). Owner shall promptly consult with Engineer concerning the necessity for Owner to retain a qualified expert to evaluate such condition or take corrective action, if any. Promptly after consulting with Engineer, Owner shall take such actions as are necessary to permit Owner to timely obtain required permits and provide Contractor the written notice required by Paragraph 4.06.E.

E. Contractor shall not be required to resume Work in connection with such condition or in any affected area until after Owner has obtained any required permits related thereto and delivered written notice to Contractor: (i) specifying that such condition and any affected area is or has been rendered safe for the resumption of Work; or (ii) specifying any special conditions under which such Work may be resumed safely. If Owner and Contractor cannot agree as to entitlement to or on the amount or extent, if any, of any adjustment in Contract Price or Contract Times, or both, as a result of such Work stoppage or such special conditions under which Work is agreed to be resumed by Contractor, either party may make a Claim therefor as provided in Paragraph 10.05.

F. If after receipt of such written notice Contractor does not agree to resume such Work based on a reasonable belief it is unsafe, or does not agree to resume such Work under such special conditions, then Owner may order the portion of the Work that is in the area affected by such condition to be deleted from the Work. If Owner and Contractor cannot agree as to entitlement to or on the amount or extent, if any, of an adjustment in Contract Price or Contract Times as a result of deleting such portion of the Work, then either party may make a Claim therefor as provided in Paragraph 10.05. Owner may have such deleted portion of the Work performed by Owner's own forces or others in accordance with Article 7.

Copyright © 2007 National Society of Professional Engineers for EJCDC. All rights reserved.

G. To the fullest extent permitted by Laws and Regulations, Owner shall indemnify and hold harmless Contractor, Subcontractors, and Engineer, and the officers, directors, members, partners, employees, agents, consultants, and subcontractors of each and any of them from and against all claims, costs, losses, and damages (including but not limited to all fees and charges of engineers, architects, attorneys, and other professionals and all court or arbitration or other dispute resolution costs) arising out of or relating to a Hazardous Environmental Condition, provided that such Hazardous Environmental Condition: (i) was not shown or indicated in the Drawings or Specifications or identified in the Contract Documents to be included within the scope of the Work, and (ii) was not created by Contractor or by anyone for whom Contractor is responsible. Nothing in this Paragraph 4.06.G shall obligate Owner to indemnify any individual or entity from and against the consequences of that individual's or entity's own negligence.

H. To the fullest extent permitted by Laws and Regulations, Contractor shall indemnify and hold harmless Owner and Engineer, and the officers, directors, members, partners, employees, agents, consultants, and subcontractors of each and any of them from and against all claims, costs, losses, and damages (including but not limited to all fees and charges of engineers, architects, attorneys, and other professionals and all court or arbitration or other dispute resolution costs) arising out of or relating to a Hazardous Environmental Condition created by Contractor or by anyone for whom Contractor is responsible. Nothing in this Paragraph 4.06.H shall obligate Contractor to indemnify any individual or entity from and against the consequences of that individual's or entity's own negligence.

I. The provisions of Paragraphs 4.02, 4.03, and 4.04 do not apply to a Hazardous Environmental Condition uncovered or revealed at the Site.

ARTICLE 5 – BONDS AND INSURANCE

5.01 *Performance, Payment, and Other Bonds*

A. Contractor shall furnish performance and payment bonds, each in an amount at least equal to the Contract Price as security for the faithful performance and payment of all of Contractor's obligations under the Contract Documents. These bonds shall remain in effect until one year after the date when final payment becomes due or until completion of the correction period specified in Paragraph 13.07, whichever is later, except as provided otherwise by Laws or Regulations or by the Contract Documents. Contractor shall also furnish such other bonds as are required by the Contract Documents.

B. All bonds shall be in the form prescribed by the Contract Documents except as provided otherwise by Laws or Regulations, and shall be executed by such sureties as are named in the list of "Companies Holding Certificates of Authority as Acceptable Sureties on Federal Bonds and as Acceptable Reinsuring Companies" as published in Circular 570 (amended) by the Financial Management Service, Surety Bond Branch, U.S. Department of the Treasury. All bonds signed by an agent or attorney-in-fact must be accompanied by a certified copy of that individual's authority to bind the surety. The evidence of authority shall show that it is effective on the date the agent or attorney-in-fact signed each bond.

C. If the surety on any bond furnished by Contractor is declared bankrupt or becomes insolvent or its right to do business is terminated in any state where any part of the Project is located or it

Copyright © 2007 National Society of Professional Engineers for EJCDC. All rights reserved.
with Standard Supplementary Conditions prepared by Woodard & Curran on behalf of and are as approved by Owner

ceases to meet the requirements of Paragraph 5.01.B, Contractor shall promptly notify Owner and Engineer and shall, within 5 days after the event giving rise to such notification, provide another bond and surety, both of which shall comply with the requirements of Paragraphs 5.01.B and 5.02.

5.02 *Licensed Sureties and Insurers*

A. All bonds and insurance required by the Contract Documents to be purchased and maintained by Owner or Contractor shall be obtained from surety or insurance companies that are duly licensed or authorized in the jurisdiction in which the Project is located to issue bonds or insurance policies for the limits and coverages so required. Such surety and insurance companies shall also meet such additional requirements and qualifications as may be provided in the Additional Supplementary Conditions.

5.03 *Certificates of Insurance*

A. Contractor shall deliver to Owner and Engineer, with copies to each additional insured and loss payee identified in the Additional Supplementary Conditions, certificates of insurance (and other evidence of insurance requested by Owner or any other additional insured) which Contractor is required to purchase and maintain.

B. Owner shall deliver to Contractor, with copies to each additional insured and loss payee identified in the Supplementary Conditions, certificates of insurance (and other evidence of insurance requested by Contractor or any other additional insured) which Owner is required to purchase and maintain.

C. Failure of Owner to demand such certificates or other evidence of Contractor's full compliance with these insurance requirements or failure of Owner to identify a deficiency in compliance from the evidence provided shall not be construed as a waiver of Contractor’s obligation to maintain such insurance.

D. Owner does not represent that insurance coverage and limits established in this Contract necessarily will be adequate to protect Contractor.

E. The insurance and insurance limits required herein shall not be deemed as a limitation on Contractor’s liability under the indemnities granted to Owner in the Contract Documents.

5.04 *Contractor’s Insurance*

A. Contractor shall purchase and maintain such insurance as is appropriate for the Work being performed, complies with the requirements of Article 5, and as will provide protection from claims set forth below which may arise out of or result from Contractor’s performance of the Work and Contractor’s other obligations under the Contract Documents, whether it is to be performed by Contractor, any Subcontractor or Supplier, or by anyone directly or indirectly employed by any of them to perform any of the Work, or by anyone for whose acts any of them may be liable:

1. claims under workers’ compensation, disability benefits, and other similar employee benefit acts;

Copyright © 2007 National Society of Professional Engineers for EJCDC. All rights reserved.
with Standard Supplementary Conditions prepared by Woodard & Curran on behalf of and are as approved by Owner

2. claims for damages because of bodily injury, occupational sickness or disease, or death of Contractor's employees;

3. claims for damages because of bodily injury, sickness or disease, or death of any person other than Contractor's employees;

4. claims for damages insured by reasonably available personal injury liability coverage which are sustained:

   a. by any person as a result of an offense directly or indirectly related to the employment of such person by Contractor, or

   b. by any other person for any other reason;

5. claims for damages, other than to the Work itself, because of injury to or destruction of tangible property wherever located, including loss of use resulting therefrom;

6. claims for damages because of bodily injury or death of any person or property damage arising out of the ownership, maintenance or use of any motor vehicle; and

7. claims arising out of operation of Laws or Regulations for damages because of bodily injury or death of any person or for damage to property.

B. The policies of insurance required by this Paragraph 5.04 shall:

1. with respect to insurance required by Paragraphs 5.04.A.3 through 5.04.A.7 inclusive, be written on an occurrence basis, include as additional insureds (subject to any customary exclusion regarding professional liability) Owner and Engineer, and any other individuals or entities identified in the Additional Supplementary Conditions, all of whom shall be listed as additional insureds, and include coverage for the respective officers, directors, members, partners, employees, agents, consultants, and subcontractors of each and any of all such additional insureds, and the insurance afforded to these additional insureds shall provide primary coverage for all claims covered thereby;

2. include at least the specific coverages and be written for not less than the limits of liability provided in the Supplementary Conditions or required by Laws or Regulations, whichever is greater;

3. include contractual liability insurance covering Contractor's indemnity obligations under Paragraphs 6.11 and 6.20;

4. contain a provision or endorsement that the coverage afforded will not be canceled, materially changed or renewal refused until at least 30 days prior written notice has been given to Owner and Engineer and Contractor and to each other additional insured identified in the Additional Supplementary Conditions to whom a certificate of insurance has been issued (and the certificates of insurance furnished by the Contractor pursuant to Paragraph 5.03 will so provide) and will contain waiver provisions in accordance with Paragraph 5.07;

Copyright © 2007 National Society of Professional Engineers for EJCDC. All rights reserved.

5. remain in effect at least until final payment and at all times thereafter when Contractor may be correcting, removing, or replacing defective Work in accordance with Paragraph 13.07; and

6. include completed operations coverage:

   a. Such insurance shall remain in effect for two years after final payment.

   b. Contractor shall furnish Owner and Engineer and each other additional insured identified in the Additional Supplementary Conditions, to whom a certificate of insurance has been issued, evidence satisfactory to Owner and any such additional insured of continuation of such insurance at final payment and one year thereafter.

7. In the event general liability insurance is provided on a claims-made policy, the retroactive date of such policy shall not be later than the date of the Notice to Proceed or the Effective Date of the Agreement, whichever is earlier. For construction periods extending beyond the expiration date of an initial claims-made policy, the retroactive date of all subsequent claims-made policies shall not be later than the date of the Notice to Proceed.

C. The limits of liability for the insurance required by Paragraph 5.04 of the General Conditions shall provide coverage for not less than the following amounts or greater where required by Laws and Regulations:

1. Workers' Compensation and related coverages under Paragraphs 5.04.A.1 and A.2 of the General Conditions:

Minimum limit of liability	Statutory
Applicable Federal (e.g., Longshoreman's)	Statutory
Employer's Liability	$1,000,000

2. Contractor's General Liability under Paragraphs 5.04.A.3 through A.6 of the General Conditions which shall include completed operations and product liability coverages and eliminate the exclusion with respect to property under the care, custody and control of Contractor:

   $3,000,000 per occurrence; $3,000,000 general aggregate; $3,000,000 Products/Completed operations aggregate):

   - Broad Form Property Damage Liability including completed operations, and including coverage for acts of terrorism
   - Completed Operations and Product Liability
   - Independent Contractors
   - Explosion, Collapse & Underground Hazards to be covered
   - Personal Injury Coverage, Exclusion "C" Deleted
   - Fire Legal Liability

   Excess or Umbrella Liability: $3,000,000 per occurrence; $3,000,000 general aggregate

Copyright © 2007 National Society of Professional Engineers for EJCDC. All rights reserved.

Owner's Protective Liability: $3,000,000 (per occurrence for bodily injury & property damage combined single limit).

3. Automobile Liability under Paragraph 5.04.A.6 of the General Conditions:

   Combined Single Limit of $2,000,000 for bodily injury & property damage covering Contractor and any vehicles owned, hired and non-owned by the Contractor

4. The Contractual Liability coverage required by Paragraph 5.04.B.3 of the General Conditions shall provide coverage for not less than $3,000,000 Bodily Injury per person and each accident and $3,000,000 Property Damage each accident and annual aggregate

Any self-insured retention (not allowed for Worker's Compensation) and/or deductibles must be identified and cannot exceed $100,000 per occurrence without the prior approval of the Owner. Contractor must provide either an audited financial statement to confirm solvency or a letter of credit guaranteeing the $100,000 in case of loss for the duration of the Project and for the Correction Period.

5.05 *Owner's Liability Insurance*

A. In addition to the insurance required to be provided by Contractor under Paragraph 5.04, Owner, at Owner's option, may purchase and maintain at Owner's expense Owner's own liability insurance as will protect Owner against claims which may arise from operations under the Contract Documents.

5.06 *Property Insurance*

A. Contractor shall purchase and maintain property insurance upon the Work at the Site in the amount of the full replacement cost thereof. Contractor shall be responsible for any deductible amounts or self-insured retention as may be provided in the Additional Supplementary Conditions or required by Laws and Regulations). This insurance shall:

   1. include the interests of Owner, Contractor, Subcontractors, and Engineer, and any other individuals or entities identified in the Additional Supplementary Conditions, and the officers, directors, members, partners, employees, agents, consultants, and subcontractors of each and any of them, each of whom is deemed to have an insurable interest and shall be listed as a loss payee;

   2. be written on a Builder's Risk "all-risk" policy form that shall at least include insurance for physical loss or damage to the Work, temporary buildings, falsework, and materials and equipment in transit, and shall insure against at least the following perils or causes of loss: fire, lightning, extended coverage, theft, vandalism and malicious mischief, earthquake, collapse, debris removal, demolition occasioned by enforcement of Laws and Regulations, water damage (other than that caused by flood), and such other perils or causes of loss as may be specifically required by the Additional Supplementary Conditions.

   3. include expenses incurred in the repair or replacement of any insured property (including but not limited to fees and charges of engineers and architects);

Copyright © 2007 National Society of Professional Engineers for EJCDC. All rights reserved.
with Standard Supplementary Conditions prepared by Woodard & Curran on behalf of and are as approved by Owner

4. cover materials and equipment stored at the Site or at another location that was agreed to in writing by Owner prior to being incorporated in the Work, provided that such materials and equipment have been included in an Application for Payment recommended by Engineer;

5. allow for partial utilization of the Work by Owner;

6. include testing and startup; and

7. be maintained in effect until final payment is made unless otherwise agreed to in writing by Owner, Contractor, and Engineer with 30 days written notice to each other loss payee to whom a certificate of insurance has been issued.

B. (Not used)

C. All the policies of insurance (and the certificates or other evidence thereof) required to be purchased and maintained by Contractor will contain provisions and endorsements specified in Paragraph 5.04.

D. Owner shall not be responsible for purchasing and maintaining any property insurance specified in this Paragraph 5.06 to protect the interests of Contractor, Subcontractors, or others in the Work.

E.

5.07 *Waiver of Rights*

A. Owner and Contractor intend that all policies purchased in accordance with Paragraph 5.06 will protect Owner, Contractor, Subcontractors, and Engineer, and all other individuals or entities identified in the Additional Supplementary Conditions as loss payees (and the officers, directors, members, partners, employees, agents, consultants, and subcontractors of each and any of them) in such policies and will provide primary coverage for all losses and damages caused by the perils or causes of loss covered thereby. All such policies shall contain provisions to the effect that in the event of payment of any loss or damage the insurers will have no rights of recovery against any of the insureds or loss payees thereunder. Owner and Contractor waive all rights against each other and their respective officers, directors, members, partners, employees, agents, consultants and subcontractors of each and any of them for all losses and damages caused by, arising out of or resulting from any of the perils or causes of loss covered by such policies and any other property insurance applicable to the Work; and, in addition, waive all such rights against Subcontractors and Engineer, and all other individuals or entities identified in the Additional Supplementary Conditions as loss payees (and the officers, directors, members, partners, employees, agents, consultants, and subcontractors of each and any of them) under such policies for losses and damages so caused. None of the above waivers shall extend to the rights that any party making such waiver may have to the proceeds of insurance held by Owner as trustee or otherwise payable under any policy so issued.

B. Owner waives all rights against Contractor, Subcontractors, and Engineer, and the officers, directors, members, partners, employees, agents, consultants and subcontractors of each and any of them for:

Copyright © 2007 National Society of Professional Engineers for EJCDC. All rights reserved.

1. loss due to business interruption, loss of use, or other consequential loss extending beyond direct physical loss or damage to Owner's property or the Work caused by, arising out of, or resulting from fire or other perils whether or not insured by Owner; and

2. loss or damage to the completed Project or part thereof caused by, arising out of, or resulting from fire or other insured peril or cause of loss covered by any property insurance maintained on the completed Project or part thereof by Owner during partial utilization pursuant to Paragraph 14.05, after Substantial Completion pursuant to Paragraph 14.04, or after final payment pursuant to Paragraph 14.07.

C. Any insurance policy maintained by Owner covering any loss, damage or consequential loss referred to in Paragraph 5.07.B shall contain provisions to the effect that in the event of payment of any such loss, damage, or consequential loss, the insurers will have no rights of recovery against Contractor, Subcontractors, or Engineer, and the officers, directors, members, partners, employees, agents, consultants and subcontractors of each and any of them.

5.08 *Receipt and Application of Insurance Proceeds*

A. (Not used) .

5.09 *Acceptance of Bonds and Insurance; Option to Replace*

A. If Owner has any objection to the coverage afforded by or other provisions of the bonds or insurance required to be purchased and maintained by the the Contractor in accordance with Article 5 on the basis of non-conformance with the Contract Documents, the Owner shall so notify the Contractor in writing within 10 days after receipt of the certificates (or other evidence requested) required by Paragraph 2.01.B. Contractor shall provide to the Owner, such additional information in respect of insurance provided as the other may reasonably request. If Contractor does not purchase or maintain all of the bonds and insurance required by the Contract Documents, Contractor shall notify the Owner in writing of such failure to purchase prior to the start of the Work, or of such failure to maintain prior to any change in the required coverage. Without prejudice to any other right or remedy, the Owner may elect to obtain equivalent bonds or insurance to protect Owner's interests at the expense of the Contractor, and a Change Order shall be issued to adjust the Contract Price accordingly.

5.10 *Partial Utilization, Acknowledgment of Property Insurer*

A. If Owner finds it necessary to occupy or use a portion or portions of the Work prior to Substantial Completion of all the Work as provided in Paragraph 14.05, no such use or occupancy shall commence before the insurers providing the property insurance pursuant to Paragraph 5.06 have acknowledged notice thereof and in writing effected any changes in coverage necessitated thereby. The insurers providing the property insurance shall consent by endorsement on the policy or policies, but the property insurance shall not be canceled or permitted to lapse on account of any such partial use or occupancy.

Copyright © 2007 National Society of Professional Engineers for EJCDC. All rights reserved.

ARTICLE 6 – CONTRACTOR'S RESPONSIBILITIES

6.01 *Supervision and Superintendence*

A. Contractor shall supervise, inspect, and direct the Work competently and efficiently, devoting such attention thereto and applying such skills and expertise as may be necessary to perform the Work in accordance with the Contract Documents. Contractor shall be solely responsible for the means, methods, techniques, sequences, and procedures of construction. Contractor shall not be responsible for the negligence of Owner or Engineer in the design or specification of a specific means, method, technique, sequence, or procedure of construction which is shown or indicated in and expressly required by the Contract Documents.

B. At all times during the progress of the Work, Contractor shall assign a competent resident superintendent who shall not be replaced without written notice to Owner and Engineer except under extraordinary circumstances.

6.02 *Labor; Working Hours*

A. Contractor shall provide competent, suitably qualified personnel to survey and lay out the Work and perform construction as required by the Contract Documents. Contractor shall at all times maintain good discipline and order at the Site.

1. Contractor shall comply with the Equal Employment Opportunity Requirements included in the Additional Supplementary Conditions.

B. Except as otherwise required for the safety or protection of persons or the Work or property at the Site or adjacent thereto, and except as otherwise stated in the Contract Documents, all Work at the Site shall be performed during regular working hours. Contractor will not permit the performance of Work on a Saturday, Sunday, or any legal holiday without Owner's written consent (which will not be unreasonably withheld) given after prior written notice to Engineer.

6.03 *Services, Materials, and Equipment*

A. Unless otherwise specified in the Contract Documents, Contractor shall provide and assume full responsibility for all services, materials, equipment, labor, transportation, construction equipment and machinery, tools, appliances, fuel, power, light, heat, telephone, water, sanitary facilities, temporary facilities, and all other facilities and incidentals necessary for the performance, testing, start-up, and completion of the Work.

B. All materials and equipment incorporated into the Work shall be as specified or, if not specified, shall be of good quality and new, except as otherwise provided in the Contract Documents. All special warranties and guarantees required by the Specifications shall expressly run to the benefit of Owner. If required by Engineer, Contractor shall furnish satisfactory evidence (including reports of required tests) as to the source, kind, and quality of materials and equipment.

C. All materials and equipment shall be stored, applied, installed, connected, erected, protected, used, cleaned, and conditioned in accordance with instructions of the applicable Supplier, except as otherwise may be provided in the Contract Documents.

Copyright © 2007 National Society of Professional Engineers for EJCDC. All rights reserved.

D. Provision of any instructions:

1. will not be effective to assign to Owner, or any of Owner's consultants, agents or employees, any duty or authority to supervise or direct the furnishing or performance of the Work or any duty or authority to undertake responsibility contrary to the provisions of Paragraph 8.09; and

2. will not be effective to assign to Engineer, or any of Engineer's consultants, agents or employees, any duty or authority to supervise or direct the furnishing or performance of the Work or any duty or authority to undertake responsibility contrary to the provisions of Paragraph 9.09.

6.04 *Progress Schedule*

A. Contractor shall adhere to the Progress Schedule established in accordance with Paragraph 2.07 as it may be adjusted from time to time as provided below.

1. Contractor shall submit to Engineer for acceptance (to the extent indicated in Paragraph 2.07) proposed adjustments in the Progress Schedule that will not result in changing the Contract Times. Such adjustments will comply with any provisions of the General Requirements applicable thereto.

2. Proposed adjustments in the Progress Schedule that will change the Contract Times shall be submitted in accordance with the requirements of Article 12. Adjustments in Contract Times may only be made by a Change Order.

6.05 *Substitutes and "Or-Equals"*

A. Whenever an item of material or equipment is specified or described in the Contract Documents by using the name of a proprietary item, make or catalogue number, or the name of a particular Supplier, the specification or description is intended to establish the type, function, appearance, and quality required. Unless the specification or description contains or is followed by words reading that no like, equivalent, or "or-equal" item or no substitution is permitted, other items of material or equipment or material or equipment of other Suppliers may be submitted to Engineer for review under the circumstances described below.

1. *"Or-Equal" Items:* If in Engineer's sole discretion an item of material or equipment proposed by Contractor is functionally equal to that named and sufficiently similar so that no change in related Work will be required, it may be considered by Engineer as an "or-equal" item, in which case review and approval of the proposed item may, in Engineer's sole discretion, be accomplished without compliance with some or all of the requirements for approval of proposed substitute items. For the purposes of this Paragraph 6.05.A.1, a proposed item of material or equipment will be considered functionally equal to an item so named if:

a. in the exercise of reasonable judgment Engineer determines that:

1) it is at least equal in materials of construction, quality, durability, appearance, strength, and design characteristics;

Copyright © 2007 National Society of Professional Engineers for EJCDC. All rights reserved.
with Standard Supplementary Conditions prepared by Woodard & Curran on behalf of and are as approved by Owner

2) it will reliably perform at least equally well the function and achieve the results imposed by the design concept of the completed Project as a functioning whole; and

3) it has a proven record of performance and availability of responsive service.

b. Contractor certifies that, if approved and incorporated into the Work:

1) there will be no increase in cost to the Owner or increase in Contract Times; and

2) it will conform substantially to the detailed requirements of the item named in the Contract Documents.

2. Substitute Items:

a. If in Engineer's sole discretion an item of material or equipment proposed by Contractor does not qualify as an "or-equal" item under Paragraph 6.05.A.1, it will be considered a proposed substitute item.

b. Contractor shall submit sufficient information as provided below to allow Engineer to determine if the item of material or equipment proposed is essentially equivalent to that named and an acceptable substitute therefor. Requests for review of proposed substitute items of material or equipment will not be accepted by Engineer from anyone other than Contractor.

c. The requirements for review by Engineer will be as set forth in Paragraph 6.05.A.2.d, as supplemented by the General Requirements, and as Engineer may decide is appropriate under the circumstances.

d. Contractor shall make written application to Engineer for review of a proposed substitute item of material or equipment that Contractor seeks to furnish or use. The application:

1) shall certify that the proposed substitute item will:

a) perform adequately the functions and achieve the results called for by the general design,

b) be similar in substance to that specified, and

c) be suited to the same use as that specified;

2) will state:

a) the extent, if any, to which the use of the proposed substitute item will prejudice Contractor's achievement of Substantial Completion on time,

b) whether use of the proposed substitute item in the Work will require a change in any of the Contract Documents (or in the provisions of any other direct

Copyright © 2007 National Society of Professional Engineers for EJCDC. All rights reserved.
with Standard Supplementary Conditions prepared by Woodard & Curran on behalf of and are as approved by Owner

contract with Owner for other work on the Project) to adapt the design to the proposed substitute item, and

c) whether incorporation or use of the proposed substitute item in connection with the Work is subject to payment of any license fee or royalty;

3) will identify:

a) all variations of the proposed substitute item from that specified, and

b) available engineering, sales, maintenance, repair, and replacement services; and

4) shall contain an itemized estimate of all costs or credits that will result directly or indirectly from use of such substitute item, including costs of redesign and claims of other contractors affected by any resulting change.

B. *Substitute Construction Methods or Procedures:* If a specific means, method, technique, sequence, or procedure of construction is expressly required by the Contract Documents, Contractor may furnish or utilize a substitute means, method, technique, sequence, or procedure of construction approved by Engineer. Contractor shall submit sufficient information to allow Engineer, in Engineer's sole discretion, to determine that the substitute proposed is equivalent to that expressly called for by the Contract Documents. The requirements for review by Engineer will be similar to those provided in Paragraph 6.05.A.2.

C. *Engineer's Evaluation:* Engineer will be allowed a reasonable time within which to evaluate each proposal or submittal made pursuant to Paragraphs 6.05.A and 6.05.B. Engineer may require Contractor to furnish additional data about the proposed substitute item. Engineer will be the sole judge of acceptability. No "or equal" or substitute will be ordered, installed or utilized until Engineer's review is complete, which will be evidenced by a Change Order in the case of a substitute and an approved Shop Drawing for an "or equal." Engineer will advise Contractor in writing of any negative determination.

D. *Special Guarantee:* Owner may require Contractor to furnish at Contractor's expense a special performance guarantee or other surety with respect to any substitute.

E. *Engineer's Cost Reimbursement*: Engineer will record Engineer's costs in evaluating a substitute proposed or submitted by Contractor pursuant to Paragraphs 6.05.A.2 and 6.05.B. Whether or not Engineer approves a substitute so proposed or submitted by Contractor, Contractor shall reimburse Owner for the reasonable charges of Engineer for evaluating each such proposed substitute. Contractor shall also reimburse Owner for the reasonable charges of Engineer for making changes in the Contract Documents (or in the provisions of any other direct contract with Owner) resulting from the acceptance of each proposed substitute.

F. *Contractor's Expense*: Contractor shall provide all data in support of any proposed substitute or "or-equal" at Contractor's expense.

Copyright © 2007 National Society of Professional Engineers for EJCDC. All rights reserved.

6.06 *Concerning Subcontractors, Suppliers, and Others*

A. Contractor shall not employ any Subcontractor, Supplier, or other individual or entity (including those acceptable to Owner as indicated in Paragraph 6.06.B), whether initially or as a replacement, against whom Owner may have reasonable objection. Contractor shall not be required to employ any Subcontractor, Supplier, or other individual or entity to furnish or perform any of the Work against whom Contractor has reasonable objection.

B. If the Bidding Requirements or Additional Supplementary Conditions require the identity of certain Subcontractors, Suppliers, or other individuals or entities to be submitted to Owner in advance for acceptance by Owner by a specified date prior to the Effective Date of the Agreement, and the Contractor has submitted a list thereof in accordance with the Bidding Requirements or Additional Supplementary Conditions (which shall be included as an attachment to the Agreement), Owner's acceptance (either in writing or by failing to make written objection thereto by the date indicated for acceptance or objection in the Bidding Documents or the Contract Documents) of any such Subcontractor, Supplier, or other individual or entity so identified may be revoked on the basis of reasonable objection after due investigation. Contractor shall submit an acceptable replacement for the rejected Subcontractor, Supplier, or other individual or entity, and the Contract Price will be adjusted by the difference in the cost occasioned by such replacement, and an appropriate Change Order will be issued. No acceptance by Owner of any such Subcontractor, Supplier, or other individual or entity, whether initially or as a replacement, shall constitute a waiver of any right of Owner or Engineer to reject defective Work.

C. Contractor shall be fully responsible to Owner and Engineer for all acts and omissions of the Subcontractors, Suppliers, and other individuals or entities performing or furnishing any of the Work just as Contractor is responsible for Contractor's own acts and omissions. Nothing in the Contract Documents:

1. shall create for the benefit of any such Subcontractor, Supplier, or other individual or entity any contractual relationship between Owner or Engineer and any such Subcontractor, Supplier or other individual or entity; nor

2. shall create any obligation on the part of Owner or Engineer to pay or to see to the payment of any moneys due any such Subcontractor, Supplier, or other individual or entity except as may otherwise be required by Laws and Regulations.

D. Contractor shall be solely responsible for scheduling and coordinating the Work of Subcontractors, Suppliers, and other individuals or entities performing or furnishing any of the Work under a direct or indirect contract with Contractor.

E. Contractor shall require all Subcontractors, Suppliers, and such other individuals or entities performing or furnishing any of the Work to communicate with Engineer through Contractor.

F. The divisions and sections of the Specifications and the identifications of any Drawings shall not control Contractor in dividing the Work among Subcontractors or Suppliers or delineating the Work to be performed by any specific trade.

Copyright © 2007 National Society of Professional Engineers for EJCDC. All rights reserved.

G. All Work performed for Contractor by a Subcontractor or Supplier will be pursuant to an appropriate agreement between Contractor and the Subcontractor or Supplier which specifically binds the Subcontractor or Supplier to the applicable terms and conditions of the Contract Documents for the benefit of Owner and Engineer.

1. Whenever any such agreement is with a Subcontractor or Supplier who is listed as a loss payee on the property insurance provided in Paragraph 5.06, the agreement between the Contractor and the Subcontractor or Supplier will contain provisions whereby the Subcontractor or Supplier waives all rights against Owner, Contractor, Engineer, and all other individuals or entities identified in the Additional Supplementary Conditions to be listed as insureds or loss payees (and the officers, directors, members, partners, employees, agents, consultants, and subcontractors of each and any of them) for all losses and damages caused by, arising out of, relating to, or resulting from any of the perils or causes of loss covered by such policies and any other property insurance applicable to the Work. If the insurers on any such policies require separate waiver forms to be signed by any Subcontractor or Supplier, Contractor will obtain the same.

2. Such agreement between Contractor and the Subcontractor or Supplier shall specifically include arbitration provisions similar to those in Article 16 and provisions required by Laws and Regulations identified in the various Additional Supplementary Conditions.

6.07 *Patent Fees and Royalties*

A. Contractor shall pay all license fees and royalties and assume all costs incident to the use in the performance of the Work or the incorporation in the Work of any invention, design, process, product, or device which is the subject of patent rights or copyrights held by others. If a particular invention, design, process, product, or device is specified in the Contract Documents for use in the performance of the Work and if, to the actual knowledge of Owner or Engineer, its use is subject to patent rights or copyrights calling for the payment of any license fee or royalty to others, the existence of such rights shall be disclosed by Owner in the Contract Documents.

B. To the fullest extent permitted by Laws and Regulations, Owner shall indemnify and hold harmless Contractor, and its officers, directors, members, partners, employees, agents, consultants, and subcontractors from and against all claims, costs, losses, and damages (including but not limited to all fees and charges of engineers, architects, attorneys, and other professionals, and all court or arbitration or other dispute resolution costs) arising out of or relating to any infringement of patent rights or copyrights incident to the use in the performance of the Work or resulting from the incorporation in the Work of any invention, design, process, product, or device specified in the Contract Documents, but not identified as being subject to payment of any license fee or royalty to others required by patent rights or copyrights.

C. To the fullest extent permitted by Laws and Regulations, Contractor shall indemnify and hold harmless Owner and Engineer, and the officers, directors, members, partners, employees, agents, consultants and subcontractors of each and any of them from and against all claims, costs, losses, and damages (including but not limited to all fees and charges of engineers, architects, attorneys, and other professionals and all court or arbitration or other dispute resolution costs) arising out of or relating to any infringement of patent rights or copyrights

Copyright © 2007 National Society of Professional Engineers for EJCDC. All rights reserved.

incident to the use in the performance of the Work or resulting from the incorporation in the Work of any invention, design, process, product, or device not specified in the Contract Documents.

D. At the Owner's option, Contractor shall defend claims in connection with any alleged infringement of such rights.

6.08 *Permits*

A. Unless otherwise provided in the Supplementary Conditions, Contractor shall obtain and pay for all construction permits and licenses. Owner shall assist Contractor, when necessary, in obtaining such permits and licenses. Contractor shall pay all governmental charges and inspection fees necessary for the prosecution of the Work which are applicable at the time of opening of Bids, or, if there are no Bids, on the Effective Date of the Agreement. Owner shall pay all charges of utility owners for connections for providing permanent service to the Work.

1. Owner will provide the permits and licenses indicated in the Additional Supplementary Conditions, if any.

6.09 *Laws and Regulations*

A. Contractor shall give all notices required by and shall comply with all Laws and Regulations applicable to the performance of the Work. See Additional Supplementary Conditions for specific requirements, if any. Except where otherwise expressly required by applicable Laws and Regulations, neither Owner nor Engineer shall be responsible for monitoring Contractor's compliance with any Laws or Regulations.

B. If Contractor observes that the Specifications or Drawings are at variance with any Laws or Regulations, Contractor shall give Engineer prompt written notice thereof, and any necessary changes will be authorized by one of the methods set forth in Paragraph 3.04. If Contractor performs any Work knowing or having reason to know that it is contrary to Laws or Regulations, Contractor shall bear all claims, costs, losses, and damages (including but not limited to all fees and charges of engineers, architects, attorneys, and other professionals and all court or arbitration or other dispute resolution costs) arising out of or relating to such Work. However, it shall not be Contractor's responsibility to make certain that the Specifications and Drawings are in accordance with Laws and Regulations, but this shall not relieve Contractor of Contractor's obligations under Paragraph 3.03.

C. Changes in Laws or Regulations not known at the time of opening of Bids (or, on the Effective Date of the Agreement if there were no Bids) having an effect on the cost or time of performance of the Work shall be the subject of an adjustment in Contract Price or Contract Times. If Owner and Contractor are unable to agree on entitlement to or on the amount or extent, if any, of any such adjustment, a Claim may be made therefor as provided in Paragraph 10.05.

Copyright © 2007 National Society of Professional Engineers for EJCDC. All rights reserved.

6.10 *Taxes*

A. Contractor shall pay all sales, consumer, use, and other similar taxes required to be paid by Contractor in accordance with the Laws and Regulations of the place of the Project which are applicable during the performance of the Work.

B. If Owner is sales tax exempt, specific provisions shall be as set forth in the Additional Supplementary Conditions.

6.11 *Use of Site and Other Areas*

A. *Limitation on Use of Site and Other Areas:*

1. Contractor shall confine construction equipment, the storage of materials and equipment, and the operations of workers to the Site and other areas permitted by Laws and Regulations, and shall not unreasonably encumber the Site and other areas with construction equipment or other materials or equipment. Contractor shall assume full responsibility for any damage to any such land or area, or to the owner or occupant thereof, or of any adjacent land or areas resulting from the performance of the Work.

2. Should any claim be made by any such owner or occupant because of the performance of the Work, Contractor shall promptly settle with such other party by agreement or otherwise resolve the claim by arbitration or other dispute resolution proceeding or at law.

3. To the fullest extent permitted by Laws and Regulations, Contractor shall indemnify and hold harmless Owner and Engineer, and the officers, directors, members, partners, employees, agents, consultants and subcontractors of each and any of them from and against all claims, costs, losses, and damages (including but not limited to all fees and charges of engineers, architects, attorneys, and other professionals and all court or arbitration or other dispute resolution costs) arising out of or relating to any claim or action, legal or equitable, brought by any such owner or occupant against Owner, Engineer, or any other party indemnified hereunder to the extent caused by or based upon Contractor's performance of the Work.

B. *Removal of Debris During Performance of the Work:* During the progress of the Work Contractor shall keep the Site and other areas free from accumulations of waste materials, rubbish, and other debris. Removal and disposal of such waste materials, rubbish, and other debris shall conform to applicable Laws and Regulations.

C. *Cleaning:* Prior to Substantial Completion of the Work Contractor shall clean the Site and the Work and make it ready for utilization by Owner. At the completion of the Work, Contractor shall remove from the Site all tools, appliances, construction equipment and machinery, and surplus materials and shall restore to original condition all property not designated for alteration by the Contract Documents.

D. *Loading Structures:* Contractor shall not load nor permit any part of any structure to be loaded in any manner that will endanger the structure, nor shall Contractor subject any part of the Work or adjacent property to stresses or pressures that will endanger it.

Copyright © 2007 National Society of Professional Engineers for EJCDC. All rights reserved.
with Standard Supplementary Conditions prepared by Woodard & Curran on behalf of and are as approved by Owner

6.12 *Record Documents*

A. Contractor shall maintain in a safe place at the Site one record copy of all Drawings, Specifications, Addenda, Change Orders, Work Change Directives, Field Orders, and written interpretations and clarifications in good order and annotated to show changes made during construction. These record documents together with all approved Samples and a counterpart of all approved Shop Drawings will be available to Engineer for reference. Upon completion of the Work, these record documents, Samples, and Shop Drawings and other closeout submittals will be delivered to Engineer for Owner.

6.13 *Safety and Protection*

A. Contractor shall be solely responsible for initiating, maintaining and supervising all safety precautions and programs in connection with the Work. Such responsibility does not relieve Subcontractors of their responsibility for the safety of persons or property in the performance of their work, nor for compliance with applicable safety Laws and Regulations. Contractor shall take all necessary precautions for the safety of, and shall provide the necessary protection to prevent damage, injury or loss to:

1. all persons on the Site or who may be affected by the Work;

2. all the Work and materials and equipment to be incorporated therein, whether in storage on or off the Site; and

3. other property at the Site or adjacent thereto, including trees, shrubs, lawns, walks, pavements, roadways, structures, utilities, and Underground Facilities not designated for removal, relocation, or replacement in the course of construction.

B. Contractor shall comply with all applicable Laws and Regulations relating to the safety of persons or property, or to the protection of persons or property from damage, injury, or loss; and shall erect and maintain all necessary safeguards for such safety and protection. Contractor shall notify owners of adjacent property and of Underground Facilities and other utility owners when prosecution of the Work may affect them, and shall cooperate with them in the protection, removal, relocation, and replacement of their property.

C. Contractor shall comply with the applicable requirements of Owner's safety programs and statutory safety requirements included in the Additional Supplementary Conditions, if any.

D. Contractor shall inform Owner and Engineer of the specific requirements of Contractor's safety program with which Owner's and Engineer's employees and representatives must comply while at the Site.

E. All damage, injury, or loss to any property referred to in Paragraph 6.13.A.2 or 6.13.A.3 caused, directly or indirectly, in whole or in part, by Contractor, any Subcontractor, Supplier, or any other individual or entity directly or indirectly employed by any of them to perform any of the Work, or anyone for whose acts any of them may be liable, shall be remedied by Contractor (except damage or loss attributable to the fault of Drawings or Specifications or to the acts or omissions of Owner or Engineer or anyone employed by any of them, or anyone for whose acts

Copyright © 2007 National Society of Professional Engineers for EJCDC. All rights reserved.

any of them may be liable, and not attributable, directly or indirectly, in whole or in part, to the fault or negligence of Contractor or any Subcontractor, Supplier, or other individual or entity directly or indirectly employed by any of them).

F. Contractor's duties and responsibilities for safety and for protection of the Work shall continue until such time as all the Work is completed and Engineer has issued a notice to Owner and Contractor in accordance with Paragraph 14.07.B that the Work is acceptable (except as otherwise expressly provided in connection with Substantial Completion).

6.14 *Safety Representative*

A. Contractor shall designate a qualified and experienced safety representative at the Site whose duties and responsibilities shall be the prevention of accidents and the maintaining and supervising of safety precautions and programs.

6.15 *Hazard Communication Programs*

A. Contractor shall be responsible for coordinating any exchange of material safety data sheets or other hazard communication information required to be made available to or exchanged between or among employers at the Site in accordance with Laws or Regulations.

6.16 *Emergencies*

A. In emergencies affecting the safety or protection of persons or the Work or property at the Site or adjacent thereto, Contractor is obligated to act to prevent threatened damage, injury, or loss. Contractor shall give Engineer prompt written notice if Contractor believes that any significant changes in the Work or variations from the Contract Documents have been caused thereby or are required as a result thereof. If Engineer determines that a change in the Contract Documents is required because of the action taken by Contractor in response to such an emergency, a Work Change Directive or Change Order will be issued.

6.17 *Shop Drawings and Samples*

A. Contractor shall submit Shop Drawings and Samples to Engineer for review and approval in accordance with the accepted Schedule of Submittals (as required by Paragraph 2.07). Each submittal will be identified as Engineer may require.

1. Shop Drawings:

a. Submit number of copies specified in the General Requirements.

b. Data shown on the Shop Drawings will be complete with respect to quantities, dimensions, specified performance and design criteria, materials, and similar data to show Engineer the services, materials, and equipment Contractor proposes to provide and to enable Engineer to review the information for the limited purposes required by Paragraph 6.17.D.

2. Samples:

Copyright © 2007 National Society of Professional Engineers for EJCDC. All rights reserved.
with Standard Supplementary Conditions prepared by Woodard & Curran on behalf of and are as approved by Owner

a. Submit number of Samples specified in the Specifications.

b. Clearly identify each Sample as to material, Supplier, pertinent data such as catalog numbers, the use for which intended and other data as Engineer may require to enable Engineer to review the submittal for the limited purposes required by Paragraph 6.17.D.

B. Where a Shop Drawing or Sample is required by the Contract Documents or the Schedule of Submittals, any related Work performed prior to Engineer's review and approval of the pertinent submittal will be at the sole expense and responsibility of Contractor.

C. *Submittal Procedures:*

1. Before submitting each Shop Drawing or Sample, Contractor shall have:

a. reviewed and coordinated each Shop Drawing or Sample with other Shop Drawings and Samples and with the requirements of the Work and the Contract Documents;

b. determined and verified all field measurements, quantities, dimensions, specified performance and design criteria, installation requirements, materials, catalog numbers, and similar information with respect thereto;

c. determined and verified the suitability of all materials offered with respect to the indicated application, fabrication, shipping, handling, storage, assembly, and installation pertaining to the performance of the Work; and

d. determined and verified all information relative to Contractor's responsibilities for means, methods, techniques, sequences, and procedures of construction, and safety precautions and programs incident thereto.

2. Each submittal shall bear a stamp or specific written certification that Contractor has satisfied Contractor's obligations under the Contract Documents with respect to Contractor's review and approval of that submittal.

3. With each submittal, Contractor shall give Engineer specific written notice of any variations that the Shop Drawing or Sample may have from the requirements of the Contract Documents. This notice shall be both a written communication separate from the Shop Drawings or Sample submittal; and, in addition, by a specific notation made on each Shop Drawing or Sample submitted to Engineer for review and approval of each such variation.

D. *Engineer's Review:*

1. Engineer will provide timely review of Shop Drawings and Samples in accordance with the Schedule of Submittals acceptable to Engineer. Engineer's review and approval will be only to determine if the items covered by the submittals will, after installation or incorporation in the Work, conform to the information given in the Contract Documents and be compatible with the design concept of the completed Project as a functioning whole as indicated by the Contract Documents.

Copyright © 2007 National Society of Professional Engineers for EJCDC. All rights reserved.

2. Engineer's review and approval will not extend to means, methods, techniques, sequences, or procedures of construction (except where a particular means, method, technique, sequence, or procedure of construction is specifically and expressly called for by the Contract Documents) or to safety precautions or programs incident thereto. The review and approval of a separate item as such will not indicate approval of the assembly in which the item functions.

3. Engineer's review and approval shall not relieve Contractor from responsibility for any variation from the requirements of the Contract Documents unless Contractor has complied with the requirements of Paragraph 6.17.C.3 and Engineer has given written approval of each such variation by specific written notation thereof incorporated in or accompanying the Shop Drawing or Sample. Engineer's review and approval shall not relieve Contractor from responsibility for complying with the requirements of Paragraph 6.17.C.1. or for errors or omissions in a Shop Drawing or Sample.

E. *Resubmittal Procedures:*

1. Contractor shall make corrections required by Engineer and shall return the required number of corrected copies of Shop Drawings and submit, as required, new Samples for review and approval. Contractor shall direct specific attention in writing to revisions other than the corrections called for by Engineer on previous submittals.

2. Contractor shall furnish required submittals with sufficient information and accuracy in order to obtain required approval of an item with no more than 3 submittals. Engineer will record Engineer's time for reviewing subsequent submittals of Shop Drawings, samples, or other items requiring approval and Contractor shall reimburse Owner for Engineer's charges for such time.

3. In the event that Contractor requests a change of a previously approved item, Contractor shall reimburse Owner for Engineer's charges for its review time unless the need for such change is beyond the control of Contractor.

6.18 *Continuing the Work*

A. Contractor shall carry on the Work and adhere to the Progress Schedule during all disputes or disagreements with Owner. No Work shall be delayed or postponed pending resolution of any disputes or disagreements, except as permitted by Paragraph 15.04 or as Owner and Contractor may otherwise agree in writing.

6.19 *Contractor's General Warranty and Guarantee*

A. Contractor warrants and guarantees to Owner that all Work will be in accordance with the Contract Documents and in accordance with Subcontractor warranties, manufacturers and Suppliers warranties on equipment and material, and extended or special warranties and will not be defective for the correction period specified in 13.07. Owner and Engineer and their officers, directors, members, partners, employees, agents, consultants, and subcontractors shall be entitled to rely on representation of Contractor's warranty and guarantee.

Copyright © 2007 National Society of Professional Engineers for EJCDC. All rights reserved.

1. Contractor shall obtain and preserve for the benefit of the Owner:

    a. manufacturers' and Suppliers' written warranties and guarantees on equipment and material incorporated into the Work;

    b. written warranties and guarantees from each Subcontractor engaged in the performance of the Work; and

2. extended or special warranties.

B. Contractor's warranty and guarantee hereunder excludes defects or damage caused by:

1. abuse, modification, or improper maintenance or operation by persons other than Contractor, Subcontractors, Suppliers, or any other individual or entity for whom Contractor is responsible; or

2. normal wear and tear under normal usage.

C. Contractor's obligation to perform and complete the Work in accordance with the Contract Documents shall be absolute. None of the following will constitute an acceptance of Work that is not in accordance with the Contract Documents or a release of Contractor's obligation to perform the Work in accordance with the Contract Documents:

1. observations by Engineer;

2. recommendation by Engineer or payment by Owner of any progress or final payment;

3. the issuance of a certificate of Substantial Completion by Engineer or any payment related thereto by Owner;

4. use or occupancy of the Work or any part thereof by Owner;

5. any review and approval of a Shop Drawing or Sample submittal or the issuance of a notice of acceptability by Engineer;

6. any inspection, test, or approval by others;

7. any correction of defective Work by Owner; or.

8. any acceptance by Owner or any failure to do so.

D. Contractor shall prepare and execute a written general warranty and guarantee applicable to the Work reflecting the provisions of this Paragraph 6.19, Article 13 and other applicable provisions of the Contract Documents pertaining to warranties and guarantees, and Subcontractor, manufacturers and Supplier, and extended or special warranties and guarantees. Contractor shall submit this written general warranty and guarantee in accordance with Article 14 and the General Requirements.

E. Provision of any warranties or guarantees:

Copyright © 2007 National Society of Professional Engineers for EJCDC. All rights reserved.
with Standard Supplementary Conditions prepared by Woodard & Curran on behalf of and are as approved by Owner

1. will not be effective to assign to Owner, or any of Owner's consultants, agents or employees, any duty or authority to supervise or direct the furnishing or performance of the Work or any duty or authority to undertake responsibility contrary to the provisions of Paragraph 8.09; and

2. will not be effective to assign to Engineer, or any of Engineer's consultants, agents or employees, any duty or authority to supervise or direct the furnishing or performance of the Work or any duty or authority to undertake responsibility contrary to the provisions of Paragraph 9.09.

F. The warranty and guarantee provisions of this Paragraph 6.19 shall be in addition to and not in limitation of any other warranties, guarantees or remedies allowed by Law or the Contract Documents.

6.20 *Indemnification*

A. To the fullest extent permitted by Laws and Regulations, Contractor shall indemnify, defend (with counsel designated by the insurer accepting liability for the Claim or damage or, in lieu thereof, counsel acceptable to the Owner), and hold harmless Owner and Engineer, and the officers, directors, members, partners, employees, agents, consultants and subcontractors of each and any of them from and against all claims, costs, losses, and damages (including but not limited to all fees and charges of engineers, architects, attorneys, and other professionals and all court or arbitration or other dispute resolution costs) arising out of or relating to the performance of the Work, provided that any such claim, cost, loss, or damage is attributable to bodily injury, sickness, disease, or death, or to injury to or destruction of tangible property (other than the Work itself), including the loss of use resulting therefrom but only to the extent caused by any negligent act or omission of Contractor, any Subcontractor, any Supplier, or any individual or entity directly or indirectly employed by any of them to perform any of the Work or anyone for whose acts any of them may be liable .

B. In any and all claims against Owner or Engineer or any of their officers, directors, members, partners, employees, agents, consultants, or subcontractors by any employee (or the survivor or personal representative of such employee) of Contractor, any Subcontractor, any Supplier, or any individual or entity directly or indirectly employed by any of them to perform any of the Work, or anyone for whose acts any of them may be liable, the indemnification obligation under Paragraph 6.20.A shall not be limited in any way by any limitation on the amount or type of damages, compensation, or benefits payable by or for Contractor or any such Subcontractor, Supplier, or other individual or entity under workers' compensation acts, disability benefit acts, or other employee benefit acts.

1. Without limiting the generality of the preceding Paragraph, the Contractor hereby specifically agrees to indemnify, defend, and hold harmless the Owner and Engineer from all such claims, losses or expenses which arise out of injuries of employees of the Contractor or any of its Subcontractors or Suppliers of any tier related to performance of the Work. It is the Owner intention that all financial risk of injuries related to the Work be borne by the Contractor, and that the Owner have no financial responsibility, direct or indirect, for any such claims.

Copyright © 2007 National Society of Professional Engineers for EJCDC. All rights reserved.

C. The indemnification obligations of Contractor under Paragraph 6.20.A shall not extend to the liability of Engineer and Engineer's officers, directors, members, partners, employees, agents, consultants and subcontractors arising out of:

1. the preparation or approval of maps, Drawings, opinions, reports, surveys, Change Orders, designs, or Specifications, provided however, that if the claim, cost, loss or damage referred to in this Paragraph 6.20 results from failure of the Engineer to discover a condition, Underground Facilities or object which is underground or otherwise not reasonably observable by the Engineer, and if said failure to discover either was or should have been apparent to the Contractor in that the said condition or object is omitted from the Engineer's maps, Drawings, opinions, reports, surveys, Change Orders, designs or Specifications, then the Contractor shall be liable for indemnification of the Engineer and Owner under Paragraph 6.20 for claims, costs, losses and damages resulting from said failure to discover unless Contractor shall have notified Engineer of the existence and location of such condition or object prior to the occurrence of such claims, costs, losses and damages and in sufficient time for Engineer to have made provisions therefor.; or

2. giving directions or instructions, or failing to give them, if that is the primary cause of the injury or damage; or

3. caused by the negligent acts, errors or omissions of any of them.

6.21 *Delegation of Professional Design Services*

A. Contractor will not be required to provide professional design services unless such services are specifically required by the Contract Documents for a portion of the Work or unless such services are required to carry out Contractor's responsibilities for construction means, methods, techniques, sequences and procedures. Contractor shall not be required to provide professional services in violation of applicable law.

B. If professional design services or certifications by a design professional related to systems, materials or equipment are specifically required of Contractor by the Contract Documents, Owner and Engineer will specify all performance and design criteria that such services must satisfy. Contractor shall cause such services or certifications to be provided by a properly licensed professional, whose signature and seal shall appear on all drawings, calculations, specifications, certifications, Shop Drawings and other submittals prepared by such professional. Shop Drawings and other submittals related to the Work designed or certified by such professional, if prepared by others, shall bear such professional's written approval when submitted to Engineer.

C. Owner and Engineer shall be entitled to rely upon the adequacy, accuracy and completeness of the services, certifications or approvals performed by such design professionals, provided Owner and Engineer have specified to Contractor all performance and design criteria that such services must satisfy.

D. Pursuant to this Paragraph 6.21, Engineer's review and approval of design calculations and design drawings will be only for the limited purpose of checking for conformance with performance and design criteria given and the design concept expressed in the Contract

Copyright © 2007 National Society of Professional Engineers for EJCDC. All rights reserved.

Documents. Engineer's review and approval of Shop Drawings and other submittals (except design calculations and design drawings) will be only for the purpose stated in Paragraph 6.17.D.1.

E. Contractor shall not be responsible for the adequacy of the performance or design criteria required by the Contract Documents.

ARTICLE 7 – OTHER WORK AT THE SITE

7.01 *Related Work at Site*

A. Owner may perform other work related to the Project at the Site with Owner's employees, or through other direct contracts therefor, or have other work performed by utility owners. If such other work is not noted in the Contract Documents, then:

1. written notice thereof will be given to Contractor prior to starting any such other work; and

2. if Owner and Contractor are unable to agree on entitlement to or on the amount or extent, if any, of any adjustment in the Contract Price or Contract Times that should be allowed as a result of such other work, a Claim may be made therefor as provided in Paragraph 10.05.

B. Contractor shall afford each other contractor who is a party to such a direct contract, each utility owner, and Owner, if Owner is performing other work with Owner's employees, proper and safe access to the Site, provide a reasonable opportunity for the introduction and storage of materials and equipment and the execution of such other work, and properly coordinate the Work with theirs. Contractor shall do all cutting, fitting, and patching of the Work that may be required to properly connect or otherwise make its several parts come together and properly integrate with such other work. Contractor shall not endanger any work of others by cutting, excavating, or otherwise altering such work; provided, however, that Contractor may cut or alter others' work with the written consent of Engineer and the others whose work will be affected. The duties and responsibilities of Contractor under this Paragraph are for the benefit of such utility owners and other contractors to the extent that there are comparable provisions for the benefit of Contractor in said direct contracts between Owner and such utility owners and other contractors.

C. If the proper execution or results of any part of Contractor's Work depends upon work performed by others under this Article 7, Contractor shall inspect such other work and promptly report to Engineer in writing any delays, defects, or deficiencies in such other work that render it unavailable or unsuitable for the proper execution and results of Contractor's Work. Contractor's failure to so report will constitute an acceptance of such other work as fit and proper for integration with Contractor's Work except for latent defects and deficiencies in such other work.

7.02 *Coordination*

A. If Owner intends to contract with others for the performance of other work on the Project at the Site, the following will be set forth in Additional Supplementary Conditions:

Copyright © 2007 National Society of Professional Engineers for EJCDC. All rights reserved.
with Standard Supplementary Conditions prepared by Woodard & Curran on behalf of and are as approved by Owner

1. the individual or entity who will have authority and responsibility for coordination of the activities among the various contractors will be identified;

2. the specific matters to be covered by such authority and responsibility will be itemized; and

3. the extent of such authority and responsibilities will be provided.

B. Unless otherwise provided in the Additional Supplementary Conditions, Owner shall have sole authority and responsibility for such coordination.

7.03 *Legal Relationships*

A. Paragraphs 7.01.A and 7.02 are not applicable for utilities not under the control of Owner.

B. Each other direct contract of Owner under Paragraph 7.01.A shall provide that the other contractor is liable to Owner and Contractor for the reasonable direct delay and disruption costs incurred by Contractor as a result of the other contractor's wrongful actions or inactions.

C. Contractor shall be liable to Owner and any other contractor under direct contract to Owner for the reasonable direct delay and disruption costs incurred by such other contractor as a result of Contractor's wrongful action or inactions.

ARTICLE 8 – OWNER'S RESPONSIBILITIES

8.01 *Communications to Contractor*

A. Except as otherwise provided in these General Conditions, Owner shall issue all communications to Contractor through Engineer.

8.02 *Replacement of Engineer*

A. In case of termination of the employment of Engineer, Owner shall appoint an engineer to whom Contractor makes no reasonable objection, whose status under the Contract Documents shall be that of the former Engineer.

8.03 *Furnish Data*

A. Owner shall promptly furnish the data required of Owner under the Contract Documents.

8.04 *Pay When Due*

A. Owner shall make payments to Contractor when they are due as provided in Paragraphs 14.02.C and 14.07.C.

8.05 *Lands and Easements; Reports and Tests*

A. Owner's duties with respect to providing lands and easements and providing engineering surveys to establish reference points are set forth in Paragraphs 4.01 and 4.05. Paragraph 4.02 refers to Owner's identifying and making available to Contractor copies of reports of

Copyright © 2007 National Society of Professional Engineers for EJCDC. All rights reserved.

explorations and tests of subsurface conditions and drawings of physical conditions relating to existing surface or subsurface structures at the Site.

8.06 *Insurance*

A. Owner's responsibilities, if any, with respect to purchasing and maintaining liability and property insurance are set forth in Article 5.

8.07 *Change Orders*

A. Owner is obligated to execute Change Orders as indicated in Paragraph 10.03.

8.08 *Inspections, Tests, and Approvals*

A. Owner's responsibility with respect to certain inspections, tests, and approvals is set forth in Paragraph 13.03.B.

8.09 *Limitations on Owner's Responsibilities*

A. The Owner shall not supervise, direct, or have control or authority over, nor be responsible for, Contractor's means, methods, techniques, sequences, or procedures of construction, or the safety precautions and programs incident thereto, or for any failure of Contractor to comply with Laws and Regulations applicable to the performance of the Work. Owner will not be responsible for Contractor's failure to perform the Work in accordance with the Contract Documents.

8.10 *Undisclosed Hazardous Environmental Condition*

A. Owner's responsibility in respect to an undisclosed Hazardous Environmental Condition is set forth in Paragraph 4.06.

8.11 *Evidence of Financial Arrangements*

A. Upon request of Contractor, Owner shall furnish Contractor reasonable evidence that financial arrangements have been made to satisfy Owner's obligations under the Contract Documents.

8.12 *Compliance with Safety Program*

A. While at the Site, Owner's employees and representatives shall comply with the specific applicable requirements of Contractor's safety programs of which Owner has been informed pursuant to Paragraph 6.13.D.

ARTICLE 9 – ENGINEER'S STATUS DURING CONSTRUCTION

9.01 *Owner's Representative*

A. Engineer will be Owner's representative during the construction period. The duties and responsibilities and the limitations of authority of Engineer as Owner's representative during construction are set forth in the Contract Documents.

Copyright © 2007 National Society of Professional Engineers for EJCDC. All rights reserved.

9.02 *Visits to Site*

A. Engineer will make visits to the Site at intervals appropriate to the various stages of construction as Engineer deems necessary in order to observe as an experienced and qualified design professional the progress that has been made and the quality of the various aspects of Contractor's executed Work. Based on information obtained during such visits and observations, Engineer, for the benefit of Owner, will determine, in general, if the Work is proceeding in accordance with the Contract Documents. Engineer will not be required to make exhaustive or continuous inspections on the Site to check the quality or quantity of the Work. Engineer's efforts will be directed toward providing for Owner a greater degree of confidence that the completed Work will conform generally to the Contract Documents. On the basis of such visits and observations, Engineer will keep Owner informed of the progress of the Work and will endeavor to guard Owner against defective Work.

B. Engineer's visits and observations are subject to all the limitations on Engineer's authority and responsibility set forth in Paragraph 9.09. Particularly, but without limitation, during or as a result of Engineer's visits or observations of Contractor's Work, Engineer will not supervise, direct, control, or have authority over or be responsible for Contractor's means, methods, techniques, sequences, or procedures of construction, or the safety precautions and programs incident thereto, or for any failure of Contractor to comply with Laws and Regulations applicable to the performance of the Work.

9.03 *Project Representative*

A. If Owner and Engineer agree, Engineer will furnish a Resident Project Representative to assist Engineer in providing more extensive observation of the Work. The authority and responsibilities of any such Resident Project Representative and assistants will be as provided herein, and limitations on the responsibilities thereof will be as provided in Paragraph 9.09. If Owner designates another representative or agent to represent Owner at the Site who is not Engineer's consultant, agent or employee, the responsibilities and authority and limitations thereon of such other individual or entity will be as provided in the Additional Supplementary Conditions.

B. The Resident Project Representative (RPR) will be Engineer's employee or agent at the Site, will act as directed by and under the supervision of Engineer, and will confer with Engineer regarding RPR's actions. RPR's dealings in matters pertaining to the Work in general shall be with Engineer and Contractor. RPR's dealings with Subcontractors shall be through or with the full knowledge and approval of Contractor. The RPR shall:

1. *Schedules:* Review the progress schedule, schedule of Shop Drawing and Sample submittals, and schedule of values prepared by Contractor and consult with Engineer concerning acceptability.

2. *Conferences and Meetings:* Attend meetings with Contractor, such as preconstruction conferences, progress meetings, job conferences and other project-related meetings, and prepare and circulate copies of minutes thereof.

3. *Liaison*:

Copyright © 2007 National Society of Professional Engineers for EJCDC. All rights reserved.
with Standard Supplementary Conditions prepared by Woodard & Curran on behalf of and are as approved by Owner

a. Serve as Engineer's liaison with Contractor, working principally through Contractor's authorized representative, assist in providing information regarding the intent of the Contract Documents.

b. Assist Engineer in serving as Owner's liaison with Contractor when Contractor's operations affect Owner's on-Site operations.

c. Assist in obtaining from Owner additional details or information, when required for proper execution of the Work.

4. *Interpretation of Contract Documents:* Report to Engineer when clarifications and interpretations of the Contract Documents are needed and transmit to Contractor clarifications and interpretations as issued by Engineer.

5. *Shop Drawings and Samples*:

a. Record date of receipt of Samples and approved Shop Drawings.

b. Receive Samples which are furnished at the Site by Contractor, and notify Engineer of availability of Samples for examination.

6. *Modifications*:

a. Consider and evaluate Contractor's suggestions for modifications in Drawings or Specifications and report such suggestions, together with RPR's recommendations, to Engineer.

b. Transmit to Contractor in writing, decisions as issued by Engineer.

7. *Review of Work and Rejection of Defective Work*:

a. Conduct on-Site observations of Contractor's work in progress to assist Engineer in determining if the Work is in general proceeding in accordance with the Contract Documents.

b. Report to Engineer whenever RPR believes that any part of Contractor's work in progress will not produce a completed Project that conforms generally to the Contract Documents or will imperil the integrity of the design concept of the completed Project as a functioning whole as indicated in the Contract Documents, or has been damaged, or does not meet the requirements of any inspection, test or approval required to be made; and advise Engineer of that part of work in progress that RPR believes should be corrected or rejected or should be uncovered for observation, or requires special testing, inspection or approval.

8. *Inspections, Tests, and System Startups*:

a. Verify that tests, equipment, and systems start-ups and operating and maintenance training are conducted in the presence of appropriate Owner's personnel, and that Contractor maintains adequate records thereof.

Copyright © 2007 National Society of Professional Engineers for EJCDC. All rights reserved.

b. Observe, record, and report to Engineer appropriate details relative to the test procedures and systems start-ups.

9. *Records*:

a. Record names, addresses, fax numbers, e-mail addresses, web site locations, and telephone numbers of all Contractors, Subcontractors, and major Suppliers of materials and equipment.

b. Maintain records for use in preparing Project documentation.

10. *Reports*:

a. Furnish to Engineer periodic reports as required of progress of the Work and of Contractor's compliance with the progress schedule and schedule of Shop Drawing and Sample submittals.

b. Draft and recommend to Engineer proposed Change Orders, Work Change Directives, and Field Orders. Obtain backup material from Contractor.

c. Immediately notify Engineer of the occurrence of any Site accidents, emergencies, acts of God endangering the Work, damage to property by fire or other causes, or the discovery of any Hazardous Environmental Condition or conditions that may impede the compliant operation of existing facilities on Site.

11. *Payment Requests:* Review Applications for Payment with Contractor for compliance with the established procedure for their submission and forward with recommendations to Engineer, noting particularly the relationship of the payment requested to the schedule of values, Work completed, and materials and equipment delivered at the Site but not incorporated in the Work.

12. *Certificates, Operation and Maintenance Manuals:* During the course of the Work, verify that materials and equipment certificates, operation and maintenance manuals and other data required by the Specifications to be assembled and furnished by Contractor are applicable to the items actually installed and in accordance with the Contract Documents, and have these documents delivered to Engineer for review and forwarding to Owner prior to payment for that part of the Work.

13. *Completion*:

a. Participate in a Substantial Completion inspection, assist in the determination of Substantial Completion and the preparation of lists of items to be completed or corrected.

b. Participate in a final inspection in the company of Engineer, Owner, and Contractor and prepare a final list of items to be completed and deficiencies to be remedied.

Copyright © 2007 National Society of Professional Engineers for EJCDC. All rights reserved.

c. Observe whether all items on the final list have been completed or corrected and make recommendations to Engineer concerning acceptance and issuance of the Notice of Acceptability of the Work.

C. The RPR shall not:

1. Authorize any deviation from the Contract Documents or substitution of materials or equipment (including "or-equal" items).

2. Exceed limitations of Engineer's authority as set forth in the Contract Documents.

3. Undertake any of the responsibilities of Contractor, Subcontractors, Suppliers, or Contractor's superintendent.

4. Advise on, issue directions relative to, or assume control over any aspect of the means, methods, techniques, sequences or procedures of Contractor's work unless such advice or directions are specifically required by the Contract Documents.

5. Advise on, issue directions regarding, or assume control over safety practices, precautions, and programs in connection with the activities or operations of Owner or Contractor.

6. Participate in specialized field or laboratory tests or inspections conducted off-site by others except as specifically authorized by Engineer.

7. Accept Shop Drawing or Sample submittals from anyone other than Contractor.

8. Authorize Owner to occupy the Project in whole or in part or determine operational protocol that may affect the compliant operation of existing facilities.

9.04 *Authorized Variations in Work*

A. Engineer may authorize minor variations in the Work from the requirements of the Contract Documents which do not involve an adjustment in the Contract Price or the Contract Times and are compatible with the design concept of the completed Project as a functioning whole as indicated by the Contract Documents. These may be accomplished by a Field Order and will be binding on Owner and also on Contractor, who shall perform the Work involved promptly. If Owner or Contractor believes that a Field Order justifies an adjustment in the Contract Price or Contract Times, or both, and the parties are unable to agree on entitlement to or on the amount or extent, if any, of any such adjustment, a Claim may be made therefor as provided in Paragraph 10.05.

9.05 *Rejecting Defective Work*

A. Engineer will have authority to reject Work which Engineer believes to be defective, or that Engineer believes will not produce a completed Project that conforms to the Contract Documents or that will prejudice the integrity of the design concept of the completed Project as a functioning whole as indicated by the Contract Documents. Engineer will also have authority to require special inspection or testing of the Work as provided in Paragraph 13.04, whether or not the Work is fabricated, installed, or completed.

Copyright © 2007 National Society of Professional Engineers for EJCDC. All rights reserved.

9.06 *Shop Drawings, Change Orders and Payments*

A. In connection with Engineer's authority, and limitations thereof, as to Shop Drawings and Samples, see Paragraph 6.17.

B. In connection with Engineer's authority, and limitations thereof, as to design calculations and design drawings submitted in response to a delegation of professional design services, if any, see Paragraph 6.21.

C. In connection with Engineer's authority as to Change Orders, see Articles 10, 11, and 12.

D. In connection with Engineer's authority as to Applications for Payment, see Article 14.

9.07 *Determinations for Unit Price Work*

A. Engineer will determine the actual quantities and classifications of Unit Price Work performed by Contractor. Engineer will review with Contractor the Engineer's preliminary determinations on such matters before rendering a written decision thereon (by recommendation of an Application for Payment or otherwise). Engineer's written decision thereon will be final and binding (except as modified by Engineer to reflect changed factual conditions or more accurate data) upon Owner and Contractor, subject to the provisions of Paragraph 10.05.

9.08 *Decisions on Requirements of Contract Documents and Acceptability of Work*

A. Engineer will be the initial interpreter of the requirements of the Contract Documents and judge of the acceptability of the Work thereunder. All matters in question and other matters between Owner and Contractor arising prior to the date final payment is due relating to the acceptability of the Work, and the interpretation of the requirements of the Contract Documents pertaining to the performance of the Work, will be referred initially to Engineer in writing within 30 days of the event giving rise to the question.

B. Engineer will, with reasonable promptness, render a written decision on the issue referred. If Owner or Contractor believes that any such decision entitles them to an adjustment in the Contract Price or Contract Times or both, a Claim may be made under Paragraph 10.05. The date of Engineer's decision shall be the date of the event giving rise to the issues referenced for the purposes of Paragraph 10.05.B.

C. Engineer's written decision on the issue referred will be final and binding on Owner and Contractor, subject to the provisions of Paragraph 10.05.

D. When functioning as interpreter and judge under this Paragraph 9.08, Engineer will not show partiality to Owner or Contractor and will not be liable in connection with any interpretation or decision rendered in good faith in such capacity.

9.09 *Limitations on Engineer's Authority and Responsibilities*

A. Neither Engineer's authority or responsibility under this Article 9 or under any other provision of the Contract Documents nor any decision made by Engineer in good faith either to exercise or not exercise such authority or responsibility or the undertaking, exercise, or performance of

Copyright © 2007 National Society of Professional Engineers for EJCDC. All rights reserved.

any authority or responsibility by Engineer shall create, impose, or give rise to any duty in contract, tort, or otherwise owed by Engineer to Contractor, any Subcontractor, any Supplier, any other individual or entity, or to any surety for or employee or agent of any of them.

B. Engineer will not supervise, direct, control, or have authority over or be responsible for Contractor's means, methods, techniques, sequences, or procedures of construction, or the safety precautions and programs incident thereto, or for any failure of Contractor to comply with Laws and Regulations applicable to the performance of the Work. Engineer will not be responsible for Contractor's failure to perform the Work in accordance with the Contract Documents.

C. Engineer will not be responsible for the acts or omissions of Contractor or of any Subcontractor, any Supplier, or of any other individual or entity performing any of the Work.

D. Engineer's review of the final Application for Payment and accompanying documentation and all maintenance and operating instructions, schedules, guarantees, bonds, certificates of inspection, tests and approvals, and other documentation required to be delivered by Paragraph 14.07.A will only be to determine generally that their content complies with the requirements of, and in the case of certificates of inspections, tests, and approvals that the results certified indicate compliance with, the Contract Documents.

E. The limitations upon authority and responsibility set forth in this Paragraph 9.09 shall also apply to the Resident Project Representative, if any, and assistants, if any.

F. Engineer will have no responsibility or authority:

1. To order changes in construction which will result in additional costs or which will require extensions of Contract Times;

2. To suspend all or any portion of Contractor's operations;

3. To terminate all or any portion of the Work;

4. To make final acceptance of all or any portion of the Work; and

5. To operate or maintain any portion of the Work.

9.10 *Compliance with Safety Program*

A. While at the Site, Engineer's employees and representatives shall comply with the specific applicable requirements of Contractor's safety programs of which Engineer has been informed pursuant to Paragraph 6.13.D.

ARTICLE 10 – CHANGES IN THE WORK; CLAIMS

10.01 *Authorized Changes in the Work*

A. Without invalidating the Contract and without notice to any surety, Owner may, at any time or from time to time, order additions, deletions, or revisions in the Work by a Change Order, or a

Copyright © 2007 National Society of Professional Engineers for EJCDC. All rights reserved.

Work Change Directive. Upon receipt of any such document, Contractor shall promptly proceed with the Work involved which will be performed under the applicable conditions of the Contract Documents (except as otherwise specifically provided).

B. If Owner and Contractor are unable to agree on entitlement to, or on the amount or extent, if any, of an adjustment in the Contract Price or Contract Times, or both, that should be allowed as a result of a Work Change Directive, a Claim may be made therefor as provided in Paragraph 10.05.

10.02 *Unauthorized Changes in the Work*

A. Contractor shall not be entitled to an increase in the Contract Price or an extension of the Contract Times with respect to any work performed that is not required by the Contract Documents as amended, modified, or supplemented as provided in Paragraph 3.04, except in the case of an emergency as provided in Paragraph 6.16 or in the case of uncovering Work as provided in Paragraph 13.04.D.

10.03 *Execution of Change Orders*

A. Owner and Contractor shall execute appropriate Change Orders recommended by Engineer covering:

1. changes in the Work which are: (i) ordered by Owner pursuant to Paragraph 10.01.A, (ii) required because of acceptance of defective Work under Paragraph 13.08.A or Owner's correction of defective Work under Paragraph 13.09, or (iii) agreed to by the parties;

2. changes in the Contract Price or Contract Times which are agreed to by the parties, including any undisputed sum or amount of time for Work actually performed in accordance with a Work Change Directive; and

3. changes in the Contract Price or Contract Times which embody the substance of any written decision rendered by Engineer pursuant to Paragraph 10.05; provided that, in lieu of executing any such Change Order, an appeal may be taken from any such decision in accordance with the provisions of the Contract Documents and applicable Laws and Regulations, but during any such appeal, Contractor shall carry on the Work and adhere to the Progress Schedule as provided in Paragraph 6.18.A.

10.04 *Notification to Surety*

A. If the provisions of any bond require notice to be given to a surety of any change affecting the general scope of the Work or the provisions of the Contract Documents (including, but not limited to, Contract Price or Contract Times), the giving of any such notice will be Contractor's responsibility. The amount of each applicable bond will be adjusted to reflect the effect of any such change.

10.05 *Claims*

A. *Engineer's Decision Required*: All Claims, except those waived pursuant to Paragraph 14.09, shall be referred to the Engineer for decision. A decision by Engineer shall be required as a

Copyright © 2007 National Society of Professional Engineers for EJCDC. All rights reserved.

condition precedent to any exercise by Owner or Contractor of any rights or remedies either may otherwise have under the Contract Documents or by Laws and Regulations in respect of such Claims.

B. *Notice:* Written notice stating the general nature of each Claim shall be delivered by the claimant to Engineer and the other party to the Contract promptly (but in no event later than 14 days) after the start of the event giving rise thereto. Failure to comply with this notice requirement shall constitute a waiver of the Claim. The responsibility to substantiate a Claim shall rest with the party making the Claim. Notice of the amount or extent of the Claim, with supporting data shall be delivered to the Engineer and the other party to the Contract within 30 days after the start of such event (unless Engineer allows additional time for claimant to submit additional or more accurate data in support of such Claim). A Claim for an adjustment in Contract Price shall be prepared in accordance with the provisions of Paragraph 12.01.B. A Claim for an adjustment in Contract Times shall be prepared in accordance with the provisions of Paragraph 12.02.B. Each Claim shall be accompanied by claimant's written statement that the adjustment claimed is the entire adjustment to which the claimant believes it is entitled as a result of said event. The opposing party shall submit any response to Engineer and the claimant within 30 days after receipt of the claimant's last submittal (unless Engineer allows additional time).

C. *Engineer's Action*: Engineer will review each Claim and, within 30 days after receipt of the last submittal of the claimant or the last submittal of the opposing party, if any, take one of the following actions in writing:

1. deny the Claim in whole or in part;

2. approve the Claim; or

3. notify the parties that the Engineer is unable to resolve the Claim if, in the Engineer's sole discretion, it would be inappropriate for the Engineer to do so. For purposes of further resolution of the Claim, such notice shall be deemed a denial.

D. In the event that Engineer does not take action on a Claim within said 30 days, the Claim shall be deemed denied.

E. Engineer's written action under Paragraph 10.05.C or denial pursuant to Paragraphs 10.05.C.3 or 10.05.D will be final and binding upon Owner and Contractor, unless Owner or Contractor invoke the dispute resolution procedure set forth in Article 16 within 30 days of such action or denial.

F. No Claim for an adjustment in Contract Price or Contract Times will be valid if not submitted in accordance with this Paragraph 10.05.

G. Contractor shall not have the right to stop performance of the Work pending resolution of a Claim.

Copyright © 2007 National Society of Professional Engineers for EJCDC. All rights reserved.

ARTICLE 11 – COST OF THE WORK; ALLOWANCES; UNIT PRICE WORK

11.01 *Cost of the Work*

A. *Costs Included:* The term Cost of the Work means the sum of all costs, except those excluded in Paragraph 11.01.B, necessarily incurred and paid by Contractor in the proper performance of the Work. When the value of any Work covered by a Change Order or when a Claim for an adjustment in Contract Price is determined on the basis of Cost of the Work, the costs to be reimbursed to Contractor will be only those additional or incremental costs required because of the change in the Work or because of the event giving rise to the Claim. Except as otherwise may be agreed to in writing by Owner, such costs shall be in amounts no higher than those prevailing in the locality of the Project, shall not include any of the costs itemized in Paragraph 11.01.B, and shall include only the following items:

1. Payroll costs for employees in the direct employ of Contractor in the performance of the Work under schedules of job classifications agreed upon by Owner and Contractor. Such employees shall include, without limitation, superintendents, foremen, and other personnel employed full time on the Work. Payroll costs for employees not employed full time on the Work shall be apportioned on the basis of their time spent on the Work. Payroll costs shall include, but not be limited to, salaries and wages plus the cost of fringe benefits, which shall include social security contributions, unemployment, excise, and payroll taxes, workers' compensation, health and retirement benefits, bonuses, sick leave, vacation and holiday pay applicable thereto. The expenses of performing Work outside of regular working hours, on Saturday, Sunday, or legal holidays, shall be included in the above to the extent authorized by Owner.

    a. If applicable, prevailing wage requirements and rates are included in the Additional Supplementary Conditions.

2. Cost of all materials and equipment furnished and incorporated in the Work, including costs of transportation and storage thereof, and Suppliers' field services required in connection therewith. All cash discounts shall accrue to Contractor unless Owner deposits funds with Contractor with which to make payments, in which case the cash discounts shall accrue to Owner. All trade discounts, rebates and refunds and returns from sale of surplus materials and equipment shall accrue to Owner, and Contractor shall make provisions so that they may be obtained.

3. Payments made by Contractor to Subcontractors for Work performed by Subcontractors. If required by Owner, Contractor shall obtain competitive bids from subcontractors acceptable to Owner and Contractor and shall deliver such bids to Owner, who will then determine, with the advice of Engineer, which bids, if any, will be acceptable. If any subcontract provides that the Subcontractor is to be paid on the basis of Cost of the Work plus a fee, the Subcontractor's Cost of the Work and fee shall be determined in the same manner as Contractor's Cost of the Work and fee as provided in this Paragraph 11.01.

4. Costs of special consultants (including but not limited to engineers, architects, testing laboratories, surveyors, attorneys, and accountants) employed for services specifically related to the Work.

Copyright © 2007 National Society of Professional Engineers for EJCDC. All rights reserved.
with Standard Supplementary Conditions prepared by Woodard & Curran on behalf of and are as approved by Owner

5. Supplemental costs including the following:

   a. The proportion of necessary transportation, travel, and subsistence expenses of Contractor's employees incurred in discharge of duties connected with the Work.

   b. Cost, including transportation and maintenance, of all materials, supplies, equipment, machinery, appliances, office, and temporary facilities at the Site, and hand tools not owned by the workers, which are consumed in the performance of the Work, and cost, less market value, of such items used but not consumed which remain the property of Contractor.

   c. Rentals of all construction equipment and machinery, and the parts thereof whether rented from Contractor or others in accordance with rental agreements approved by Owner with the advice of Engineer, and the costs of transportation, loading, unloading, assembly, dismantling, and removal thereof. All such costs shall be in accordance with the terms of said rental agreements. The rental of any such equipment, machinery, or parts shall cease when the use thereof is no longer necessary for the Work.

      1) Rentals of construction equipment and machinery and the parts thereof whether rented from Contractor or others in accordance with rates published in current edition of the Rental Rate Blue Book® for construction equipment published by EquipmentWatch® (www.equipmentwatch.com). When Contractor-owned equipment is ordered by Owner or Engineer to be held at standby, equipment rental rates shall be 50% of normal rate. Rental or standby shall not include time that equipment is inoperative because of malfunction or breakdown and shall cease when the use thereof is no longer necessary for the Work.

   d. Sales, consumer, use, and other similar taxes related to the Work, and for which Contractor is liable, as imposed by Laws and Regulations.

   e. Deposits lost for causes other than negligence of Contractor, any Subcontractor, or anyone directly or indirectly employed by any of them or for whose acts any of them may be liable, and royalty payments and fees for permits and licenses.

   f. Losses and damages (and related expenses) caused by damage to the Work, not compensated by insurance or otherwise, sustained by Contractor in connection with the performance of the Work (except losses and damages within the deductible amounts of property insurance established in accordance with Paragraph 5.06.D), provided such losses and damages have resulted from causes other than the negligence of Contractor, any Subcontractor, or anyone directly or indirectly employed by any of them or for whose acts any of them may be liable. Such losses shall include settlements made with the written consent and approval of Owner. No such losses, damages, and expenses shall be included in the Cost of the Work for the purpose of determining Contractor's fee.

   g. The cost of utilities, fuel, and sanitary facilities at the Site.

Copyright © 2007 National Society of Professional Engineers for EJCDC. All rights reserved.

h. Minor expenses such as telegrams, long distance telephone calls, telephone service at the Site, express and courier services, and similar petty cash items in connection with the Work.

i. The costs of premiums for all bonds and insurance Contractor is required by the Contract Documents to purchase and maintain.

B. *Costs Excluded:* The term Cost of the Work shall not include any of the following items:

1. Payroll costs and other compensation of Contractor's officers, executives, principals (of partnerships and sole proprietorships), general managers, safety managers, engineers, architects, estimators, attorneys, auditors, accountants, purchasing and contracting agents, expediters, timekeepers, clerks, and other personnel employed by Contractor, whether at the Site or in Contractor's principal or branch office for general administration of the Work and not specifically included in the agreed upon schedule of job classifications referred to in Paragraph 11.01.A.1 or specifically covered by Paragraph 11.01.A.4, all of which are to be considered administrative costs covered by the Contractor's fee.

2. Expenses of Contractor's principal and branch offices other than Contractor's office at the Site.

3. Any part of Contractor's capital expenses, including interest on Contractor's capital employed for the Work and charges against Contractor for delinquent payments.

4. Costs due to the negligence of Contractor, any Subcontractor, or anyone directly or indirectly employed by any of them or for whose acts any of them may be liable, including but not limited to, the correction of defective Work, disposal of materials or equipment wrongly supplied, and making good any damage to property.

5. Other overhead or general expense costs of any kind and the costs of any item not specifically and expressly included in Paragraphs 11.01.A.

C. *Contractor's Fee:* When all the Work is performed on the basis of cost-plus, Contractor's fee shall be determined as set forth in the Agreement. When the value of any Work covered by a Change Order or when a Claim for an adjustment in Contract Price is determined on the basis of Cost of the Work, Contractor's fee shall be determined as set forth in Paragraph 12.01.C.

D. *Documentation:* Whenever the Cost of the Work for any purpose is to be determined pursuant to Paragraphs 11.01.A and 11.01.B, Contractor will establish and maintain records thereof in accordance with generally accepted accounting practices and submit in a form acceptable to Engineer an itemized cost breakdown together with supporting data.

11.02 *Allowances*

A. It is understood that Contractor has included in the Contract Price all allowances so named in the Contract Documents and shall cause the Work so covered to be performed for such sums and by such persons or entities as may be acceptable to Owner and Engineer.

B. *Cash Allowances:*

Copyright © 2007 National Society of Professional Engineers for EJCDC. All rights reserved.
with Standard Supplementary Conditions prepared by Woodard & Curran on behalf of and are as approved by Owner

1. Contractor agrees that:

    a. the cash allowances include the cost to Contractor (less any applicable trade discounts) of materials and equipment required by the allowances to be delivered at the Site, and all applicable taxes; and

    b. Contractor's costs for unloading and handling on the Site, labor, installation, overhead, profit, and other expenses contemplated for the cash allowances have been included in the Contract Price and not in the allowances, and no demand for additional payment on account of any of the foregoing will be valid.

C. *Contingency Allowance:*

1. Contractor agrees that a contingency allowance, if any, is for the sole use of Owner to cover unanticipated costs.

D. Prior to final payment, an appropriate Change Order will be issued as recommended by Engineer to reflect actual amounts due Contractor on account of Work covered by allowances, and the Contract Price shall be correspondingly adjusted.

11.03 *Unit Price Work*

A. Where the Contract Documents provide that all or part of the Work is to be Unit Price Work, initially the Contract Price will be deemed to include for all Unit Price Work an amount equal to the sum of the unit price for each separately identified item of Unit Price Work times the estimated quantity of each item as indicated in the Agreement.

B. The estimated quantities of items of Unit Price Work are not guaranteed and are solely for the purpose of comparison of Bids and determining an initial Contract Price. Determinations of the actual quantities and classifications of Unit Price Work performed by Contractor will be made by Engineer subject to the provisions of Paragraph 9.07.

C. Each unit price will be deemed to include an amount considered by Contractor to be adequate to cover Contractor's overhead and profit for each separately identified item.

D. Owner or Contractor may make a Claim for an adjustment in the Contract Price in accordance with Paragraph 10.05 if:

1. the quantity of any item of Unit Price Work performed by Contractor differs by plus or minus 20 percent from the estimated quantity of such item indicated in the Agreement or the Unit Prices for individual items differ by plus or minus 5 percent; and

2. there is no corresponding adjustment with respect to any other item of Work; and

3. Contractor believes that Contractor is entitled to an increase in Contract Price as a result of having incurred additional expense or Owner believes that Owner is entitled to a decrease in Contract Price and the parties are unable to agree as to the amount of any such increase or decrease.

Copyright © 2007 National Society of Professional Engineers for EJCDC. All rights reserved.

ARTICLE 12 – CHANGE OF CONTRACT PRICE; CHANGE OF CONTRACT TIMES

12.01 *Change of Contract Price*

A. The Contract Price may only be changed by a Change Order. Any Claim for an adjustment in the Contract Price shall be based on written notice submitted by the party making the Claim to the Engineer and the other party to the Contract in accordance with the provisions of Paragraph 10.05.

B. The value of any Work covered by a Change Order or of any Claim for an adjustment in the Contract Price will be determined as follows:

1. where the Work involved is covered by unit prices contained in the Contract Documents, by application of such unit prices to the quantities of the items involved (subject to the provisions of Paragraph 11.03); or

2. where the Work involved is not covered by unit prices contained in the Contract Documents, by a mutually agreed lump sum (which may include an allowance for overhead and profit not necessarily in accordance with Paragraph 12.01.C.2); or

3. where the Work involved is not covered by unit prices contained in the Contract Documents and agreement to a lump sum is not reached under Paragraph 12.01.B.2, on the basis of the Cost of the Work (determined as provided in Paragraph 11.01) plus a Contractor's fee for overhead and profit (determined as provided in Paragraph 12.01.C).

C. *Contractor's Fee:* The Contractor's fee for overhead and profit shall be determined as follows:

1. a mutually acceptable fixed fee; or

2. if a fixed fee is not agreed upon, then a fee based on the following percentages of the various portions of the Cost of the Work:

a. for costs incurred under Paragraphs 11.01.A.1 and 11.01.A.2, the Contractor's fee shall be 15 percent;

b. for costs incurred under Paragraph 11.01.A.3, the Contractor's fee shall be five percent;

c. where one or more tiers of subcontracts are on the basis of Cost of the Work plus a fee and no fixed fee is agreed upon, the intent of Paragraphs 12.01.C.2.a and 12.01.C.2.b is that the Subcontractor who actually performs the Work, at whatever tier, will be paid a fee of 15 percent of the costs incurred by such Subcontractor under Paragraphs 11.01.A.1 and 11.01.A.2 and that any higher tier Subcontractor and Contractor will each be paid a fee of five percent of the amount paid to the next lower tier Subcontractor, provided, however, that on any subcontracted work the total maximum fee to be paid by Owner under this subparagraph shall be no greater than 27 percent of the costs incurred by the Subcontractor who actually performs the Work;

Copyright © 2007 National Society of Professional Engineers for EJCDC. All rights reserved.

d. no fee shall be payable on the basis of costs itemized under Paragraphs 11.01.A.4, 11.01.A.5, and 11.01.B;

e. the amount of credit to be allowed by Contractor to Owner for any change which results in a net decrease in cost will be the amount of the actual net decrease in cost plus a deduction in Contractor's fee by an amount equal to five percent of such net decrease; and

f. when both additions and credits are involved in any one change, the adjustment in Contractor's fee shall be computed on the basis of the net change in accordance with Paragraphs 12.01.C.2.a through 12.01.C.2.e, inclusive.

12.02 *Change of Contract Times*

A. The Contract Times may only be changed by a Change Order. Any Claim for an adjustment in the Contract Times shall be based on written notice submitted by the party making the Claim to the Engineer and the other party to the Contract in accordance with the provisions of Paragraph 10.05.

B. Any adjustment of the Contract Times covered by a Change Order or any Claim for an adjustment in the Contract Times will be determined in accordance with the provisions of this Article 12.

12.03 *Delays*

A. Where Contractor is prevented from completing any part of the Work within the Contract Times due to delay beyond the control of Contractor, the Contract Times will be extended in an amount equal to the time lost due to such delay if a Claim is made therefor as provided in Paragraph 12.02.A. Delays beyond the control of Contractor shall include, but not be limited to, acts or neglect by Owner, acts or neglect of utility owners or other contractors performing other work as contemplated by Article 7, fires, floods, epidemics, abnormal weather conditions, acts of war or terrorism, or acts of God (force majeure).

B. If Owner, Engineer, or other contractors or utility owners performing other work for Owner as contemplated by Article 7, or anyone for whom Owner is responsible, delays, disrupts, or interferes with the performance or progress of the Work, then Contractor shall be entitled to an equitable adjustment in the Contract Price or the Contract Times, or both. Contractor's entitlement to an adjustment of the Contract Times is conditioned on such adjustment being essential to Contractor's ability to complete the Work within the Contract Times.

C. If Contractor is delayed in the performance or progress of the Work by fire, flood, epidemic, abnormal weather conditions, acts of war or terrorism, acts of God, acts or failures to act of utility owners not under the control of Owner, or other causes not the fault of and beyond control of Owner and Contractor, then Contractor shall be entitled to an equitable adjustment in Contract Times, if such adjustment is essential to Contractor's ability to complete the Work within the Contract Times. Such an adjustment shall be Contractor's sole and exclusive remedy for the delays described in this Paragraph 12.03.C.

Copyright © 2007 National Society of Professional Engineers for EJCDC. All rights reserved.

D. Owner, Engineer, and their officers, directors, members, partners, employees, agents, consultants, or subcontractors shall not be liable to Contractor for any claims, costs, losses, or damages (including but not limited to all fees and charges of engineers, architects, attorneys, and other professionals and all court or arbitration or other dispute resolution costs) sustained by Contractor on or in connection with any other project or anticipated project.

E. Contractor shall not be entitled to an adjustment in Contract Price or Contract Times for delays within the control of Contractor. Delays attributable to and within the control of a Subcontractor or Supplier shall be deemed to be delays within the control of Contractor.

ARTICLE 13 – TESTS AND INSPECTIONS; CORRECTION, REMOVAL OR ACCEPTANCE OF DEFECTIVE WORK

13.01 *Notice of Defects*

A. Prompt notice of all defective Work of which Owner or Engineer has actual knowledge will be given to Contractor. Defective Work may be rejected, corrected, or accepted as provided in this Article 13.

13.02 *Access to Work*

A. Owner, Engineer, their consultants and other representatives and personnel of Owner, independent testing laboratories, and governmental agencies with jurisdictional interests will have access to the Site and the Work at reasonable times for their observation, inspection, and testing. Contractor shall provide them proper and safe conditions for such access and advise them of Contractor's safety procedures and programs so that they may comply therewith as applicable.

13.03 *Tests and Inspections*

A. Contractor shall give Engineer timely notice of readiness of the Work for all required inspections, tests, or approvals and shall cooperate with inspection and testing personnel to facilitate required inspections or tests.

B. Owner shall employ and pay for the services of an independent testing laboratory to perform all inspections, tests, or approvals required by the Contract Documents except:

1. for inspections, tests, or approvals covered by Paragraphs 13.03.C and 13.03.D below;

2. that costs incurred in connection with tests or inspections conducted pursuant to Paragraph 13.04.B shall be paid as provided in Paragraph 13.04.C; and

3. as otherwise specifically provided in the Contract Documents.

C. If Laws or Regulations of any public body having jurisdiction require any Work (or part thereof) specifically to be inspected, tested, or approved by an employee or other representative of such public body, Contractor shall assume full responsibility for arranging and obtaining such inspections, tests, or approvals, pay all costs in connection therewith, and furnish Engineer the required certificates of inspection or approval.

Copyright © 2007 National Society of Professional Engineers for EJCDC. All rights reserved.
with Standard Supplementary Conditions prepared by Woodard & Curran on behalf of and are as approved by Owner

D. Contractor shall be responsible for arranging and obtaining and shall pay all costs in connection with any inspections, tests, or approvals required for Owner's and Engineer's acceptance of materials or equipment to be incorporated in the Work; or acceptance of materials, mix designs, or equipment submitted for approval prior to Contractor's purchase thereof for incorporation in the Work. Such inspections, tests, or approvals shall be performed by organizations acceptable to Owner and Engineer.

E. If any Work (or the work of others) that is to be inspected, tested, or approved is covered by Contractor without written concurrence of Engineer, Contractor shall, if requested by Engineer, uncover such Work for observation.

F. Uncovering Work as provided in Paragraph 13.03.E shall be at Contractor's expense unless Contractor has given Engineer timely notice of Contractor's intention to cover the same and Engineer has not acted with reasonable promptness in response to such notice.

13.04 *Uncovering Work*

A. If any Work is covered contrary to the written request of Engineer, it must, if requested by Engineer, be uncovered for Engineer's observation and replaced at Contractor's expense.

B. If Engineer considers it necessary or advisable that covered Work be observed by Engineer or inspected or tested by others, Contractor, at Engineer's request, shall uncover, expose, or otherwise make available for observation, inspection, or testing as Engineer may require, that portion of the Work in question, furnishing all necessary labor, material, and equipment.

C. If it is found that the uncovered Work is defective, Contractor shall pay all claims, costs, losses, and damages (including but not limited to all fees and charges of engineers, architects, attorneys, and other professionals and all court or arbitration or other dispute resolution costs) arising out of or relating to such uncovering, exposure, observation, inspection, and testing, and of satisfactory replacement or reconstruction (including but not limited to all costs of repair or replacement of work of others); and Owner shall be entitled to an appropriate decrease in the Contract Price. If the parties are unable to agree as to the amount thereof, Owner may make a Claim therefor as provided in Paragraph 10.05.

D. If the uncovered Work is not found to be defective, Contractor shall be allowed an increase in the Contract Price or an extension of the Contract Times, or both, directly attributable to such uncovering, exposure, observation, inspection, testing, replacement, and reconstruction. If the parties are unable to agree as to the amount or extent thereof, Contractor may make a Claim therefor as provided in Paragraph 10.05.

13.05 *Owner May Stop the Work*

A. If the Work is defective, or Contractor fails to supply sufficient skilled workers or suitable materials or equipment, or fails to perform the Work in such a way that the completed Work will conform to the Contract Documents, Owner may order Contractor to stop the Work, or any portion thereof, until the cause for such order has been eliminated; however, this right of Owner to stop the Work shall not give rise to any duty on the part of Owner to exercise this right for the

Copyright © 2007 National Society of Professional Engineers for EJCDC. All rights reserved.

benefit of Contractor, any Subcontractor, any Supplier, any other individual or entity, or any surety for, or employee or agent of any of them.

13.06 *Correction or Removal of Defective Work*

A. Promptly after receipt of written notice, Contractor shall correct all defective Work, whether or not fabricated, installed, or completed, or, if the Work has been rejected by Engineer, remove it from the Project and replace it with Work that is not defective. Contractor shall pay all claims, costs, losses, and damages (including but not limited to all fees and charges of engineers, architects, attorneys, and other professionals and all court or arbitration or other dispute resolution costs) arising out of or relating to such correction or removal (including but not limited to all costs of repair or replacement of work of others).

B. When correcting defective Work under the terms of this Paragraph 13.06 or Paragraph 13.07, Contractor shall take no action that would void or otherwise impair Owner's special warranty and guarantee, if any, on said Work.

13.07 *Correction Period*

A. If within one year after the date of Substantial Completion (or such longer period of time as may be prescribed by the terms of any applicable special guarantee required by the Contract Documents) or by any specific provision of the Contract Documents (such as partial utilization in Paragraph 14.05), any Work is found to be defective, or if the repair of any damages to the land or areas made available for Contractor's use by Owner or permitted by Laws and Regulations as contemplated in Paragraph 6.11.A is found to be defective, Contractor shall promptly, without cost to Owner and in accordance with Owner's written instructions:

1. repair such defective land or areas; or

2. correct such defective Work; or

3. if the defective Work has been rejected by Owner, remove it from the Project and replace it with Work that is not defective, and

4. satisfactorily correct or repair or remove and replace any damage to other Work, to the work of others or other land or areas resulting therefrom.

B. If Contractor does not promptly comply with the terms of Owner's written instructions, or in an emergency where delay would cause serious risk of loss or damage, Owner may have the defective Work corrected or repaired or may have the rejected Work removed and replaced. All claims, costs, losses, and damages (including but not limited to all fees and charges of engineers, architects, attorneys, and other professionals and all court or arbitration or other dispute resolution costs) arising out of or relating to such correction or repair or such removal and replacement (including but not limited to all costs of repair or replacement of work of others) will be paid by Contractor and may be deducted from amounts otherwise due the Contractor.

Copyright © 2007 National Society of Professional Engineers for EJCDC. All rights reserved.
with Standard Supplementary Conditions prepared by Woodard & Curran on behalf of and are as approved by Owner

C. In special circumstances where a particular item of equipment is placed in continuous service before Substantial Completion of all the Work, the correction period for that item may start to run from an earlier date if so provided in the Specifications.

D. Where defective Work, including materials, equipment and supplies or as defined in manufacturers' and Suppliers' warranties (and damage to other Work resulting therefrom) has been corrected or removed and replaced under this Paragraph 13.07, the correction period hereunder with respect to such Work will be extended for an additional period of one year after such correction or removal and replacement has been satisfactorily completed and the terms of this Paragraph 13.07 will continue to apply.

E. Contractor's obligations under this Paragraph 13.07 are in addition to any other obligation or warranty. The provisions of this Paragraph 13.07 shall not be construed as a substitute for, or a waiver of, the provisions of any applicable statute of limitation or repose.

13.08 *Acceptance of Defective Work*

A. If, instead of requiring correction or removal and replacement of defective Work, Owner (and, prior to Engineer's recommendation of final payment, Engineer) prefers to accept it, Owner may do so. Contractor shall pay all claims, costs, losses, and damages (including but not limited to all fees and charges of engineers, architects, attorneys, and other professionals and all court or arbitration or other dispute resolution costs) attributable to Owner's evaluation of and determination to accept such defective Work (such costs to be approved by Engineer as to reasonableness) and for the diminished value of the Work to the extent not otherwise paid by Contractor pursuant to this sentence. If any such acceptance occurs prior to Engineer's recommendation of final payment, a Change Order will be issued incorporating the necessary revisions in the Contract Documents with respect to the Work, and Owner shall be entitled to an appropriate decrease in the Contract Price, reflecting the diminished value of Work so accepted. If the parties are unable to agree as to the amount thereof, Owner may make a Claim therefor as provided in Paragraph 10.05. If the acceptance occurs after such recommendation, an appropriate amount will be paid by Contractor to Owner.

13.09 *Owner May Correct Defective Work*

A. If Contractor fails within a reasonable time after written notice from Engineer to correct defective Work, or to remove and replace rejected Work as required by Engineer in accordance with Paragraph 13.06.A, or if Contractor fails to perform the Work in accordance with the Contract Documents, or if Contractor fails to comply with any other provision of the Contract Documents, Owner may, after seven days written notice to Contractor, or immediately in the case of an emergency, correct, or remedy any such deficiency.

B. In exercising the rights and remedies under this Paragraph 13.09, Owner shall proceed expeditiously. In connection with such corrective or remedial action, Owner may exclude Contractor from all or part of the Site, take possession of all or part of the Work and suspend Contractor's services related thereto, take possession of Contractor's tools, appliances, construction equipment and machinery at the Site, and incorporate in the Work all materials and equipment stored at the Site or for which Owner has paid Contractor but which are stored elsewhere. Contractor shall allow Owner, Owner's representatives, agents and employees,

Copyright © 2007 National Society of Professional Engineers for EJCDC. All rights reserved.

Owner's other contractors, and Engineer and Engineer's consultants access to the Site to enable Owner to exercise the rights and remedies under this Paragraph.

C. All claims, costs, losses, and damages (including but not limited to all fees and charges of engineers, architects, attorneys, and other professionals and all court or arbitration or other dispute resolution costs) incurred or sustained by Owner in exercising the rights and remedies under this Paragraph 13.09 will be charged against Contractor, and a Change Order will be issued incorporating the necessary revisions in the Contract Documents with respect to the Work; and Owner shall be entitled to an appropriate decrease in the Contract Price. If the parties are unable to agree as to the amount of the adjustment, Owner may make a Claim therefor as provided in Paragraph 10.05. Such claims, costs, losses and damages will include but not be limited to all costs of repair, or replacement of work of others destroyed or damaged by correction, removal, or replacement of Contractor's defective Work.

D. Contractor shall not be allowed an extension of the Contract Times because of any delay in the performance of the Work attributable to the exercise by Owner of Owner's rights and remedies under this Paragraph 13.09.

ARTICLE 14 – PAYMENTS TO CONTRACTOR AND COMPLETION

14.01 *Schedule of Values*

A. The Schedule of Values established as provided in Paragraph 2.07.A will serve as the basis for progress payments and will be incorporated into a form of Application for Payment acceptable to Engineer. Progress payments on account of Unit Price Work will be based on the number of units completed.

14.02 *Progress Payments*

A. *Applications for Payments:*

1. At least 20 days before the date established in the Agreement for each progress payment (but not more often than once a month), Contractor shall submit to Engineer for review an Application for Payment filled out and signed by Contractor covering the Work completed as of the date of the Application and accompanied by such supporting documentation as is required by the Contract Documents. If payment is requested on the basis of materials and equipment not incorporated in the Work but delivered and suitably stored at the Site or at another location agreed to in writing, the Application for Payment shall also be accompanied by a bill of sale, invoice, or other documentation warranting that Owner has received the materials and equipment free and clear of all Liens and evidence that the materials and equipment are covered by appropriate property insurance or other arrangements to protect Owner's interest therein, all of which must be satisfactory to Owner.

2. Beginning with the second Application for Payment, each Application shall include an affidavit of Contractor stating that all previous progress payments received on account of the Work have been applied on account to discharge Contractor's legitimate obligations associated with prior Applications for Payment.

Copyright © 2007 National Society of Professional Engineers for EJCDC. All rights reserved.

3. The amount of retainage with respect to progress payments will be as stipulated in the Agreement.

B. *Review of Applications:*

1. Engineer will, within 10 days after receipt of each Application for Payment, either indicate in writing a recommendation of payment and present the Application to Owner or return the Application to Contractor indicating in writing Engineer's reasons for refusing to recommend payment. In the latter case, Contractor may make the necessary corrections and resubmit the Application.

2. Engineer's recommendation of any payment requested in an Application for Payment will constitute a representation by Engineer to Owner, based on Engineer's observations of the executed Work as an experienced and qualified design professional, and on Engineer's review of the Application for Payment and the accompanying data and schedules, that to the best of Engineer's knowledge, information and belief:

   a. the Work has progressed to the point indicated;

   b. the quality of the Work is generally in accordance with the Contract Documents (subject to an evaluation of the Work as a functioning whole prior to or upon Substantial Completion, the results of any subsequent tests called for in the Contract Documents, a final determination of quantities and classifications for Unit Price Work under Paragraph 9.07, and any other qualifications stated in the recommendation); and

   c. the conditions precedent to Contractor's being entitled to such payment appear to have been fulfilled in so far as it is Engineer's responsibility to observe the Work.

3. By recommending any such payment Engineer will not thereby be deemed to have represented that:

   a. inspections made to check the quality or the quantity of the Work as it has been performed have been exhaustive, extended to every aspect of the Work in progress, or involved detailed inspections of the Work beyond the responsibilities specifically assigned to Engineer in the Contract Documents; or

   b. there may not be other matters or issues between the parties that might entitle Contractor to be paid additionally by Owner or entitle Owner to withhold payment to Contractor.

4. Neither Engineer's review of Contractor's Work for the purposes of recommending payments nor Engineer's recommendation of any payment, including final payment, will impose responsibility on Engineer:

   a. to supervise, direct, or control the Work, or

   b. for the means, methods, techniques, sequences, or procedures of construction, or the safety precautions and programs incident thereto, or

Copyright © 2007 National Society of Professional Engineers for EJCDC. All rights reserved.

c. for Contractor's failure to comply with Laws and Regulations applicable to Contractor's performance of the Work, or

d. to make any examination to ascertain how or for what purposes Contractor has used the moneys paid on account of the Contract Price, or

e. to determine that title to any of the Work, materials, or equipment has passed to Owner free and clear of any Liens.

5. Engineer may refuse to recommend the whole or any part of any payment if, in Engineer's opinion, it would be incorrect to make the representations to Owner stated in Paragraph 14.02.B.2. Engineer may also refuse to recommend any such payment or, because of subsequently discovered evidence or the results of subsequent inspections or tests, revise or revoke any such payment recommendation previously made, to such extent as may be necessary in Engineer's opinion to protect Owner from loss because:

a. the Work is defective, or completed Work has been damaged, requiring correction or replacement;

b. the Contract Price has been reduced by Change Orders;

c. Owner has been required to correct defective Work or complete Work in accordance with Paragraph 13.09; or

d. Engineer has actual knowledge of the occurrence of any of the events enumerated in Paragraph 15.02.A.

C. *Payment Becomes Due:*

1. Ten days after presentation of the Application for Payment to Owner with Engineer's recommendation, the amount recommended will (subject to the provisions of Paragraph 14.02.D) become due, and when due will be paid by Owner to Contractor.

D. *Reduction in Payment:*

1. Owner may refuse to make payment of the full amount recommended by Engineer because:

a. claims have been made against Owner on account of Contractor's performance or furnishing of the Work;

b. Liens have been filed in connection with the Work, except where Contractor has delivered a specific bond satisfactory to Owner to secure the satisfaction and discharge of such Liens and provides an indemnity satisfactory to Owner for all claims, costs, losses and damages arising out of such Liens;

c. there are other items entitling Owner to a set-off against the amount recommended including liability for liquidated damages and correction of defective work by Owner or others; or

Copyright © 2007 National Society of Professional Engineers for EJCDC. All rights reserved.

d. Owner has actual knowledge of the occurrence of any of the events enumerated in Paragraphs 14.02.B.5.a through 14.02.B.5.c or Paragraph 15.02.A.

2. If Owner refuses to make payment of the full amount recommended by Engineer, Owner will give Contractor immediate written notice (with a copy to Engineer) stating the reasons for such action and promptly pay Contractor any amount remaining after deduction of the amount so withheld. Owner shall promptly pay Contractor the amount so withheld, or any adjustment thereto agreed to by Owner and Contractor, when Contractor remedies the reasons for such action.

3. Upon a subsequent determination that Owner's refusal of payment was not justified, the amount wrongfully withheld shall be treated as an amount due as determined by Paragraph 14.02.C.1 and subject to interest as provided in the Agreement.

14.03 *Contractor's Warranty of Title*

A. Contractor warrants and guarantees that title to all Work, materials, and equipment covered by any Application for Payment, whether incorporated in the Project or not, will pass to Owner no later than the time of payment free and clear of all Liens.

14.04 *Substantial Completion*

A. When Contractor considers the entire Work ready for its intended use and final testing has been completed in accordance with the General Requirements, Contractor shall notify Owner and Engineer in writing that the entire Work is substantially complete (except for items specifically listed by Contractor as incomplete) using the Notice of Substantial Completion form included in the Contract Documents and request that Engineer issue a certificate of Substantial Completion.

B. Promptly after Contractor's notification, Owner, Contractor, and Engineer shall make an inspection of the Work to determine the status of completion. If Engineer does not consider the Work substantially complete, Engineer will notify Contractor in writing giving the reasons therefor.

C. If Engineer considers the Work substantially complete, Engineer will deliver to Owner a tentative certificate of Substantial Completion which shall fix the date of Substantial Completion using the Certificate of Substantial Completion included in the Contract Documents. There shall be attached to the certificate a tentative list of items to be completed or corrected before final payment. Owner shall have seven days after receipt of the tentative certificate during which to make written objection to Engineer as to any provisions of the certificate or attached list. If, after considering such objections, Engineer concludes that the Work is not substantially complete, Engineer will, within 14 days after submission of the tentative certificate to Owner, notify Contractor in writing, stating the reasons therefor. If, after consideration of Owner's objections, Engineer considers the Work substantially complete, Engineer will, within said 14 days, execute and deliver to Owner and Contractor a definitive certificate of Substantial Completion (with a revised tentative list of items to be completed or corrected) reflecting such changes from the tentative certificate as Engineer believes justified after consideration of any objections from Owner.

Copyright © 2007 National Society of Professional Engineers for EJCDC. All rights reserved.

D. At the time of delivery of the tentative certificate of Substantial Completion, Engineer will deliver to Owner and Contractor a written recommendation as to division of responsibilities pending final payment between Owner and Contractor with respect to security, operation, safety, and protection of the Work, maintenance, heat, utilities, insurance, and warranties and guarantees. Unless Owner and Contractor agree otherwise in writing and so inform Engineer in writing prior to Engineer's issuing the definitive certificate of Substantial Completion, Engineer's aforesaid recommendation will be binding on Owner and Contractor until final payment.

E. Owner shall have the right to exclude Contractor from the Site after the date of Substantial Completion subject to allowing Contractor reasonable access to remove its property and complete or correct items on the tentative list.

14.05 *Partial Utilization*

A. Prior to Substantial Completion of all the Work, Owner may use or occupy any substantially completed part of the Work which has specifically been identified in the Contract Documents, or which Owner, Engineer, and Contractor agree constitutes a separately functioning and usable part of the Work that can be used by Owner for its intended purpose without significant interference with Contractor's performance of the remainder of the Work, subject to the following conditions:

1. Owner at any time may request Contractor in writing to permit Owner to use or occupy any such part of the Work which Owner believes to be ready for its intended use and substantially complete. If and when Contractor agrees that such part of the Work is substantially complete, Contractor, Owner, and Engineer will follow the procedures of Paragraph 14.04.A through D for that part of the Work.

2. Contractor at any time may notify Owner and Engineer in writing that Contractor considers any such part of the Work ready for its intended use and substantially complete and request Engineer to issue a certificate of Substantial Completion for that part of the Work.

3. Within a reasonable time after either such request, Owner, Contractor, and Engineer shall make an inspection of that part of the Work to determine its status of completion. If Engineer does not consider that part of the Work to be substantially complete, Engineer will notify Owner and Contractor in writing giving the reasons therefor. If Engineer considers that part of the Work to be substantially complete, the provisions of Paragraph 14.04 will apply with respect to certification of Substantial Completion of that part of the Work and the division of responsibility in respect thereof and access thereto.

4. No use or occupancy or separate operation of part of the Work may occur prior to compliance with the requirements of Paragraph 5.10 regarding property insurance.

B. Owner may request in writing that Contractor permit Owner to separately operate any part of the Work although it is not substantially complete subject to the following conditions.

1. A copy of such request will be sent to Engineer and, within a reasonable time thereafter, Owner, Contractor and Engineer shall make an inspection of that part of the Work not

Copyright © 2007 National Society of Professional Engineers for EJCDC. All rights reserved.

substantially complete to determine the status of completion and will prepare a Punch List before final payment.

2. If Contractor does not indicate in writing to Owner and Engineer that such part of the Work is not ready for separate operation by Owner, Engineer will finalize the Punch List and will deliver such list to Owner and Contractor, together with a written recommendation as to the division of responsibilities between Owner and Contractor with respect to security, operation, safety, maintenance, utilities, insurance, warranties and guarantees for that part of the Work pending final payment.

3. The Engineer's recommendation and Punch List will become binding upon Owner and Contractor at the time the Owner takes over and separately operates such part of the Work unless otherwise agreed in writing and so informed Engineer.

4. During such separate operation by Owner and prior to Substantial Completion of such part of the Work, Owner shall allow Contractor reasonable access to complete or correct Punch List and to complete other related Work.

14.06 *Final Inspection*

A. Upon written notice from Contractor that the entire Work or an agreed portion thereof is complete, Engineer will promptly make a final inspection with Owner and Contractor and will notify Contractor in writing of all particulars in which this inspection reveals that the Work is incomplete or defective. Contractor shall immediately take such measures as are necessary to complete such Work or remedy such deficiencies.

14.07 *Final Payment*

A. *Application for Payment:*

1. After Contractor has, in the opinion of Engineer, satisfactorily completed all corrections identified during the final inspection and has delivered, in accordance with the Contract Documents, all maintenance and operating instructions, schedules, guarantees, warranties, bonds, certificates or other evidence of insurance, certificates of inspection, marked-up record documents (as provided in Paragraph 6.12), and other documents, and Engineer has indicated that the Work is acceptable (subject to the provisions of Paragraph 14.09), Contractor may make application for final payment following the procedure for progress payments.

2. The final Application for Payment shall be accompanied (except as previously delivered) by:

a. all documentation called for in the Contract Documents, including but not limited to the evidence of insurance required by Paragraph 5.04.B.6;

b. consent of the surety, if any, to final payment;

c. a list of all Claims against Owner that Contractor believes are unsettled; and

Copyright © 2007 National Society of Professional Engineers for EJCDC. All rights reserved.

d. complete and legally effective releases or waivers (satisfactory to Owner) of all Lien rights arising out of or Liens filed in connection with the Work.

3. In lieu of the releases or waivers of Liens specified in Paragraph 14.07.A.2 and as approved by Owner, Contractor may furnish receipts or releases in full and an affidavit of Contractor that: (i) the releases and receipts include all labor, services, material, and equipment for which a Lien could be filed; and (ii) all payrolls, material and equipment bills, and other indebtedness connected with the Work for which Owner might in any way be responsible, or which might in any way result in liens or other burdens on Owner's property, have been paid or otherwise satisfied. If any Subcontractor or Supplier fails to furnish such a release or receipt in full, Contractor may furnish a bond or other collateral satisfactory to Owner to indemnify Owner against any Lien.

B. *Engineer's Review of Application and Acceptance:*

1. If, on the basis of Engineer's observation of the Work during construction and final inspection, and Engineer's review of the final Application for Payment and accompanying documentation as required by the Contract Documents, Engineer is satisfied that the Work has been completed and Contractor's other obligations under the Contract Documents have been fulfilled, Engineer will, within ten days after receipt of the final Application for Payment, indicate in writing Engineer's recommendation of payment and present the Application for Payment to Owner for payment. At the same time Engineer will also give written notice to Owner and Contractor that the Work is acceptable using the Certificate of Completion form included in the Contract Documents, subject to the provisions of Paragraph 14.09. Otherwise, Engineer will return the Application for Payment to Contractor, indicating in writing the reasons for refusing to recommend final payment, in which case Contractor shall make the necessary corrections and resubmit the Application for Payment.

C. *Payment Becomes Due:*

1. Thirty days after the presentation to Owner of the Application for Payment and accompanying documentation, the amount recommended by Engineer, less any sum Owner is entitled to set off against Engineer's recommendation, including but not limited to liquidated damages, will become due and will be paid by Owner to Contractor.

14.08 *Final Completion Delayed*

A. If, through no fault of Contractor, final completion of the Work is significantly delayed, and if Engineer so confirms, Owner shall, upon receipt of Contractor's final Application for Payment (for Work fully completed and accepted) and recommendation of Engineer, and without terminating the Contract, make payment of the balance due for that portion of the Work fully completed and accepted as detailed on the Certificate of Completion. If the remaining balance to be held by Owner for Work not fully completed or corrected is less than the retainage stipulated in the Agreement, and if bonds have been furnished as required in Paragraph 5.01, the written consent of the surety to the payment of the balance due for that portion of the Work fully completed and accepted shall be submitted by Contractor to Engineer with the Application

Copyright © 2007 National Society of Professional Engineers for EJCDC. All rights reserved.

for such payment. Such payment shall be made under the terms and conditions governing final payment, except that it shall not constitute a waiver of Claims.

14.09 *Waiver of Claims*

A. The making and acceptance of final payment will constitute:

1. a waiver of all Claims by Owner against Contractor, except Claims arising from unsettled Liens, from defective Work appearing after final inspection pursuant to Paragraph 14.06, from failure to comply with the Contract Documents or the terms of any special guarantees specified therein, or from Contractor's continuing obligations under the Contract Documents; and

2. a waiver of all Claims by Contractor against Owner other than those previously made in accordance with the requirements herein and expressly acknowledged by Owner in writing as still unsettled.

ARTICLE 15 – SUSPENSION OF WORK AND TERMINATION

15.01 *Owner May Suspend Work*

A. At any time and without cause, Owner may suspend the Work or any portion thereof for a period of not more than 90 consecutive days by notice in writing to Contractor and Engineer which will fix the date on which Work will be resumed. Contractor shall resume the Work on the date so fixed. Contractor shall be granted an adjustment in the Contract Price or an extension of the Contract Times, or both, directly attributable to any such suspension if Contractor makes a Claim therefor as provided in Paragraph 10.05.

B. If the performance of all or any part of the Work is suspended, delayed, or interrupted due to an order of a court of competent jurisdiction as a result of environmental litigation, as defined below, the Owner, at the request of the Contractor, shall determine whether the order is due in any part to the acts or omissions of the Contractor or a Subcontractor at any tier not required by the terms of this Contract. If it is determined that the order is not due in any part to acts or omissions of the Contractor or a Subcontractor at any tier other than as required by the terms of this Contract, such suspension, delay, or interruption shall be considered as if ordered by the Owner in the administration of this Contract under the terms of Article 15 except that it will not be possible for the Owner to fix the date for resumption of the Work.

1. The term "environmental litigation", as used herein, means a claim or lawsuit alleging that the Work has or will have an adverse effect on the environment or that the Owner has not duly considered, either substantively or procedurally, the effect of the Work on the environment.

15.02 *Owner May Terminate for Cause*

A. The occurrence of any one or more of the following events will justify termination for cause:

1. Contractor's failure to perform the Work in accordance with the Contract Documents (including, but not limited to, failure to supply sufficient skilled workers or suitable

Copyright © 2007 National Society of Professional Engineers for EJCDC. All rights reserved.

materials or equipment or failure to adhere to the Progress Schedule established under Paragraph 2.07 as adjusted from time to time pursuant to Paragraph 6.04);

2. Contractor's disregard of Laws or Regulations of any public body having jurisdiction;

3. Contractor's repeated disregard of the authority of Engineer; or

4. Contractor's violation in any substantial way of any provisions of the Contract Documents; or

5. Contractor commences a voluntary case under any chapter of the Bankruptcy Code (Title 11, United States Code), as now or hereafter in effect, or if Contractor takes any equivalent or similar action by filing a petition or otherwise under any Laws and Regulations in effect at such time relating to the bankruptcy or insolvency; or

6. a petition is filed against Contractor under any chapter of the Bankruptcy Code as now or hereafter in effect at the time of filing, or if a petition is filed seeking any such equivalent or similar relief against Contractor under any Laws and Regulations in effect at the time relating to bankruptcy or insolvency; or

7. Contractor makes a general assignment for the benefit of creditors; or

8. a trustee, receiver, custodian or agent of Contractor is appointed under applicable law or under contract, whose appointment or authority to take charge of property of Contractor is for the purpose of enforcing a Lien against such property or for the purpose of general administration of such property for the benefit of Contractor's creditors; or

9. Contractor admits in writing its inability to pay its debts generally as they become due.

B. If one or more of the events identified in Paragraph 15.02.A occur, Owner may, after giving Contractor (and surety) seven days written notice of its intent to terminate the services of Contractor:

1. exclude Contractor from the Site, and take possession of the Work and of all Contractor's tools, appliances, construction equipment, and machinery at the Site, and use the same to the full extent they could be used by Contractor (without liability to Contractor for trespass or conversion);

2. incorporate in the Work all materials and equipment stored at the Site or for which Owner has paid Contractor but which are stored elsewhere; and

3. complete the Work as Owner may deem expedient.

C. If Owner proceeds as provided in Paragraph 15.02.B, Contractor shall not be entitled to receive any further payment until the Work is completed. If the unpaid balance of the Contract Price exceeds all claims, costs, losses, and damages (including but not limited to all fees and charges of engineers, architects, attorneys, and other professionals and all court or arbitration or other dispute resolution costs) sustained by Owner arising out of or relating to completing the Work, such excess will be paid to Contractor. If such claims, costs, losses, and damages exceed such

Copyright © 2007 National Society of Professional Engineers for EJCDC. All rights reserved.

unpaid balance, Contractor shall pay the difference to Owner. Such claims, costs, losses, and damages incurred by Owner will be reviewed by Engineer as to their reasonableness and, when so approved by Engineer, incorporated in a Change Order. When exercising any rights or remedies under this Paragraph, Owner shall not be required to obtain the lowest price for the Work performed.

D. Notwithstanding Paragraphs 15.02.B and 15.02.C, Contractor's services will not be terminated if Contractor begins within seven days of receipt of notice of intent to terminate to correct its failure to perform and proceeds diligently to cure such failure within no more than 30 days of receipt of said notice.

E. Where Contractor's services have been so terminated by Owner, the termination will not affect any rights or remedies of Owner against Contractor then existing or which may thereafter accrue. Any retention or payment of moneys due Contractor by Owner will not release Contractor from liability.

F. If and to the extent that Contractor has provided a performance bond under the provisions of Paragraph 5.01.A, the termination procedures of that bond shall supersede the provisions of Paragraphs 15.02.B and 15.02.C.

15.03 *Owner May Terminate For Convenience*

A. Upon seven days written notice to Contractor and Engineer, Owner may, without cause and without prejudice to any other right or remedy of Owner, terminate the Contract. In such case, Contractor shall be paid for (without duplication of any items):

1. completed and acceptable Work executed in accordance with the Contract Documents prior to the effective date of termination, including fair and reasonable sums for overhead and profit on such Work;

2. expenses sustained prior to the effective date of termination in performing services and furnishing labor, materials, or equipment as required by the Contract Documents in connection with uncompleted Work, plus fair and reasonable sums for overhead and profit on such expenses;

3. reasonable claims, costs, losses, and damages (including but not limited to reasonable fees and charges of engineers, architects, attorneys, and other professionals and reasonable court or arbitration or other dispute resolution costs) incurred in settlement of terminated contracts with Subcontractors, Suppliers, and others; and

4. reasonable expenses directly attributable to termination.

B. Contractor shall not be paid on account of loss of anticipated profits or revenue or other economic loss arising out of or resulting from such termination.

15.04 *Contractor May Stop Work or Terminate*

A. If, through no act or fault of Contractor, (i) the Work is suspended for more than 90 consecutive days by Owner or under an order of court or other public authority, or (ii) Engineer fails to act

Copyright © 2007 National Society of Professional Engineers for EJCDC. All rights reserved.
with Standard Supplementary Conditions prepared by Woodard & Curran on behalf of and are as approved by Owner

on any Application for Payment within 30 days after it is submitted, or (iii) Owner fails for 30 days to pay Contractor any sum finally determined to be due, then Contractor may, upon seven days written notice to Owner and Engineer, and provided Owner or Engineer do not remedy such suspension or failure within that time, terminate the Contract and recover from Owner payment on the same terms as provided in Paragraph 15.03.

B. In lieu of terminating the Contract and without prejudice to any other right or remedy, if Engineer has failed to act on an Application for Payment within 30 days after it is submitted, or Owner has failed for 30 days to pay Contractor any sum finally determined to be due, Contractor may, seven days after written notice to Owner and Engineer, stop the Work until payment is made of all such amounts due Contractor, including interest thereon. The provisions of this Paragraph 15.04 are not intended to preclude Contractor from making a Claim under Paragraph 10.05 for an adjustment in Contract Price or Contract Times or otherwise for expenses or damage directly attributable to Contractor's stopping the Work as permitted by this Paragraph.

ARTICLE 16 – DISPUTE RESOLUTION

16.01 *Methods and Procedures*

A. Subject to the requirements in Paragraph 10.05, Owner and Contractor agree that they will submit any and all unsettled Claims, counterclaims, disputes and other matters in question between them arising out of or relating to the Contract Documents ("disputes"), to mediation by senior management representatives of each party for a period of 5 days. If resolution is not achieved, then the dispute shall be submitted to formal mediation prior to either of them initiating against the other, a demand for arbitration pursuant to Paragraph 16.02, unless delay in initiating arbitration would irrevocably prejudice one of the Parties. Any time limits within which to file a demand for arbitration shall be suspended with respect to a dispute submitted to mediation within those same applicable time limits and shall remain suspended until 10 days after the termination of the mediation. The mediator of any dispute submitted to mediation shall not serve as arbitrator of such dispute unless otherwise agreed.

B. Subject to Paragraph 16.01.A, either Owner or Contractor may request formal mediation of any Claim submitted to Engineer for a decision under Paragraph 10.05 before such decision becomes final and binding. The mediation will be governed by the Construction Industry Mediation Rules of the American Arbitration Association in effect as of the Effective Date of the Agreement. The request for mediation shall be submitted in writing to the American Arbitration Association and the other party to the Contract. Timely submission of the request shall stay the effect of Paragraph 10.05.E.

C. Owner and Contractor shall participate in the mediation process in good faith. The process shall be concluded within 60 days of filing of the request. The date of termination of the mediation shall be determined by application of the mediation rules referenced above.

D. If the Claim is not resolved by senior management mediation or formal mediation, Engineer's action under Paragraph 10.05.C or a denial pursuant to Paragraphs 10.05.C.3 or 10.05.D shall become final and binding 30 days after termination of the mediation unless, within that time period, Owner or Contractor:

Copyright © 2007 National Society of Professional Engineers for EJCDC. All rights reserved.

1. elects in writing to invoke the dispute resolution process pursuant to Paragraph 16.02; or

2. agrees with the other party to submit the Claim to another dispute resolution process.

3.

16.02 *Arbitration*

A. All Claims or counterclaims, disputes, or other matters in question between Owner and Contractor arising out of or relating to the Contract Documents or the breach thereof (except for Claims which have been waived by the making or acceptance of final payment as provided by Paragraph 14.09) including but not limited to those not resolved under the provisions of Paragraphs 10.05 or 16.01, will be subject to arbitration in accordance with the rules of Construction Industry Rules of the American Arbitration Association, subject to the conditions and limitations of this Paragraph 16.02. This agreement to arbitrate, and any other agreement or consent to arbitrate entered into, will be specifically enforceable under the prevailing Laws of any court having jurisdiction.

B. The demand for arbitration will be filed in writing with the other party to this Contract and with the selected arbitrator or arbitration provider, and a copy will be sent to Engineer for information. The demand for arbitration will be made within the 30 day period specified in Paragraph 16.01.D, and in all other cases, within a reasonable time after the Claim or counterclaim, dispute, or other matter in question has arisen, and in no event shall any such demand be made after the date when institution of legal or equitable proceedings based on such Claim or other dispute or matter in question would be barred by the applicable statute of limitations.

C. No arbitration arising out of or relating to the Contract Documents shall include by consolidation, joinder, or in any other manner any other individual or entity (including Engineer, and Engineer's consultants and the officers, directors, partners, agents, employees or consultants of any of them) who is not a party to this Contract unless:

1. the inclusion of such other individual or entity is necessary if complete relief is to be afforded among those who are already parties to the arbitration; and

2. such other individual or entity is substantially involved in a question of law or fact which is common to those who are already parties to the arbitration and which will arise in such proceedings.

D. Consolidation shall be by order of the arbitrator(s) in any pending case, or if the arbitrator(s) fail to make an order, a party may apply to a court of competent jurisdiction for such order. The foregoing agreement to arbitrate and other agreements to arbitrate with an additional person or entity shall be specifically enforceable in accordance with the Laws of any court having jurisdiction thereof.

E. The award rendered by the arbitrator(s) shall be consistent with the agreement of the parties, in writing, and include: (i) a concise breakdown of the award; (ii) a written explanation of the

Copyright © 2007 National Society of Professional Engineers for EJCDC. All rights reserved.

award specifically citing the Contract Document provisions deemed applicable and relied on in making the award.

F. The award will be final. Judgment may be entered upon it in any court having jurisdiction thereof, and it will not be subject to modification or appeal, subject to provisions of the controlling Laws relating to vacating or modifying an arbitral award.

G. If the parties decline to arbitrate, such Claims, disputes and other matters shall be decided by a court having jurisdiction.

16.03 *General*

A. The Contractor will require similar arbitration provisions in agreements with its Subcontractors and Suppliers.

B. Contractor shall not have the right to stop performance of the Work pending resolution of a Claim or dispute.

C. Notwithstanding any provision contained in this Article or elsewhere in the Contract Documents, the Owner reserves the following rights in connection with Claims and disputes between the Owner and the Contractor:

1. The right to institute legal action against the Contractor in any court of competent jurisdiction in lieu of demanding arbitration pursuant to this Article, in which case the Claims or disputes which are the subject of such action shall be decided by such court, and not by arbitration.

2. The right to obtain from any court of competent jurisdiction a stay of any arbitration instituted by the Contractor, provided that the application for such stay is made before the appointment of the neutral arbitrator in such arbitration, in which case the Claims or disputes which are the subject of such arbitration shall be decided by such court, and not by arbitration.

3. The right to require the Contractor to join as a party in any arbitration between the Owner and the Engineer relating to the Project, in which case the Contractor agrees to be bound by the decision of the arbitrator or arbitrators in such arbitration.

ARTICLE 17 – MISCELLANEOUS

17.01 *Giving Notice*

A. Whenever any provision of the Contract Documents requires the giving of written notice, it will be deemed to have been validly given if:

1. delivered in person to the individual or to a member of the firm or to an officer of the corporation for whom it is intended; or

2. delivered at or sent by registered or certified mail, postage prepaid, to the last business address known to the giver of the notice.

Copyright © 2007 National Society of Professional Engineers for EJCDC. All rights reserved.

17.02 *Computation of Times*

A. When any period of time is referred to in the Contract Documents by days, it will be computed to exclude the first and include the last day of such period. If the last day of any such period falls on a Saturday or Sunday or on a day made a legal holiday by the law of the applicable jurisdiction, such day will be omitted from the computation.

17.03 *Cumulative Remedies*

A. The duties and obligations imposed by these General Conditions and the rights and remedies available hereunder to the parties hereto are in addition to, and are not to be construed in any way as a limitation of, any rights and remedies available to any or all of them which are otherwise imposed or available by Laws or Regulations, by special warranty or guarantee, or by other provisions of the Contract Documents. The provisions of this Paragraph will be as effective as if repeated specifically in the Contract Documents in connection with each particular duty, obligation, right, and remedy to which they apply.

17.04 *Survival of Obligations*

A. All representations, indemnifications, warranties, and guarantees made in, required by, or given in accordance with the Contract Documents, as well as all continuing obligations indicated in the Contract Documents, will survive final payment, completion, and acceptance of the Work or termination or completion of the Contract or termination of the services of Contractor.

17.05 *Controlling Law*

A. This Contract is to be governed by the law of the state in which the Project is located. See Additional Supplementary Conditions for specific requirements.

17.06 *Headings*

A. Article and paragraph headings are inserted for convenience only and do not constitute parts of these General Conditions.

17.07 *Professional Fees and Court Costs Included*

A. In any action or proceeding to enforce or interpret any contractual provision or to resolve any conflict or dispute relating to or arising from this Contract, the prevailing party shall be entitled to recover, as part of its claim, award or judgment, reasonable attorneys; fees and associated costs and expenses, including expenses of engineering, claims and other consultants.

END OF SECTION

Copyright © 2007 National Society of Professional Engineers for EJCDC. All rights reserved.

This page intentionally left blank

SECTION 00 73 05

ADDITIONAL SUPPLEMENTARY CONDITIONS

The following are in addition to the modifications highlighted within the text of the Standard General and Supplementary Conditions. All provisions which are not so modified or supplemented remain in full force and effect. The Additional Supplementary Instructions may include certain provisions required by Laws and Regulations. Contractor is responsible to determine and obtain applicable Laws and Regulations and to review and interpret the full text of such Laws and Regulations.

The terms used in these additional Supplementary Conditions have the meanings stated in the Standard General and Supplementary Conditions and as included within the Sections listed below.

00 73 10	Specific Project Requirements
00 73 19	Health and Safety Requirements
00 73 37	Equal Employment Opportunity Requirements
00 73 43	Wage Rate Requirements
00 73 46	Wage Determination Schedule
00 73 73	Statutory Requirements

This page intentionally left blank

SECTION 00 73 10

PROJECT SPECIFIC REQUIREMENTS

1.01 GENERAL

A. The address system used herein is the same as the address system used in the Standard General and Supplementary Conditions, with the prefix "SC" added thereto. Additional terms used in this Section have the meanings stated below, which are applicable to both the singular and plural thereof.

B. The contents of this Section do not represent or reflect all applicable provisions and policies, Regulations, or Laws, and may only include excerpts and portions thereof. Other required provisions and policies, Regulations, and Laws shall be deemed to be so included and incorporated herein. Contractor is solely responsible to determine, obtain, review and interpret the full text of applicable provisions and policies, Regulations, and Laws.

SC-2.05 ***Before Starting Construction***

Pursuant to subparagraph 2.05.A.3, the Units Prices Form included as Section 00 43 22 with the Bid will constitute the preliminary Schedule of Values for this Project.

SC-3.06 ***Electronic Data***

Pursuant to Paragraph 3.06.A, the Contractor may rely on the following electronic data furnished by Owner or Engineer.

1. Files transmitted to the Contractor in “.PDF” format which are understood by all parties to constitute official project correspondence such as a response to a request for information or submittal review.

SC-4.02 ***Subsurface and Physical Conditions***

A. Pursuant to Paragraph 4.02,

1. the following reports of explorations and tests of subsurface conditions at or contiguous to the Site are known to Owner:

a. As specified in the Drawings under General Notes:

1) Existing Conditions Survey prepared by DaSilva Survey Services. Vertical datum based on City of Quincy base datum.

2) Conduct test pits to verify existing conditions as approved and coordinated with the City of Quincy DPW at no additional cost to Owner.

3) Flood zone: all areas of proposed construction are within Federal Emergency Management Agency's (FEMA) "Zone X" as depicted on Flood Insurance Rate Maps 25021C0069E dated July 17, 2012.

4) Exploratory test pits performed December 2013.

2. The following drawings of physical conditions relating to existing surface or subsurface structures at the Site (except Underground Facilities) are known to Owner:

a. Drawings listed in Section 00 01 15 generally identify certain existing surface and subsurface structures and additional subsurface items may be encountered which are subject to Paragraph 4.04 of the Standard General and Supplementary Conditions and Additional Supplementary Conditions.

SC-4.06 ***Hazardous Environmental Conditions at Site***

A. Pursuant to Paragraph 4.06.,

1. the following reports regarding Hazardous Environmental Conditions at the Site are known to Owner:

a. None

2. The following drawings regarding Hazardous Environmental Conditions at the Site are known to Owner:

a. None

SC-6 ***Contractor's Responsibilities***

Pursuant to Article 6, Contractor shall comply with special coordination requirements and communicate with identified contacts during prosecution of the Work as set forth in Section 01 15 00.

SC-6.02 ***Labor; Working Hours***

Pursuant to Paragraph 6.02.B, regular working hours for this Project are 7:30 a.m. to 3:30 p.m., Monday through Friday.

SC-6.08 ***Permits***

Pursuant to subparagraph 6.08.A, the Contractor shall comply with permit requirements included in Quincy Code of Ordinances, Chapters 12.08 and 17.36 included as Attachment B to this Section. Note Owner will waive fees associated with road opening and trench permits to be obtained by Contractor.

Pursuant to subparagraph 6.08.A.1, Owner has obtained construction access for Work within private properties for the Project, if any.

SC-6.09 ***Laws and Regulations***

Pursuant to Paragraph 6.09, the Contractor shall comply with the following additional requirements, portions of which are included as Attachment C to this section.

- Quincy Code of Ordinances
- Quincy Zoning Ordinance (Title 17 of the Code of Ordinances)

SC-6.11 ***Use of Site and Other Areas***

Pursuant to Paragraph 6.11.A, the Contractor shall provide that access to businesses and residences are maintained during prosecution of the Work.

SC-7.02 ***Coordination***

Pursuant to Paragraph 7.02.A, Owner may separately contract for other work on the Project at the Site. Coordination shall be through Engineer, Park & Forestry Department and School department as necessary.

SC-8.09 ***Limitations on Owner's Responsibilities***

Pursuant to Paragraph 8.09, no officer, member or employee of the City of Quincy or its designees or agents, and no member of its governing body, and no other public official of the governing body of the locality or localities in which the project is situated or being carried out, who exercises any function or responsibilities in the review or approval or the undertaking or carrying out of this project, shall participate in any decisions relating to this Contract, which affects his personal interest or the interest of any corporation, partnership, or associations in which he is directly or indirectly interested or have any personal or pecuniary interest, direct or indirect, in this contract or proceeds thereof.

ATTACHMENTS

A. Quincy Code of Ordinances, Chapters 12.08 and 17.36

B. Quincy Code of Ordinances, cover, preface, contents and Quincy Zoning Ordinance June, 2011, contents and website

END OF SECTION

12.08.010 - Streets—Defined.

Whenever the word "street" is used in this title, it shall be understood as meaning to include lanes, alleys, courts, public squares and sidewalks, unless otherwise expressed.

(Prior code Ch. 18, § 1)

12.08.020 - Permit for digging in public ways.

No entity (person, business, utility, government agency) shall dig into or break-up any public street in the city without first having obtained a permit from the commissioner of public works. The permit (hereafter known as a street opening permit) shall be in a form acceptable to the commissioner, consistent with this code and other laws. The commissioner may attach general and specific conditions under which a permit is granted. In all cases, the permit must be signed by the utility or property owner and contractor.

(Ord. 94-226 (part))

12.08.021 - Fees for street opening permits.

A. A one hundred dollar nonrefundable application fee is required.

B. A five hundred dollar, cash or certified check refundable deposit is required and will be held until the municipal contractor completes the permanent patch and payment is received. Interest on retained money is considered to be the property of the municipality. Trenches not inspected due to the failure of the permittee to properly notify the governing authority shall be subject to loss of deposit, and/or repeat of reconstruction procedures.

C. A five thousand dollar performance and payment bond is required for each street opening permit granted. The governing authority may allow a blanket bond commensurate with anticipated permit activity for routine excavators. Under no circumstances will this blanket bond be less than fifty thousand dollars.

D. The contractor must furnish the municipality with a certificate of insurance for general liability in the amount of one million five hundred thousand dollars.

(Ord. 94-226 (part))

12.08.022 - Notification.

A. The designated municipal coordinator of the governing authority shall be notified twenty-four hours before the commencement of any work.

B. Dig safe must be notified.

(Ord. 94-226 (part))

12.08.023 - Construction procedures.

A. The pavement shall be pre-cut and may only be disturbed within the area requiring excavation for repair, replacement or new installation. When the opening occurs within two feet of the curb and/or edge of the hardened surface, the paved area between the excavation and the curb and/or edge must also be removed.

B.

In the backfill process, the backfill shall be comprised of suitable material (subject to approval of the governing authority or his authorized representative). Concrete should be used around all electric and telephone conduit in trenches. Controlled density fill (CDF) may be required. Compaction, (when CDF is not in use) will be executed in six inch layers. Each layer shall be ninety-five percent compacted by mechanical means. When the total surface area of an individual opening in bituminous concrete is less than nine square feet, all backfill material(s) will be placed to within a minimum of six inches of the pavement surface, or the thickness of the original pavement structure, whichever is greater. For individual openings with surface areas of nine square feet and larger, the backfill materials will be installed to within four inches of the pavement surface or the thickness of the existing structure, whichever is greater. "Pavement structure" will incorporate all previous paving materials used above the gravel sub-base, including but not limited to bituminous concrete, cement concrete, cobblestone, macadam, etc.

C. The hardened pavement shall then be cut back and removed six to twelve inches from all sides of the initial excavation to the depth of the original pavement structure, exposing the undisturbed gravel sub-base. Edges will be cut perpendicular to the surrounding surface and have a clean vertical face, particularly in the corners. All structures shall be leveled to the adjacent surfaces. The cut back shall be in straight lines with ninety degree angles at the point(s) of intersection.

D. All surplus and/or unacceptable excavated materials shall be removed from the job site immediately. The excavation site shall be maintained in a clean and safe condition at all times. Sidewalks and streets shall be cleaned and opened to traffic at the end of each working day, unless otherwise authorized by the governing authority. Access to properties are to be maintained. The removal and disposal of materials, including pavement, is the responsibility of the permittee. This shall be achieved in such a manner to minimize interference with pedestrian and vehicular traffic.

E. The permittee shall be liable for the condition of the street and sidewalk openings and protection thereof prior to the temporary repair, and will be held responsible for all damage due to any failure of barricades, barriers, warning signs, lights or steel plates to properly protect the work from traffic, pedestrians or other causes. Other than while work is actually being performed, all open ditches shall be protected by uniform traffic control devices in conformance with the Massachusetts Highway Department Manual. All excavations must be properly secured to insure the safety of the travelling public, and immediately reported to the designated municipal coordinator.

F. Temporary patching shall be performed by a contract representative of the governing authority and shall be the financial responsibility of the permittee. All barricades and/or safety devices shall be immediately removed from the vicinity upon completion of the temporary bituminous patching application.

G. Any improperly prepared excavations, including those left with unacceptable backfill material or insufficient pavement depth, shall be temporarily paved by the municipal contract representative and charged to the refundable deposit of the permittee. The deposit shall immediately replenished to the original amount. At a later date, the trench shall be re-excavated and prepared correctly by the permittee. Under these conditions the permittee may also be subject to permit cancellation, inspection fees, fines, and loss of deposit and bond.

H. All excavations will be required to settle and/or consolidate for a period of time before the contract representative of the governing authority is directed to perform a permanent repair. This term will be defined as a minimum of thirty days when controlled density fill was used as backfill material. Compacted gravel sub-base must experience at least one seasonal

freeze/thaw cycle. The governing authority reserves the right to address any sub-base deficiency within, or adjacent to, the original excavated area with whatever measure deemed effective, during this period. These corrective procedures will be the financial responsibility of the permittee.

I. Immediately after the specified settling and/or consolidation period, all excavations shall be permanently restored by the contract representative for the governing authority. The following procedures shall be strictly adhered to:

1. The infrared process shall be utilized as the primary method of permanent restoration in bituminous concrete surfaces.
2. Temporary asphalt patches installed in cement concrete surfaces shall be re-excavated to the extremities of the square(s) in which the excavation is contained. The finished concrete shall be replaced to the depth, strength, and contour of the original structure. Any concrete surface damaged during construction shall also be replaced in a like manner.
3. All other surfaces, including but not limited to asphalt, brick, grass and wood shall be replaced consistent with the original and in strict accordance with municipal specifications.

The permittee shall also be responsible for any and all necessary appurtenant measures including, but not limited to, complete surface reconstruction, curbing, resetting utility structures, "bar holes," compatible crackfilling, tack coating and infrared integration of pavement. All the required processes shall be determined by a site inspection with an authorized representative of the governing authority. All restoration procedures shall be the financial obligation of the permittee.

J. The permittee shall be responsible for any settlement, sub-base failure and pavement cracks that develop in, or adjacent to, the original excavated area for a period of three years from the date of the final accepted permanent repair or, if controlled density fill is used, for a period of one year from the date of the final accepted permanent repair. Any surface disorder caused by settlement and/or sub-base movement within the general area containing a street or sidewalk opening, shall be addressed by the municipal contract representative, at the direction of the governing authority. All related corrective measures will be charged to the permittee, and the term of obligation will begin again.

K. Excavations opened without the permit may be subject to cancellation and refusal of existing and future permits, and associated fines.

L. Police protection, if required, shall be paid by the permittee either directly or billed by the municipal representative of the municipality and billed directly to the permittee.

M. All surface restorations, bituminous concrete replacements, and permanent repairs will be done by a contract representative of the municipality and billed directly to the permittee.

(Ord. 94-226 (part))

12.08.024 - Billing and collections.

A. The contract representative of the municipality shall bill the permittee for the above mentioned services. All invoices will be paid within thirty days. One past due invoices, a service charge of one and one-half percent per month will be allowed on accounts thirty days past due, provided the rate does not exceed that which is permitted by law, in which case the highest allowable legal rate will apply. Invoices exceeding ninety days shall be paid by the municipality from the refundable deposit and/or bond, at which point the municipality shall fine the permittee that cost plus one hundred dollars per day, and continue to accrue the

service charges on any uncollected monies together with all costs of collection including attorney's fees.

B. The governing authority reserves the right to assume the billing function, including assessment and conveyance of reasonable handling charges, as provided by Massachusetts General Laws.

On ninety days past-due invoices, the municipality will revoke existing and future permits until payment of such invoices, including all service charges and fines.

If the account is found to be uncollectible, there shall be a lien upon such real estate in the manner provided in M.G.L. Ch. 40, Sec. 42A to 42F.

(Ord. 94-226 (part))

12.08.030 - Street construction—Safeguarding—Requirements—Fencing and lighting.

During the progress of any work referred to in the preceding section, the person holding the permit shall guard the area of such work by a proper fence or railing, and by lights during the nighttime, subject to the approval of the commissioner of public works.

(Prior code Ch. 18, § 5)

12.08.040 - Street construction—Safeguarding—Police detail required—Cost liability.

A. Any person, except the commissioner of public works, his agent or servant, receiving a permit to open, occupy, obstruct, use, dig into or break up any public street of the city, or portion thereof, in accordance with the provisions of Sections 12.08.020 and 12.08.030, shall maintain at his or its expense such police officer of the city, but in no event less than one police officer at each street location designated in each permit required to be issued, as the chief of police may deem necessary, to avoid, so far as reasonably possible, danger to the safety of persons and interference with the free circulation of vehicular traffic. For the purposes of this section, no emergency or like permits shall be issued granting blanket or similar permission to open, occupy, obstruct, use, dig into or break up more than one particular or separate street location per permit.

B. Opening Manholes. A person receiving a permit to open a manhole in any public street of the city shall maintain at his or its expense such police officers of the city as the chief of police may deem necessary, to avoid, so far as reasonably possible, danger to the safety of persons and interference with vehicular traffic.

C. Failure to Comply. Failure on the part of any such person to maintain such detail shall be cause for revocation of such permit, or the closing down of the opening, obstructing, using, digging into or breaking up of any public street of the city by police officers of the city until such detail is maintained.

D. Emergency Construction. In the event of an emergency which requires the opening, obstructing, using, digging into, or breaking up of any public street of or private way in the city by a person not able to obtain a permit because of the hour, such person shall immediately notify the officer in charge of Quincy police headquarters in order that the necessary police officers, but in no event less than one police officer, as designated by said officer, at each separate street location or place of such opening, obstructing, using, digging into, or breaking up of such street shall be assigned at the expense of such person.

(Ord. 1978-100; Ord. 1977-271: prior code Ch. 18, § 5A)

12.08.050 - Digging near streets—Fencing required—Time limits.

If any person shall dig a cellar, or other cavity in the ground near to or adjoining any street, he shall, so long as the commissioner of public works may require, keep a railing or fence on or near the line of such street sufficient to protect travelers from falling into the place so dug, or being injured thereby.

(Prior code Ch. 18, § 36)

12.08.060 - Obstructing—Depositing trash or debris—Permitted for collection when.

No person shall place or cause to be placed or deposited, upon any street or other public place in this city, merchandise, ashes, shavings, house dirt, filth, offal or rubbish which shall in any way obstruct and disfigure the same; nor suffer his wood and coal to remain unnecessarily on any street. And no person shall place or deposit, or cause to be placed or deposited, any newspaper, circular, card or wastepaper of any kind or description upon any street or other public place in this city. And no person shall saw or split wood, or pile the same on any sidewalk; provided, that ashes or rubbish in suitable containers may be placed in the streets for collection, in such manner and on such days as the commissioner of public works may direct. No person shall place or cause to be placed on the public sidewalk rubbish barrels or rubbish containers fifteen hours before seven a.m. on the date of collections.

(Prior code Ch. 18, § 2)

12.08.070 - Obstructing during construction—Permit required—Requirements—Indemnification of city.

No person, unless authorized by law, shall erect on any street any staging for building, or place thereon any lumber, brick or other building materials, without a written permit from the commissioner of public works. Any person intending to erect or repair any building upon land abutting on a street shall give notice to the commissioner of public works, who may, at the owner's request, set apart such portion of the street as he shall deem expedient for such use. Such person shall, before the expiration of his permit, remove all rubbish, and restore such street, square or park to its former condition, to the satisfaction of the commissioner of public works. Every person so permitted shall, in writing, agree to indemnify the city against all damage or loss to the city, accruing from the doing of any act or thing under such permit, and sureties may be required by the commissioner of public works, and every person who, when so permitted, shall obstruct or render unsafe any public street, shall guard the same by a proper fence or railing, and by lights during the nighttime, subject to the approval of the commissioner of public works. Such permit may be revoked at any time by the commissioner of public works or by the city council.

(Prior code Ch. 18, § 3)

12.08.080 - Obstructing—Signs and awnings—Permission required—Requirements.

No person shall place or maintain over any street any sign, awning, shade or other obstruction, unless permission shall have first been obtained in writing from the commissioner of

public works. All such signs, awnings, shades or other obstructions shall be safely and securely supported. No awning shall be less than seven feet from the ground at its lowest point. All signs, awnings, shades and other obstructions, if built over a sidewalk, shall be of such width as shall be determined by the commissioner of public works.

(Prior code Ch. 18, § 7)

12.08.090 - Obstructing free passage.

No person shall stand, or remain alone, or with or near others, in any street of this city, in such a manner as to obstruct a free passage for passengers therein, or over any footway or sidewalk.

(Prior code Ch. 18, § 8)

12.08.100 - Placing obstructions on flagstones, stepping stones or footwalks.

No person shall place any obstruction of any kind upon any flagstone or stepping stone or other footwalks across any street in this city.

(Prior code Ch. 18, § 9)

Chapter 17.36 - ENVIRONMENTAL CONTROLS

Sections:

17.36.010 - Illumination—Residence districts.
17.36.020 - Earth removal—Permit required.
17.36.030 - Earth removal—Permit—Application—Procedures—Contents.
17.36.040 - Earth removal—Permit—Conditions and restrictions.
17.36.050 - Earth removal—Permit—Duration—Renewal—Bond required when.
17.36.060 - Earth removal—Permit—Exceptions.
17.36.070 - Fencing and screening—Industrial and Business districts—Requirements.
17.36.080 - Traffic visibility across corners.
17.36.090 - Blasting—Permits—Pre-blasting survey—Required—Requirements.
17.36.100 - Blasting—Pre-blasting survey—Disposition of survey data.
17.36.110 - Blasting—Pre-blasting survey—Not required when.
17.36.120 - Blasting—Posting of bond—Required when—Amount.
17.36.130 - Blasting—Fire department supervision—Required—Costs.
17.36.140 - Blasting—Violations—Penalties.

17.36.010 - Illumination—Residence districts.

A. In a Residence district, no outdoor decorative or floodlighting shall be permitted except lighting primarily designed to illuminate walks, driveways, parking areas, doorways, outdoor living areas or outdoor recreational facilities, and except temporary holiday lighting, and except decorative floodlighting of institutions, public or historic buildings. Any permanent lighting permitted by the preceding sentence shall be continuous indirect light installed in such a manner that will prevent direct light from shining onto any street or adjacent property. No neon type or exposed illuminated gas tube type light shall be allowed.

(Prior code Ch. 24, § 82)

17.36.020 - Earth removal—Permit required.

No soil, loam, sand, gravel or stone shall be removed from any lot not in public use in the city without first obtaining a special permit from the board of appeals except as exempted in Section 17.36.060.

(Prior code Ch. 24, § 83 (part))

17.36.030 - Earth removal—Permit—Application—Procedures—Contents.

A. Each application for a special permit for earth removal shall be accompanied by a plan, submitted in triplicate, prepared at the expense of the applicant by a registered land surveyor or civil engineer, showing:

1. The existing contours of the land;

2. The contours after completion of the operation;
3. All public roads and private means of vehicular access;
4. Proposed drainage;
5. Any other information as may be required by the board of appeals.

(Prior code Ch. 24, § 83 (part))

17.36.040 - Earth removal—Permit—Conditions and restrictions.

A. In granting a permit hereunder, the board of appeals may impose reasonable conditions and restrictions as it deems to be in the public interest, including, but not limited to:
   1. Method of removal;
   2. Type and location of temporary structures;
   3. Hours of operation;
   4. Operations of removal trucks;
   5. Area, depth and contours of excavations;
   6. Distance of excavation to street and lot lines;
   7. Reestablishment of ground lands and grades;
   8. Provisions for temporary and permanent drainage;
   9. Disposition of boulders and tree stumps;
   10. Replacement of loam over the area of removal;
   11. Planting of the area to suitable cover;
   12. Cleaning, repair and/or resurfacing of streets used in removal activities which have been adversely affected by the removal activity.

(Prior code Ch. 24, § 83 (part))

17.36.050 - Earth removal—Permit—Duration—Renewal—Bond required when.

No permit for removal shall be issued for a period of more than three years, although such a permit may be renewed for additional periods in the same manner. The board of appeals shall require a cash bond or surety company bond to insure compliance with its conditions of authorization unless in a particular case it specifically finds that such security is not warranted and so states in its decision, giving the reason for its finding.

(Prior code Ch. 24, § 83 (part))

17.36.060 - Earth removal—Permit—Exceptions.

Sections 17.36.020 through 17.36.050 shall not apply to the following:

A. The removal of less than ten cubic yards of material in the aggregate in any year from one premise;
B. The transfer of material from one part of a premise to another part of the same premise for immediate use in such other part of the premise;
C. The removal of material necessarily excavated in connection with the lawful construction of a building or structure, driveway, parking area, sidewalk or path incidental to any such building or structure, as indicated on plans and profiles prepared by a registered engineer and approved by the director of inspections;
D.

The removal of material necessarily excavated in connection with the lawful construction of public or private ways as indicated on plans and profiles prepared by a registered engineer and approved by the planning board.

(Ord. 97-337 § 6 (part); prior code Ch. 24, § 83 (part))

17.36.070 - Fencing and screening—Industrial and Business districts—Requirements.

A. Required when — Permitted Types. In an Industrial or Business district, the outdoor storage of goods, products, materials or equipment shall, if visible at normal eye level from any point beyond the boundaries of the premises and less than five hundred feet distant, be screened from such view. Screening, as defined herein, shall be an ornamental lattice, opaque fence, plantings or sight-obscuring screening which shall not be less than six nor more than ten feet high and not less than fifty percent opaque. Plantings shall be at least ten feet in width and contain at least two rows of alternate live deciduous and evergreen trees. Said trees shall not be more than five feet apart, shall have an original planting height of at least six feet, shall be able to attain a height of at least ten feet, and shall be maintained in a healthy growing condition by the property owner. Any existing open storage in any district shall within one year of the effective date of the ordinance codified in this title be properly screened or removed.

B. Adjacent to Residential Districts. Where an Industrial district is located adjacent to a Residence district or a public park or playground and is not separated therefrom by a public way, a compact planting screen as defined in subsection A of this section along the property or lot line adjoining said district boundary shall be provided and maintained by the owners of said premises. Said screening area shall contain no structures or parking or be devoted to any other use or purpose, and shall be maintained in a healthy growing condition by the property owner.

(Prior code Ch. 24, § 84)

17.36.080 - Traffic visibility across corners.

In any district, no structure, fence or sign shall be constructed and no vegetation shall be planted or maintained between a plane two and one-half feet above curb level and a plane ten feet above curb level, so as to interfere with traffic visibility across a corner within that part of the lot which is within a triangle formed by the street lines and a third line joining points on the street lot lines twenty-five feet from their intersection.

(Ord. 1988-6: prior code Ch. 24, § 85)

17.36.090 - Blasting—Permits—Pre-blasting survey—Required—Requirements.

A. Permitted Surveyors. For all permits issued for blasting (rock excavation) in the city, a pre-blast survey must be made by the contractor or by an approved firm in this kind of work and satisfactory to the contractor's insurance company.

B. Requirements.

1. Approval. The pre-blast survey will include a survey of the interior and exterior of existing buildings and stone walls adjacent to the project as specified herein, before any excavation or blasting is done. Written approval must be secured from the fire chief, city engineer and director of inspections serving as the committee on blasting.

2.

Adjacent Area. The adjacent area requiring the pre-blast survey is specified as all buildings and stone walls within a radius of three hundred fifty feet from said blast.

3. Structural Defects. The survey shall record all visible structural defects such as cracks, settlement and lines out of plumb.

(Ord. 97-337 § 6 (part); Ord. 1988-236 (part): prior code Ch. 24, § 87 (part))

17.36.100 - Blasting—Pre-blasting survey—Disposition of survey data.

The survey data shall be recorded in a permanent manner in approved hardbound notebooks. The survey data shall include polaroid photographs showing the building constructions surveyed referenced to the notebook pages. Also a tape recording of all data pertinent to the survey shall be made. The scope and format of the record survey data shall be satisfactory to the committee on blasting. Before commencing any blasting or ledge excavation, copies of the survey must be on file at the offices of the Quincy city engineer and the Quincy city clerk, City Hall, Quincy, MA.

(Ord. 1988-236 (part): prior code Ch. 24, § 87 (part))

17.36.110 - Blasting—Pre-blasting survey—Not required when.

No pre-blasting survey shall be required if blasting is within the following limits: The total charge weight per blast does not exceed five pounds and the maximum weight per delay does not exceed two pounds per delay.

(Ord. 1988-236 (part): prior code Ch. 24, § 87 (part))

17.36.120 - Blasting—Posting of bond—Required when—Amount.

If blasting is designed to excavate more than a ten-cubic-yard area, the contractor must post a bond with the city. The amount of said bond shall be determined by the committee on blasting. The committee on blasting will not release the bond until it is convinced that all judgments and claims have been reasonably dealt with by the contractor.

(Ord. 1988-236 (part): prior code Ch. 24, § 87 (part))

17.36.130 - Blasting—Fire department supervision—Required—Costs.

All blasting is to be supervised on site by an authorized member of the fire department, assigned by the chief, and the cost of said supervision shall be the sole responsibility of the contractor.

(Ord. 1988-236 (part): prior code Ch. 24, § 87 (part))

17.36.140 - Blasting—Violations—Penalties.

Any person who shall violate any of the provisions of Sections 17.36.090 through 17.36.130, as determined by the committee on blasting, or who fails to comply therewith, shall severally, for each and every violation and noncompliance respectively, be liable to a penalty of two hundred dollars for each offense.

(Ord. 1988-236 (part): prior code Ch. 24, § 87 (part))

QUINCY, MASSACHUSETTS - MUNICIPAL CODE

A Codification of the General Ordinances of the City of Quincy, Massachusetts

Beginning in September 2009, Supplemented by Municipal Code Corporation

Municipal Code Corporation
PO Box 2235 Tallahassee, FL 32316
800-262-2633 • Fax: 850-575-8852
Municode.com • info@municode.com

PREFACE
HOW TO USE YOUR CODE

PREFACE

The Quincy, Massachusetts Municipal Code, originally published by Book Publishing Company in 1992, has been kept current by regular supplementation by Matthew Bender & Company, Inc., its successor in interest.

Beginning in September 2009, Municipal Code Corporation will be keeping this code current by regular supplementation.

During original codification, the ordinances were compiled, edited and indexed by the editorial staff of Book Publishing Company under the direction of Stephen J. McGrath, city solicitor, Joseph P. Shea, city clerk, and John M. Gillis, former city clerk.

The code is organized by subject matter under an expandable three-factor decimal numbering system which is designed to facilitate supplementation without disturbing the numbering

of existing provisions. Each section number designates, in sequence, the numbers of the Title, chapter, and section. Thus, Section 2.12.040 is Section .040, located in Chapter 2.12 of Title 2. In most instances, sections are numbered by tens (.010, .020, .030, etc.), leaving nine vacant positions between original sections to accommodate future provisions. Similarly, chapters and titles are numbered to provide for internal expansion.

In parentheses following each section is a legislative history identifying the specific sources for the provisions of that section. This legislative history is complemented by an ordinance disposition table, following the text of the code, listing by number all ordinances, their subjects, and where they appear in the codification; and beginning in September 2009, legislation can be tracked using the "Code Comparative Table and Disposition List."

A subject-matter index, with complete cross-referencing, locates specific code provisions by individual section numbers.

This supplement brings the Code up to date through Ordinance ___, passed ___ (Month, Date, Year)___.

Municipal Code Corporation
1700 Capital Circle SW
Tallahassee, FL 32310
800-262-2633

HOW TO USE YOUR CODE

This code is organized to make the laws of the city as accessible as possible to city officials, city employees and private citizens. Please take a moment to familiarize yourself with some of the important elements of this code.

Numbering System.

The numbering system is the backbone of a Code of Ordinances; Municipal Code Corporation uses a unique and versatile numbering structure that allows for easy expansion and amendment of this Code. It is based on three tiers, beginning with title, then chapter, and ending with section. Each part is represented in the code section number. For example, Section 2.04.010 is Section .010, in Chapter 2.04 of Title 2.

Title.

A title is a broad category under which ordinances on a related subject are compiled. This code contains about 15 to 20 titles. For example, the first title is Title 1, General Provisions, which may contain ordinances about the general penalty, code adoption and definitions. The titles in this code are separated by tabbed divider pages for quick reference. Some titles are **Reserved** for later use.

Chapter.

Chapters deal with more specific subjects, and are often derived from one ordinance. All of the chapters on a related subject are grouped in one title. The chapters are numbered so that new chapters which should logically be placed near certain existing chapters can be added at a later

time without renumbering existing material. For example, Chapter 2.06, City Manager, can be added between 2.04, City Council, and Chapter 2.08, City Attorney.

Section.

Each section of the code contains substantive ordinance material. The sections are numbered by "tens" to allow for expansion of the code without renumbering.

Tables of Contents.

There are many tables of contents in this code to assist in locating specific information. At the beginning of the code is the main table of contents listing each title. In addition, each title and chapter has its own table of contents listing the chapters and sections, respectively.

Ordinance History Note.

At the end of each code section, you will find an "ordinance history note," which lists the underlying ordinances for that section. The ordinances are listed by number, section (if applicable) and year. (Example: (Ord. 272 § 1, 1992).)

Beginning in September 2009, a secondary ordinance history note will be appended to affected sections. Ordinance history notes will be amended with the most recent ordinance added to the end. These history notes can be cross referenced to the code comparative table and disposition list appearing at the back of the volume preceding the index.

Statutory References.

The statutory references direct the code user to those portions of the state statutes that are applicable to the laws of the municipality. As the statutes are revised, these references will be updated.

Cross-Reference Table.

When a code is based on an earlier codification, the cross-reference table will help users find older or "prior" code references in the new code. The cross-reference table is located near the end of the code, under the tabbed divider "Tables." This table lists the prior code section in the column labeled "Prior Code Section" and the new code section in the column labeled "Herein."

As of September 2009, this table will no longer be updated.

Ordinance List and Disposition Table.

To find a specific ordinance in the code, turn to the section called "Tables" for the Ordinance List and Disposition Table. This very useful table tells you the status of every ordinance reviewed for inclusion in the code. The table is organized by ordinance number and provides a brief description and the disposition of the ordinance. If the ordinance is codified, the chapter (or chapters) will be indicated. (Example: (2.04, 6.12, 9.04).) If the ordinance is of a temporary nature or deals with subjects not normally codified, such as budgets, taxes, annexations or rezones, the disposition will be "(Special)." If the ordinance is for some reason omitted from the code, usually at the direction of the municipality, the disposition will be "(Not codified)." Other dispositions sometimes used are "(Tabled)," "(Pending)," "(Number Not Used)" or "(Missing)."

Beginning in September 2009, this table will be replaced with the "Code Comparative Table and Disposition List."

Code Comparative Table and Disposition List.

Beginning in September 2009, a Code Comparative Table and Disposition List has been added for use in tracking legislative history. Located in the back of this volume, this table is a chronological listing of each ordinance considered for codification. The Code Comparative Table and Disposition List specifies the ordinance number, adoption date, description of the ordinance and the disposition within the code of each ordinance. By use of the Code Comparative Table and Disposition List, the reader can locate any section of the code as supplemented, and any subsequent ordinance included herein.

Index.

If you are not certain where to look for a particular subject in this code, start with the index. This is an alphabetical multi-tier subject index which uses section numbers as the reference, and cross-references where necessary. Look for the main heading of the subject you need, then the appropriate subheadings:

BUSINESS LICENSE
- See also BUSINESS TAX
- Fee 5.04.030
- Required when 5.04.010

The index will be updated as necessary when the code text is amended.

Instruction Sheet.

Each supplement to the new code will be accompanied by an Instruction Sheet. The Instruction Sheet will tell the code user the date of the most recent supplement and the last ordinance contained in that supplement. It will then list the pages that must be pulled from the code and the new pages that must be inserted. Following these instructions carefully will assure that the code is kept accurate and current. Removed pages should be kept for future reference.

Page Numbers.

When originally published, the pages of this code were consecutively numbered. As of September 2009, when new pages are inserted with amendments, the pages will follow a "Point Numbering System". (Example: 32, 32.1, 32.2, 32.2.1, 32.2.2., 33). Backs of pages that are blank (in codes that are printed double-sided) will be left unnumbered but the number will be "reserved" for later use.

Electronic Submission.

In the interests of accuracy and speed, we encourage you to submit your ordinances electronically if at all possible. We can accept most any file format, including Word, WordPerfect or text files. If you have a choice, we prefer Word, any version. You can send files to us as an e-mail attachment, by FTP, on a diskette or CD-ROM. Electronic files enable us not only to get you your code more quickly but also ensure that it is error-free. Our e-mail address is: **ords@municode.com**.

For hard copy, send two copies of all ordinances passed to:

Municipal Code Corporation
P.O. Box 2235
Tallahassee, FL 32316

Customer Service.

If you have any questions about this code or our services, please contact Municipal Code Corporation at 1-800-262-2633 or:

Municipal Code Corporation
1700 Capital Circle SW
Tallahassee, FL 32310

TITLE 1 - GENERAL PROVISIONS

Chapters:

Chapter 1.01 - CODE ADOPTION(Reserved)
Chapter 1.04 - GENERAL PROVISIONS(Reserved)
Chapter 1.08 - CITY SEAL
Chapter 1.12 - MUNICIPAL STANDARD AND CITY FLAG
Chapter 1.16 - GENERAL PENALTIES

TITLE 2 - ADMINISTRATION AND PERSONNEL

Chapters:

Chapter 2.04 - CITY BRANCHES, DEPARTMENTS AND DIVISIONS
Chapter 2.08 - CITY COUNCIL
Chapter 2.12 - CLERK OF COMMITTEES
Chapter 2.16 - CITY CLERK
Chapter 2.20 - CITY AUDITOR
Chapter 2.24 - CITY SOLICITOR
Chapter 2.28 - TREASURER AND COLLECTOR
Chapter 2.36 - PUBLIC WORKS
Chapter 2.40 - HEALTH COMMISSIONER
Chapter 2.44 - BUDGET COORDINATOR
Chapter 2.48 - PURCHASING AGENT
Chapter 2.52 - DEPARTMENT OF INSPECTIONS
Chapter 2.56 - HARBOR MASTER
Chapter 2.60 - DIRECTOR OF VETERANS' SERVICES
Chapter 2.68 - POLICE DEPARTMENT
Chapter 2.72 - FIRE DEPARTMENT
Chapter 2.76 - DEPARTMENT OF INFORMATION AND TECHNOLOGY AND TELECOMMUNICATIONS SYSTEMS
Chapter 2.80 - DEPARTMENT OF TRAFFIC ENGINEERING AND CONTROL
Chapter 2.84 - COMMUNICATION DIVISION
Chapter 2.88 - EMERGENCY MANAGEMENT
Chapter 2.92 - PLANNING BOARD
Chapter 2.96 - BOARD OF ASSESSORS
Chapter 2.100 - BOARD OF REGISTRARS OF VOTERS
Chapter 2.104 - BOARD OF MANAGERS OF HOSPITAL DEPARTMENT
Chapter 2.108 - BOARD OF MANAGERS OF ELIZABETH SERPOSS CLINIC
Chapter 2.116 - CONSERVATION COMMISSION
Chapter 2.117 - RECYCLING COMMISSION
Chapter 2.120 - COMMISSION ON DISABILITY
Chapter 2.124 - QUINCY HISTORICAL COMMISSION
Chapter 2.128 - RENT GRIEVANCE BOARD
Chapter 2.132 - TRAFFIC COMMISSION
Chapter 2.136 - COUNCIL FOR THE AGING
Chapter 2.137 - COMMISSION ON THE FAMILY
Chapter 2.138 - COMMUNITY ORIENTED POLICING AND PROBLEM SOLVING COMMISSION
Chapter 2.140 - MANAGEMENT OF ADAMS ACADEMY
Chapter 2.144 - ADAMS TEMPLE AND SCHOOL FUND
Chapter 2.148 - JOB CLASSIFICATIONS AND SALARIES
Chapter 2.150 - HUMAN RIGHTS COMMISSION

TITLE 3 - REVENUE AND FINANCE

Chapters:

Chapter 3.04 - FISCAL YEAR
Chapter 3.08 - ASSESSMENT PROCEDURES
Chapter 3.12 - CITY LEASES, CONVEYANCES AND CONTRACTS
Chapter 3.16 - PURCHASES OF CITY-OWNED LAND

TITLE 4 - RESERVED

TITLE 5 - BUSINESS LICENSES AND REGULATIONS

Chapters:

Chapter 5.04 - LICENSES AND PERMITS
Chapter 5.08 - GAS STATIONS
Chapter 5.12 - HACKNEY CARRIAGES
Chapter 5.16 - SOLICITORS AND CANVASSERS
Chapter 5.20 - HAWKERS AND PEDDLERS
Chapter 5.24 - JUNK AND SECONDHAND DEALERS
Chapter 5.28 - PRECIOUS METAL DEALERS
Chapter 5.32 - PAWNBROKERS
Chapter 5.36 - PUBLIC CONCERTS, DANCES AND OTHER ENTERTAINMENTS
Chapter 5.40 - MISCELLANEOUS BUSINESS LICENSE FEES AND REGULATIONS

TITLE 6 - ANIMALS

Chapters:

Chapter 6.04 - DOGS AND ANIMALS GENERALLY

TITLE 7 - RESERVED

TITLE 8 - HEALTH AND SAFETY

Chapters:

Chapter 8.04 - FIRE ALARM SYSTEMS
Chapter 8.08 - FLAMMABLE LIQUIDS
Chapter 8.12 - GARBAGE COLLECTION AND DISPOSAL
Chapter 8.16 - QUINCY DISPOSAL FACILITY
Chapter 8.20 - INFECTIOUS WASTE DISPOSAL
Chapter 8.24 - PETROLEUM AND PETROLEUM PRODUCTS
Chapter 8.28 - SMOKING
Chapter 8.30 - ACCESS OF TOBACCO PRODUCTS TO MINORS
Chapter 8.32 - MISCELLANEOUS HEALTH REGULATIONS
Chapter 8.36 - REGULATION OF BODY ART

TITLE 9 - PUBLIC PEACE AND GENERAL WELFARE

Chapters:

Chapter 9.04 - ALCOHOLIC BEVERAGES
Chapter 9.08 - OFFENSES AGAINST PUBLIC PEACE AND DECENCY
Chapter 9.12 - OFFENSES RELATING TO PROPERTY
Chapter 9.16 - OFFENSES BY OR AGAINST MINORS

TITLE 10 - VEHICLES AND TRAFFIC

Chapters:

Chapter 10.04 - GENERAL PROVISIONS
Chapter 10.08 - RULES OF THE ROAD
Chapter 10.12 - SIGNS, SIGNALS AND MARKERS
Chapter 10.16 - PEDESTRIANS
Chapter 10.20 - STOPPING, STANDING AND PARKING
Chapter 10.24 - PARKING METERS
Chapter 10.28 - ABANDONED, WRECKED, DISMANTLED AND DISCARDED VEHICLES
Chapter 10.32 - ONE-WAY STREETS

TITLE 11 - RESERVED

TITLE 12 - STREETS, SIDEWALKS, WATERWAYS AND PUBLIC PLACES

Chapters:

Chapter 12.04 - STREET AND SIDEWALK CONSTRUCTION AND MAINTENANCE
Chapter 12.08 - STREET AND SIDEWALK USE REGULATIONS
Chapter 12.12 - PUBLIC PARKS AND PLAYGROUNDS
Chapter 12.16 - WATER RECREATION REGULATIONS
Chapter 12.20 - SCHOOL GROUNDS
Chapter 12.24 - CITY HARBOR
Chapter 12.26 - MOORING PERMIT
Chapter 12.28 - PUBLIC CONSTRUCTION PROJECTS

TITLE 13 - PUBLIC SERVICES

Chapters:

Chapter 13.04 - WATER SERVICE SYSTEM
Chapter 13.08 - SEWER SERVICE SYSTEM
Chapter 13.12 - UTILITIES PERMITTING

TITLE 14 - RESERVED

TITLE 15 - BUILDINGS AND CONSTRUCTION

Chapters:

Chapter 15.04 - BUILDING PERMIT FEES
Chapter 15.08 - PLUMBING AND GAS PERMIT FEES
Chapter 15.12 - ELECTRICAL PERMITS
Chapter 15.16 - SEWERAGE REHABILITATION FUND
Chapter 15.20 - NUMBERING OF BUILDINGS
Chapter 15.24 - HISTORICAL DISTRICTS
~~Chapter 15.26 - RESPONSIBLE EMPLOYER POLICY~~ **WITHDRAWN**

TITLE 16 - SUBDIVISIONS
RESERVED

TITLE 17 - ZONING

Chapters:

Chapter 17.04 - ADMINISTRATION
Chapter 17.08 - DEFINITIONS
Chapter 17.12 - ZONING DISTRICTS
Chapter 17.16 - USE REGULATIONS
Chapter 17.20 - DIMENSIONAL REQUIREMENTS
Chapter 17.24 - SUPPLEMENTARY PROVISIONS
Chapter 17.28 - PARKING AND LOADING
Chapter 17.32 - SIGNS
Chapter 17.36 - ENVIRONMENTAL CONTROLS
Chapter 17.40 - FLOOD PLAIN DISTRICT

TITLE 18 - ENVIRONMENTAL PROTECTION

Chapters:

Chapter 18.04 - SHELLFISH AND SEAWORMS
Chapter 18.08 - WETLANDS PROTECTION REGULATIONS
Chapter 18.12 - FEEDING OF WATERFOWL
Chapter 18.16 - ENVIRONMENTAL ASSESSMENT AND CONTROLS FOR CITY PROJECTS

APPENDICES

Appendix A	General Acts Accepted by City Council of Quincy
Appendix B	General Acts Accepted by Citizens of Quincy
Appendix C	Special Acts Applicable to Quincy
Appendix D	Special Acts Accepted by City Council of Quincy
Appendix E	Special Acts Accepted by Citizens of Quincy
Appendix F	Statutory References

Quick Links

Select a Quick Link

Online Services & Forms

For Business

For Residents

For Visitors

Inspectional Services Links

Zoning Ordinances

Section One: Purpose and Authority

Section Two: Districts

Section Three: Use Regulations

Section Four: Dimensional Regulations

Section Five: General Regulations

Section Six: Special Regulations

Section Seven: Special Residential Regulations

Zoning Ordinances

Thank you for visiting the City of Quincy Zoning Ordinance Page. Mayor Koch commissioned the biggest overhaul of the City's Zoning Code in a generation, and the process was completed in the summer of 2011.

We have divided the zoning code into sections, with links below and on the left sidebar. To access the full .pdf Zoning Ordinance document, click here.

If you have any questions about zoning, please contact Jay Duca, Director of Inspectional Services, at 617-376-1456, or email him at jduca@quincyma.gov.

Section One: Purpose and Authority

Section Two: Districts

Section Three: Use Regulations

Section Four: Dimensional Regulations

Section Five: General Regulations

Section Six: Special Regulations

Section Seven: Special Residential Regulations

Section Eight: Special Districts

Section Nine: Administration and Procedures

Section Ten: Definitions

City of Quincy, Massachusetts

Zoning Code

Mayor Thomas P. Koch
Quincy, Massachusetts
Updated ~ June 2011

QUINCY ZONING ORDINANCE
June 14, 2011

TABLE OF CONTENTS

1.0 PURPOSE AND AUTHORITY 1

1.1 TITLE 1

1.2 PURPOSE 1

1.3 AUTHORITY 2

1.4 SCOPE 2

1.5 APPLICABILITY 2
1.5.1 Commencement of Construction or Operation 2

1.6 AMENDMENTS 2

1.7 SEPARABILITY 2

2.0 DISTRICTS 3

2.1 ESTABLISHMENT 3
2.1.1 General 3
2.1.2 Special Districts 3

2.2 MAP 3
2.2.1 Establishment 3
2.2.2 District Boundaries; Uncertainties and Resolution 4

3.0 USE REGULATIONS 5

3.1 PRINCIPAL USES 5
3.1.1 Symbols 5
3.1.2 Applicability 5
3.1.3 Major Nonresidential Use 5
3.1.4 Table of Use Regulations 5

3.2	**ACCESSORY USES AND STRUCTURES**	**5**
3.2.1	**General**	**5**
3.2.2	**Accessory Uses; All Districts**	**6**
3.2.3	**Accessory Uses in the Residence Districts**	**6**
3.2.4	**Accessory Uses in the Business and Industrial Districts**	**7**
3.3	**HOME OCCUPATIONS**	**8**
3.3.1	**Home Occupation - As of Right**	**8**
3.3.2	**Home Occupation - By Special Permit**	**8**
3.4	**NONCONFORMING USES AND STRUCTURES**	**9**
3.4.1	**Applicability**	**9**
3.4.2	**Nonconforming Uses**	**9**
3.4.3	**Nonconforming Structures**	**9**
3.4.4	**Variance Required**	**9**
3.4.5	**Nonconforming Single and Two Family Residential Structures**	**10**
3.4.6	**Abandonment or Non-Use**	**10**
3.4.7	**Catastrophe or Demolition**	**10**
3.4.8	**Reversion to Nonconformity**	**11**
4.0	**DIMENSIONAL REGULATIONS**	**12**
4.1	**TABLE OF DIMENSIONAL REQUIREMENTS**	**12**
4.1.1	**Conformance**	**12**
4.1.2	**Notes to Table**	**13**
4.2	**GENERAL REQUIREMENTS**	**13**
4.2.1	**Urban Renewal Use**	**13**
4.2.2	**Lot or Yard Areas**	**14**
4.2.3	**Dwelling Unit Equivalents**	**14**
4.2.4	**Building Bulk**	**14**
4.2.5	**Lot Size, Area and Width**	**14**
4.2.6	**Minimum Frontage and Width**	**14**
4.2.7	**Open Space**	**14**
4.2.8	**Fences and Hedges**	**14**
4.3	**YARDS**	**14**
4.3.1	**Urban Renewal Use**	**15**
4.3.2	**Minimum Requirements**	**15**
4.3.3	**Appurtenances Projecting into Yards**	**15**
4.3.4	**Certain Structures**	**15**
4.3.5	**Front Yard Requirements for Lots Abutting More Than One Street**	**15**
4.3.6	**Exceptions to Yard Regulations**	**15**

4.4	**SPECIAL REQUIREMENTS**	**16**
4.4.1	**Urban Renewal Use**	**16**
4.4.2	**Exceptions to Height Requirements**	**16**
4.4.3	**Certain Districts Abutting Residence Districts**	**16**
5.0	**GENERAL REGULATIONS**	**17**
5.1	**OFF-STREET PARKING**	**17**
5.1.1	**Location**	17
5.1.2	**Ownership or Control**	**17**
5.1.3	**Ownership; Two or More Buildings**	**17**
5.1.4	**Setbacks**	**17**
5.1.5	**Prohibited Uses**	**18**
5.1.6	**Lighting**	**18**
5.1.7	**Parking Space Requirements**	**18**
5.1.8	**Table of Off-Street Parking Requirements**	**18**
5.1.9	**Notes to Table of Off-Street Parking Requirements**	**19**
5.1.10	**Driveway Grades**	**20**
5.1.11	**Parking Spaces**	**20**
5.1.12	**Construction**	**20**
5.1.13	**Landscaping Requirements for Parking Areas**	**21**
5.1.14	**Paving Permit**	**21**
5.1.15	**Paving Contractor Licensing**	**22**
5.1.16	**Paving of Yards**	**22**
5.1.17	**Special Permit**	**22**
5.2	**LOADING FACILITIES**	**23**
5.2.1	**Requirements**	**23**
5.2.2	**Proximity to Residence Districts**	**24**
5.2.3	**Accessory Driveways**	**24**
5.2.4	**Serving Two or More Facilities**	**24**
5.2.5	**Reduction in Size**	**24**
5.2.6	**Special Permit**	**24**
5.3	**SIGNS**	**24**
5.3.1	**Definitions**	**24**
5.3.2	**Applicability**	**24**
5.3.3	**Exemptions**	**24**
5.3.4	**Prohibited Signs; Performance Standards**	**25**
5.3.5	**Prohibited Signs; By Type**	**25**
5.3.6	**Signs Authorized by Special Permit**	**26**
5.3.7	**General Sign Standards**	**26**

5.3.8 Specific Types of Signs; Standards 27
5.3.9 Special Regulations; Contiguous Commercial Areas 31
5.3.10 Design Standards; Contiguous Commercial Areas 34
5.3.11 Special Regulations; Commercial Arterial Areas 35
5.3.12 Administration and Enforcement 36
5.3.13 Special Permit 37

5.4 PERFORMANCE STANDARDS 37
5.4.1 Lighting 38
5.4.2 Fencing and Screening in the Industrial and Business Districts 38
5.4.3 Screening Adjacent to Residential Districts 38
5.4.4 Maintenance and Replacement 38
5.4.5 Urban Renewal Use 38

6.0 SPECIAL REGULATIONS 39

6.1 MOTOR VEHICLE SERVICE STATIONS 39
6.1.1 Dimensional Requirements 39
6.1.2 Driveways 39
6.1.3 Standards 39

6.2 EARTH REMOVAL 40
6.2.1 General 40
6.2.2 Procedures 40
6.2.3 Conditions and Restrictions 40
6.2.4 Time Limits; Performance Guarantee 41
6.2.5 Exceptions 41

6.3 TRAFFIC VISIBILITY ACROSS CORNERS 42
6.3.1 General 42
6.3.2 Urban Renewal Use 42

6.4 ADULT USES 42
6.4.1 Purpose 42
6.4.2 General 42
6.4.3 Prohibition 42
6.4.4 Separation 42

6.5 BODY ART ESTABLISHMENTS. 43
6.5.1 General 43
6.5.2 Conditions 43

6.6 WIRELESS COMMUNICATIONS FACILITIES 43
6.6.1 Purpose 43

6.6.2 Location **43**
6.6.3 Special Permit **43**
6.6.4 Contents of Application **43**
6.6.5 Procedures; Balloon Test **45**
6.6.6 Independent Review **46**
6.6.7 Criteria; Special Permit **46**
6.6.8 Conditions **46**
6.6.9 Abandonment **47**
6.6.10 Term **48**
6.6.11 Insurance **48**
6.6.12 Compliance with Other Laws **48**
6.6.13 Maintenance **48**
6.6.14 Indemnification **49**
6.6.15 Exemptions **49**

6.7 WIND FACILITIES **49**
6.7.1 Purpose **49**
6.7.2 Applicability **49**
6.7.3 Application Procedures **50**
6.7.4 Zoning Districts **51**
6.7.5 Compliance with Laws, Ordinances and Regulations **52**
6.7.6 Insurance **52**
6.7.7 Site Control **52**
6.7.8 General Siting Standards **52**
6.7.9 Lighting, Signage, Utilities and Other Structures **52**
6.7.10 Utility Connections **53**
6.7.11 Appurtenant Structures **53**
6.7.12 Ancillary Structures **53**
6.7.13 Support Towers **53**
6.7.14 Safety, Aesthetic and Environmental Standards **53**
6.7.15 Waiver of Setbacks, Sound and Shadow Flicker Provisions. **54**
6.7.16 Facility Conditions **55**
6.7.17 Abandonment or Decommissioning **55**
6.7.18 Financial Surety **56**
6.7.19 Term of Special Permit **56**
6.7.20 Notice of Operation **56**
6.7.21 Public Inquiries and Complaints **56**

6.8 SATELLITE RECEIVING ANTENNA **56**
6.8.1 Small Dishes **56**
6.8.2 Large Dishes **56**
6.8.3 Requirements for Large Dishes **56**

7.0 SPECIAL RESIDENTIAL REGULATIONS **58**

7.1	**AFFORDABLE HOUSING ORDINANCE**	**58**
7.1.1	**Applicability**	**58**
7.1.2	**Requirements**	**58**
7.1.3	**Affordable Housing Trust Committee**	**58**
7.1.4	**Monitoring Compliance with AHTC Conditions**	**60**
7.1.5	**Fractional Dwelling Unit**	**62**
7.1.6	**Construction of Affordable Housing Units**	**62**
7.1.7	**Standards for Construction and Occupancy of Affordable Units**	**63**
7.1.8	**Occupancy**	**63**
7.1.9	**Affordable Housing Trust Committee**	**63**
7.1.10	**Income Eligible Households**	**64**
7.1.11	**Subsequent Sales**	**65**
7.1.12	**Affordable Housing Trust Fund**	**67**
7.1.13	**Adoption of Prior Acts**	**67**

8.0 SPECIAL DISTRICTS **68**

8.1	**FLOOD PLAIN OVERLAY DISTRICT**	**68**
8.1.1	**Purpose**	**68**
8.1.2	**Location**	**68**
8.1.3	**Overlay District**	**68**
8.1.4	**Duties of Building Commissioner**	**68**
8.1.5	**Use Regulations**	**68**
8.1.6	**Coastal High Hazard Areas**	**69**
8.1.7	**Floodway**	**69**
8.1.8	**National Flood Insurance Program**	**69**
8.1.9	**Special Permit**	**69**
8.1.10	**Variances**	**70**
8.2	**OPEN SPACE DISTRICT**	**71**
8.2.1	**Purpose**	**71**
8.2.2	**Regulations**	**71**
8.2.3	**Public Agencies**	**71**
8.3	**QUINCY CENTER DISTRICTS**	**71**
8.3.1	**Purpose**	**71**
8.3.2	**Available Uses; Special Permit Required**	**72**
8.3.3	**Dimensional Requirements**	**74**
8.3.4	**Off-Street Parking**	**74**
8.3.5	**[Reserved]**	**75**
8.3.6	**Site Plan Review**	**75**
8.3.7	**Special Permit Granting Authority**	**75**
8.3.8	**Special Permit and Site Plan Approval Criteria**	**75**

8.3.9 Public Art and Place-Making Program 77
8.3.10 Public Art Commission 77
8.3.11 Powers and Duties of Commission 77
8.3.12 On-site and Off-site Contributions 77
8.3.13 Public Art Fund 78
8.3.14 Public Art and Place-Making Program Guidelines 78

8.4 PLANNED UNIT DEVELOPMENT DISTRICTS 78
8.4.1 Permitted Uses 78
8.4.2 Dimensional Requirements 79
8.4.3 Off-Street Parking 79
8.4.4 Off-Street Loading 79
8.4.5 Location of Structures; Open Space 79
8.4.6 Special Permit Required 80
8.4.7 Age Restricted Housing 80
8.4.8 Congregate Elderly Facility 80
8.4.9 Congregate Elderly Facility; Dimensional Requirements 80
8.4.10 Congregate Elderly Facility; Special Permit 81
8.4.11 Congregate Elderly Facility; Required Facilities 81
8.4.12 Congregate Elderly Facility; Transportation 81

9.0 ADMINISTRATION AND PROCEDURES 82

9.1 GENERAL 82
9.1.1 Building Commissioner 82
9.1.2 Building Permit 82
9.1.3 Enforcement 82
9.1.4 Certificate of Occupancy 82
9.1.5 Grievances 83
9.1.6 Appeal to Board of Appeals 83
9.1.7 Penalties 83

9.2 BOARD OF APPEALS 83
9.2.1 Establishment 83
9.2.2 Powers 83
9.2.3 Procedures 84
9.2.4 Conditions 84
9.2.5 Regulations 84
9.2.6 Fees 84

9.3 PLANNING BOARD 84
9.3.1 Establishment 84
9.3.2 Powers 84
9.3.3 Rules and Regulations 84

9.3.4 Fees **85**

9.4 SPECIAL PERMITS **85**
9.4.1 Special Permit Granting Authority **85**
9.4.2 Criteria **85**
9.4.3 Procedures **85**
9.4.4 Conditions **85**
9.4.5 Plans **85**
9.4.6 Lapse **86**
9.4.7 Regulations **86**
9.4.8 Fees **86**

9.5 SITE PLAN REVIEW **86**
9.5.1 Applicability **86**
9.5.2 Procedures **86**
9.5.3 Preparation of Plans; Contents **87**
9.5.4 Waiver **88**
9.5.5 Approval **88**
9.5.6 Existing Residential Structures **89**
9.5.7 Lapse **90**
9.5.8 Regulations; Fees **90**
9.5.9 Appeal **90**

9.6 ZONING ADMINISTRATOR **90**

10.0 DEFINITIONS **91**

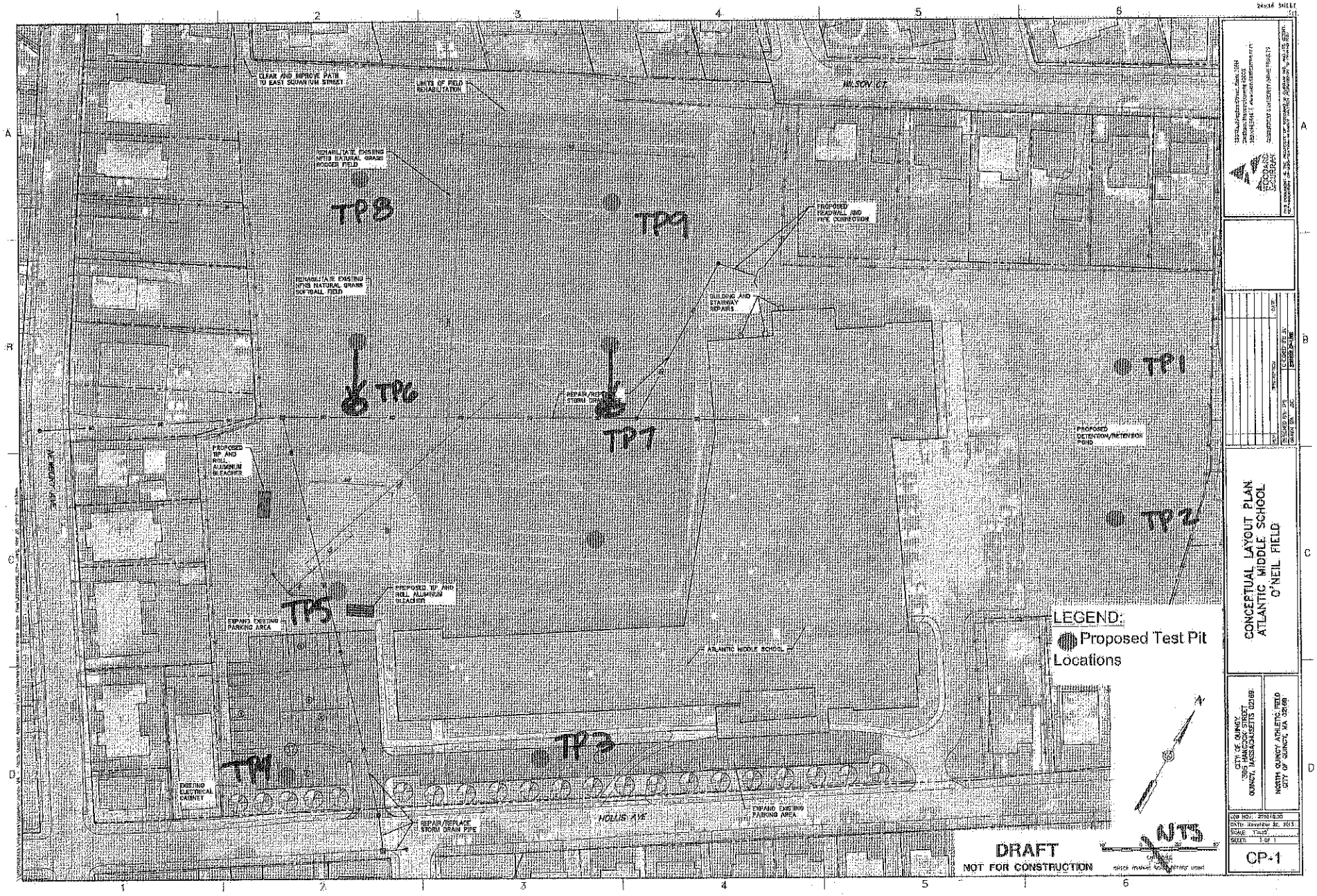
CLEAN AND IMPROVE PATH TO EAST SQUANTUM STREET
MIN OF FIELD REHABILITATION
HILTON CT.
REHABILITATE EXISTING NFHS NATURAL GRASS SOCCER FIELD
REHABILITATE EXISTING NFHS NATURAL GRASS SOFTBALL FIELD
PROPOSED HEADWALL AND PIPE CONNECTION
BUILDING AND STAIRWAY REPAIRS
REPAIR/REPLACE STORM DRAIN
PROPOSED DETENTION/RETENTION POND
PROPOSED 10' AND ROLL ALUMINUM BLEACHER
EXPAND EXISTING PARKING AREA
ATLANTIC MIDDLE SCHOOL
EXISTING ELECTRICAL CABINET
HOLLIS AVE
TP1
TP2
TP3
TP4
TP5
TP6
TP7
TP8
TP9
LEGEND:
Proposed Test Pit Locations
DRAFT
NOT FOR CONSTRUCTION
NTS
CONCEPTUAL LAYOUT PLAN
ATLANTIC MIDDLE SCHOOL
O'NEIL FIELD
CITY OF QUINCY
NORTH QUINCY ATHLETIC FIELD
CITY OF QUINCY, MA 02169
CP-1

Commonwealth of Massachusetts
City/Town of Quincy

Form 11 - Soil Suitability Assessment for On-Site Sewage Disposal

A. Facility Information

City of Quincy
Owner Name

86 Hollis Ave.
Street Address

Map/Lot #

Quincy
City

MA
State

Zip Code

B. Site Information

1. (Check one) ☐ New Construction ☐ Upgrade ☐ Repair

2. Soil Survey Available? ☒ Yes ☐ No If yes: NRCS web soil survey (Source) 626B (Soil Map Unit)

   Merimac-Urban Land Complex (Soil Name) Human Transported Material (Soil Limitations)

3. Surficial Geological Report Available? ☒ Yes ☐ No If yes: MassGIS (Year Published/Source) Publication Scale Sand & Grvl (Map Unit)

   Coarse-Loamy Eolian deposits (Geologic/Parent Material) Outwash Plain (Landform)

4. Flood Rate Insurance Map

   Above the 500-year flood boundary? ☒ Yes ☐ No Within the 100-year flood boundary? ☐ Yes ☒ No

   Within the 500-year flood boundary? ☐ Yes ☒ No Within a velocity zone? ☐ Yes ☒ No

5. Wetland Area: Wetlands Conservancy Program Map N/A (Map Unit) Name

6. Current Water Resource Conditions (USGS): 12-13 (Month/Year) Range: ☐ Above Normal ☐ Normal ☒ Below Normal

7. Other references reviewed:

Commonwealth of Massachusetts
City/Town of Quincy

Form 11 - Soil Suitability Assessment for On-Site Sewage Disposal

C. On-Site Review (*minimum of two holes required at every proposed primary and reserved disposal area)*

Deep Observation Hole Number: 1 | 12/23/2013 (Date) | 7:30 am (Time) | cold (38 degrees) with some rain (Weather)

1. Location

Ground Elevation at Surface of Hole: _____ Location (identify on plan): _____

2. Land Use: Vacant lot (e.g., woodland, agricultural field, vacant lot, etc.) | none (Surface Stones) | 1-2 (Slope (%))

grass (Vegetation) | outwash plain (Landform) | shoulder (Position on Landscape (attach sheet))

3. Distances from:

Open Water Body	_____ feet	Drainage Way	_____ feet	Possible Wet Area	50 feet
Property Line	50 feet	Drinking Water Well	_____ feet	Other	_____ feet

4. Parent Material: _____ Unsuitable Materials Present: ☒ Yes ☐ No

If Yes: ☐ Disturbed Soil ☒ Fill Material ☐ Impervious Layer(s) ☐ Weathered/Fractured Rock ☐ Bedrock

5. Groundwater Observed: ☒ Yes ☐ No If yes: _____ Depth Weeping from Pit | 48" Depth Standing Water in Hole

Estimated Depth to High Groundwater: _____ inches _____ elevation

Commonwealth of Massachusetts
City/Town of Quincy

Form 11 - Soil Suitability Assessment for On-Site Sewage Disposal

C. On-Site Review (continued)

Deep Observation Hole Number: 1

Depth (in.)	Soil Horizon/ Layer	Soil Matrix: Color-Moist (Munsell)	Redoximorphic Features (mottles)			Soil Texture (USDA)	Coarse Fragments % by Volume		Soil Structure	Soil Consistence (Moist)	Other
			Depth	Color	Percent		Gravel	Cobbles & Stones			
0-12	Ap	10YR 3/2				sandy loam			structure-less	friable	
12-36	HTM										
36-120	Peat	5Y 2.5/1				silt loam			structure-less	friable	

Additional Notes:

Commonwealth of Massachusetts
City/Town of Quincy
Form 11 - Soil Suitability Assessment for On-Site Sewage Disposal

C. On-Site Review (continued)

Deep Observation Hole Number: 2 | 12/23/2013 (Date) | 8:15 am (Time) | cold with some rain (38 degrees) (Weather)

1. Location

Ground Elevation at Surface of Hole: _____ Location (identify on plan): _____

2. Land Use: Vacant Lot (e.g., woodland, agricultural field, vacant lot, etc.) | none (Surface Stones) | 1-2 (Slope (%))

Grass (Vegetation) | outwash plain (Landform) | shoulder (Position on Landscape (attach sheet))

3. Distances from:

Open Water Body	_____ feet	Drainage Way	_____ feet	Possible Wet Area	30 feet
Property Line	50 feet	Drinking Water Well	_____ feet	Other	_____ feet

4. Parent Material: _____ Unsuitable Materials Present: ☒ Yes ☐ No

If Yes: ☐ Disturbed Soil ☒ Fill Material ☐ Impervious Layer(s) ☐ Weathered/Fractured Rock ☐ Bedrock

5. Groundwater Observed: ☒ Yes ☐ No If yes: 23" (Depth Weeping from Pit) _____ (Depth Standing Water in Hole)

Estimated Depth to High Groundwater: _____ inches _____ elevation

Commonwealth of Massachusetts
City/Town of Quincy

Form 11 - Soil Suitability Assessment for On-Site Sewage Disposal

C. On-Site Review (continued)

Deep Observation Hole Number: 2

Depth (in.)	Soil Horizon/ Layer	Soil Matrix: Color-Moist (Munsell)	Redoximorphic Features (mottles)			Soil Texture (USDA)	Coarse Fragments % by Volume		Soil Structure	Soil Consistence (Moist)	Other
			Depth	Color	Percent		Gravel	Cobbles & Stones			
0-6	Ap	10YR 3/3				sandy loam			structure-less	friable	
6-21	-	10YR 5/4	21	2.5YR 4/6		fine loamy sand			structure-less	firm	
21-81	HTM										
81-120	A	10YR 5/2				sand			structure-less	friable	

Additional Notes:

D. Determination of High Groundwater Elevation

1. Method Used:

☒ Depth observed standing water in observation hole	A. 48" (TP 1) inches	B. inches
☒ Depth weeping from side of observation hole	A. inches	B. 23" (TP 2) inches
☐ Depth to soil redoximorphic features (mottles)	A. inches	B. 21" (TP 2) inches
☐ Groundwater adjustment (USGS methodology)	A. inches	B. inches

2. _____ Index Well Number _____ Reading Date _____ Index Well Level

_____ Adjustment Factor _____ Adjusted Groundwater Level

E. Depth of Pervious Material

1. Depth of Naturally Occurring Pervious Material
   a. Does at least four feet of naturally occurring pervious material exist in all areas observed throughout the area proposed for the soil absorption system?

      ☐ Yes ☒ No

   b. If yes, at what depth was it observed? Upper boundary: _____ inches Lower boundary: _____ inches

Commonwealth of Massachusetts
City/Town of Quincy

Form 11 - Soil Suitability Assessment for On-Site Sewage Disposal

F. Certification

I certify that I am currently approved by the Department of Environmental Protection pursuant to 310 CMR 15.017 to conduct soil evaluations and that the above analysis has been performed by me consistent with the required training, expertise and experience described in 310 CMR 15.017. I further certify that the results of my soil evaluation, as indicated in the attached Soil Evaluation Form, are accurate and in accordance with 310 CMR 15.100 through 15.107.

Signature of Soil Evaluator	Date
Hernan Peralta / SE 12736 Typed or Printed Name of Soil Evaluator / License #	Date of Soil Evaluator Exam
Name of Board of Health Witness	Board of Health

Note: In accordance with 310 CMR 15.018(2) this form must be submitted to the approving authority within 60 days of the date of field testing, and to the designer and the property owner with Percolation Test Form 12.

Field Diagrams

Use this sheet for field diagrams:

Commonwealth of Massachusetts
City/Town of Quincy

Form 11 - Soil Suitability Assessment for On-Site Sewage Disposal

A. Facility Information

City of Quincy
Owner Name

86 Hollis Ave.
Street Address

Map/Lot #

Quincy
City

MA
State

Zip Code

B. Site Information

1. (Check one) ☐ New Construction ☐ Upgrade ☐ Repair

2. Soil Survey Available? ☒ Yes ☐ No If yes: NRCS web soil survey (Source) 626B (Soil Map Unit)

   Merimac-Urban Land Complex (Soil Name)

   Human Transported Material (Soil Limitations)

3. Surficial Geological Report Available? ☒ Yes ☐ No If yes: MassGIS (Year Published/Source) Publication Scale Sand & Grvl (Map Unit)

   Coarse-Loamy Eolian deposits (Geologic/Parent Material)

   Outwash Plain (Landform)

4. Flood Rate Insurance Map

   Above the 500-year flood boundary? ☒ Yes ☐ No

   Within the 100-year flood boundary? ☐ Yes ☒ No

   Within the 500-year flood boundary? ☐ Yes ☒ No

   Within a velocity zone? ☐ Yes ☒ No

5. Wetland Area: Wetlands Conservancy Program Map N/A (Map Unit) Name

6. Current Water Resource Conditions (USGS): 12-13 (Month/Year) Range: ☐ Above Normal ☐ Normal ☒ Below Normal

7. Other references reviewed:

Commonwealth of Massachusetts
City/Town of Quincy

Form 11 - Soil Suitability Assessment for On-Site Sewage Disposal

C. On-Site Review (*minimum of two holes required at every proposed primary and reserved disposal area)*

Deep Observation Hole Number: 3 | 12/23/2013 (Date) | 9:30 am (Time) | cold (38 degrees) with rain (Weather)

1. Location

Ground Elevation at Surface of Hole: _____ Location (identify on plan): _____

2. Land Use: Developed (e.g., woodland, agricultural field, vacant lot, etc.) | none (Surface Stones) | 1-2 (Slope (%))

grass (Vegetation) | outwash plain (Landform) | shoulder (Position on Landscape (attach sheet))

3. Distances from:

Open Water Body	____ feet	Drainage Way	____ feet	Possible Wet Area	____ feet
Property Line	____ feet	Drinking Water Well	____ feet	Other	____ feet

4. Parent Material: _____ Unsuitable Materials Present: ☒ Yes ☐ No

If Yes: ☐ Disturbed Soil ☒ Fill Material ☐ Impervious Layer(s) ☐ Weathered/Fractured Rock ☐ Bedrock

5. Groundwater Observed: ☒ Yes ☐ No If yes: _____ Depth Weeping from Pit _____ Depth Standing Water in Hole

Estimated Depth to High Groundwater: _____ inches _____ elevation

Commonwealth of Massachusetts
City/Town of Quincy

Form 11 - Soil Suitability Assessment for On-Site Sewage Disposal

C. On-Site Review (continued)

Deep Observation Hole Number: 3

Depth (in.)	Soil Horizon/ Layer	Soil Matrix: Color-Moist (Munsell)	Redoximorphic Features (mottles)			Soil Texture (USDA)	Coarse Fragments % by Volume		Soil Structure	Soil Consistence (Moist)	Other
			Depth	Color	Percent		Gravel	Cobbles & Stones			
0-6	Ap	10YR 3/3				sandy loam			structure-less	friable	
6-12	-	10YR 4/4				loamy sand			structure-less	firm	
12-42	-	10YR 5/3				fine sand			structure-less	firm	
42-120	HTM										

Additional Notes:

Commonwealth of Massachusetts
City/Town of Quincy

Form 11 - Soil Suitability Assessment for On-Site Sewage Disposal

C. On-Site Review (continued)

Deep Observation Hole Number: 4 | 12/23/2013 (Date) | 10:30 am (Time) | cold with rain (38 degrees) (Weather)

1. Location

Ground Elevation at Surface of Hole: _____ Location (identify on plan): _____

2. Land Use: Developed (e.g., woodland, agricultural field, vacant lot, etc.) | none (Surface Stones) | 1-2 (Slope (%))

Grass (Vegetation) | _____ (Landform) | _____ (Position on Landscape (attach sheet))

3. Distances from:

Open Water Body	_____ feet	Drainage Way	_____ feet	Possible Wet Area	_____ feet
Property Line	_____ feet	Drinking Water Well	_____ feet	Other	_____ feet

4. Parent Material: _____ Unsuitable Materials Present: ☒ Yes ☐ No

If Yes: ☐ Disturbed Soil ☒ Fill Material ☐ Impervious Layer(s) ☐ Weathered/Fractured Rock ☐ Bedrock

5. Groundwater Observed: ☒ Yes ☐ No If yes: 60" (Depth Weeping from Pit) | _____ (Depth Standing Water in Hole)

Estimated Depth to High Groundwater: _____ inches _____ elevation

Commonwealth of Massachusetts
City/Town of Quincy

Form 11 - Soil Suitability Assessment for On-Site Sewage Disposal

C. On-Site Review (continued)

Deep Observation Hole Number: 4

Depth (in.)	Soil Horizon/ Layer	Soil Matrix: Color-Moist (Munsell)	Redoximorphic Features (mottles)			Soil Texture (USDA)	Coarse Fragments % by Volume		Soil Structure	Soil Consistence (Moist)	Other
			Depth	Color	Percent		Gravel	Cobbles & Stones			
0-6	Ap	10YR 5/3				sandy loam			structure-less	friable	
6-54	HTM										debris, ash
54-120	Peat	5Y 2.5/1				silt loam			structure-less	friable	

Additional Notes:

D. Determination of High Groundwater Elevation

1. Method Used:

☐ Depth observed standing water in observation hole	A. _____ inches	B. _____ inches
☒ Depth weeping from side of observation hole	A. _____ inches	B. 60" (TP 4) inches
☐ Depth to soil redoximorphic features (mottles)	A. _____ inches	B. _____ inches
☐ Groundwater adjustment (USGS methodology)	A. _____ inches	B. _____ inches

2. _____ Index Well Number _____ Reading Date _____ Index Well Level

_____ Adjustment Factor _____ Adjusted Groundwater Level

E. Depth of Pervious Material

1. Depth of Naturally Occurring Pervious Material
   a. Does at least four feet of naturally occurring pervious material exist in all areas observed throughout the area proposed for the soil absorption system?

      ☐ Yes ☒ No

   b. If yes, at what depth was it observed? Upper boundary: _____ inches Lower boundary: _____ inches

Commonwealth of Massachusetts
City/Town of Quincy

Form 11 - Soil Suitability Assessment for On-Site Sewage Disposal

F. Certification

I certify that I am currently approved by the Department of Environmental Protection pursuant to 310 CMR 15.017 to conduct soil evaluations and that the above analysis has been performed by me consistent with the required training, expertise and experience described in 310 CMR 15.017. I further certify that the results of my soil evaluation, as indicated in the attached Soil Evaluation Form, are accurate and in accordance with 310 CMR 15.100 through 15.107.

Signature of Soil Evaluator	Date
Hernan Peralta / SE 12736 Typed or Printed Name of Soil Evaluator / License #	Date of Soil Evaluator Exam
Name of Board of Health Witness	Board of Health

Note: In accordance with 310 CMR 15.018(2) this form must be submitted to the approving authority within 60 days of the date of field testing, and to the designer and the property owner with Percolation Test Form 12.

Field Diagrams

Use this sheet for field diagrams:

Commonwealth of Massachusetts
City/Town of Quincy

Form 11 - Soil Suitability Assessment for On-Site Sewage Disposal

A. Facility Information

City of Quincy
Owner Name

86 Hollis Ave.
Street Address

Map/Lot #

Quincy
City

MA
State

Zip Code

B. Site Information

1. (Check one) ☐ New Construction ☐ Upgrade ☐ Repair

2. Soil Survey Available? ☒ Yes ☐ No If yes: NRCS web soil survey (Source) 602 (Soil Map Unit)

   Urban Land (Soil Name)

   Human Transported Material (Soil Limitations)

3. Surficial Geological Report Available? ☒ Yes ☐ No If yes: MassGIS (Year Published/Source) Publication Scale Map Unit

   Geologic/Parent Material

   Landform

4. Flood Rate Insurance Map

   Above the 500-year flood boundary? ☒ Yes ☐ No

   Within the 100-year flood boundary? ☐ Yes ☒ No

   Within the 500-year flood boundary? ☐ Yes ☒ No

   Within a velocity zone? ☐ Yes ☒ No

5. Wetland Area: Wetlands Conservancy Program Map N/A (Map Unit) Name

6. Current Water Resource Conditions (USGS): 12-13 (Month/Year) Range: ☐ Above Normal ☐ Normal ☒ Below Normal

7. Other references reviewed:

Commonwealth of Massachusetts
City/Town of Quincy

Form 11 - Soil Suitability Assessment for On-Site Sewage Disposal

C. On-Site Review (*minimum of two holes required at every proposed primary and reserved disposal area)*

Deep Observation Hole Number: 5 | 12/30/2013 (Date) | 2:00 pm (Time) | cold (35 degrees) (Weather)

1. Location

Ground Elevation at Surface of Hole: _____ Location (identify on plan): _____

2. Land Use: Developed (e.g., woodland, agricultural field, vacant lot, etc.) | none (Surface Stones) | 1-2 (Slope (%))

grass (Vegetation) | _____ (Landform) | _____ (Position on Landscape (attach sheet))

3. Distances from:

Open Water Body	____ feet	Drainage Way	____ feet	Possible Wet Area	____ feet
Property Line	____ feet	Drinking Water Well	____ feet	Other	____ feet

4. Parent Material: _____ Unsuitable Materials Present: ☒ Yes ☐ No

If Yes: ☐ Disturbed Soil ☒ Fill Material ☐ Impervious Layer(s) ☐ Weathered/Fractured Rock ☐ Bedrock

5. Groundwater Observed: ☒ Yes ☐ No If yes: 90" (Depth Weeping from Pit) | _____ (Depth Standing Water in Hole)

Estimated Depth to High Groundwater: _____ inches _____ elevation

Commonwealth of Massachusetts
City/Town of Quincy

Form 11 - Soil Suitability Assessment for On-Site Sewage Disposal

C. On-Site Review (continued)

Deep Observation Hole Number: 5

Depth (in.)	Soil Horizon/ Layer	Soil Matrix: Color-Moist (Munsell)	Redoximorphic Features (mottles)			Soil Texture (USDA)	Coarse Fragments % by Volume		Soil Structure	Soil Consistence (Moist)	Other
			Depth	Color	Percent		Gravel	Cobbles & Stones			
0-4	Ap	10YR 5/3				sandy loam			structure-less	friable	
4-8	-	10YR 5/4				loamy sand			structure-less	firm	
8-20	-	10YR 3/2				sand loam	2		structure-less	firm	
20-38	-	5YR 4/1				fine sand			structure-less	firm	
38-44	-	10YR 3/2				sandy loam			structure-less	firm	
44-59	-	10YR 5/3				loamy sand	5		structure-less	firm	
59-84	HTM									firm	

Additional Notes:

Commonwealth of Massachusetts
City/Town of Quincy

Form 11 - Soil Suitability Assessment for On-Site Sewage Disposal

C. On-Site Review (continued)

Deep Observation Hole Number: 5 | 12/30/2013 (Date) | 2:00 Pm (Time) | cold (35 degrees) (Weather)

1. Location

Ground Elevation at Surface of Hole: _____ Location (identify on plan): _____

2. Land Use: Developed (e.g., woodland, agricultural field, vacant lot, etc.) | none (Surface Stones) | 1-2 (Slope (%))

Grass (Vegetation) | _____ (Landform) | _____ (Position on Landscape (attach sheet))

3. Distances from:

Open Water Body	_____ feet	Drainage Way	_____ feet	Possible Wet Area	_____ feet
Property Line	_____ feet	Drinking Water Well	_____ feet	Other	_____ feet

4. Parent Material: _____ Unsuitable Materials Present: ☒ Yes ☐ No

If Yes: ☐ Disturbed Soil ☒ Fill Material ☐ Impervious Layer(s) ☐ Weathered/Fractured Rock ☐ Bedrock

5. Groundwater Observed: ☒ Yes ☐ No If yes: 90" (Depth Weeping from Pit) | _____ (Depth Standing Water in Hole)

Estimated Depth to High Groundwater: _____ inches _____ elevation

Commonwealth of Massachusetts
City/Town of Quincy

Form 11 - Soil Suitability Assessment for On-Site Sewage Disposal

C. On-Site Review (continued)

Deep Observation Hole Number: 5 (continued)

Depth (in.)	Soil Horizon/ Layer	Soil Matrix: Color-Moist (Munsell)	Redoximorphic Features (mottles)			Soil Texture (USDA)	Coarse Fragments % by Volume		Soil Structure	Soil Consistence (Moist)	Other
			Depth	Color	Percent		Gravel	Cobbles & Stones			
84-90	Peat	5Y 2.5/1								friable	

Additional Notes:

Commonwealth of Massachusetts
City/Town of Quincy

Form 11 - Soil Suitability Assessment for On-Site Sewage Disposal

D. Determination of High Groundwater Elevation

1. Method Used:

☐ Depth observed standing water in observation hole	A. _____ inches	B. _____ inches
☒ Depth weeping from side of observation hole	A. 90" (TP 5) inches	B. _____ inches
☐ Depth to soil redoximorphic features (mottles)	A. _____ inches	B. _____ inches
☐ Groundwater adjustment (USGS methodology)	A. _____ inches	B. _____ inches

2. _____ Index Well Number _____ Reading Date _____ Index Well Level

_____ Adjustment Factor _____ Adjusted Groundwater Level

E. Depth of Pervious Material

1. Depth of Naturally Occurring Pervious Material
   a. Does at least four feet of naturally occurring pervious material exist in all areas observed throughout the area proposed for the soil absorption system?

      ☐ Yes ☒ No

   b. If yes, at what depth was it observed? Upper boundary: _____ inches Lower boundary: _____ inches

Commonwealth of Massachusetts
City/Town of Quincy

Form 11 - Soil Suitability Assessment for On-Site Sewage Disposal

F. Certification

I certify that I am currently approved by the Department of Environmental Protection pursuant to 310 CMR 15.017 to conduct soil evaluations and that the above analysis has been performed by me consistent with the required training, expertise and experience described in 310 CMR 15.017. I further certify that the results of my soil evaluation, as indicated in the attached Soil Evaluation Form, are accurate and in accordance with 310 CMR 15.100 through 15.107.

Signature of Soil Evaluator	Date
Hernan Peralta / SE 12736 Typed or Printed Name of Soil Evaluator / License #	Date of Soil Evaluator Exam
Name of Board of Health Witness	Board of Health

Note: In accordance with 310 CMR 15.018(2) this form must be submitted to the approving authority within 60 days of the date of field testing, and to the designer and the property owner with Percolation Test Form 12.

Field Diagrams

Use this sheet for field diagrams:

Commonwealth of Massachusetts
City/Town of Quincy

Form 11 - Soil Suitability Assessment for On-Site Sewage Disposal

A. Facility Information

City of Quincy
Owner Name

86 Hollis Ave.
Street Address

Map/Lot #

Quincy
City

MA
State

Zip Code

B. Site Information

1. (Check one) ☐ New Construction ☐ Upgrade ☐ Repair

2. Soil Survey Available? ☒ Yes ☐ No If yes: NRCS web soil survey (Source) 654 (Soil Map Unit)

   Udorthents (Soil Name)

   Human Transported Material (Soil Limitations)

3. Surficial Geological Report Available? ☒ Yes ☐ No If yes: MassGIS (Year Published/Source) Publication Scale Map Unit

   Human Transported Material (Geologic/Parent Material)

   Landform

4. Flood Rate Insurance Map

   Above the 500-year flood boundary? ☒ Yes ☐ No

   Within the 100-year flood boundary? ☐ Yes ☒ No

   Within the 500-year flood boundary? ☐ Yes ☒ No

   Within a velocity zone? ☐ Yes ☒ No

5. Wetland Area: Wetlands Conservancy Program Map N/A (Map Unit) Name

6. Current Water Resource Conditions (USGS): 12-13 (Month/Year) Range: ☐ Above Normal ☐ Normal ☒ Below Normal

7. Other references reviewed:

Commonwealth of Massachusetts
City/Town of Quincy

Form 11 - Soil Suitability Assessment for On-Site Sewage Disposal

C. On-Site Review (*minimum of two holes required at every proposed primary and reserved disposal area)*

Deep Observation Hole Number: 6 | 12/30/2013 (Date) | 7:45 am (Time) | cold (35 degrees) (Weather)

1. Location

Ground Elevation at Surface of Hole: _____ Location (identify on plan): _____

2. Land Use: Developed (e.g., woodland, agricultural field, vacant lot, etc.) | none (Surface Stones) | 1-2 (Slope (%))

grass (Vegetation) | _____ (Landform) | _____ (Position on Landscape (attach sheet))

3. Distances from:

Open Water Body	_____ feet	Drainage Way	_____ feet	Possible Wet Area	_____ feet
Property Line	_____ feet	Drinking Water Well	_____ feet	Other	_____ feet

4. Parent Material: _____ Unsuitable Materials Present: ☒ Yes ☐ No

If Yes: ☐ Disturbed Soil ☒ Fill Material ☐ Impervious Layer(s) ☐ Weathered/Fractured Rock ☐ Bedrock

5. Groundwater Observed: ☒ Yes ☐ No If yes: 48" (Depth Weeping from Pit) | _____ (Depth Standing Water in Hole)

Estimated Depth to High Groundwater: _____ inches _____ elevation

Commonwealth of Massachusetts
City/Town of Quincy

Form 11 - Soil Suitability Assessment for On-Site Sewage Disposal

C. On-Site Review (continued)

Deep Observation Hole Number: 6

Depth (in.)	Soil Horizon/ Layer	Soil Matrix: Color-Moist (Munsell)	Redoximorphic Features (mottles)			Soil Texture (USDA)	Coarse Fragments % by Volume		Soil Structure	Soil Consistence (Moist)	Other
			Depth	Color	Percent		Gravel	Cobbles & Stones			
0-3	Ap	10YR 2/1				sandy loam			structure-less	friable	
3-15	Fill									firm	
15-27	E	2.5Y 4/1				fine sand			structure-less	firm	
27-39	A	10YR 2/1				sand loam			structure-less	firm	
39-108	-	10YR 5/1				sand	5		structure-less	firm	
108-120	Peat	5Y 2.5/1								friable	

Additional Notes:

Commonwealth of Massachusetts
City/Town of Quincy

Form 11 - Soil Suitability Assessment for On-Site Sewage Disposal

C. On-Site Review (continued)

Deep Observation Hole Number: 7 | 12/30/2013 (Date) | 9:45 am (Time) | cold (35 degrees) (Weather)

1. Location

Ground Elevation at Surface of Hole: _____ Location (identify on plan): _____

2. Land Use: Developed (e.g., woodland, agricultural field, vacant lot, etc.) | none (Surface Stones) | 1-2 (Slope (%))

Grass (Vegetation) | _____ (Landform) | _____ (Position on Landscape (attach sheet))

3. Distances from:

Open Water Body	_____ feet	Drainage Way	_____ feet	Possible Wet Area	_____ feet
Property Line	_____ feet	Drinking Water Well	_____ feet	Other	_____ feet

4. Parent Material: _____ Unsuitable Materials Present: ☒ Yes ☐ No

If Yes: ☐ Disturbed Soil ☒ Fill Material ☐ Impervious Layer(s) ☐ Weathered/Fractured Rock ☐ Bedrock

5. Groundwater Observed: ☒ Yes ☐ No If yes: _____ (Depth Weeping from Pit) _____ (Depth Standing Water in Hole)

Estimated Depth to High Groundwater: _____ inches _____ elevation

Commonwealth of Massachusetts
City/Town of Quincy

Form 11 - Soil Suitability Assessment for On-Site Sewage Disposal

C. On-Site Review (continued)

Deep Observation Hole Number: 7

Depth (in.)	Soil Horizon/ Layer	Soil Matrix: Color-Moist (Munsell)	Redoximorphic Features (mottles)			Soil Texture (USDA)	Coarse Fragments % by Volume		Soil Structure	Soil Consistence (Moist)	Other
			Depth	Color	Percent		Gravel	Cobbles & Stones			
0-3	Ap	10YR 2/1				Sandy loam			Structure-less	friable	
3-27	HTM									firm	
27-33	-	2.5Y 2.5/1				sandy loam			Structure-less	firm	organic fiber
33-45	-	5YR 4/1				fine sand			Structure-less	firm	leached horizon
45-120	-	10YR 4/1				sandy loam			Structure-less	firm	

Additional Notes:

D. Determination of High Groundwater Elevation

1. Method Used:

☐ Depth observed standing water in observation hole	A. _____ inches	B. _____ inches
☒ Depth weeping from side of observation hole	A. 48" (TP 6) inches	B. _____ inches
☐ Depth to soil redoximorphic features (mottles)	A. _____ inches	B. _____ inches
☐ Groundwater adjustment (USGS methodology)	A. _____ inches	B. _____ inches

2. _____ Index Well Number _____ Reading Date _____ Index Well Level

_____ Adjustment Factor _____ Adjusted Groundwater Level

E. Depth of Pervious Material

1. Depth of Naturally Occurring Pervious Material
   a. Does at least four feet of naturally occurring pervious material exist in all areas observed throughout the area proposed for the soil absorption system?

      ☐ Yes ☒ No

   b. If yes, at what depth was it observed? Upper boundary: _____ inches Lower boundary: _____ inches

Commonwealth of Massachusetts
City/Town of Quincy

Form 11 - Soil Suitability Assessment for On-Site Sewage Disposal

F. Certification

I certify that I am currently approved by the Department of Environmental Protection pursuant to 310 CMR 15.017 to conduct soil evaluations and that the above analysis has been performed by me consistent with the required training, expertise and experience described in 310 CMR 15.017. I further certify that the results of my soil evaluation, as indicated in the attached Soil Evaluation Form, are accurate and in accordance with 310 CMR 15.100 through 15.107.

Signature of Soil Evaluator	Date
Hernan Peralta / SE 12736 Typed or Printed Name of Soil Evaluator / License #	Date of Soil Evaluator Exam
Name of Board of Health Witness	Board of Health

Note: In accordance with 310 CMR 15.018(2) this form must be submitted to the approving authority within 60 days of the date of field testing, and to the designer and the property owner with Percolation Test Form 12.

Field Diagrams

Use this sheet for field diagrams:

Commonwealth of Massachusetts
City/Town of Quincy

Form 11 - Soil Suitability Assessment for On-Site Sewage Disposal

A. Facility Information

City of Quincy
Owner Name

86 Hollis Ave.
Street Address

Map/Lot #

Quincy
City

MA
State

Zip Code

B. Site Information

1. (Check one) ☐ New Construction ☐ Upgrade ☐ Repair

2. Soil Survey Available? ☒ Yes ☐ No If yes: NRCS web soil survey (Source) 654 (Soil Map Unit)

   Udorthents (Soil Name)

   Human Transported Material (Soil Limitations)

3. Surficial Geological Report Available? ☒ Yes ☐ No If yes: MassGIS (Year Published/Source) Publication Scale Map Unit

   Human Transported Material (Geologic/Parent Material)

   Landform

4. Flood Rate Insurance Map

   Above the 500-year flood boundary? ☒ Yes ☐ No

   Within the 100-year flood boundary? ☐ Yes ☒ No

   Within the 500-year flood boundary? ☐ Yes ☒ No

   Within a velocity zone? ☐ Yes ☒ No

5. Wetland Area: Wetlands Conservancy Program Map

   N/A (Map Unit)

   Name

6. Current Water Resource Conditions (USGS): 12-13 (Month/Year)

   Range: ☐ Above Normal ☐ Normal ☒ Below Normal

7. Other references reviewed:

Commonwealth of Massachusetts
City/Town of Quincy

Form 11 - Soil Suitability Assessment for On-Site Sewage Disposal

C. On-Site Review (*minimum of two holes required at every proposed primary and reserved disposal area)*

Deep Observation Hole Number: 8 | 12/30/2013 (Date) | 10:45 am (Time) | cold (35 degrees) (Weather)

1. Location

Ground Elevation at Surface of Hole: _____ Location (identify on plan): _____

2. Land Use: Developed (e.g., woodland, agricultural field, vacant lot, etc.) | none (Surface Stones) | 1-2 (Slope (%))

grass (Vegetation) | _____ (Landform) | _____ (Position on Landscape (attach sheet))

3. Distances from:

Open Water Body	____ feet	Drainage Way	____ feet	Possible Wet Area	____ feet
Property Line	____ feet	Drinking Water Well	____ feet	Other	____ feet

4. Parent Material: _____ Unsuitable Materials Present: ☒ Yes ☐ No

If Yes: ☐ Disturbed Soil ☒ Fill Material ☐ Impervious Layer(s) ☐ Weathered/Fractured Rock ☐ Bedrock

5. Groundwater Observed: ☒ Yes ☐ No If yes: 60" (Depth Weeping from Pit) | _____ (Depth Standing Water in Hole)

Estimated Depth to High Groundwater: _____ inches _____ elevation

Commonwealth of Massachusetts
City/Town of Quincy

Form 11 - Soil Suitability Assessment for On-Site Sewage Disposal

C. On-Site Review (continued)

Deep Observation Hole Number: 8

Depth (in.)	Soil Horizon/ Layer	Soil Matrix: Color-Moist (Munsell)	Redoximorphic Features (mottles)			Soil Texture (USDA)	Coarse Fragments % by Volume		Soil Structure	Soil Consistence (Moist)	Other
			Depth	Color	Percent		Gravel	Cobbles & Stones			
0-4	Ap	10YR 2/1				sandy loam			structure-less	friable	
4-28	HTM									firm	
28-36	-	5YR 4/1				fine sand			structure-less	firm	
36-40	-	2.5Y				silt			structure-less	firm	
40-43	-	2.5Y 2.5/1				sandy loam			structure-less	firm	organic seashells
43-47	-	10YR 2/1				sandy loam			structure-less	firm	
47-62	-	10YR 4/1				sandy loam			structure-less	firm	

Additional Notes:

Commonwealth of Massachusetts
City/Town of Quincy

Form 11 - Soil Suitability Assessment for On-Site Sewage Disposal

C. On-Site Review (continued)

Deep Observation Hole Number: 8 | 12/30/2013 (Date) | 10:45 am (Time) | cold (35 degrees) (Weather)

1. Location

Ground Elevation at Surface of Hole: _____ Location (identify on plan): _____

2. Land Use: Developed (e.g., woodland, agricultural field, vacant lot, etc.) | none (Surface Stones) | 1-2 (Slope (%))

Grass (Vegetation) | _____ (Landform) | _____ (Position on Landscape (attach sheet))

3. Distances from:

Open Water Body	_____ feet	Drainage Way	_____ feet	Possible Wet Area	_____ feet
Property Line	_____ feet	Drinking Water Well	_____ feet	Other	_____ feet

4. Parent Material: _____ Unsuitable Materials Present: ☒ Yes ☐ No

If Yes: ☐ Disturbed Soil ☒ Fill Material ☐ Impervious Layer(s) ☐ Weathered/Fractured Rock ☐ Bedrock

5. Groundwater Observed: ☒ Yes ☐ No If yes: 60" (Depth Weeping from Pit) | _____ (Depth Standing Water in Hole)

Estimated Depth to High Groundwater: _____ inches _____ elevation

Commonwealth of Massachusetts
City/Town of Quincy

Form 11 - Soil Suitability Assessment for On-Site Sewage Disposal

C. On-Site Review (continued)

Deep Observation Hole Number: 8 (continued)

Depth (in.)	Soil Horizon/ Layer	Soil Matrix: Color-Moist (Munsell)	Redoximorphic Features (mottles)			Soil Texture (USDA)	Coarse Fragments % by Volume		Soil Structure	Soil Consistence (Moist)	Other
			Depth	Color	Percent		Gravel	Cobbles & Stones			
62-120	Peat	5Y 2.5/1				silt loam			Structure-less	friable	

Additional Notes:

Commonwealth of Massachusetts
City/Town of Quincy

Form 11 - Soil Suitability Assessment for On-Site Sewage Disposal

D. Determination of High Groundwater Elevation

1. Method Used:

☐ Depth observed standing water in observation hole	A. _____ inches	B. _____ inches
☒ Depth weeping from side of observation hole	A. 60" (TP 8) inches	B. _____ inches
☐ Depth to soil redoximorphic features (mottles)	A. _____ inches	B. _____ inches
☐ Groundwater adjustment (USGS methodology)	A. _____ inches	B. _____ inches

2. _____ Index Well Number _____ Reading Date _____ Index Well Level

_____ Adjustment Factor _____ Adjusted Groundwater Level

E. Depth of Pervious Material

1. Depth of Naturally Occurring Pervious Material
   a. Does at least four feet of naturally occurring pervious material exist in all areas observed throughout the area proposed for the soil absorption system?

      ☐ Yes ☒ No

   b. If yes, at what depth was it observed? Upper boundary: _____ inches Lower boundary: _____ inches

Commonwealth of Massachusetts
City/Town of Quincy

Form 11 - Soil Suitability Assessment for On-Site Sewage Disposal

F. Certification

I certify that I am currently approved by the Department of Environmental Protection pursuant to 310 CMR 15.017 to conduct soil evaluations and that the above analysis has been performed by me consistent with the required training, expertise and experience described in 310 CMR 15.017. I further certify that the results of my soil evaluation, as indicated in the attached Soil Evaluation Form, are accurate and in accordance with 310 CMR 15.100 through 15.107.

Signature of Soil Evaluator	Date
Hernan Peralta / SE 12736 Typed or Printed Name of Soil Evaluator / License #	Date of Soil Evaluator Exam
Name of Board of Health Witness	Board of Health

Note: In accordance with 310 CMR 15.018(2) this form must be submitted to the approving authority within 60 days of the date of field testing, and to the designer and the property owner with Percolation Test Form 12.

Field Diagrams

Use this sheet for field diagrams:

Commonwealth of Massachusetts
City/Town of Quincy

Form 11 - Soil Suitability Assessment for On-Site Sewage Disposal

A. Facility Information

City of Quincy
Owner Name

86 Hollis Ave.
Street Address

Map/Lot #

Quincy
City

MA
State

Zip Code

B. Site Information

1. (Check one) ☐ New Construction ☐ Upgrade ☐ Repair

2. Soil Survey Available? ☒ Yes ☐ No If yes: NRCS web soil survey (Source) 654 (Soil Map Unit)

   Udorthents (Soil Name)

   Human Transported Material (Soil Limitations)

3. Surficial Geological Report Available? ☒ Yes ☐ No If yes: MassGIS (Year Published/Source) Publication Scale Map Unit

   Human Transported Material (Geologic/Parent Material)

   Landform

4. Flood Rate Insurance Map

   Above the 500-year flood boundary? ☒ Yes ☐ No

   Within the 100-year flood boundary? ☐ Yes ☒ No

   Within the 500-year flood boundary? ☐ Yes ☒ No

   Within a velocity zone? ☐ Yes ☒ No

5. Wetland Area: Wetlands Conservancy Program Map

   N/A (Map Unit)

   Name

6. Current Water Resource Conditions (USGS): 12-13 (Month/Year)

   Range: ☐ Above Normal ☐ Normal ☒ Below Normal

7. Other references reviewed:

Commonwealth of Massachusetts
City/Town of Quincy

Form 11 - Soil Suitability Assessment for On-Site Sewage Disposal

C. On-Site Review (*minimum of two holes required at every proposed primary and reserved disposal area)*

Deep Observation Hole Number: 9 | 12/30/2013 (Date) | 11:45 am (Time) | cold (35 degrees) (Weather)

1. Location

Ground Elevation at Surface of Hole: _____ Location (identify on plan): _____

2. Land Use: Developed (e.g., woodland, agricultural field, vacant lot, etc.) | none (Surface Stones) | 1-2 (Slope (%))

grass (Vegetation) | _____ (Landform) | _____ (Position on Landscape (attach sheet))

3. Distances from:

Open Water Body	_____ feet	Drainage Way	_____ feet	Possible Wet Area	_____ feet
Property Line	_____ feet	Drinking Water Well	_____ feet	Other	_____ feet

4. Parent Material: _____ Unsuitable Materials Present: ☒ Yes ☐ No

If Yes: ☐ Disturbed Soil ☒ Fill Material ☐ Impervious Layer(s) ☐ Weathered/Fractured Rock ☐ Bedrock

5. Groundwater Observed: ☒ Yes ☐ No If yes: 60" (Depth Weeping from Pit) | _____ (Depth Standing Water in Hole)

Estimated Depth to High Groundwater: _____ inches _____ elevation

Commonwealth of Massachusetts
City/Town of Quincy

Form 11 - Soil Suitability Assessment for On-Site Sewage Disposal

C. On-Site Review (continued)

Deep Observation Hole Number: 9

Depth (in.)	Soil Horizon/ Layer	Soil Matrix: Color-Moist (Munsell)	Redoximorphic Features (mottles)			Soil Texture (USDA)	Coarse Fragments % by Volume		Soil Structure	Soil Consistence (Moist)	Other
			Depth	Color	Percent		Gravel	Cobbles & Stones			
0-3	Ap	10YR 2/1				sandy loam			structure-less	friable	
3-39	Fill									firm	
39-60	Peat	5Y 2.5/1				silt loam			structure-less	firm	

Additional Notes:

Commonwealth of Massachusetts
City/Town of Quincy

Form 11 - Soil Suitability Assessment for On-Site Sewage Disposal

C. On-Site Review (continued)

Deep Observation Hole Number: _____ Date _____ Time _____ Weather _____

1. Location

   Ground Elevation at Surface of Hole: _____ Location (identify on plan): _____

2. Land Use _____ (e.g., woodland, agricultural field, vacant lot, etc.) Surface Stones _____ Slope (%) _____

   Vegetation _____ Landform _____ Position on Landscape (attach sheet) _____

3. Distances from: Open Water Body _____ feet Drainage Way _____ feet Possible Wet Area _____ feet

   Property Line _____ feet Drinking Water Well _____ feet Other _____ feet

4. Parent Material: _____ Unsuitable Materials Present: ☐ Yes ☐ No

   If Yes: ☐ Disturbed Soil ☐ Fill Material ☐ Impervious Layer(s) ☐ Weathered/Fractured Rock ☐ Bedrock

5. Groundwater Observed: ☐ Yes ☐ No If yes: _____ Depth Weeping from Pit _____ Depth Standing Water in Hole

   Estimated Depth to High Groundwater: _____ inches _____ elevation

Commonwealth of Massachusetts
City/Town of Quincy

Form 11 - Soil Suitability Assessment for On-Site Sewage Disposal

C. On-Site Review (continued)

Deep Observation Hole Number: _____

Depth (in.)	Soil Horizon/ Layer	Soil Matrix: Color-Moist (Munsell)	Redoximorphic Features (mottles)			Soil Texture (USDA)	Coarse Fragments % by Volume		Soil Structure	Soil Consistence (Moist)	Other
			Depth	Color	Percent		Gravel	Cobbles & Stones			

Additional Notes:

_____

_____

_____

Commonwealth of Massachusetts
City/Town of Quincy

Form 11 - Soil Suitability Assessment for On-Site Sewage Disposal

D. Determination of High Groundwater Elevation

1. Method Used:

☐ Depth observed standing water in observation hole	A. _____ inches	B. _____ inches
☒ Depth weeping from side of observation hole	A. 60" (TP 9) inches	B. _____ inches
☐ Depth to soil redoximorphic features (mottles)	A. _____ inches	B. _____ inches
☐ Groundwater adjustment (USGS methodology)	A. _____ inches	B. _____ inches

2. _____ Index Well Number _____ Reading Date _____ Index Well Level

_____ Adjustment Factor _____ Adjusted Groundwater Level

E. Depth of Pervious Material

1. Depth of Naturally Occurring Pervious Material
   a. Does at least four feet of naturally occurring pervious material exist in all areas observed throughout the area proposed for the soil absorption system?

      ☐ Yes ☒ No

   b. If yes, at what depth was it observed? Upper boundary: _____ inches Lower boundary: _____ inches

Commonwealth of Massachusetts
City/Town of Quincy

Form 11 - Soil Suitability Assessment for On-Site Sewage Disposal

F. Certification

I certify that I am currently approved by the Department of Environmental Protection pursuant to 310 CMR 15.017 to conduct soil evaluations and that the above analysis has been performed by me consistent with the required training, expertise and experience described in 310 CMR 15.017. I further certify that the results of my soil evaluation, as indicated in the attached Soil Evaluation Form, are accurate and in accordance with 310 CMR 15.100 through 15.107.

Signature of Soil Evaluator	Date
Hernan Peralta / SE 12736 Typed or Printed Name of Soil Evaluator / License #	Date of Soil Evaluator Exam
Name of Board of Health Witness	Board of Health

Note: In accordance with 310 CMR 15.018(2) this form must be submitted to the approving authority within 60 days of the date of field testing, and to the designer and the property owner with Percolation Test Form 12.

Field Diagrams

Use this sheet for field diagrams:

Commonwealth of Massachusetts
City/Town of Quincy

Form 11 - Soil Suitability Assessment for On-Site Sewage Disposal

A. Facility Information

City of Quincy
Owner Name

86 Hollis Ave.
Street Address

Map/Lot #

Quincy
City

MA
State

Zip Code

B. Site Information

1. (Check one) ☐ New Construction ☐ Upgrade ☐ Repair

2. Soil Survey Available? ☒ Yes ☐ No If yes: NRCS web soil survey (Source) 654 (Soil Map Unit)

   Udorthents (Soil Name)

   Human Transported Material (Soil Limitations)

3. Surficial Geological Report Available? ☒ Yes ☐ No If yes: MassGIS (Year Published/Source) (Publication Scale) (Map Unit)

   Human Transported Material (Geologic/Parent Material)

   (Landform)

4. Flood Rate Insurance Map

   Above the 500-year flood boundary? ☒ Yes ☐ No

   Within the 100-year flood boundary? ☐ Yes ☒ No

   Within the 500-year flood boundary? ☐ Yes ☒ No

   Within a velocity zone? ☐ Yes ☒ No

5. Wetland Area: Wetlands Conservancy Program Map N/A (Map Unit) (Name)

6. Current Water Resource Conditions (USGS): 12-13 (Month/Year) Range: ☐ Above Normal ☐ Normal ☒ Below Normal

7. Other references reviewed:

Commonwealth of Massachusetts
City/Town of Quincy

Form 11 - Soil Suitability Assessment for On-Site Sewage Disposal

C. On-Site Review (*minimum of two holes required at every proposed primary and reserved disposal area)*

Deep Observation Hole Number: 10 | 12/30/2013 (Date) | 12:45 am (Time) | cold (35 degrees) (Weather)

1. Location

Ground Elevation at Surface of Hole: _____ Location (identify on plan): _____

2. Land Use: Developed (e.g., woodland, agricultural field, vacant lot, etc.) | none (Surface Stones) | 1-2 (Slope (%))

grass (Vegetation) | _____ (Landform) | _____ (Position on Landscape (attach sheet))

3. Distances from:

Open Water Body	_____ feet	Drainage Way	_____ feet	Possible Wet Area	_____ feet
Property Line	_____ feet	Drinking Water Well	_____ feet	Other	_____ feet

4. Parent Material: _____ Unsuitable Materials Present: ☒ Yes ☐ No

If Yes: ☐ Disturbed Soil ☒ Fill Material ☐ Impervious Layer(s) ☐ Weathered/Fractured Rock ☐ Bedrock

5. Groundwater Observed: ☒ Yes ☐ No If yes: 96" (Depth Weeping from Pit) | _____ (Depth Standing Water in Hole)

Estimated Depth to High Groundwater: _____ inches _____ elevation

Commonwealth of Massachusetts
City/Town of Quincy

Form 11 - Soil Suitability Assessment for On-Site Sewage Disposal

C. On-Site Review (continued)

Deep Observation Hole Number: 10

Depth (in.)	Soil Horizon/ Layer	Soil Matrix: Color-Moist (Munsell)	Redoximorphic Features (mottles)			Soil Texture (USDA)	Coarse Fragments % by Volume		Soil Structure	Soil Consistence (Moist)	Other
			Depth	Color	Percent		Gravel	Cobbles & Stones			
0-3	Ap	10YR 2/1				sandy loam			structure-less	friable	
3-18	HTM										
18-22	-	2.5Y 3/1				loamy sand	1		structure-less	firm	
22-24	-	5Y 2.5/1				sandy loam			structure-less	firm	organic fiber
24-36	-	10YR 5/2				fine sand			structure-less	firm	
36-40	-	10YR 2/2				sandy loam			structure-less	firm	
40-43	-	10YR 4/3				sandy loam			structure-less	firm	

Additional Notes:

Commonwealth of Massachusetts
City/Town of Quincy

Form 11 - Soil Suitability Assessment for On-Site Sewage Disposal

C. On-Site Review (continued)

Deep Observation Hole Number: _____ Date _____ Time _____ Weather _____

1. Location

   Ground Elevation at Surface of Hole: _____ Location (identify on plan): _____

2. Land Use _____ (e.g., woodland, agricultural field, vacant lot, etc.) Surface Stones _____ Slope (%) _____

   Vegetation _____ Landform _____ Position on Landscape (attach sheet) _____

3. Distances from: Open Water Body _____ feet Drainage Way _____ feet Possible Wet Area _____ feet

   Property Line _____ feet Drinking Water Well _____ feet Other _____ feet

4. Parent Material: _____ Unsuitable Materials Present: ☐ Yes ☐ No

   If Yes: ☐ Disturbed Soil ☐ Fill Material ☐ Impervious Layer(s) ☐ Weathered/Fractured Rock ☐ Bedrock

5. Groundwater Observed: ☐ Yes ☐ No If yes: _____ Depth Weeping from Pit _____ Depth Standing Water in Hole

   Estimated Depth to High Groundwater: _____ inches _____ elevation

Commonwealth of Massachusetts
City/Town of Quincy

Form 11 - Soil Suitability Assessment for On-Site Sewage Disposal

C. On-Site Review (continued)

Deep Observation Hole Number: 10 (continued)

Depth (in.)	Soil Horizon/ Layer	Soil Matrix: Color-Moist (Munsell)	Redoximorphic Features (mottles)			Soil Texture (USDA)	Coarse Fragments % by Volume		Soil Structure	Soil Consistence (Moist)	Other
			Depth	Color	Percent		Gravel	Cobbles & Stones			
43-50	-	5Y 4/1				sandy loam			structure-less	firm	
50-54	-	10YR 4/2				sandy loam			structure-less	firm	
54-78	-	2.5Y 4/1				sand	10		structure-less	firm	
78-104	HTM									firm	
104-120	Peat	5Y 2.5/1				silt loam			structure-less	friable	

Additional Notes:

Commonwealth of Massachusetts
City/Town of Quincy

Form 11 - Soil Suitability Assessment for On-Site Sewage Disposal

D. Determination of High Groundwater Elevation

1. Method Used:

☐ Depth observed standing water in observation hole	A. _____ inches	B. _____ inches
☒ Depth weeping from side of observation hole	A. 96" (TP 10) inches	B. _____ inches
☐ Depth to soil redoximorphic features (mottles)	A. _____ inches	B. _____ inches
☐ Groundwater adjustment (USGS methodology)	A. _____ inches	B. _____ inches

2. _____ Index Well Number _____ Reading Date _____ Index Well Level

_____ Adjustment Factor _____ Adjusted Groundwater Level

E. Depth of Pervious Material

1. Depth of Naturally Occurring Pervious Material
   a. Does at least four feet of naturally occurring pervious material exist in all areas observed throughout the area proposed for the soil absorption system?

      ☐ Yes ☒ No

   b. If yes, at what depth was it observed? Upper boundary: _____ inches Lower boundary: _____ inches

Commonwealth of Massachusetts
City/Town of Quincy

Form 11 - Soil Suitability Assessment for On-Site Sewage Disposal

F. Certification

I certify that I am currently approved by the Department of Environmental Protection pursuant to 310 CMR 15.017 to conduct soil evaluations and that the above analysis has been performed by me consistent with the required training, expertise and experience described in 310 CMR 15.017. I further certify that the results of my soil evaluation, as indicated in the attached Soil Evaluation Form, are accurate and in accordance with 310 CMR 15.100 through 15.107.

Signature of Soil Evaluator	Date
Hernan Peralta / SE 12736 Typed or Printed Name of Soil Evaluator / License #	Date of Soil Evaluator Exam
Name of Board of Health Witness	Board of Health

Note: In accordance with 310 CMR 15.018(2) this form must be submitted to the approving authority within 60 days of the date of field testing, and to the designer and the property owner with Percolation Test Form 12.

Field Diagrams

Use this sheet for field diagrams:

This page intentionally left blank

SECTION 00 73 19

HEALTH AND SAFETY REQUIREMENTS

Contractor shall comply with the follow requirements and is solely responsible to determine, obtain, review and interpret the full text of applicable Laws and Regulations.

A. Code of Federal Regulations, Chapter XVII-Occupational Safety and Health Administration (OSHA), Department of Labor, Title 29, Part 1926, Safety and Health Regulations for Construction.

1. Contractor shall strictly comply with the Hazard Communication Standard 1910.1200 regulated by OSHA, including providing and maintaining Safety Data Sheets, labeling of hazardous substances, and providing required protective equipment and training and instruction to personnel on the Site including Owner and Engineer's personnel.

B. Pursuant to MGL Chapter 30, Section 39M and 39S, all employees to be employed at the Work Site will have successfully completed a course in construction safety and health approved by the United States Occupational Safety and Health Administration that is at least 10 hours in duration at the time the employee begins Work, and who shall furnish documentation of successful completion of said course with the first certified payroll report for each employee. Any employee found on a Work Site subject to this section without documentation of successful completion of a course in construction safety and health approved by the United States Occupational Safety and Health Administration that is at least 10 hours in duration shall be subject to immediate removal.

C. This Project is subject to the following:

- MGL Chapter 82, *The Laying Out, Alteration, Relocation and Discontinuance Of Public Ways, And Specific Repairs Thereon*, Section 40:

Section 40 Definitions
Section 40A Excavations; notice
Section 40B Designation of location of underground facilities
Section 40C Excavator's responsibility to maintain designation markings; damage caused by excavator
Section 40D Local laws requiring excavation permits; public ways

- MGL Chapter 82A, *Excavation and Trench Safety*

  Section 1 Unattended open trenches; safety hazards; rules and regulations; fines
  Section 2 Trench excavating permits; permits issued by board or officer; certificate of insurance; fees
  Section 3 Form of trench excavation permits; required statements
  Section 4 Definitions
  Section 5 Additional requirements

- MGL Chapter 149, Section 129A *Shoring Trenches for local governments*

- Massachusetts Department of Labor and Industries, Division of Occupational Safety "*Construction Industry Rules and Regulations*" (Chapter 454 CMR 10.00 et seq.)

- Massachusetts Department of Public Safety "*Excavation and Trench Safety*" (Chapter 520 CMR 14.00 et seq.)

- Protection of personnel and equipment under electric lines: comply with the AASHTO Guide on Occupational Safety on Highway Construction Projects, Subpart N, 1926.550, relating to construction equipment clearances at overhead electric lines especially during operations using large vehicles.

END OF SECTION

SECTION 00 73 37

EQUAL EMPLOYMENT OPPORTUNITY REQUIREMENTS

A. The Contractor will not discriminate against any employee or applicant for employment because of race, color, religion, sex, or national origin. The Contractor will take affirmative action to ensure that applicants are employed, and that employees are treated during employment, without regard to their race, color, religion, sex or national origin. Such action shall include, but not be limited to the following: employment, upgrading, demotion, or transfer; recruitment or recruitment advertising; layoff or termination; rates of pay or other forms of compensation; provision of non-segregated facilities and selection for training, including apprenticeship. The Contractor agrees to post in conspicuous places, available to employees and applicants for employment, notices setting forth the provisions of this nondiscrimination clause.

B. The Contractor will, in all solicitations or advancements for employees placed by or on behalf of the Contractor, state that all qualified applicants will receive consideration for employment without regard to race, color, religion, sex or national origin.

C. The Contractor will comply with all provisions of Executive Order No. 11246 as amended, and of the rules, Regulations, and relevant orders of the Secretary of Labor as applicable, and additional provisions for federally-assisted construction contracts, including those required by 41 CFR 60-4.3.

D. In the event of the Contractor's noncompliance with the nondiscrimination clauses of the Contract or with any of such rules, Regulations, or orders, the Contract may be cancelled, terminated, or suspended in whole or in part and the Contractor may be declared ineligible for further contracts in accordance with procedures authorized in Executive Order No. 11246 as amended, and such other sanctions may be imposed and remedies invoked as provided in Executive Order No. 11246 as amended, or by rule, Regulation, or order of the Secretary of Labor, or as otherwise provided by Law.

E. The Contractor will include the applicable provisions of the above paragraphs in every subcontract or purchase order unless exempted by rules, Regulations, or orders of the Secretary of Labor issued pursuant to Section 204 of Executive Order No. 11246 as amended, so that such provisions will be binding upon each Subcontractor or vendor or Supplier.

END OF SECTION

This page intentionally left blank

SECTION 00 73 43

WAGE RATE REQUIREMENTS

The Project is subject to minimum wage rates as determined by the Commissioner of Department of Workforce Development pursuant to MGL Chapter 149, Sections 26 to 27D. Wage Determination Schedules are included in Section 00 73 46.

Requirements of MGL Chapter 149, Sections 26 to 27D

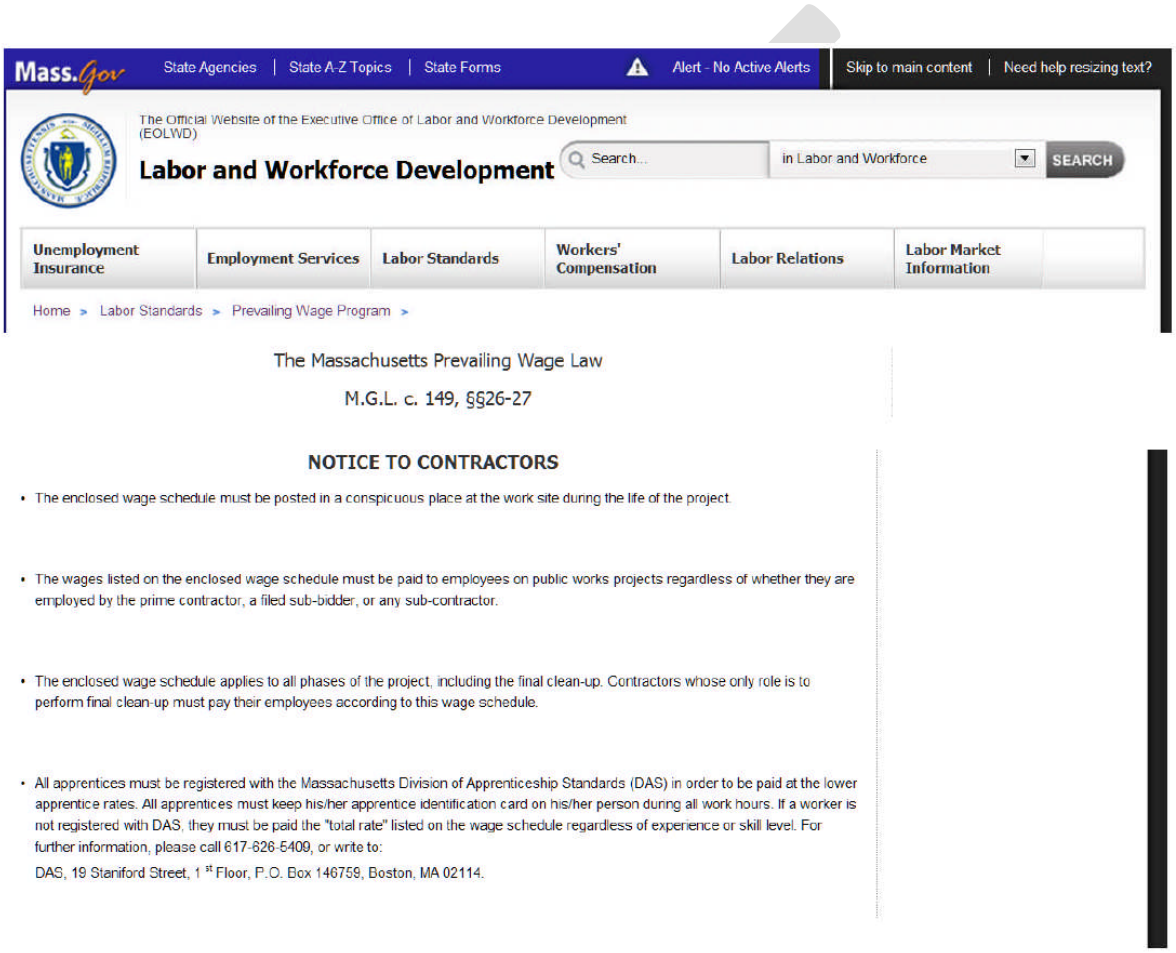

Mass.Gov | State Agencies | State A-Z Topics | State Forms | Alert - No Active Alerts | Skip to main content | Need help resizing text?

The Official Website of the Executive Office of Labor and Workforce Development (EOLWD)

Labor and Workforce Development

Search... in Labor and Workforce SEARCH

Unemployment Insurance | Employment Services | Labor Standards | Workers' Compensation | Labor Relations | Labor Market Information

Home > Labor Standards > Prevailing Wage Program >

The Massachusetts Prevailing Wage Law

M.G.L. c. 149, §§26-27

NOTICE TO CONTRACTORS

- The enclosed wage schedule must be posted in a conspicuous place at the work site during the life of the project.
- The wages listed on the enclosed wage schedule must be paid to employees on public works projects regardless of whether they are employed by the prime contractor, a filed sub-bidder, or any sub-contractor.
- The enclosed wage schedule applies to all phases of the project, including the final clean-up. Contractors whose only role is to perform final clean-up must pay their employees according to this wage schedule.
- All apprentices must be registered with the Massachusetts Division of Apprenticeship Standards (DAS) in order to be paid at the lower apprentice rates. All apprentices must keep his/her apprentice identification card on his/her person during all work hours. If a worker is not registered with DAS, they must be paid the "total rate" listed on the wage schedule regardless of experience or skill level. For further information, please call 617-626-5409, or write to:

  DAS, 19 Staniford Street, 1st Floor, P.O. Box 146759, Boston, MA 02114.

WEEKLY PAYROLL RECORDS REPORT
& STATEMENT OF COMPLIANCE

In accordance with Massachusetts General Law c. 149, §27B, a true and accurate record must be kept of all persons employed on the public works project for which the enclosed rates have been provided. A Payroll Form has been printed on the reverse of this page and includes all the information required to be kept by law. Every contractor or subcontractor is required to keep these records and preserve them for a period of three years from the date of completion of the contract.

In addition, every contractor and subcontractor is required to submit a copy of their weekly payroll records to the awarding authority. This is required to be done on a weekly basis. Once collected, the awarding authority is also required to preserve those records for three years from the date of completion of the project.

Each such contractor or subcontractor shall furnish to the awarding authority directly within 15 days after completion of its portion of the work, a statement, executed by the contractor, subcontractor or by any authorized officer thereof who supervised the payment of wages, this form.

STATEMENT OF COMPLIANCE

_____, 20_____

I,_____,_____
(Name of signatory party) (Title)

do hereby state:

That I pay or supervise the payment of the persons employed by

_____ on the _____
(Contractor, subcontractor or public body) (Building or project)

and that all mechanics and apprentices, teamsters, chauffeurs and laborers employed on said project have been paid in accordance with wages determined under the provisions of sections twenty-six and twenty-seven of chapter one hundred and forty nine of the General Laws.

Signature _____
Title _____

09/11

MASSACHUSETTS WEEKLY CERTIFIED PAYROLL REPORT FORM

Company's Name:	Address:	Phone No.:	Payroll No.:

Employer's Signature:	Title:	Contract No:	Tax Payer ID No.	Work Week Ending:

Awarding Authority's Name:	Public Works Project Name:	Public Works Project Location:	Min. Wage Rate Sheet No.

General / Prime Contractor's Name:	Subcontractor's Name:

Employee Name & Complete Address	Employee is OSHA 10 Certified (?)	Work Classification:	Appr. Rate (%)	Hours Worked Su.	Mo.	Tu.	We.	Th.	Fr.	Sa.	Project Hours (A) / All Other Hours	Hourly Base Wage (B)	"Employer" Hourly Fringe Benefit Contributions: Health & Welfare Insurance (C')	ERISA Pension Plan (D)	Supp. Unemp. (E)	Total Hourly Prev. Wage (F) (B+C+D+E)	Project Gross Wages (G) (A x F) / Total Gross Wages	Check No. (H)
	☐																	
	☐																	
	☐																	
	☐																	
	☐																	
	☐																	
	☐																	

NOTE: Pursuant to MGL Ch. 149 s.27B, every contractor and subcontractor is required to submit a "true and accurate" copy of their weekly payroll records directly to the awarding authority. Failure to comply may result in the commencement of a criminal action or the issuance of a civil citation.

Page _____ of _____

Date recieved by awarding authority
/ /

This page intentionally left blank

SECTION 00 73 46

WAGE DETERMINATION SCHEDULE

The Project is subject to the following wage rates (included in this section) in accordance with the requirements included in Section 00 73 43.

- Minimum wage rates as determined by the Commissioner of Department of Workforce Development pursuant to MGL Chapter 149, Sections 26 to 27D

This page intentionally left blank

THE COMMONWEALTH OF MASSACHUSETTS
EXECUTIVE OFFICE OF LABOR AND WORKFORCE DEVELOPMENT
DEPARTMENT OF LABOR STANDARDS

DEVAL L. PATRICK
Governor

Prevailing Wage Rates

As determined by the Director under the provisions of the Massachusetts General Laws, Chapter 149, Sections 26 to 27H

RACHEL KAPRIELIAN
Secretary

HEATHER E. ROWE
Director

Awarding Authority: City of Quincy

Contract Number:

City/Town: QUINCY

Description of Work: Atlantic Middle School Campus Improvements - The work consists of, but is not limited to, construction of vehicular access, parking facilities and drainage infrastructure construction and repairs.

Job Location: Hollis Ave

Information about Prevailing Wage Schedules for Awarding Authorities and Contractors

- This wage schedule applies only to the specific project referenced at the top of this page and uniquely identified by the "Wage Request Number" on all pages of this schedule.
- Awarding authorities must request an updated wage schedule from the Department of Labor Standards ("DLS") if it has not opened bids or selected a contractor within 90 days of the date of issuance of the wage schedule.
- The wage schedule shall be incorporated in any advertisement or call for bids for the project as required by M.G.L. c. 149, § 27. Once a contractor has been selected by the awarding authority, the wage schedule shall be made a part of the contract for that project. The wage schedule must be posted in a conspicuous place at the work site during the life of the project in accordance with M.G.L. c. 149, § 27. The wages listed on the wage schedule must be paid to employees performing construction work on the project regardless of whether they are employed by the prime contractor, a filed sub-bidder, or any sub-contractor.
- All apprentices working on the project are required to be registered with the Massachusetts Division of Apprentice Training (DAT). Apprentices must keep his/her apprentice identification card on his/her person during all work hours on the project. If an apprentice rate is listed on the prevailing wage schedule for the trade in which an apprentice is registered with the DAT, the apprentice may be paid the lower apprentice wage rate at the applicable step as provided on the prevailing wage schedule. **If an apprentice rate is not listed on the prevailing wage schedule for the trade in which an apprentice is registered with the DAT, the apprentice must be paid the journeyworker's rate for the trade.**
- The wage rates will remain in effect for the duration of the project, except in the case of multi-year public construction projects. For construction projects lasting longer than one year, awarding authorities must request an updated wage schedule. Awarding authorities are required to request these updates no later than two weeks before the anniversary of the date the contract was executed by the awarding authority and the general contractor. Contractors are required to obtain the wage schedules from awarding authorities, and to pay no less than these rates to covered workers. The annual update requirement is not applicable to 27F "rental of equipment" contracts.
- Every contractor or subcontractor which performs construction work on the project is required to submit weekly payroll reports directly to the awarding authority and keep them on file for three years. Each weekly payroll report must contain: the employee's name, address, occupational classification, hours worked, and wages paid. Do not submit weekly payroll reports to DLS. A sample of a payroll reporting form may be obtained at http://www.mass.gov/dols/pw.
- Contractors with questions about the wage rates or classifications included on the wage schedule have an affirmative obligation to inquire with DLS at (617) 626-6953.
- Employees not receiving the prevailing wage rate set forth on the wage schedule may report the violation to the Fair Labor Division of the office of the Attorney General at (617) 727-3465.
- Failure of a contractor or subcontractor to pay the prevailing wage rates listed on the wage schedule to all employees who perform construction work on the project is a violation of the law and subjects the contractor or subcontractor to civil and criminal penalties.

Issue Date: 04/09/2014 **Wage Request Number:** 20140409-040

Classification	Effective Date	Base Wage	Health	Pension	Supplemental Unemployment	Total Rate
Construction						
(2 AXLE) DRIVER - EQUIPMENT *TEAMSTERS JOINT COUNCIL NO. 10 ZONE A*	12/01/2013	$32.05	$9.41	$8.80	$0.00	$50.26
	06/01/2014	$32.40	$9.41	$8.80	$0.00	$50.61
	08/01/2014	$32.40	$9.91	$8.80	$0.00	$51.11
	12/01/2014	$32.40	$9.91	$9.33	$0.00	$51.64
	06/01/2015	$32.75	$9.91	$9.33	$0.00	$51.99
	08/01/2015	$32.75	$10.41	$9.33	$0.00	$52.49
	12/01/2015	$32.75	$10.41	$10.08	$0.00	$53.24
	06/01/2016	$33.25	$10.41	$10.08	$0.00	$53.74
	08/01/2016	$33.25	$10.91	$10.08	$0.00	$54.24
	12/01/2016	$33.25	$10.91	$10.89	$0.00	$55.05
(3 AXLE) DRIVER - EQUIPMENT *TEAMSTERS JOINT COUNCIL NO. 10 ZONE A*	12/01/2013	$32.12	$9.41	$8.80	$0.00	$50.33
	06/01/2014	$32.47	$9.41	$8.80	$0.00	$50.68
	08/01/2014	$32.47	$9.91	$8.80	$0.00	$51.18
	12/01/2014	$32.47	$9.91	$9.33	$0.00	$51.71
	06/01/2015	$32.82	$9.91	$9.33	$0.00	$52.06
	08/01/2015	$32.82	$10.41	$9.33	$0.00	$52.56
	12/01/2015	$32.82	$10.41	$10.08	$0.00	$53.31
	06/01/2016	$33.32	$10.41	$10.08	$0.00	$53.81
	08/01/2016	$33.32	$10.91	$10.08	$0.00	$54.31
	12/01/2016	$33.32	$10.91	$10.89	$0.00	$55.12
(4 & 5 AXLE) DRIVER - EQUIPMENT *TEAMSTERS JOINT COUNCIL NO. 10 ZONE A*	12/01/2013	$32.24	$9.41	$8.80	$0.00	$50.45
	06/01/2014	$32.59	$9.41	$8.80	$0.00	$50.80
	08/01/2014	$32.59	$9.91	$8.80	$0.00	$51.30
	12/01/2014	$32.59	$9.91	$9.33	$0.00	$51.83
	06/01/2015	$32.94	$9.91	$9.33	$0.00	$52.18
	08/01/2015	$32.94	$10.41	$9.33	$0.00	$52.68
	12/01/2015	$32.94	$10.41	$10.08	$0.00	$53.43
	06/01/2016	$33.44	$10.41	$10.08	$0.00	$53.93
	08/01/2016	$33.44	$10.91	$10.08	$0.00	$54.43
	12/01/2016	$33.44	$10.91	$10.89	$0.00	$55.24
ADS/SUBMERSIBLE PILOT *PILE DRIVER LOCAL 56 (ZONE 1)*	08/01/2013	$84.21	$9.80	$18.17	$0.00	$112.18
	08/01/2014	$87.36	$9.80	$18.17	$0.00	$115.33
	08/01/2015	$90.51	$9.80	$18.17	$0.00	$118.48
AIR TRACK OPERATOR *LABORERS - ZONE 1*	12/01/2013	$34.10	$7.30	$12.70	$0.00	$54.10
	06/01/2014	$34.85	$7.30	$12.70	$0.00	$54.85
	12/01/2014	$35.60	$7.30	$12.70	$0.00	$55.60
	06/01/2015	$36.35	$7.30	$12.70	$0.00	$56.35
	12/01/2015	$37.10	$7.30	$12.70	$0.00	$57.10
	06/01/2016	$37.85	$7.30	$12.70	$0.00	$57.85
	12/01/2016	$38.85	$7.30	$12.70	$0.00	$58.85

For apprentice rates see "Apprentice- LABORER"

Classification	Effective Date	Base Wage	Health	Pension	Supplemental Unemployment	Total Rate
ASBESTOS REMOVER - PIPE / MECH. EQUIPT. *HEAT & FROST INSULATORS LOCAL 6 (BOSTON)*	12/01/2013	$30.68	$10.40	$5.95	$0.00	$47.03
	06/01/2014	$31.58	$10.40	$5.95	$0.00	$47.93
	12/01/2014	$32.48	$10.40	$5.95	$0.00	$48.83
	06/01/2015	$33.43	$10.40	$5.95	$0.00	$49.78
	12/01/2015	$34.38	$10.40	$5.95	$0.00	$50.73
ASPHALT RAKER *LABORERS - ZONE 1*	12/01/2013	$33.60	$7.30	$12.70	$0.00	$53.60
	06/01/2014	$34.35	$7.30	$12.70	$0.00	$54.35
	12/01/2014	$35.10	$7.30	$12.70	$0.00	$55.10
	06/01/2015	$35.85	$7.30	$12.70	$0.00	$55.85
	12/01/2015	$36.60	$7.30	$12.70	$0.00	$56.60
	06/01/2016	$37.35	$7.30	$12.70	$0.00	$57.35
	12/01/2016	$38.35	$7.30	$12.70	$0.00	$58.35
For apprentice rates see "Apprentice- LABORER"						
ASPHALT/CONCRETE/CRUSHER PLANT-ON SITE *OPERATING ENGINEERS LOCAL 4*	12/01/2013	$40.49	$10.00	$14.18	$0.00	$64.67
For apprentice rates see "Apprentice- OPERATING ENGINEERS"						
BACKHOE/FRONT-END LOADER *OPERATING ENGINEERS LOCAL 4*	12/01/2013	$40.49	$10.00	$14.18	$0.00	$64.67
For apprentice rates see "Apprentice- OPERATING ENGINEERS"						
BARCO-TYPE JUMPING TAMPER *LABORERS - ZONE 1*	12/01/2013	$33.60	$7.30	$12.70	$0.00	$53.60
	06/01/2014	$34.35	$7.30	$12.70	$0.00	$54.35
	12/01/2014	$35.10	$7.30	$12.70	$0.00	$55.10
	06/01/2015	$35.85	$7.30	$12.70	$0.00	$55.85
	12/01/2015	$36.60	$7.30	$12.70	$0.00	$56.60
	06/01/2016	$37.35	$7.30	$12.70	$0.00	$57.35
	12/01/2016	$38.35	$7.30	$12.70	$0.00	$58.35
For apprentice rates see "Apprentice- LABORER"						
BLOCK PAVER, RAMMER / CURB SETTER *LABORERS - ZONE 1*	12/01/2013	$34.10	$7.30	$12.70	$0.00	$54.10
	06/01/2014	$34.85	$7.30	$12.70	$0.00	$54.85
	12/01/2014	$35.60	$7.30	$12.70	$0.00	$55.60
	06/01/2015	$36.35	$7.30	$12.70	$0.00	$56.35
	12/01/2015	$37.10	$7.30	$12.70	$0.00	$57.10
	06/01/2016	$37.85	$7.30	$12.70	$0.00	$57.85
	12/01/2016	$38.85	$7.30	$12.70	$0.00	$58.85
For apprentice rates see "Apprentice- LABORER"						
BOILER MAKER *BOILERMAKERS LOCAL 29*	01/01/2010	$37.70	$6.97	$11.18	$0.00	$55.85

Classification	Effective Date	Base Wage	Health	Pension	Supplemental Unemployment	Total Rate

Apprentice - *BOILERMAKER - Local 29*

Effective Date - 01/01/2010

Step	percent	Apprentice Base Wage	Health	Pension	Supplemental Unemployment	Total Rate
1	65	$24.51	$6.97	$11.18	$0.00	$42.66
2	65	$24.51	$6.97	$11.18	$0.00	$42.66
3	70	$26.39	$6.97	$11.18	$0.00	$44.54
4	75	$28.28	$6.97	$11.18	$0.00	$46.43
5	80	$30.16	$6.97	$11.18	$0.00	$48.31
6	85	$32.05	$6.97	$11.18	$0.00	$50.20
7	90	$33.93	$6.97	$11.18	$0.00	$52.08
8	95	$35.82	$6.97	$11.18	$0.00	$53.97

Notes:

Apprentice to Journeyworker Ratio:1:5

BRICK/STONE/ARTIFICIAL MASONRY (INCL. MASONRY WATERPROOFING) *BRICKLAYERS LOCAL 3 (QUINCY)*	02/01/2014	$48.06	$10.18	$18.15	$0.00	$76.39
	08/01/2014	$48.96	$10.18	$18.22	$0.00	$77.36
	02/01/2015	$49.52	$10.18	$18.22	$0.00	$77.92
	08/01/2015	$50.42	$10.18	$18.29	$0.00	$78.89
	02/01/2016	$50.99	$10.18	$18.29	$0.00	$79.46
	08/01/2016	$51.89	$10.18	$18.37	$0.00	$80.44
	02/01/2017	$52.46	$10.18	$18.37	$0.00	$81.01

Classification	Effective Date	Base Wage	Health	Pension	Supplemental Unemployment	Total Rate

Apprentice - *BRICK/PLASTER/CEMENT MASON - Local 3 Quincy*

Effective Date - 02/01/2014

Step	percent	Apprentice Base Wage	Health	Pension	Supplemental Unemployment	Total Rate
1	50	$24.03	$10.18	$18.15	$0.00	$52.36
2	60	$28.84	$10.18	$18.15	$0.00	$57.17
3	70	$33.64	$10.18	$18.15	$0.00	$61.97
4	80	$38.45	$10.18	$18.15	$0.00	$66.78
5	90	$43.25	$10.18	$18.15	$0.00	$71.58

Effective Date - 08/01/2014

Step	percent	Apprentice Base Wage	Health	Pension	Supplemental Unemployment	Total Rate
1	50	$24.48	$10.18	$18.22	$0.00	$52.88
2	60	$29.38	$10.18	$18.22	$0.00	$57.78
3	70	$34.27	$10.18	$18.22	$0.00	$62.67
4	80	$39.17	$10.18	$18.22	$0.00	$67.57
5	90	$44.06	$10.18	$18.22	$0.00	$72.46

Notes:

Apprentice to Journeyworker Ratio:1:5

BULLDOZER/GRADER/SCRAPER *OPERATING ENGINEERS LOCAL 4*	12/01/2013	$40.11	$10.00	$14.18	$0.00	$64.29

For apprentice rates see "Apprentice- OPERATING ENGINEERS"

CAISSON & UNDERPINNING BOTTOM MAN *LABORERS - FOUNDATION AND MARINE*	12/01/2013	$34.45	$7.30	$12.90	$0.00	$54.65
	06/01/2014	$35.20	$7.30	$12.90	$0.00	$55.40
	12/01/2014	$35.95	$7.30	$12.90	$0.00	$56.15
	06/01/2015	$36.70	$7.30	$12.90	$0.00	$56.90
	12/01/2015	$37.45	$7.30	$12.90	$0.00	$57.65
	06/01/2016	$38.20	$7.30	$12.90	$0.00	$58.40
	12/01/2016	$39.20	$7.30	$12.90	$0.00	$59.40

For apprentice rates see "Apprentice- LABORER"

CAISSON & UNDERPINNING LABORER *LABORERS - FOUNDATION AND MARINE*	12/01/2013	$33.30	$7.30	$12.90	$0.00	$53.50
	06/01/2014	$34.05	$7.30	$12.90	$0.00	$54.25
	12/01/2014	$34.80	$7.30	$12.90	$0.00	$55.00
	06/01/2015	$35.55	$7.30	$12.90	$0.00	$55.75
	12/01/2015	$36.30	$7.30	$12.90	$0.00	$56.50
	06/01/2016	$37.05	$7.30	$12.90	$0.00	$57.25
	12/01/2016	$38.05	$7.30	$12.90	$0.00	$58.25

For apprentice rates see "Apprentice- LABORER"

Classification	Effective Date	Base Wage	Health	Pension	Supplemental Unemployment	Total Rate
CAISSON & UNDERPINNING TOP MAN *LABORERS - FOUNDATION AND MARINE*	12/01/2013	$33.30	$7.30	$12.90	$0.00	$53.50
	06/01/2014	$34.05	$7.30	$12.90	$0.00	$54.25
	12/01/2014	$34.80	$7.30	$12.90	$0.00	$55.00
	06/01/2015	$35.55	$7.30	$12.90	$0.00	$55.75
	12/01/2015	$36.30	$7.30	$12.90	$0.00	$56.50
	06/01/2016	$37.05	$7.30	$12.90	$0.00	$57.25
	12/01/2016	$38.05	$7.30	$12.90	$0.00	$58.25
For apprentice rates see "Apprentice- LABORER"						
CARBIDE CORE DRILL OPERATOR *LABORERS - ZONE 1*	12/01/2013	$33.60	$7.30	$12.70	$0.00	$53.60
	06/01/2014	$34.35	$7.30	$12.70	$0.00	$54.35
	12/01/2014	$35.10	$7.30	$12.70	$0.00	$55.10
	06/01/2015	$35.85	$7.30	$12.70	$0.00	$55.85
	12/01/2015	$36.60	$7.30	$12.70	$0.00	$56.60
	06/01/2016	$37.35	$7.30	$12.70	$0.00	$57.35
	12/01/2016	$38.35	$7.30	$12.70	$0.00	$58.35
For apprentice rates see "Apprentice- LABORER"						
CARPENTER *CARPENTERS -ZONE 2 (Eastern Massachusetts)*	03/01/2014	$34.78	$9.80	$15.91	$0.00	$60.49
	09/01/2014	$35.55	$9.80	$15.91	$0.00	$61.26
	03/01/2015	$36.32	$9.80	$15.91	$0.00	$62.03

Classification	Effective Date	Base Wage	Health	Pension	Supplemental Unemployment	Total Rate

Apprentice - *CARPENTER - Zone 2 Eastern MA*

Effective Date - 03/01/2014

Step	percent	Apprentice Base Wage	Health	Pension	Supplemental Unemployment	Total Rate
1	50	$17.39	$9.80	$1.57	$0.00	$28.76
2	60	$20.87	$9.80	$1.57	$0.00	$32.24
3	70	$24.35	$9.80	$11.20	$0.00	$45.35
4	75	$26.09	$9.80	$11.20	$0.00	$47.09
5	80	$27.82	$9.80	$12.77	$0.00	$50.39
6	80	$27.82	$9.80	$12.77	$0.00	$50.39
7	90	$31.30	$9.80	$14.34	$0.00	$55.44
8	90	$31.30	$9.80	$14.34	$0.00	$55.44

Effective Date - 09/01/2014

Step	percent	Apprentice Base Wage	Health	Pension	Supplemental Unemployment	Total Rate
1	50	$17.78	$9.80	$1.57	$0.00	$29.15
2	60	$21.33	$9.80	$1.57	$0.00	$32.70
3	70	$24.89	$9.80	$11.20	$0.00	$45.89
4	75	$26.66	$9.80	$11.20	$0.00	$47.66
5	80	$28.44	$9.80	$12.77	$0.00	$51.01
6	80	$28.44	$9.80	$12.77	$0.00	$51.01
7	90	$32.00	$9.80	$14.34	$0.00	$56.14
8	90	$32.00	$9.80	$14.34	$0.00	$56.14

Notes:

Apprentice to Journeyworker Ratio:1:5

CEMENT MASONRY/PLASTERING *BRICKLAYERS LOCAL 3 (QUINCY)*	01/01/2014	$43.60	$10.90	$18.71	$1.30	$74.51
	07/01/2014	$43.77	$10.90	$18.71	$1.30	$74.68
	01/01/2015	$44.69	$10.90	$18.71	$1.30	$75.60
	07/01/2015	$45.29	$10.90	$18.71	$1.30	$76.20
	01/01/2016	$46.21	$10.90	$18.71	$1.30	$77.12

Classification	Effective Date	Base Wage	Health	Pension	Supplemental Unemployment	Total Rate

Apprentice - *CEMENT MASONRY/PLASTERING - Eastern Mass (Quincy)*

Effective Date - 01/01/2014

Step	percent	Apprentice Base Wage	Health	Pension	Supplemental Unemployment	Total Rate
1	50	$21.80	$10.90	$12.21	$1.30	$46.21
2	60	$26.16	$10.90	$13.71	$1.30	$52.07
3	65	$28.34	$10.90	$14.71	$1.30	$55.25
4	70	$30.52	$10.90	$15.71	$1.30	$58.43
5	75	$32.70	$10.90	$16.71	$1.30	$61.61
6	80	$34.88	$10.90	$17.71	$1.30	$64.79
7	90	$39.24	$10.90	$18.71	$1.30	$70.15

Effective Date - 07/01/2014

Step	percent	Apprentice Base Wage	Health	Pension	Supplemental Unemployment	Total Rate
1	50	$21.89	$10.90	$12.21	$1.30	$46.30
2	60	$26.26	$10.90	$13.71	$1.30	$52.17
3	65	$28.45	$10.90	$14.71	$1.30	$55.36
4	70	$30.64	$10.90	$15.71	$1.30	$58.55
5	75	$32.83	$10.90	$16.71	$1.30	$61.74
6	80	$35.02	$10.90	$17.71	$1.30	$64.93
7	90	$39.39	$10.90	$18.71	$1.30	$70.30

Notes:

Steps 3,4 are 500 hrs. All other steps are 1,000 hrs.

Apprentice to Journeyworker Ratio:1:3

CHAIN SAW OPERATOR *LABORERS - ZONE 1*	12/01/2013	$33.60	$7.30	$12.70	$0.00	$53.60
	06/01/2014	$34.35	$7.30	$12.70	$0.00	$54.35
	12/01/2014	$35.10	$7.30	$12.70	$0.00	$55.10
	06/01/2015	$35.85	$7.30	$12.70	$0.00	$55.85
	12/01/2015	$36.60	$7.30	$12.70	$0.00	$56.60
	06/01/2016	$37.35	$7.30	$12.70	$0.00	$57.35
	12/01/2016	$38.35	$7.30	$12.70	$0.00	$58.35
For apprentice rates see "Apprentice- LABORER"						
CLAM SHELLS/SLURRY BUCKETS/HEADING MACHINES *OPERATING ENGINEERS LOCAL 4*	12/01/2013	$41.49	$10.00	$14.18	$0.00	$65.67
For apprentice rates see "Apprentice- OPERATING ENGINEERS"						
COMPRESSOR OPERATOR *OPERATING ENGINEERS LOCAL 4*	12/01/2013	$28.11	$10.00	$14.18	$0.00	$52.29
For apprentice rates see "Apprentice- OPERATING ENGINEERS"						
DELEADER (BRIDGE) *PAINTERS LOCAL 35 - ZONE 2*	01/01/2014	$45.91	$7.85	$16.10	$0.00	$69.86
	07/01/2014	$46.76	$7.85	$16.10	$0.00	$70.71
	01/01/2015	$47.66	$7.85	$16.10	$0.00	$71.61
	07/01/2015	$48.56	$7.85	$16.10	$0.00	$72.51
	01/01/2016	$49.51	$7.85	$16.10	$0.00	$73.46
	07/01/2016	$50.46	$7.85	$16.10	$0.00	$74.41
	01/01/2017	$51.41	$7.85	$16.10	$0.00	$75.36

Classification	Effective Date	Base Wage	Health	Pension	Supplemental Unemployment	Total Rate

Apprentice - *PAINTER Local 35 - BRIDGES/TANKS*

Effective Date - 01/01/2014

Step	percent	Apprentice Base Wage	Health	Pension	Supplemental Unemployment	Total Rate
1	50	$22.96	$7.85	$0.00	$0.00	$30.81
2	55	$25.25	$7.85	$3.66	$0.00	$36.76
3	60	$27.55	$7.85	$3.99	$0.00	$39.39
4	65	$29.84	$7.85	$4.32	$0.00	$42.01
5	70	$32.14	$7.85	$14.11	$0.00	$54.10
6	75	$34.43	$7.85	$14.44	$0.00	$56.72
7	80	$36.73	$7.85	$14.77	$0.00	$59.35
8	90	$41.32	$7.85	$15.44	$0.00	$64.61

Effective Date - 07/01/2014

Step	percent	Apprentice Base Wage	Health	Pension	Supplemental Unemployment	Total Rate
1	50	$23.38	$7.85	$0.00	$0.00	$31.23
2	55	$25.72	$7.85	$3.66	$0.00	$37.23
3	60	$28.06	$7.85	$3.99	$0.00	$39.90
4	65	$30.39	$7.85	$4.32	$0.00	$42.56
5	70	$32.73	$7.85	$14.11	$0.00	$54.69
6	75	$35.07	$7.85	$14.44	$0.00	$57.36
7	80	$37.41	$7.85	$14.77	$0.00	$60.03
8	90	$42.08	$7.85	$15.44	$0.00	$65.37

Notes:

Steps are 750 hrs.

Apprentice to Journeyworker Ratio:1:1

DEMO: ADZEMAN *LABORERS - ZONE 1*	12/01/2013	$33.50	$7.30	$12.70	$0.00	$53.50
	06/01/2014	$34.25	$7.30	$12.70	$0.00	$54.25
	12/01/2014	$35.00	$7.30	$12.70	$0.00	$55.00
	06/01/2015	$35.75	$7.30	$12.70	$0.00	$55.75
	12/01/2015	$36.50	$7.30	$12.70	$0.00	$56.50
For apprentice rates see "Apprentice- LABORER"						
DEMO: BACKHOE/LOADER/HAMMER OPERATOR *LABORERS - ZONE 1*	12/01/2013	$34.50	$7.30	$12.70	$0.00	$54.50
	06/01/2014	$35.25	$7.30	$12.70	$0.00	$55.25
	12/01/2014	$36.00	$7.30	$12.70	$0.00	$56.00
	06/01/2015	$36.75	$7.30	$12.70	$0.00	$56.75
	12/01/2015	$37.50	$7.30	$12.70	$0.00	$57.50
For apprentice rates see "Apprentice- LABORER"						
DEMO: BURNERS *LABORERS - ZONE 1*	12/01/2013	$34.25	$7.30	$12.70	$0.00	$54.25
	06/01/2014	$35.00	$7.30	$12.70	$0.00	$55.00
	12/01/2014	$35.75	$7.30	$12.70	$0.00	$55.75
	06/01/2015	$36.50	$7.30	$12.70	$0.00	$56.50
	12/01/2015	$37.25	$7.30	$12.70	$0.00	$57.25
For apprentice rates see "Apprentice- LABORER"						

Classification	Effective Date	Base Wage	Health	Pension	Supplemental Unemployment	Total Rate
DEMO: CONCRETE CUTTER/SAWYER *LABORERS - ZONE 1*	12/01/2013	$34.50	$7.30	$12.70	$0.00	$54.50
	06/01/2014	$35.25	$7.30	$12.70	$0.00	$55.25
	12/01/2014	$36.00	$7.30	$12.70	$0.00	$56.00
	06/01/2015	$36.75	$7.30	$12.70	$0.00	$56.75
	12/01/2015	$37.50	$7.30	$12.70	$0.00	$57.50
For apprentice rates see "Apprentice- LABORER"						
DEMO: JACKHAMMER OPERATOR *LABORERS - ZONE 1*	12/01/2013	$34.25	$7.30	$12.70	$0.00	$54.25
	06/01/2014	$35.00	$7.30	$12.70	$0.00	$55.00
	12/01/2014	$35.75	$7.30	$12.70	$0.00	$55.75
	06/01/2015	$36.50	$7.30	$12.70	$0.00	$56.50
	12/01/2015	$37.25	$7.30	$12.70	$0.00	$57.25
For apprentice rates see "Apprentice- LABORER"						
DEMO: WRECKING LABORER *LABORERS - ZONE 1*	12/01/2013	$33.50	$7.30	$12.70	$0.00	$53.50
	06/01/2014	$34.25	$7.30	$12.70	$0.00	$54.25
	12/01/2014	$35.00	$7.30	$12.70	$0.00	$55.00
	06/01/2015	$35.75	$7.30	$12.70	$0.00	$55.75
	12/01/2015	$36.50	$7.30	$12.70	$0.00	$56.50
For apprentice rates see "Apprentice- LABORER"						
DIRECTIONAL DRILL MACHINE OPERATOR *OPERATING ENGINEERS LOCAL 4*	12/01/2013	$40.11	$10.00	$14.18	$0.00	$64.29
For apprentice rates see "Apprentice- OPERATING ENGINEERS"						
DIVER *PILE DRIVER LOCAL 56 (ZONE 1)*	08/01/2013	$56.14	$9.80	$18.17	$0.00	$84.11
	08/01/2014	$58.24	$9.80	$18.17	$0.00	$86.21
	08/01/2015	$60.34	$9.80	$18.17	$0.00	$88.31
DIVER TENDER *PILE DRIVER LOCAL 56 (ZONE 1)*	08/01/2013	$40.10	$9.80	$18.17	$0.00	$68.07
	08/01/2014	$41.60	$9.80	$18.17	$0.00	$69.57
	08/01/2015	$43.10	$9.80	$18.17	$0.00	$71.07
DIVER TENDER (EFFLUENT) *PILE DRIVER LOCAL 56 (ZONE 1)*	08/01/2013	$60.15	$9.80	$18.17	$0.00	$88.12
	08/01/2014	$62.40	$9.80	$18.17	$0.00	$90.37
	08/01/2015	$64.65	$9.80	$18.17	$0.00	$92.62
DIVER/SLURRY (EFFLUENT) *PILE DRIVER LOCAL 56 (ZONE 1)*	08/01/2013	$84.21	$9.80	$18.17	$0.00	$112.18
	08/01/2014	$87.36	$9.80	$18.17	$0.00	$115.33
	08/01/2015	$90.51	$9.80	$18.17	$0.00	$118.48
DRAWBRIDGE OPERATOR (Construction) *ELECTRICIANS LOCAL 103*	03/01/2014	$44.45	$13.00	$14.68	$0.00	$72.13
	09/01/2014	$45.12	$13.00	$14.70	$0.00	$72.82
	03/01/2015	$45.84	$13.00	$14.72	$0.00	$73.56
	09/01/2015	$46.80	$13.00	$14.75	$0.00	$74.55
	03/01/2016	$47.75	$13.00	$14.78	$0.00	$75.53
For apprentice rates see "Apprentice- ELECTRICIAN"						
ELECTRICIAN *ELECTRICIANS LOCAL 103*	03/01/2014	$44.45	$13.00	$14.68	$0.00	$72.13
	09/01/2014	$45.12	$13.00	$14.70	$0.00	$72.82
	03/01/2015	$45.84	$13.00	$14.72	$0.00	$73.56
	09/01/2015	$46.80	$13.00	$14.75	$0.00	$74.55
	03/01/2016	$47.75	$13.00	$14.78	$0.00	$75.53

Classification	Effective Date	Base Wage	Health	Pension	Supplemental Unemployment	Total Rate

Apprentice - *ELECTRICIAN - Local 103*

Effective Date - 03/01/2014

Step	percent	Apprentice Base Wage	Health	Pension	Supplemental Unemployment	Total Rate
1	40	$17.78	$13.00	$0.53	$0.00	$31.31
2	40	$17.78	$13.00	$0.53	$0.00	$31.31
3	45	$20.00	$13.00	$11.04	$0.00	$44.04
4	45	$20.00	$13.00	$11.04	$0.00	$44.04
5	50	$22.23	$13.00	$11.37	$0.00	$46.60
6	55	$24.45	$13.00	$11.70	$0.00	$49.15
7	60	$26.67	$13.00	$12.03	$0.00	$51.70
8	65	$28.89	$13.00	$12.37	$0.00	$54.26
9	70	$31.12	$13.00	$12.69	$0.00	$56.81
10	75	$33.34	$13.00	$13.03	$0.00	$59.37

Effective Date - 09/01/2014

Step	percent	Apprentice Base Wage	Health	Pension	Supplemental Unemployment	Total Rate
1	40	$18.05	$13.00	$0.54	$0.00	$31.59
2	40	$18.05	$13.00	$0.54	$0.00	$31.59
3	45	$20.30	$13.00	$11.05	$0.00	$44.35
4	45	$20.30	$13.00	$11.05	$0.00	$44.35
5	50	$22.56	$13.00	$11.38	$0.00	$46.94
6	55	$24.82	$13.00	$11.71	$0.00	$49.53
7	60	$27.07	$13.00	$12.04	$0.00	$52.11
8	65	$29.33	$13.00	$12.38	$0.00	$54.71
9	70	$31.58	$13.00	$12.71	$0.00	$57.29
10	75	$33.84	$13.00	$13.05	$0.00	$59.89

Notes: :

App Prior 1/1/03; 30/35/40/45/50/55/65/70/75/80

Apprentice to Journeyworker Ratio:2:3***

ELEVATOR CONSTRUCTOR *ELEVATOR CONSTRUCTORS LOCAL 4*	01/01/2012	$52.45	$8.78	$6.96	$0.00	$68.19

Classification	Effective Date	Base Wage	Health	Pension	Supplemental Unemployment	Total Rate

Apprentice - *ELEVATOR CONSTRUCTOR - Local 4*

Effective Date - 01/01/2012

Step	percent	Apprentice Base Wage	Health	Pension	Supplemental Unemployment	Total Rate
1	50	$26.23	$8.78	$0.00	$0.00	$35.01
2	55	$28.85	$8.78	$6.96	$0.00	$44.59
3	65	$34.09	$8.78	$6.96	$0.00	$49.83
4	70	$36.72	$8.78	$6.96	$0.00	$52.46
5	80	$41.96	$8.78	$6.96	$0.00	$57.70

Notes:

Steps 1-2 are 6 mos.; Steps 3-5 are 1 year

Apprentice to Journeyworker Ratio:1:1

ELEVATOR CONSTRUCTOR HELPER *ELEVATOR CONSTRUCTORS LOCAL 4*	01/01/2012	$38.59	$8.78	$6.96	$0.00	$54.33
For apprentice rates see "Apprentice - ELEVATOR CONSTRUCTOR"						
FENCE & GUARD RAIL ERECTOR *LABORERS - ZONE 1*	12/01/2013	$33.60	$7.30	$12.70	$0.00	$53.60
	06/01/2014	$34.35	$7.30	$12.70	$0.00	$54.35
	12/01/2014	$35.10	$7.30	$12.70	$0.00	$55.10
	06/01/2015	$35.85	$7.30	$12.70	$0.00	$55.85
	12/01/2015	$36.60	$7.30	$12.70	$0.00	$56.60
	06/01/2016	$37.35	$7.30	$12.70	$0.00	$57.35
	12/01/2016	$38.35	$7.30	$12.70	$0.00	$58.35
For apprentice rates see "Apprentice- LABORER"						
FIELD ENG.INST.PERSON-BLDG,SITE,HVY/HWY *OPERATING ENGINEERS LOCAL 4*	11/01/2013	$38.73	$10.00	$13.55	$0.00	$62.28
	05/01/2014	$38.87	$10.00	$14.18	$0.00	$63.05
For apprentice rates see "Apprentice- OPERATING ENGINEERS"						
FIELD ENG.PARTY CHIEF-BLDG,SITE,HVY/HWY *OPERATING ENGINEERS LOCAL 4*	11/01/2013	$40.15	$10.00	$13.55	$0.00	$63.70
	05/01/2014	$40.29	$10.00	$14.18	$0.00	$64.47
For apprentice rates see "Apprentice- OPERATING ENGINEERS"						
FIELD ENG.ROD PERSON-BLDG,SITE,HVY/HWY *OPERATING ENGINEERS LOCAL 4*	11/01/2013	$21.10	$10.00	$13.55	$0.00	$44.65
	05/01/2014	$20.92	$10.00	$14.18	$0.00	$45.10
For apprentice rates see "Apprentice- OPERATING ENGINEERS"						
FIRE ALARM INSTALLER *ELECTRICIANS LOCAL 103*	03/01/2014	$44.45	$13.00	$14.68	$0.00	$72.13
	09/01/2014	$45.12	$13.00	$14.70	$0.00	$72.82
	03/01/2015	$45.84	$13.00	$14.72	$0.00	$73.56
	09/01/2015	$46.80	$13.00	$14.75	$0.00	$74.55
	03/01/2016	$47.75	$13.00	$14.78	$0.00	$75.53
For apprentice rates see "Apprentice- ELECTRICIAN"						
FIRE ALARM REPAIR / MAINTENANCE / COMMISSIONING *ELECTRICIANS LOCAL 103*	03/01/2014	$33.44	$13.00	$13.03	$0.00	$59.47
	09/01/2014	$33.84	$13.00	$13.05	$0.00	$59.89
	03/01/2015	$34.38	$13.00	$13.06	$0.00	$60.44
	09/01/2015	$35.10	$13.00	$13.08	$0.00	$61.18
	03/01/2016	$35.81	$13.00	$13.10	$0.00	$61.91
For apprentice rates see "Apprentice- TELECOMMUNICATIONS TECHNICIAN"						

Classification	Effective Date	Base Wage	Health	Pension	Supplemental Unemployment	Total Rate
FIREMAN (ASST. ENGINEER) *OPERATING ENGINEERS LOCAL 4*	12/01/2013	$33.76	$10.00	$14.18	$0.00	$57.94
For apprentice rates see "Apprentice- OPERATING ENGINEERS"						
FLAGGER & SIGNALER *LABORERS - ZONE 1*	12/01/2013	$20.50	$7.30	$12.70	$0.00	$40.50
	06/01/2014	$20.50	$7.30	$12.70	$0.00	$40.50
	12/01/2014	$20.50	$7.30	$12.70	$0.00	$40.50
	06/01/2015	$20.50	$7.30	$12.70	$0.00	$40.50
	12/01/2015	$20.50	$7.30	$12.70	$0.00	$40.50
	06/01/2016	$20.50	$7.30	$12.70	$0.00	$40.50
	12/01/2016	$20.50	$7.30	$12.70	$0.00	$40.50
For apprentice rates see "Apprentice- LABORER"						
FLOORCOVERER *FLOORCOVERERS LOCAL 2168 ZONE I*	03/01/2014	$39.87	$9.80	$16.96	$0.00	$66.63

Apprentice - *FLOORCOVERER - Local 2168 Zone I*

Effective Date - 03/01/2014

Step	percent	Apprentice Base Wage	Health	Pension	Supplemental Unemployment	Total Rate
1	50	$19.94	$9.80	$1.79	$0.00	$31.53
2	55	$21.93	$9.80	$1.79	$0.00	$33.52
3	60	$23.92	$9.80	$11.59	$0.00	$45.31
4	65	$25.92	$9.80	$11.59	$0.00	$47.31
5	70	$27.91	$9.80	$13.38	$0.00	$51.09
6	75	$29.90	$9.80	$13.38	$0.00	$53.08
7	80	$31.90	$9.80	$15.17	$0.00	$56.87
8	85	$33.89	$9.80	$15.17	$0.00	$58.86

Notes:

Steps are 750 hrs.

Apprentice to Journeyworker Ratio:1:1

FORK LIFT/CHERRY PICKER *OPERATING ENGINEERS LOCAL 4*	12/01/2013	$40.49	$10.00	$14.18	$0.00	$64.67
For apprentice rates see "Apprentice- OPERATING ENGINEERS"						
GENERATOR/LIGHTING PLANT/HEATERS *OPERATING ENGINEERS LOCAL 4*	12/01/2013	$28.11	$10.00	$14.18	$0.00	$52.29
For apprentice rates see "Apprentice- OPERATING ENGINEERS"						
GLAZIER (GLASS PLANK/AIR BARRIER/INTERIOR SYSTEMS) *GLAZIERS LOCAL 35 (ZONE 2)*	01/01/2014	$35.41	$7.85	$16.10	$0.00	$59.36
	07/01/2014	$36.26	$7.85	$16.10	$0.00	$60.21
	01/01/2015	$37.16	$7.85	$16.10	$0.00	$61.11
	07/01/2015	$38.06	$7.85	$16.10	$0.00	$62.01
	01/01/2016	$39.01	$7.85	$16.10	$0.00	$62.96
	07/01/2016	$39.96	$7.85	$16.10	$0.00	$63.91
	01/01/2017	$40.91	$7.85	$16.10	$0.00	$64.86

Classification	Effective Date	Base Wage	Health	Pension	Supplemental Unemployment	Total Rate

Apprentice - *GLAZIER - Local 35 Zone 2*

Effective Date - 01/01/2014

Step	percent	Apprentice Base Wage	Health	Pension	Supplemental Unemployment	Total Rate
1	50	$17.71	$7.85	$0.00	$0.00	$25.56
2	55	$19.48	$7.85	$3.66	$0.00	$30.99
3	60	$21.25	$7.85	$3.99	$0.00	$33.09
4	65	$23.02	$7.85	$4.32	$0.00	$35.19
5	70	$24.79	$7.85	$14.11	$0.00	$46.75
6	75	$26.56	$7.85	$14.44	$0.00	$48.85
7	80	$28.33	$7.85	$14.77	$0.00	$50.95
8	90	$31.87	$7.85	$15.44	$0.00	$55.16

Effective Date - 07/01/2014

Step	percent	Apprentice Base Wage	Health	Pension	Supplemental Unemployment	Total Rate
1	50	$18.13	$7.85	$0.00	$0.00	$25.98
2	55	$19.94	$7.85	$3.66	$0.00	$31.45
3	60	$21.76	$7.85	$3.99	$0.00	$33.60
4	65	$23.57	$7.85	$4.32	$0.00	$35.74
5	70	$25.38	$7.85	$14.11	$0.00	$47.34
6	75	$27.20	$7.85	$14.44	$0.00	$49.49
7	80	$29.01	$7.85	$14.77	$0.00	$51.63
8	90	$32.63	$7.85	$15.44	$0.00	$55.92

Notes:

Steps are 750 hrs.

Apprentice to Journeyworker Ratio:1:1

HOISTING ENGINEER/CRANES/GRADALLS *OPERATING ENGINEERS LOCAL 4*	12/01/2013	$40.49	$10.00	$14.18	$0.00	$64.67

Classification	Effective Date	Base Wage	Health	Pension	Supplemental Unemployment	Total Rate

Apprentice - *OPERATING ENGINEERS - Local 4*

Effective Date - 12/01/2013

Step	percent	Apprentice Base Wage	Health	Pension	Supplemental Unemployment	Total Rate
1	55	$22.27	$10.00	$0.00	$0.00	$32.27
2	60	$24.29	$10.00	$14.18	$0.00	$48.47
3	65	$26.32	$10.00	$14.18	$0.00	$50.50
4	70	$28.34	$10.00	$14.18	$0.00	$52.52
5	75	$30.37	$10.00	$14.18	$0.00	$54.55
6	80	$32.39	$10.00	$14.18	$0.00	$56.57
7	85	$34.42	$10.00	$14.18	$0.00	$58.60
8	90	$36.44	$10.00	$14.18	$0.00	$60.62

Notes:

Apprentice to Journeyworker Ratio:1:6

HVAC (DUCTWORK) *SHEETMETAL WORKERS LOCAL 17 - A*	02/01/2014	$42.76	$9.82	$19.74	$2.17	$74.49
	08/01/2014	$43.61	$9.82	$19.74	$2.17	$75.34
	02/01/2015	$44.51	$9.82	$19.74	$2.17	$76.24
	08/01/2015	$45.51	$9.82	$19.74	$2.17	$77.24
	02/01/2016	$46.51	$9.82	$19.74	$2.17	$78.24
	08/01/2016	$47.66	$9.82	$19.74	$2.17	$79.39
	02/01/2017	$48.76	$9.82	$19.74	$2.17	$80.49
	08/01/2017	$49.86	$9.82	$19.74	$2.17	$81.59
	02/01/2018	$51.01	$9.82	$19.74	$2.17	$82.74
For apprentice rates see "Apprentice- SHEET METAL WORKER"						
HVAC (ELECTRICAL CONTROLS) *ELECTRICIANS LOCAL 103*	03/01/2014	$44.45	$13.00	$14.68	$0.00	$72.13
	09/01/2014	$45.12	$13.00	$14.70	$0.00	$72.82
	03/01/2015	$45.84	$13.00	$14.72	$0.00	$73.56
	09/01/2015	$46.80	$13.00	$14.75	$0.00	$74.55
	03/01/2016	$47.75	$13.00	$14.78	$0.00	$75.53
For apprentice rates see "Apprentice- ELECTRICIAN"						
HVAC (TESTING AND BALANCING - AIR) *SHEETMETAL WORKERS LOCAL 17 - A*	02/01/2014	$42.76	$9.82	$19.74	$2.17	$74.49
	08/01/2014	$43.61	$9.82	$19.74	$2.17	$75.34
	02/01/2015	$44.51	$9.82	$19.74	$2.17	$76.24
	08/01/2015	$45.51	$9.82	$19.74	$2.17	$77.24
	02/01/2016	$46.51	$9.82	$19.74	$2.17	$78.24
	08/01/2016	$47.66	$9.82	$19.74	$2.17	$79.39
	02/01/2017	$48.76	$9.82	$19.74	$2.17	$80.49
	08/01/2017	$49.86	$9.82	$19.74	$2.17	$81.59
	02/01/2018	$51.01	$9.82	$19.74	$2.17	$82.74
For apprentice rates see "Apprentice- SHEET METAL WORKER"						
HVAC (TESTING AND BALANCING -WATER) *PIPEFITTERS LOCAL 537*	03/01/2013	$49.34	$8.75	$14.39	$0.00	$72.48
For apprentice rates see "Apprentice- PIPEFITTER" or "PLUMBER/PIPEFITTER"						

Classification	Effective Date	Base Wage	Health	Pension	Supplemental Unemployment	Total Rate
HVAC MECHANIC *PIPEFITTERS LOCAL 537*	03/01/2013	$49.34	$8.75	$14.39	$0.00	$72.48
For apprentice rates see "Apprentice- PIPEFITTER" or "PLUMBER/PIPEFITTER"						
HYDRAULIC DRILLS *LABORERS - ZONE 1*	12/01/2013	$34.10	$7.30	$12.70	$0.00	$54.10
	06/01/2014	$34.85	$7.30	$12.70	$0.00	$54.85
	12/01/2014	$35.60	$7.30	$12.70	$0.00	$55.60
	06/01/2015	$36.35	$7.30	$12.70	$0.00	$56.35
	12/01/2015	$37.10	$7.30	$12.70	$0.00	$57.10
	06/01/2016	$37.85	$7.30	$12.70	$0.00	$57.85
	12/01/2016	$38.85	$7.30	$12.70	$0.00	$58.85
For apprentice rates see "Apprentice- LABORER"						
INSULATOR (PIPES & TANKS) *HEAT & FROST INSULATORS LOCAL 6 (BOSTON)*	09/01/2013	$42.11	$10.95	$12.10	$0.00	$65.16
	09/01/2014	$44.11	$10.95	$12.10	$0.00	$67.16

Apprentice - *ASBESTOS INSULATOR (Pipes & Tanks) - Local 6 Boston*

Effective Date - 09/01/2013

Step	percent	Apprentice Base Wage	Health	Pension	Supplemental Unemployment	Total Rate
1	50	$21.06	$10.95	$9.00	$0.00	$41.01
2	60	$25.27	$10.95	$9.62	$0.00	$45.84
3	70	$29.48	$10.95	$10.24	$0.00	$50.67
4	80	$33.69	$10.95	$10.86	$0.00	$55.50

Effective Date - 09/01/2014

Step	percent	Apprentice Base Wage	Health	Pension	Supplemental Unemployment	Total Rate
1	50	$22.06	$10.95	$9.00	$0.00	$42.01
2	60	$26.47	$10.95	$9.62	$0.00	$47.04
3	70	$30.88	$10.95	$10.24	$0.00	$52.07
4	80	$35.29	$10.95	$10.86	$0.00	$57.10

Notes:

Steps are 1 year

Apprentice to Journeyworker Ratio:1:4

IRONWORKER/WELDER *IRONWORKERS LOCAL 7 (BOSTON AREA)*	03/16/2014	$41.19	$7.70	$19.25	$0.00	$68.14

Classification	Effective Date	Base Wage	Health	Pension	Supplemental Unemployment	Total Rate

Apprentice - *IRONWORKER - Local 7 Boston*

Effective Date - 03/16/2014

Step	percent	Apprentice Base Wage	Health	Pension	Supplemental Unemployment	Total Rate
1	60	$24.71	$7.70	$19.25	$0.00	$51.66
2	70	$28.83	$7.70	$19.25	$0.00	$55.78
3	75	$30.89	$7.70	$19.25	$0.00	$57.84
4	80	$32.95	$7.70	$19.25	$0.00	$59.90
5	85	$35.01	$7.70	$19.25	$0.00	$61.96
6	90	$37.07	$7.70	$19.25	$0.00	$64.02

Notes:

** Structural 1:6; Ornamental 1:4

Apprentice to Journeyworker Ratio:**

JACKHAMMER & PAVING BREAKER OPERATOR *LABORERS - ZONE 1*	12/01/2013	$33.60	$7.30	$12.70	$0.00	$53.60
	06/01/2014	$34.35	$7.30	$12.70	$0.00	$54.35
	12/01/2014	$35.10	$7.30	$12.70	$0.00	$55.10
	06/01/2015	$35.85	$7.30	$12.70	$0.00	$55.85
	12/01/2015	$36.60	$7.30	$12.70	$0.00	$56.60
	06/01/2016	$37.35	$7.30	$12.70	$0.00	$57.35
	12/01/2016	$38.35	$7.30	$12.70	$0.00	$58.35
For apprentice rates see "Apprentice- LABORER"						
LABORER *LABORERS - ZONE 1*	12/01/2013	$33.35	$7.30	$12.70	$0.00	$53.35
	06/01/2014	$34.10	$7.30	$12.70	$0.00	$54.10
	12/01/2014	$34.85	$7.30	$12.70	$0.00	$54.85
	06/01/2015	$35.60	$7.30	$12.70	$0.00	$55.60
	12/01/2015	$36.35	$7.30	$12.70	$0.00	$56.35
	06/01/2016	$37.10	$7.30	$12.70	$0.00	$57.10
	12/01/2016	$38.10	$7.30	$12.70	$0.00	$58.10

Classification	Effective Date	Base Wage	Health	Pension	Supplemental Unemployment	Total Rate

Apprentice - *LABORER - Zone 1*

Effective Date - 12/01/2013

Step	percent	Apprentice Base Wage	Health	Pension	Supplemental Unemployment	Total Rate
1	60	$20.01	$7.30	$12.70	$0.00	$40.01
2	70	$23.35	$7.30	$12.70	$0.00	$43.35
3	80	$26.68	$7.30	$12.70	$0.00	$46.68
4	90	$30.02	$7.30	$12.70	$0.00	$50.02

Effective Date - 06/01/2014

Step	percent	Apprentice Base Wage	Health	Pension	Supplemental Unemployment	Total Rate
1	60	$20.46	$7.30	$12.70	$0.00	$40.46
2	70	$23.87	$7.30	$12.70	$0.00	$43.87
3	80	$27.28	$7.30	$12.70	$0.00	$47.28
4	90	$30.69	$7.30	$12.70	$0.00	$50.69

Notes:

Apprentice to Journeyworker Ratio:1:5

LABORER: CARPENTER TENDER *LABORERS - ZONE 1*	12/01/2013	$33.35	$7.30	$12.70	$0.00	$53.35
	06/01/2014	$34.10	$7.30	$12.70	$0.00	$54.10
	12/01/2014	$34.85	$7.30	$12.70	$0.00	$54.85
	06/01/2015	$35.60	$7.30	$12.70	$0.00	$55.60
	12/01/2015	$36.35	$7.30	$12.70	$0.00	$56.35
	06/01/2016	$37.10	$7.30	$12.70	$0.00	$57.10
	12/01/2016	$38.10	$7.30	$12.70	$0.00	$58.10
For apprentice rates see "Apprentice- LABORER"						
LABORER: CEMENT FINISHER TENDER *LABORERS - ZONE 1*	12/01/2013	$33.35	$7.30	$12.70	$0.00	$53.35
	06/01/2014	$34.10	$7.30	$12.70	$0.00	$54.10
	12/01/2014	$34.85	$7.30	$12.70	$0.00	$54.85
	06/01/2015	$35.60	$7.30	$12.70	$0.00	$55.60
	12/01/2015	$36.35	$7.30	$12.70	$0.00	$56.35
	06/01/2016	$37.10	$7.30	$12.70	$0.00	$57.10
	12/01/2016	$38.10	$7.30	$12.70	$0.00	$58.10
For apprentice rates see "Apprentice- LABORER"						
LABORER: HAZARDOUS WASTE/ASBESTOS REMOVER *LABORERS - ZONE 1*	12/01/2013	$33.50	$7.30	$12.70	$0.00	$53.50
	06/01/2014	$34.25	$7.30	$12.70	$0.00	$54.25
	12/01/2014	$35.00	$7.30	$12.70	$0.00	$55.00
	06/01/2015	$35.75	$7.30	$12.70	$0.00	$55.75
	12/01/2015	$36.50	$7.30	$12.70	$0.00	$56.50
For apprentice rates see "Apprentice- LABORER"						

Classification	Effective Date	Base Wage	Health	Pension	Supplemental Unemployment	Total Rate
LABORER: MASON TENDER *LABORERS - ZONE 1*	12/01/2013	$33.60	$7.30	$12.70	$0.00	$53.60
	06/01/2014	$34.35	$7.30	$12.70	$0.00	$54.35
	12/01/2014	$35.10	$7.30	$12.70	$0.00	$55.10
	06/01/2015	$35.85	$7.30	$12.70	$0.00	$55.85
	12/01/2015	$36.60	$7.30	$12.70	$0.00	$56.60
	06/01/2016	$37.35	$7.30	$12.70	$0.00	$57.35
	12/01/2016	$38.35	$7.30	$12.70	$0.00	$58.35
For apprentice rates see "Apprentice- LABORER"						
LABORER: MULTI-TRADE TENDER *LABORERS - ZONE 1*	12/01/2013	$33.35	$7.30	$12.70	$0.00	$53.35
	06/01/2014	$34.10	$7.30	$12.70	$0.00	$54.10
	12/01/2014	$34.85	$7.30	$12.70	$0.00	$54.85
	06/01/2015	$35.60	$7.30	$12.70	$0.00	$55.60
	12/01/2015	$36.35	$7.30	$12.70	$0.00	$56.35
	06/01/2016	$37.10	$7.30	$12.70	$0.00	$57.10
	12/01/2016	$38.10	$7.30	$12.70	$0.00	$58.10
For apprentice rates see "Apprentice- LABORER"						
LABORER: TREE REMOVER *LABORERS - ZONE 1*	12/01/2013	$33.35	$7.30	$12.70	$0.00	$53.35
	06/01/2014	$34.10	$7.30	$12.70	$0.00	$54.10
	12/01/2014	$34.85	$7.30	$12.70	$0.00	$54.85
	06/01/2015	$35.60	$7.30	$12.70	$0.00	$55.60
	12/01/2015	$36.35	$7.30	$12.70	$0.00	$56.35
	06/01/2016	$37.10	$7.30	$12.70	$0.00	$57.10
	12/01/2016	$38.10	$7.30	$12.70	$0.00	$58.10
This classification applies to all tree work associated with the removal of standing trees, and trimming and removal of branches and limbs when the work is not done for a utility company for the purpose of operation, maintenance or repair of utility company equipment. For apprentice rates see "Apprentice- LABORER"						
LASER BEAM OPERATOR *LABORERS - ZONE 1*	12/01/2013	$33.60	$7.30	$12.70	$0.00	$53.60
	06/01/2014	$34.35	$7.30	$12.70	$0.00	$54.35
	12/01/2014	$35.10	$7.30	$12.70	$0.00	$55.10
	06/01/2015	$35.85	$7.30	$12.70	$0.00	$55.85
	12/01/2015	$36.60	$7.30	$12.70	$0.00	$56.60
	06/01/2016	$37.35	$7.30	$12.70	$0.00	$57.35
	12/01/2016	$38.35	$7.30	$12.70	$0.00	$58.35
For apprentice rates see "Apprentice- LABORER"						
MARBLE & TILE FINISHERS *BRICKLAYERS LOCAL 3 - MARBLE & TILE*	02/01/2014	$36.66	$10.18	$16.83	$0.00	$63.67
	08/01/2014	$37.37	$10.18	$16.90	$0.00	$64.45
	02/01/2015	$37.82	$10.18	$16.90	$0.00	$64.90
	08/01/2015	$38.53	$10.18	$16.97	$0.00	$65.68
	02/01/2016	$38.98	$10.18	$16.97	$0.00	$66.13
	08/01/2016	$39.68	$10.18	$17.05	$0.00	$66.91
	02/01/2017	$40.14	$10.18	$17.05	$0.00	$67.37

Classification	Effective Date	Base Wage	Health	Pension	Supplemental Unemployment	Total Rate

Apprentice - *MARBLE & TILE FINISHER - Local 3 Marble & Tile*

Effective Date - 02/01/2014

Step	percent	Apprentice Base Wage	Health	Pension	Supplemental Unemployment	Total Rate
1	50	$18.33	$10.18	$16.83	$0.00	$45.34
2	60	$22.00	$10.18	$16.83	$0.00	$49.01
3	70	$25.66	$10.18	$16.83	$0.00	$52.67
4	80	$29.33	$10.18	$16.83	$0.00	$56.34
5	90	$32.99	$10.18	$16.83	$0.00	$60.00

Effective Date - 08/01/2014

Step	percent	Apprentice Base Wage	Health	Pension	Supplemental Unemployment	Total Rate
1	50	$18.69	$10.18	$16.90	$0.00	$45.77
2	60	$22.42	$10.18	$16.90	$0.00	$49.50
3	70	$26.16	$10.18	$16.90	$0.00	$53.24
4	80	$29.90	$10.18	$16.90	$0.00	$56.98
5	90	$33.63	$10.18	$16.90	$0.00	$60.71

Notes:

Apprentice to Journeyworker Ratio:1:3

MARBLE MASONS,TILELAYERS & TERRAZZO MECH *BRICKLAYERS LOCAL 3 - MARBLE & TILE*	02/01/2014	$48.10	$10.18	$18.15	$0.00	$76.43
	08/01/2014	$49.00	$10.18	$18.22	$0.00	$77.40
	02/01/2015	$49.56	$10.18	$18.22	$0.00	$77.96
	08/01/2015	$50.46	$10.18	$18.29	$0.00	$78.93
	02/01/2016	$51.03	$10.18	$18.29	$0.00	$79.50
	08/01/2016	$51.93	$10.18	$18.37	$0.00	$80.48
	02/01/2017	$52.50	$10.18	$18.37	$0.00	$81.05

Classification	Effective Date	Base Wage	Health	Pension	Supplemental Unemployment	Total Rate

Apprentice - *MARBLE-TILE-TERRAZZO MECHANIC - Local 3 Marble & Tile*

Effective Date - 02/01/2014

Step	percent	Apprentice Base Wage	Health	Pension	Supplemental Unemployment	Total Rate
1	50	$24.05	$10.18	$18.15	$0.00	$52.38
2	60	$28.86	$10.18	$18.15	$0.00	$57.19
3	70	$33.67	$10.18	$18.15	$0.00	$62.00
4	80	$38.48	$10.18	$18.15	$0.00	$66.81
5	90	$43.29	$10.18	$18.15	$0.00	$71.62

Effective Date - 08/01/2014

Step	percent	Apprentice Base Wage	Health	Pension	Supplemental Unemployment	Total Rate
1	50	$24.50	$10.18	$18.22	$0.00	$52.90
2	60	$29.40	$10.18	$18.22	$0.00	$57.80
3	70	$34.30	$10.18	$18.22	$0.00	$62.70
4	80	$39.20	$10.18	$18.22	$0.00	$67.60
5	90	$44.10	$10.18	$18.22	$0.00	$72.50

Notes:

Apprentice to Journeyworker Ratio:1:5

MECH. SWEEPER OPERATOR (ON CONST. SITES) *OPERATING ENGINEERS LOCAL 4*	12/01/2013	$40.11	$10.00	$14.18	$0.00	$64.29
For apprentice rates see "Apprentice- OPERATING ENGINEERS"						
MECHANICS MAINTENANCE *OPERATING ENGINEERS LOCAL 4*	12/01/2013	$40.11	$10.00	$14.18	$0.00	$64.29
For apprentice rates see "Apprentice- OPERATING ENGINEERS"						
MILLWRIGHT (Zone 1) *MILLWRIGHTS LOCAL 1121 - Zone 1*	04/01/2014	$35.73	$9.80	$16.21	$0.00	$61.74
	10/01/2014	$36.68	$9.80	$16.21	$0.00	$62.69
	04/01/2015	$37.64	$9.80	$16.21	$0.00	$63.65

Classification	Effective Date	Base Wage	Health	Pension	Supplemental Unemployment	Total Rate

Apprentice - *MILLWRIGHT - Local 1121 Zone 1*

Effective Date - 04/01/2014

Step	percent	Apprentice Base Wage	Health	Pension	Supplemental Unemployment	Total Rate
1	55	$19.65	$9.80	$4.48	$0.00	$33.93
2	65	$23.22	$9.80	$13.36	$0.00	$46.38
3	75	$26.80	$9.80	$14.18	$0.00	$50.78
4	85	$30.37	$9.80	$14.99	$0.00	$55.16

Effective Date - 10/01/2014

Step	percent	Apprentice Base Wage	Health	Pension	Supplemental Unemployment	Total Rate
1	55	$20.17	$9.80	$4.48	$0.00	$34.45
2	65	$23.84	$9.80	$13.36	$0.00	$47.00
3	75	$27.51	$9.80	$14.18	$0.00	$51.49
4	85	$31.18	$9.80	$14.99	$0.00	$55.97

Notes:

Steps are 2,000 hours

Apprentice to Journeyworker Ratio:1:5

MORTAR MIXER *LABORERS - ZONE 1*	12/01/2013	$33.60	$7.30	$12.70	$0.00	$53.60
	06/01/2014	$34.35	$7.30	$12.70	$0.00	$54.35
	12/01/2014	$35.10	$7.30	$12.70	$0.00	$55.10
	06/01/2015	$35.85	$7.30	$12.70	$0.00	$55.85
	12/01/2015	$36.60	$7.30	$12.70	$0.00	$56.60
	06/01/2016	$37.35	$7.30	$12.70	$0.00	$57.35
	12/01/2016	$38.35	$7.30	$12.70	$0.00	$58.35
For apprentice rates see "Apprentice- LABORER"						
OILER (OTHER THAN TRUCK CRANES,GRADALLS) *OPERATING ENGINEERS LOCAL 4*	12/01/2013	$20.96	$10.00	$14.18	$0.00	$45.14
For apprentice rates see "Apprentice- OPERATING ENGINEERS"						
OILER (TRUCK CRANES, GRADALLS) *OPERATING ENGINEERS LOCAL 4*	12/01/2013	$24.43	$10.00	$14.18	$0.00	$48.61
For apprentice rates see "Apprentice- OPERATING ENGINEERS"						
OTHER POWER DRIVEN EQUIPMENT - CLASS II *OPERATING ENGINEERS LOCAL 4*	12/01/2013	$40.11	$10.00	$14.18	$0.00	$64.29
For apprentice rates see "Apprentice- OPERATING ENGINEERS"						
PAINTER (BRIDGES/TANKS) *PAINTERS LOCAL 35 - ZONE 2*	01/01/2014	$45.91	$7.85	$16.10	$0.00	$69.86
	07/01/2014	$46.76	$7.85	$16.10	$0.00	$70.71
	01/01/2015	$47.66	$7.85	$16.10	$0.00	$71.61
	07/01/2015	$48.56	$7.85	$16.10	$0.00	$72.51
	01/01/2016	$49.51	$7.85	$16.10	$0.00	$73.46
	07/01/2016	$50.46	$7.85	$16.10	$0.00	$74.41
	01/01/2017	$51.41	$7.85	$16.10	$0.00	$75.36

Classification	Effective Date	Base Wage	Health	Pension	Supplemental Unemployment	Total Rate

Apprentice - *PAINTER Local 35 - BRIDGES/TANKS*

Effective Date - 01/01/2014

Step	percent	Apprentice Base Wage	Health	Pension	Supplemental Unemployment	Total Rate
1	50	$22.96	$7.85	$0.00	$0.00	$30.81
2	55	$25.25	$7.85	$3.66	$0.00	$36.76
3	60	$27.55	$7.85	$3.99	$0.00	$39.39
4	65	$29.84	$7.85	$4.32	$0.00	$42.01
5	70	$32.14	$7.85	$14.11	$0.00	$54.10
6	75	$34.43	$7.85	$14.44	$0.00	$56.72
7	80	$36.73	$7.85	$14.77	$0.00	$59.35
8	90	$41.32	$7.85	$15.44	$0.00	$64.61

Effective Date - 07/01/2014

Step	percent	Apprentice Base Wage	Health	Pension	Supplemental Unemployment	Total Rate
1	50	$23.38	$7.85	$0.00	$0.00	$31.23
2	55	$25.72	$7.85	$3.66	$0.00	$37.23
3	60	$28.06	$7.85	$3.99	$0.00	$39.90
4	65	$30.39	$7.85	$4.32	$0.00	$42.56
5	70	$32.73	$7.85	$14.11	$0.00	$54.69
6	75	$35.07	$7.85	$14.44	$0.00	$57.36
7	80	$37.41	$7.85	$14.77	$0.00	$60.03
8	90	$42.08	$7.85	$15.44	$0.00	$65.37

Notes:

Steps are 750 hrs.

Apprentice to Journeyworker Ratio:1:1

PAINTER (SPRAY OR SANDBLAST, NEW) *	01/01/2014	$36.81	$7.85	$16.10	$0.00	$60.76
* If 30% or more of surfaces to be painted are new construction, NEW paint rate shall be used.*PAINTERS LOCAL 35 - ZONE 2*	07/01/2014	$37.66	$7.85	$16.10	$0.00	$61.61
	01/01/2015	$38.56	$7.85	$16.10	$0.00	$62.51
	07/01/2015	$39.46	$7.85	$16.10	$0.00	$63.41
	01/01/2016	$40.41	$7.85	$16.10	$0.00	$64.36
	07/01/2016	$41.36	$7.85	$16.10	$0.00	$65.31
	01/01/2017	$42.31	$7.85	$16.10	$0.00	$66.26

Classification	Effective Date	Base Wage	Health	Pension	Supplemental Unemployment	Total Rate

Apprentice - *PAINTER Local 35 Zone 2 - Spray/Sandblast - New*

Effective Date - 01/01/2014

Step	percent	Apprentice Base Wage	Health	Pension	Supplemental Unemployment	Total Rate
1	50	$18.41	$7.85	$0.00	$0.00	$26.26
2	55	$20.25	$7.85	$3.66	$0.00	$31.76
3	60	$22.09	$7.85	$3.99	$0.00	$33.93
4	65	$23.93	$7.85	$4.32	$0.00	$36.10
5	70	$25.77	$7.85	$14.11	$0.00	$47.73
6	75	$27.61	$7.85	$14.44	$0.00	$49.90
7	80	$29.45	$7.85	$14.77	$0.00	$52.07
8	90	$33.13	$7.85	$15.44	$0.00	$56.42

Effective Date - 07/01/2014

Step	percent	Apprentice Base Wage	Health	Pension	Supplemental Unemployment	Total Rate
1	50	$18.83	$7.85	$0.00	$0.00	$26.68
2	55	$20.71	$7.85	$3.66	$0.00	$32.22
3	60	$22.60	$7.85	$3.99	$0.00	$34.44
4	65	$24.48	$7.85	$4.32	$0.00	$36.65
5	70	$26.36	$7.85	$14.11	$0.00	$48.32
6	75	$28.25	$7.85	$14.44	$0.00	$50.54
7	80	$30.13	$7.85	$14.77	$0.00	$52.75
8	90	$33.89	$7.85	$15.44	$0.00	$57.18

Notes:

Steps are 750 hrs.

Apprentice to Journeyworker Ratio:1:1

PAINTER (SPRAY OR SANDBLAST, REPAINT) *PAINTERS LOCAL 35 - ZONE 2*	01/01/2014	$34.87	$7.85	$16.10	$0.00	$58.82
	07/01/2014	$35.72	$7.85	$16.10	$0.00	$59.67
	01/01/2015	$36.62	$7.85	$16.10	$0.00	$60.57
	07/01/2015	$37.52	$7.85	$16.10	$0.00	$61.47
	01/01/2016	$38.47	$7.85	$16.10	$0.00	$62.42
	07/01/2016	$39.42	$7.85	$16.10	$0.00	$63.37
	01/01/2017	$40.37	$7.85	$16.10	$0.00	$64.32

Classification	Effective Date	Base Wage	Health	Pension	Supplemental Unemployment	Total Rate

Apprentice - *PAINTER Local 35 Zone 2 - Spray/Sandblast - Repaint*

Effective Date - 01/01/2014

Step	percent	Apprentice Base Wage	Health	Pension	Supplemental Unemployment	Total Rate
1	50	$17.44	$7.85	$0.00	$0.00	$25.29
2	55	$19.18	$7.85	$3.66	$0.00	$30.69
3	60	$20.92	$7.85	$3.99	$0.00	$32.76
4	65	$22.67	$7.85	$4.32	$0.00	$34.84
5	70	$24.41	$7.85	$14.11	$0.00	$46.37
6	75	$26.15	$7.85	$14.44	$0.00	$48.44
7	80	$27.90	$7.85	$14.77	$0.00	$50.52
8	90	$31.38	$7.85	$15.44	$0.00	$54.67

Effective Date - 07/01/2014

Step	percent	Apprentice Base Wage	Health	Pension	Supplemental Unemployment	Total Rate
1	50	$17.86	$7.85	$0.00	$0.00	$25.71
2	55	$19.65	$7.85	$3.66	$0.00	$31.16
3	60	$21.43	$7.85	$3.99	$0.00	$33.27
4	65	$23.22	$7.85	$4.32	$0.00	$35.39
5	70	$25.00	$7.85	$14.11	$0.00	$46.96
6	75	$26.79	$7.85	$14.44	$0.00	$49.08
7	80	$28.58	$7.85	$14.77	$0.00	$51.20
8	90	$32.15	$7.85	$15.44	$0.00	$55.44

Notes:
Steps are 750 hrs.

Apprentice to Journeyworker Ratio:1:1

PAINTER (TRAFFIC MARKINGS) *LABORERS - ZONE 1*	12/01/2013	$33.35	$7.30	$12.70	$0.00	$53.35
	06/01/2014	$34.10	$7.30	$12.70	$0.00	$54.10
	12/01/2014	$34.85	$7.30	$12.70	$0.00	$54.85
	06/01/2015	$35.60	$7.30	$12.70	$0.00	$55.60
	12/01/2015	$36.35	$7.30	$12.70	$0.00	$56.35
	06/01/2016	$37.10	$7.30	$12.70	$0.00	$57.10
	12/01/2016	$38.10	$7.30	$12.70	$0.00	$58.10
For Apprentice rates see "Apprentice- LABORER"						
PAINTER / TAPER (BRUSH, NEW) * * If 30% or more of surfaces to be painted are new construction, NEW paint rate shall be used.*PAINTERS LOCAL 35 - ZONE 2*	01/01/2014	$35.41	$7.85	$16.10	$0.00	$59.36
	07/01/2014	$36.26	$7.85	$16.10	$0.00	$60.21
	01/01/2015	$37.16	$7.85	$16.10	$0.00	$61.11
	07/01/2015	$38.06	$7.85	$16.10	$0.00	$62.01
	01/01/2016	$39.01	$7.85	$16.10	$0.00	$62.96
	07/01/2016	$39.96	$7.85	$16.10	$0.00	$63.91
	01/01/2017	$40.91	$7.85	$16.10	$0.00	$64.86

Classification	Effective Date	Base Wage	Health	Pension	Supplemental Unemployment	Total Rate

Apprentice - *PAINTER - Local 35 Zone 2 - BRUSH NEW*

Effective Date - 01/01/2014

Step	percent	Apprentice Base Wage	Health	Pension	Supplemental Unemployment	Total Rate
1	50	$17.71	$7.85	$0.00	$0.00	$25.56
2	55	$19.48	$7.85	$3.66	$0.00	$30.99
3	60	$21.25	$7.85	$3.99	$0.00	$33.09
4	65	$23.02	$7.85	$4.32	$0.00	$35.19
5	70	$24.79	$7.85	$14.11	$0.00	$46.75
6	75	$26.56	$7.85	$14.44	$0.00	$48.85
7	80	$28.33	$7.85	$14.77	$0.00	$50.95
8	90	$31.87	$7.85	$15.44	$0.00	$55.16

Effective Date - 07/01/2014

Step	percent	Apprentice Base Wage	Health	Pension	Supplemental Unemployment	Total Rate
1	50	$18.13	$7.85	$0.00	$0.00	$25.98
2	55	$19.94	$7.85	$3.66	$0.00	$31.45
3	60	$21.76	$7.85	$3.99	$0.00	$33.60
4	65	$23.57	$7.85	$4.32	$0.00	$35.74
5	70	$25.38	$7.85	$14.11	$0.00	$47.34
6	75	$27.20	$7.85	$14.44	$0.00	$49.49
7	80	$29.01	$7.85	$14.77	$0.00	$51.63
8	90	$32.63	$7.85	$15.44	$0.00	$55.92

Notes:

Steps are 750 hrs.

Apprentice to Journeyworker Ratio:1:1

PAINTER / TAPER (BRUSH, REPAINT) *PAINTERS LOCAL 35 - ZONE 2*	01/01/2014	$33.47	$7.85	$16.10	$0.00	$57.42
	07/01/2014	$34.32	$7.85	$16.10	$0.00	$58.27
	01/01/2015	$35.22	$7.85	$16.10	$0.00	$59.17
	07/01/2015	$36.12	$7.85	$16.10	$0.00	$60.07
	01/01/2016	$37.07	$7.85	$16.10	$0.00	$61.02
	07/01/2016	$38.02	$7.85	$16.10	$0.00	$61.97
	01/01/2017	$38.97	$7.85	$16.10	$0.00	$62.92

Classification	Effective Date	Base Wage	Health	Pension	Supplemental Unemployment	Total Rate

Apprentice - *PAINTER Local 35 Zone 2 - BRUSH REPAINT*

Effective Date - 01/01/2014

Step	percent	Apprentice Base Wage	Health	Pension	Supplemental Unemployment	Total Rate
1	50	$16.74	$7.85	$0.00	$0.00	$24.59
2	55	$18.41	$7.85	$3.66	$0.00	$29.92
3	60	$20.08	$7.85	$3.99	$0.00	$31.92
4	65	$21.76	$7.85	$4.32	$0.00	$33.93
5	70	$23.43	$7.85	$14.11	$0.00	$45.39
6	75	$25.10	$7.85	$14.44	$0.00	$47.39
7	80	$26.78	$7.85	$14.77	$0.00	$49.40
8	90	$30.12	$7.85	$15.44	$0.00	$53.41

Effective Date - 07/01/2014

Step	percent	Apprentice Base Wage	Health	Pension	Supplemental Unemployment	Total Rate
1	50	$17.16	$7.85	$0.00	$0.00	$25.01
2	55	$18.88	$7.85	$3.66	$0.00	$30.39
3	60	$20.59	$7.85	$3.99	$0.00	$32.43
4	65	$22.31	$7.85	$4.32	$0.00	$34.48
5	70	$24.02	$7.85	$14.11	$0.00	$45.98
6	75	$25.74	$7.85	$14.44	$0.00	$48.03
7	80	$27.46	$7.85	$14.77	$0.00	$50.08
8	90	$30.89	$7.85	$15.44	$0.00	$54.18

Notes:

Steps are 750 hrs.

Apprentice to Journeyworker Ratio:1:1

PANEL & PICKUP TRUCKS DRIVER *TEAMSTERS JOINT COUNCIL NO. 10 ZONE A*	12/01/2013	$31.88	$9.41	$8.80	$0.00	$50.09
	06/01/2014	$32.23	$9.41	$8.80	$0.00	$50.44
	08/01/2014	$32.23	$9.91	$8.80	$0.00	$50.94
	12/01/2014	$32.23	$9.91	$9.33	$0.00	$51.47
	06/01/2015	$32.58	$9.91	$9.33	$0.00	$51.82
	08/01/2015	$32.58	$10.41	$9.33	$0.00	$52.32
	12/01/2015	$32.58	$10.41	$10.08	$0.00	$53.07
	06/01/2016	$33.08	$10.41	$10.08	$0.00	$53.57
	08/01/2016	$33.08	$10.91	$10.08	$0.00	$54.07
	12/01/2016	$33.08	$10.91	$10.89	$0.00	$54.88
PIER AND DOCK CONSTRUCTOR (UNDERPINNING AND DECK) *PILE DRIVER LOCAL 56 (ZONE 1)*	08/01/2013	$40.10	$9.80	$18.17	$0.00	$68.07
	08/01/2014	$41.60	$9.80	$18.17	$0.00	$69.57
	08/01/2015	$43.10	$9.80	$18.17	$0.00	$71.07
PILE DRIVER *PILE DRIVER LOCAL 56 (ZONE 1)*	08/01/2013	$40.10	$9.80	$18.17	$0.00	$68.07
	08/01/2014	$41.60	$9.80	$18.17	$0.00	$69.57
	08/01/2015	$43.10	$9.80	$18.17	$0.00	$71.07

Classification	Effective Date	Base Wage	Health	Pension	Supplemental Unemployment	Total Rate

Apprentice - *PILE DRIVER - Local 56 Zone 1*

Effective Date - 08/01/2013

Step	percent	Apprentice Base Wage	Health	Pension	Supplemental Unemployment	Total Rate
1	50	$20.05	$9.80	$18.17	$0.00	$48.02
2	60	$24.06	$9.80	$18.17	$0.00	$52.03
3	70	$28.07	$9.80	$18.17	$0.00	$56.04
4	75	$30.08	$9.80	$18.17	$0.00	$58.05
5	80	$32.08	$9.80	$18.17	$0.00	$60.05
6	80	$32.08	$9.80	$18.17	$0.00	$60.05
7	90	$36.09	$9.80	$18.17	$0.00	$64.06
8	90	$36.09	$9.80	$18.17	$0.00	$64.06

Effective Date - 08/01/2014

Step	percent	Apprentice Base Wage	Health	Pension	Supplemental Unemployment	Total Rate
1	50	$20.80	$9.80	$18.17	$0.00	$48.77
2	60	$24.96	$9.80	$18.17	$0.00	$52.93
3	70	$29.12	$9.80	$18.17	$0.00	$57.09
4	75	$31.20	$9.80	$18.17	$0.00	$59.17
5	80	$33.28	$9.80	$18.17	$0.00	$61.25
6	80	$33.28	$9.80	$18.17	$0.00	$61.25
7	90	$37.44	$9.80	$18.17	$0.00	$65.41
8	90	$37.44	$9.80	$18.17	$0.00	$65.41

Notes:

Apprentice to Journeyworker Ratio:1:3

PIPEFITTER & STEAMFITTER *PIPEFITTERS LOCAL 537*	03/01/2013	$49.34	$8.75	$14.39	$0.00	$72.48

Apprentice - *PIPEFITTER - Local 537*

Effective Date - 03/01/2013

Step	percent	Apprentice Base Wage	Health	Pension	Supplemental Unemployment	Total Rate
1	40	$19.74	$8.75	$6.50	$0.00	$34.99
2	45	$22.20	$8.75	$14.39	$0.00	$45.34
3	60	$29.60	$8.75	$14.39	$0.00	$52.74
4	70	$34.54	$8.75	$14.39	$0.00	$57.68
5	80	$39.47	$8.75	$14.39	$0.00	$62.61

Notes:

** 1:3; 3:15; 1:10 thereafter / Steps are 1 yr.
Refrig/AC Mechanic **1:1;1:2;2:4;3:6;4:8;5:10;6:12;7:14;8:17;9:20;10:23(Max)

Apprentice to Journeyworker Ratio:**

Classification	Effective Date	Base Wage	Health	Pension	Supplemental Unemployment	Total Rate
PIPELAYER *LABORERS - ZONE 1*	12/01/2013	$33.60	$7.30	$12.70	$0.00	$53.60
	06/01/2014	$34.35	$7.30	$12.70	$0.00	$54.35
	12/01/2014	$35.10	$7.30	$12.70	$0.00	$55.10
	06/01/2015	$35.85	$7.30	$12.70	$0.00	$55.85
	12/01/2015	$36.60	$7.30	$12.70	$0.00	$56.60
	06/01/2016	$37.35	$7.30	$12.70	$0.00	$57.35
	12/01/2016	$38.35	$7.30	$12.70	$0.00	$58.35
For apprentice rates see "Apprentice- LABORER"						
PLUMBERS & GASFITTERS *PLUMBERS & GASFITTERS LOCAL 12*	03/01/2014	$49.41	$9.82	$14.29	$0.00	$73.52
	09/01/2014	$50.41	$9.82	$14.29	$0.00	$74.52
	03/01/2015	$51.41	$9.82	$14.29	$0.00	$75.52
	09/01/2015	$52.41	$9.82	$14.29	$0.00	$76.52
	03/01/2016	$53.56	$9.82	$14.29	$0.00	$77.67
	09/01/2016	$54.61	$9.82	$14.29	$0.00	$78.72
	03/01/2017	$55.61	$9.82	$14.29	$0.00	$79.72

Apprentice - *PLUMBER/GASFITTER - Local 12*

Effective Date - 03/01/2014

Step	percent	Apprentice Base Wage	Health	Pension	Supplemental Unemployment	Total Rate
1	35	$17.29	$9.82	$5.33	$0.00	$32.44
2	40	$19.76	$9.82	$6.02	$0.00	$35.60
3	55	$27.18	$9.82	$8.08	$0.00	$45.08
4	65	$32.12	$9.82	$9.47	$0.00	$51.41
5	75	$37.06	$9.82	$10.85	$0.00	$57.73

Effective Date - 09/01/2014

Step	percent	Apprentice Base Wage	Health	Pension	Supplemental Unemployment	Total Rate
1	35	$17.64	$9.82	$5.33	$0.00	$32.79
2	40	$20.16	$9.82	$6.02	$0.00	$36.00
3	55	$27.73	$9.82	$8.08	$0.00	$45.63
4	65	$32.77	$9.82	$9.47	$0.00	$52.06
5	75	$37.81	$9.82	$10.85	$0.00	$58.48

Notes:

** 1:2; 2:6; 3:10; 4:14; 5:19/Steps are 1 yr
Step4 with lic$54.58 Step5 with lic$60.90

Apprentice to Journeyworker Ratio:**

PNEUMATIC CONTROLS (TEMP.) *PIPEFITTERS LOCAL 537*	03/01/2013	$49.34	$8.75	$14.39	$0.00	$72.48

For apprentice rates see "Apprentice- PIPEFITTER" or "PLUMBER/PIPEFITTER"

Classification	Effective Date	Base Wage	Health	Pension	Supplemental Unemployment	Total Rate
PNEUMATIC DRILL/TOOL OPERATOR *LABORERS - ZONE 1*	12/01/2013	$33.60	$7.30	$12.70	$0.00	$53.60
	06/01/2014	$34.35	$7.30	$12.70	$0.00	$54.35
	12/01/2014	$35.10	$7.30	$12.70	$0.00	$55.10
	06/01/2015	$35.85	$7.30	$12.70	$0.00	$55.85
	12/01/2015	$36.60	$7.30	$12.70	$0.00	$56.60
	06/01/2016	$37.35	$7.30	$12.70	$0.00	$57.35
	12/01/2016	$38.35	$7.30	$12.70	$0.00	$58.35
For apprentice rates see "Apprentice- LABORER"						
POWDERMAN & BLASTER *LABORERS - ZONE 1*	12/01/2013	$34.35	$7.30	$12.70	$0.00	$54.35
	06/01/2014	$35.10	$7.30	$12.70	$0.00	$55.10
	12/01/2014	$35.85	$7.30	$12.70	$0.00	$55.85
	06/01/2015	$36.60	$7.30	$12.70	$0.00	$56.60
	12/01/2015	$37.35	$7.30	$12.70	$0.00	$57.35
	06/01/2016	$38.10	$7.30	$12.70	$0.00	$58.10
	12/01/2016	$39.10	$7.30	$12.70	$0.00	$59.10
For apprentice rates see "Apprentice- LABORER"						
POWER SHOVEL/DERRICK/TRENCHING MACHINE *OPERATING ENGINEERS LOCAL 4*	12/01/2013	$40.49	$10.00	$14.18	$0.00	$64.67
For apprentice rates see "Apprentice- OPERATING ENGINEERS"						
PUMP OPERATOR (CONCRETE) *OPERATING ENGINEERS LOCAL 4*	12/01/2013	$40.49	$10.00	$14.18	$0.00	$64.67
For apprentice rates see "Apprentice- OPERATING ENGINEERS"						
PUMP OPERATOR (DEWATERING, OTHER) *OPERATING ENGINEERS LOCAL 4*	12/01/2013	$28.11	$10.00	$14.18	$0.00	$52.29
For apprentice rates see "Apprentice- OPERATING ENGINEERS"						
READY-MIX CONCRETE DRIVER *TEAMSTERS LOCAL 25b*	05/01/2011	$28.03	$7.75	$5.91	$0.00	$41.69
RECLAIMERS *OPERATING ENGINEERS LOCAL 4*	12/01/2013	$40.11	$10.00	$14.18	$0.00	$64.29
For apprentice rates see "Apprentice- OPERATING ENGINEERS"						
RESIDENTIAL WOOD FRAME (All Other Work) *CARPENTERS -ZONE 2 (Residential Wood)*	04/01/2011	$24.24	$8.67	$15.51	$0.00	$48.42
RESIDENTIAL WOOD FRAME CARPENTER ** ** The Residential Wood Frame Carpenter classification applies only to the construction of new, wood frame residences that do not exceed four stories including the basement.*CARPENTERS -ZONE 2 (Residential Wood)*	05/01/2011	$24.24	$6.34	$6.23	$0.00	$36.81

As of 9/1/09 Carpentry work on wood-frame residential WEATHERIZATION projects shall be paid the RESIDENTIAL WOOD FRAME CARPENTER rate.

Classification	Effective Date	Base Wage	Health	Pension	Supplemental Unemployment	Total Rate

Apprentice - *CARPENTER (Residential Wood Frame) - Zone 2*

Effective Date - 05/01/2011

Step	percent	Apprentice Base Wage	Health	Pension	Supplemental Unemployment	Total Rate
1	60	$14.54	$6.34	$0.00	$0.00	$20.88
2	60	$14.54	$6.34	$6.23	$0.00	$27.11
3	65	$15.76	$6.34	$6.23	$0.00	$28.33
4	70	$16.97	$6.34	$6.23	$0.00	$29.54
5	75	$18.18	$6.34	$6.23	$0.00	$30.75
6	80	$19.39	$6.34	$6.23	$0.00	$31.96
7	85	$20.60	$6.34	$6.23	$0.00	$33.17
8	90	$21.82	$6.34	$6.23	$0.00	$34.39

Notes:

Apprentice to Journeyworker Ratio:1:5

RIDE-ON MOTORIZED BUGGY OPERATOR *LABORERS - ZONE 1*	12/01/2013	$33.60	$7.30	$12.70	$0.00	$53.60
	06/01/2014	$34.35	$7.30	$12.70	$0.00	$54.35
	12/01/2014	$35.10	$7.30	$12.70	$0.00	$55.10
	06/01/2015	$35.85	$7.30	$12.70	$0.00	$55.85
	12/01/2015	$36.60	$7.30	$12.70	$0.00	$56.60
	06/01/2016	$37.35	$7.30	$12.70	$0.00	$57.35
	12/01/2016	$38.35	$7.30	$12.70	$0.00	$58.35
For apprentice rates see "Apprentice- LABORER"						
ROLLER/SPREADER/MULCHING MACHINE *OPERATING ENGINEERS LOCAL 4*	12/01/2013	$40.11	$10.00	$14.18	$0.00	$64.29
For apprentice rates see "Apprentice- OPERATING ENGINEERS"						
ROOFER (Inc.Roofer Waterproofng &Roofer Damproofg) *ROOFERS LOCAL 33*	02/01/2014	$39.21	$10.50	$10.70	$0.00	$60.41
	08/01/2014	$40.11	$10.50	$10.70	$0.00	$61.31
	02/01/2015	$41.01	$10.50	$10.70	$0.00	$62.21
	08/01/2015	$41.91	$10.50	$10.70	$0.00	$63.11
	02/01/2016	$42.81	$10.50	$10.70	$0.00	$64.01

Classification	Effective Date	Base Wage	Health	Pension	Supplemental Unemployment	Total Rate

Apprentice - *ROOFER - Local 33*

Effective Date - 02/01/2014

Step	percent	Apprentice Base Wage	Health	Pension	Supplemental Unemployment	Total Rate
1	50	$19.61	$10.50	$3.38	$0.00	$33.49
2	60	$23.53	$10.50	$10.70	$0.00	$44.73
3	65	$25.49	$10.50	$10.70	$0.00	$46.69
4	75	$29.41	$10.50	$10.70	$0.00	$50.61
5	85	$33.33	$10.50	$10.70	$0.00	$54.53

Effective Date - 08/01/2014

Step	percent	Apprentice Base Wage	Health	Pension	Supplemental Unemployment	Total Rate
1	50	$20.06	$10.50	$3.38	$0.00	$33.94
2	60	$24.07	$10.50	$10.70	$0.00	$45.27
3	65	$26.07	$10.50	$10.70	$0.00	$47.27
4	75	$30.08	$10.50	$10.70	$0.00	$51.28
5	85	$34.09	$10.50	$10.70	$0.00	$55.29

Notes: ** 1:5, 2:6-10, the 1:10; Reroofing: 1:4, then 1:1
Step 1 is 2000 hrs.; Steps 2-5 are 1000 hrs.

Apprentice to Journeyworker Ratio:**

ROOFER SLATE / TILE / PRECAST CONCRETE *ROOFERS LOCAL 33*	02/01/2014	$39.46	$10.50	$10.70	$0.00	$60.66
	08/01/2014	$40.36	$10.50	$10.70	$0.00	$61.56
	02/01/2015	$41.26	$10.50	$10.70	$0.00	$62.46
	08/01/2015	$42.16	$10.50	$10.70	$0.00	$63.36
	02/01/2016	$43.06	$10.50	$10.70	$0.00	$64.26
For apprentice rates see "Apprentice- ROOFER"						
SHEETMETAL WORKER *SHEETMETAL WORKERS LOCAL 17 - A*	02/01/2014	$42.76	$9.82	$19.74	$2.17	$74.49
	08/01/2014	$43.61	$9.82	$19.74	$2.17	$75.34
	02/01/2015	$44.51	$9.82	$19.74	$2.17	$76.24
	08/01/2015	$45.51	$9.82	$19.74	$2.17	$77.24
	02/01/2016	$46.51	$9.82	$19.74	$2.17	$78.24
	08/01/2016	$47.66	$9.82	$19.74	$2.17	$79.39
	02/01/2017	$48.76	$9.82	$19.74	$2.17	$80.49
	08/01/2017	$49.86	$9.82	$19.74	$2.17	$81.59
	02/01/2018	$51.01	$9.82	$19.74	$2.17	$82.74

Classification	Effective Date	Base Wage	Health	Pension	Supplemental Unemployment	Total Rate

Apprentice - *SHEET METAL WORKER - Local 17-A*

Effective Date - 02/01/2014

Step	percent	Apprentice Base Wage	Health	Pension	Supplemental Unemployment	Total Rate
1	40	$17.10	$9.82	$4.28	$0.00	$31.20
2	40	$17.10	$9.82	$4.28	$0.00	$31.20
3	45	$19.24	$9.82	$8.70	$1.13	$38.89
4	45	$19.24	$9.82	$8.70	$1.13	$38.89
5	50	$21.38	$9.82	$9.49	$1.22	$41.91
6	50	$21.38	$9.82	$9.74	$1.23	$42.17
7	60	$25.66	$9.82	$11.05	$1.40	$47.93
8	65	$27.79	$9.82	$11.84	$1.48	$50.93
9	75	$32.07	$9.82	$13.41	$1.66	$56.96
10	85	$36.35	$9.82	$14.48	$1.82	$62.47

Effective Date - 08/01/2014

Step	percent	Apprentice Base Wage	Health	Pension	Supplemental Unemployment	Total Rate
1	40	$17.44	$9.82	$4.28	$0.00	$31.54
2	40	$17.44	$9.82	$4.28	$0.00	$31.54
3	45	$19.62	$9.82	$8.70	$1.13	$39.27
4	45	$19.62	$9.82	$8.70	$1.13	$39.27
5	50	$21.81	$9.82	$9.49	$1.22	$42.34
6	50	$21.81	$9.82	$9.74	$1.23	$42.60
7	60	$26.17	$9.82	$11.05	$1.40	$48.44
8	65	$28.35	$9.82	$11.84	$1.48	$51.49
9	75	$32.71	$9.82	$13.41	$1.66	$57.60
10	85	$37.07	$9.82	$14.48	$1.82	$63.19

Notes:

Steps are 6 mos.

Apprentice to Journeyworker Ratio:1:4

SIGN ERECTOR *PAINTERS LOCAL 35 - ZONE 2*	06/01/2013	$25.81	$7.07	$7.05	$0.00	$39.93

Classification	Effective Date	Base Wage	Health	Pension	Supplemental Unemployment	Total Rate

Apprentice - *SIGN ERECTOR - Local 35 Zone 2*

Effective Date - 06/01/2013

Step	percent	Apprentice Base Wage	Health	Pension	Supplemental Unemployment	Total Rate
1	50	$12.91	$7.07	$0.00	$0.00	$19.98
2	55	$14.20	$7.07	$2.45	$0.00	$23.72
3	60	$15.49	$7.07	$2.45	$0.00	$25.01
4	65	$16.78	$7.07	$2.45	$0.00	$26.30
5	70	$18.07	$7.07	$7.05	$0.00	$32.19
6	75	$19.36	$7.07	$7.05	$0.00	$33.48
7	80	$20.65	$7.07	$7.05	$0.00	$34.77
8	85	$21.94	$7.07	$7.05	$0.00	$36.06
9	90	$23.23	$7.07	$7.05	$0.00	$37.35

Notes:

Steps are 4 mos.

Apprentice to Journeyworker Ratio:1:1

SPECIALIZED EARTH MOVING EQUIP < 35 TONS *TEAMSTERS JOINT COUNCIL NO. 10 ZONE A*	12/01/2013	$32.34	$9.41	$8.80	$0.00	$50.55
	06/01/2014	$32.69	$9.41	$8.80	$0.00	$50.90
	08/01/2014	$32.69	$9.91	$8.80	$0.00	$51.40
	12/01/2014	$32.69	$9.91	$9.33	$0.00	$51.93
	06/01/2015	$33.04	$9.91	$9.33	$0.00	$52.28
	08/01/2015	$33.04	$10.41	$9.33	$0.00	$52.78
	12/01/2015	$33.04	$10.41	$10.08	$0.00	$53.53
	06/01/2016	$33.54	$10.41	$10.08	$0.00	$54.03
	08/01/2016	$33.54	$10.91	$10.08	$0.00	$54.53
	12/01/2016	$33.54	$10.91	$10.89	$0.00	$55.34
SPECIALIZED EARTH MOVING EQUIP > 35 TONS *TEAMSTERS JOINT COUNCIL NO. 10 ZONE A*	12/01/2013	$32.63	$9.41	$8.80	$0.00	$50.84
	06/01/2014	$32.98	$9.41	$8.80	$0.00	$51.19
	08/01/2014	$32.98	$9.91	$8.80	$0.00	$51.69
	12/01/2014	$32.98	$9.91	$9.33	$0.00	$52.22
	06/01/2015	$33.33	$9.91	$9.33	$0.00	$52.57
	08/01/2015	$33.33	$10.41	$9.33	$0.00	$53.07
	12/01/2015	$33.33	$10.41	$10.08	$0.00	$53.82
	06/01/2016	$33.83	$10.41	$10.08	$0.00	$54.32
	08/01/2016	$33.83	$10.91	$10.08	$0.00	$54.82
	12/01/2016	$33.83	$10.91	$10.89	$0.00	$55.63

Classification	Effective Date	Base Wage	Health	Pension	Supplemental Unemployment	Total Rate
SPRINKLER FITTER *SPRINKLER FITTERS LOCAL 550 - (Section A) Zone 1*	03/01/2014	$53.58	$8.42	$13.60	$0.00	$75.60
	10/01/2014	$54.73	$8.42	$13.60	$0.00	$76.75
	01/01/2015	$54.73	$8.42	$13.75	$0.00	$76.90
	03/01/2015	$55.73	$8.42	$13.75	$0.00	$77.90
	10/01/2015	$56.88	$8.42	$13.75	$0.00	$79.05
	01/01/2016	$56.88	$8.67	$13.90	$0.00	$79.45
	03/01/2016	$57.88	$8.67	$13.90	$0.00	$80.45
	10/01/2016	$59.03	$8.67	$13.90	$0.00	$81.60
	03/01/2017	$60.03	$8.67	$13.90	$0.00	$82.60

Apprentice - *SPRINKLER FITTER - Local 550 (Section A) Zone 1*

Effective Date - 03/01/2014

Step	percent	Apprentice Base Wage	Health	Pension	Supplemental Unemployment	Total Rate
1	35	$18.75	$8.42	$8.25	$0.00	$35.42
2	40	$21.43	$8.42	$8.25	$0.00	$38.10
3	45	$24.11	$8.42	$8.25	$0.00	$40.78
4	50	$26.79	$8.42	$8.25	$0.00	$43.46
5	55	$29.47	$8.42	$8.25	$0.00	$46.14
6	60	$32.15	$8.42	$8.25	$0.00	$48.82
7	65	$34.83	$8.42	$8.25	$0.00	$51.50
8	70	$37.51	$8.42	$8.25	$0.00	$54.18
9	75	$40.19	$8.42	$8.25	$0.00	$56.86
10	80	$42.86	$8.42	$8.25	$0.00	$59.53

Effective Date - 10/01/2014

Step	percent	Apprentice Base Wage	Health	Pension	Supplemental Unemployment	Total Rate
1	35	$19.16	$8.42	$8.25	$0.00	$35.83
2	40	$21.89	$8.42	$8.25	$0.00	$38.56
3	45	$24.63	$8.42	$8.25	$0.00	$41.30
4	50	$27.37	$8.42	$8.25	$0.00	$44.04
5	55	$30.10	$8.42	$8.25	$0.00	$46.77
6	60	$32.84	$8.42	$8.25	$0.00	$49.51
7	65	$35.57	$8.42	$8.25	$0.00	$52.24
8	70	$38.31	$8.42	$8.25	$0.00	$54.98
9	75	$41.05	$8.42	$8.25	$0.00	$57.72
10	80	$43.78	$8.42	$8.25	$0.00	$60.45

Notes: Apprentice entered prior 9/30/10:
40/45/50/55/60/65/70/75/80/85
Steps are 850 hours

Apprentice to Journeyworker Ratio:1:3

STEAM BOILER OPERATOR *OPERATING ENGINEERS LOCAL 4*	12/01/2013	$40.11	$10.00	$14.18	$0.00	$64.29

For apprentice rates see "Apprentice- OPERATING ENGINEERS"

TAMPERS, SELF-PROPELLED OR TRACTOR DRAWN *OPERATING ENGINEERS LOCAL 4*	12/01/2013	$40.11	$10.00	$14.18	$0.00	$64.29

Classification	Effective Date	Base Wage	Health	Pension	Supplemental Unemployment	Total Rate
For apprentice rates see "Apprentice- OPERATING ENGINEERS"						
TELECOMMUNICATION TECHNICIAN *ELECTRICIANS LOCAL 103*	03/01/2014	$33.44	$13.00	$13.03	$0.00	$59.47
	09/01/2014	$33.84	$13.00	$13.05	$0.00	$59.89
	03/01/2015	$34.38	$13.00	$13.06	$0.00	$60.44
	09/01/2015	$35.10	$13.00	$13.08	$0.00	$61.18
	03/01/2016	$35.81	$13.00	$13.10	$0.00	$61.91

Apprentice - *TELECOMMUNICATION TECHNICIAN - Local 103*

Effective Date - 03/01/2014

Step	percent	Apprentice Base Wage	Health	Pension	Supplemental Unemployment	Total Rate
1	40	$13.38	$13.00	$0.40	$0.00	$26.78
2	40	$13.38	$13.00	$0.40	$0.00	$26.78
3	45	$15.05	$13.00	$10.29	$0.00	$38.34
4	45	$15.05	$13.00	$10.29	$0.00	$38.34
5	50	$16.72	$13.00	$10.54	$0.00	$40.26
6	55	$18.39	$13.00	$10.79	$0.00	$42.18
7	60	$20.06	$13.00	$11.04	$0.00	$44.10
8	65	$21.74	$13.00	$11.29	$0.00	$46.03
9	70	$23.41	$13.00	$11.54	$0.00	$47.95
10	75	$25.08	$13.00	$11.79	$0.00	$49.87

Effective Date - 09/01/2014

Step	percent	Apprentice Base Wage	Health	Pension	Supplemental Unemployment	Total Rate
1	40	$13.54	$13.00	$0.41	$0.00	$26.95
2	40	$13.54	$13.00	$0.41	$0.00	$26.95
3	45	$15.23	$13.00	$10.30	$0.00	$38.53
4	45	$15.23	$13.00	$10.30	$0.00	$38.53
5	50	$16.92	$13.00	$10.55	$0.00	$40.47
6	55	$18.61	$13.00	$10.80	$0.00	$42.41
7	60	$20.30	$13.00	$11.05	$0.00	$44.35
8	65	$22.00	$13.00	$11.30	$0.00	$46.30
9	70	$23.69	$13.00	$11.55	$0.00	$48.24
10	75	$25.38	$13.00	$11.80	$0.00	$50.18

Notes:

Apprentice to Journeyworker Ratio:1:1

TERRAZZO FINISHERS *BRICKLAYERS LOCAL 3 - MARBLE & TILE*	02/01/2014	$47.00	$10.18	$18.15	$0.00	$75.33
	08/01/2014	$47.90	$10.18	$18.22	$0.00	$76.30
	02/01/2015	$48.46	$10.18	$18.22	$0.00	$76.86
	08/01/2015	$49.36	$10.18	$18.29	$0.00	$77.83
	02/01/2016	$49.93	$10.18	$18.29	$0.00	$78.40
	08/01/2016	$50.83	$10.18	$18.37	$0.00	$79.38
	02/01/2017	$51.40	$10.18	$18.37	$0.00	$79.95

Classification	Effective Date	Base Wage	Health	Pension	Supplemental Unemployment	Total Rate

Apprentice - *TERRAZZO FINISHER - Local 3 Marble & Tile*

Effective Date - 02/01/2014

Step	percent	Apprentice Base Wage	Health	Pension	Supplemental Unemployment	Total Rate
1	50	$23.50	$10.18	$18.15	$0.00	$51.83
2	60	$28.20	$10.18	$18.15	$0.00	$56.53
3	70	$32.90	$10.18	$18.15	$0.00	$61.23
4	80	$37.60	$10.18	$18.15	$0.00	$65.93
5	90	$42.30	$10.18	$18.15	$0.00	$70.63

Effective Date - 08/01/2014

Step	percent	Apprentice Base Wage	Health	Pension	Supplemental Unemployment	Total Rate
1	50	$23.95	$10.18	$18.22	$0.00	$52.35
2	60	$28.74	$10.18	$18.22	$0.00	$57.14
3	70	$33.53	$10.18	$18.22	$0.00	$61.93
4	80	$38.32	$10.18	$18.22	$0.00	$66.72
5	90	$43.11	$10.18	$18.22	$0.00	$71.51

Notes:

Apprentice to Journeyworker Ratio:1:3

TEST BORING DRILLER *LABORERS - FOUNDATION AND MARINE*	12/01/2013	$34.70	$7.30	$12.90	$0.00	$54.90
	06/01/2014	$35.45	$7.30	$12.90	$0.00	$55.65
	12/01/2014	$36.20	$7.30	$12.90	$0.00	$56.40
	06/01/2015	$36.95	$7.30	$12.90	$0.00	$57.15
	12/01/2015	$37.70	$7.30	$12.90	$0.00	$57.90
	06/01/2016	$38.45	$7.30	$12.90	$0.00	$58.65
	12/01/2016	$39.45	$7.30	$12.90	$0.00	$59.65
For apprentice rates see "Apprentice- LABORER"						
TEST BORING DRILLER HELPER *LABORERS - FOUNDATION AND MARINE*	12/01/2013	$33.42	$7.30	$12.90	$0.00	$53.62
	06/01/2014	$34.17	$7.30	$12.90	$0.00	$54.37
	12/01/2014	$34.92	$7.30	$12.90	$0.00	$55.12
	06/01/2015	$35.67	$7.30	$12.90	$0.00	$55.87
	12/01/2015	$36.42	$7.30	$12.90	$0.00	$56.62
	06/01/2016	$37.17	$7.30	$12.90	$0.00	$57.37
	12/01/2016	$38.17	$7.30	$12.90	$0.00	$58.37
For apprentice rates see "Apprentice- LABORER"						
TEST BORING LABORER *LABORERS - FOUNDATION AND MARINE*	12/01/2013	$33.30	$7.30	$12.90	$0.00	$53.50
	06/01/2014	$34.05	$7.30	$12.90	$0.00	$54.25
	12/01/2014	$34.80	$7.30	$12.90	$0.00	$55.00
	06/01/2015	$35.55	$7.30	$12.90	$0.00	$55.75
	12/01/2015	$36.30	$7.30	$12.90	$0.00	$56.50
	06/01/2016	$37.05	$7.30	$12.90	$0.00	$57.25
	12/01/2016	$38.05	$7.30	$12.90	$0.00	$58.25
For apprentice rates see "Apprentice- LABORER"						

Classification	Effective Date	Base Wage	Health	Pension	Supplemental Unemployment	Total Rate
TRACTORS/PORTABLE STEAM GENERATORS *OPERATING ENGINEERS LOCAL 4*	12/01/2013	$40.11	$10.00	$14.18	$0.00	$64.29
For apprentice rates see "Apprentice- OPERATING ENGINEERS"						
TRAILERS FOR EARTH MOVING EQUIPMENT *TEAMSTERS JOINT COUNCIL NO. 10 ZONE A*	12/01/2013	$32.92	$9.41	$8.80	$0.00	$51.13
	06/01/2014	$33.27	$9.41	$8.80	$0.00	$51.48
	08/01/2014	$33.27	$9.91	$8.80	$0.00	$51.98
	12/01/2014	$33.27	$9.91	$9.33	$0.00	$52.51
	06/01/2015	$33.62	$9.91	$9.33	$0.00	$52.86
	08/01/2015	$33.62	$10.41	$9.33	$0.00	$53.36
	12/01/2015	$33.62	$10.41	$10.08	$0.00	$54.11
	06/01/2016	$34.12	$10.41	$10.08	$0.00	$54.61
	08/01/2016	$34.12	$10.91	$10.08	$0.00	$55.11
	12/01/2016	$34.12	$10.91	$10.89	$0.00	$55.92
TUNNEL WORK - COMPRESSED AIR *LABORERS (COMPRESSED AIR)*	12/01/2013	$45.58	$7.30	$13.30	$0.00	$66.18
	06/01/2014	$46.33	$7.30	$13.30	$0.00	$66.93
	12/01/2014	$47.08	$7.30	$13.30	$0.00	$67.68
	06/01/2015	$47.83	$7.30	$13.30	$0.00	$68.43
	12/01/2015	$48.58	$7.30	$13.30	$0.00	$69.18
	06/01/2016	$49.33	$7.30	$13.30	$0.00	$69.93
	12/01/2016	$50.33	$7.30	$13.30	$0.00	$70.93
For apprentice rates see "Apprentice- LABORER"						
TUNNEL WORK - COMPRESSED AIR (HAZ. WASTE) *LABORERS (COMPRESSED AIR)*	12/01/2013	$47.58	$7.30	$13.30	$0.00	$68.18
	06/01/2014	$48.33	$7.30	$13.30	$0.00	$68.93
	12/01/2014	$49.08	$7.30	$13.30	$0.00	$69.68
	06/01/2015	$49.83	$7.30	$13.30	$0.00	$70.43
	12/01/2015	$50.58	$7.30	$13.30	$0.00	$71.18
	06/01/2016	$51.33	$7.30	$13.30	$0.00	$71.93
	12/01/2016	$52.33	$7.30	$13.30	$0.00	$72.93
For apprentice rates see "Apprentice- LABORER"						
TUNNEL WORK - FREE AIR *LABORERS (FREE AIR TUNNEL)*	12/01/2013	$37.65	$7.30	$13.30	$0.00	$58.25
	06/01/2014	$38.40	$7.30	$13.30	$0.00	$59.00
	12/01/2014	$39.15	$7.30	$13.30	$0.00	$59.75
	06/01/2015	$39.90	$7.30	$13.30	$0.00	$60.50
	12/01/2015	$40.65	$7.30	$13.30	$0.00	$61.25
	06/01/2016	$41.40	$7.30	$13.30	$0.00	$62.00
	12/01/2016	$42.40	$7.30	$13.30	$0.00	$63.00
For apprentice rates see "Apprentice- LABORER"						
TUNNEL WORK - FREE AIR (HAZ. WASTE) *LABORERS (FREE AIR TUNNEL)*	12/01/2013	$39.65	$7.30	$13.30	$0.00	$60.25
	06/01/2014	$40.40	$7.30	$13.30	$0.00	$61.00
	12/01/2014	$41.15	$7.30	$13.30	$0.00	$61.75
	06/01/2015	$41.90	$7.30	$13.30	$0.00	$62.50
	12/01/2015	$42.65	$7.30	$13.30	$0.00	$63.25
	06/01/2016	$43.40	$7.30	$13.30	$0.00	$64.00
	12/01/2016	$44.40	$7.30	$13.30	$0.00	$65.00
For apprentice rates see "Apprentice- LABORER"						

Classification	Effective Date	Base Wage	Health	Pension	Supplemental Unemployment	Total Rate
VAC-HAUL *TEAMSTERS JOINT COUNCIL NO. 10 ZONE A*	12/01/2013	$32.34	$9.41	$8.80	$0.00	$50.55
	06/01/2014	$32.69	$9.41	$8.80	$0.00	$50.90
	08/01/2014	$32.69	$9.91	$8.80	$0.00	$51.40
	12/01/2014	$32.69	$9.91	$9.33	$0.00	$51.93
	06/01/2015	$33.04	$9.91	$9.33	$0.00	$52.28
	08/01/2015	$33.04	$10.41	$9.33	$0.00	$52.78
	12/01/2015	$33.04	$10.41	$10.08	$0.00	$53.53
	06/01/2016	$33.54	$10.41	$10.08	$0.00	$54.03
	08/01/2016	$33.54	$10.91	$10.08	$0.00	$54.53
	12/01/2016	$33.54	$10.91	$10.89	$0.00	$55.34
WAGON DRILL OPERATOR *LABORERS - ZONE 1*	12/01/2013	$33.60	$7.30	$12.70	$0.00	$53.60
	06/01/2014	$34.35	$7.30	$12.70	$0.00	$54.35
	12/01/2014	$35.10	$7.30	$12.70	$0.00	$55.10
	06/01/2015	$35.85	$7.30	$12.70	$0.00	$55.85
	12/01/2015	$36.60	$7.30	$12.70	$0.00	$56.60
	06/01/2016	$37.35	$7.30	$12.70	$0.00	$57.35
	12/01/2016	$38.35	$7.30	$12.70	$0.00	$58.35
For apprentice rates see "Apprentice- LABORER"						
WASTE WATER PUMP OPERATOR *OPERATING ENGINEERS LOCAL 4*	12/01/2013	$40.49	$10.00	$14.18	$0.00	$64.67
For apprentice rates see "Apprentice- OPERATING ENGINEERS"						
WATER METER INSTALLER *PLUMBERS & GASFITTERS LOCAL 12*	03/01/2014	$49.41	$9.82	$14.29	$0.00	$73.52
	09/01/2014	$50.41	$9.82	$14.29	$0.00	$74.52
	03/01/2015	$51.41	$9.82	$14.29	$0.00	$75.52
	09/01/2015	$52.41	$9.82	$14.29	$0.00	$76.52
	03/01/2016	$53.56	$9.82	$14.29	$0.00	$77.67
	09/01/2016	$54.61	$9.82	$14.29	$0.00	$78.72
	03/01/2017	$55.61	$9.82	$14.29	$0.00	$79.72
For apprentice rates see "Apprentice- PLUMBER/PIPEFITTER" or "PLUMBER/GASFITTER"						
Outside Electrical - East						
CABLE TECHNICIAN (Power Zone) *OUTSIDE ELECTRICAL WORKERS - EAST LOCAL 104*	09/01/2013	$25.66	$8.70	$4.48	$0.00	$38.84
For apprentice rates see "Apprentice- LINEMAN"						
CABLEMAN (Underground Ducts & Cables) *OUTSIDE ELECTRICAL WORKERS - EAST LOCAL 104*	09/01/2013	$36.55	$8.70	$6.58	$0.00	$51.83
For apprentice rates see "Apprentice- LINEMAN"						
DRIVER / GROUNDMAN CDL *OUTSIDE ELECTRICAL WORKERS - EAST LOCAL 104*	09/01/2013	$29.94	$8.70	$6.05	$0.00	$44.69
For apprentice rates see "Apprentice- LINEMAN"						
DRIVER / GROUNDMAN -Inexperienced (<2000 Hrs) *OUTSIDE ELECTRICAL WORKERS - EAST LOCAL 104*	09/01/2013	$23.52	$8.70	$5.24	$0.00	$37.46
For apprentice rates see "Apprentice- LINEMAN"						
EQUIPMENT OPERATOR (Class A CDL) *OUTSIDE ELECTRICAL WORKERS - EAST LOCAL 104*	09/01/2013	$36.35	$8.70	$9.43	$0.00	$54.48
For apprentice rates see "Apprentice- LINEMAN"						
EQUIPMENT OPERATOR (Class B CDL) *OUTSIDE ELECTRICAL WORKERS - EAST LOCAL 104*	09/01/2013	$32.08	$8.70	$6.59	$0.00	$47.37
For apprentice rates see "Apprentice- LINEMAN"						

Classification	Effective Date	Base Wage	Health	Pension	Supplemental Unemployment	Total Rate
GROUNDMAN *OUTSIDE ELECTRICAL WORKERS - EAST LOCAL 104* For apprentice rates see "Apprentice- LINEMAN"	09/01/2013	$23.52	$8.70	$3.72	$0.00	$35.94
GROUNDMAN -Inexperienced (<2000 Hrs.) *OUTSIDE ELECTRICAL WORKERS - EAST LOCAL 104* For apprentice rates see "Apprentice- LINEMAN"	09/01/2013	$19.25	$8.70	$2.85	$0.00	$30.80
JOURNEYMAN LINEMAN *OUTSIDE ELECTRICAL WORKERS - EAST LOCAL 104*	09/01/2013	$42.77	$8.70	$11.78	$0.00	$63.25

Apprentice - *LINEMAN (Outside Electrical) - East Local 104*

Effective Date - 09/01/2013

Step	percent	Apprentice Base Wage	Health	Pension	Supplemental Unemployment	Total Rate
1	60	$25.66	$8.70	$4.24	$0.00	$38.60
2	65	$27.80	$8.70	$4.71	$0.00	$41.21
3	70	$29.94	$8.70	$5.43	$0.00	$44.07
4	75	$32.08	$8.70	$6.16	$0.00	$46.94
5	80	$34.22	$8.70	$6.88	$0.00	$49.80
6	85	$36.35	$8.70	$7.62	$0.00	$52.67
7	90	$38.49	$8.70	$8.83	$0.00	$56.02

Notes:

Apprentice to Journeyworker Ratio:1:2

TELEDATA CABLE SPLICER *OUTSIDE ELECTRICAL WORKERS - EAST LOCAL 104*	07/16/2012	$26.33	$4.18	$2.79	$0.00	$33.30
TELEDATA LINEMAN/EQUIPMENT OPERATOR *OUTSIDE ELECTRICAL WORKERS - EAST LOCAL 104*	07/16/2012	$24.78	$4.18	$2.74	$0.00	$31.70
TELEDATA WIREMAN/INSTALLER/TECHNICIAN *OUTSIDE ELECTRICAL WORKERS - EAST LOCAL 104*	07/16/2012	$24.78	$4.18	$2.74	$0.00	$31.70
TREE TRIMMER *OUTSIDE ELECTRICAL WORKERS - EAST LOCAL 104*	01/29/2012	$17.18	$3.37	$0.00	$0.00	$20.55

This classification applies only to tree work done: (a) for a utility company, R.E.A. cooperative, or railroad or coal mining company, and (b) for the purpose of operating, maintaining, or repairing the utility company's equipment, and (c) by a person who is using hand or mechanical cutting methods and is not on the ground. This classification does not apply to wholesale tree removal.

TREE TRIMMER GROUNDMAN *OUTSIDE ELECTRICAL WORKERS - EAST LOCAL 104*	01/29/2012	$15.15	$3.37	$0.00	$0.00	$18.52

This classification applies only to tree work done: (a) for a utility company, R.E.A. cooperative, or railroad or coal mining company, and (b) for the purpose of operating, maintaining, or repairing the utility company's equipment, and (c) by a person who is using hand or mechanical cutting methods and is on the ground. This classification does not apply to wholesale tree removal.

Classification	Effective Date	Base Wage	Health	Pension	Supplemental Unemployment	Total Rate

Additional Apprentice Information:

Minimum wage rates for apprentices employed on public works projects are listed above as a percentage of the pre-determined hourly wage rate established by the Commissioner under the provisions of the M.G.L. c. 149, ss. 26-27D. Apprentice ratios are established by the Division of Apprenticeship Training pursuant to M.G.L. c. 23, ss. 11E-11L.

All apprentices must be registered with the Division of Apprenticeship Training in accordance with M.G.L. c. 23, ss. 11E-11L.

All steps are six months (1000 hours) unless otherwise specified.

* Ratios are expressed in allowable number of apprentices to journeymen or fraction thereof.
** Multiple ratios are listed in the comment field.
*** APP to JM; 1:1, 2:2, 2:3, 3:4, 4:4, 4:5, 4:6, 5:7, 6:7, 6:8, 6:9, 7:10, 8:10, 8:11, 8:12, 9:13, 10:13, 10:14, etc.
**** APP to JM; 1:1, 1:2, 2:3, 2:4, 3:5, 4:6, 4:7, 5:8, 6:9, 6:10, 7:11, 8:12, 8:13, 9:14, 10:15, 10:16, etc.

This page intentionally left blank

SECTION 00 73 73

STATUTORY REQUIREMENTS

GENERAL

A. The address system used herein is the same as the address system used in the Standard General and Supplementary Conditions, with the prefix "SC" added thereto. Additional terms used in this Section have the meanings stated below, which are applicable to both the singular and plural thereof.

B. The Project is specifically subject to the provisions of the Massachusetts General Laws ("MGL").

C. The contents of this Section do not represent or reflect all applicable Laws and Regulations and may only include excerpts and portions of certain Laws and Regulations. Other provisions required by statute shall be deemed to be so included and incorporated herein. Contractor is solely responsible to determine, obtain, review and interpret the full text of applicable Laws and Regulations.

SC-1.01.A.29 *Owner:* Add the following language at the beginning of the definition.

Also referred to as "*Awarding Authority*" or "*contracting authority*" which may be used interchangeably and shall have the same meaning.

SC-1.01.A.44 *Substantial Completion:* Add the following language at the end of the definition.

For the purposes of MGL Chapter 30, Section 39G, *Completion of public works; semi-final and final estimates; payments*; *extra work; disputed items*, Substantial Completion shall also mean either that the Work has been completed except for Work having a valued at less than 1 percent of the then adjusted total Contract Price, or substantially all of the Work has been completed and opened to public use except for minor incomplete or unsatisfactory Work items that do not materially impair the usefulness of the Work as required by the Contract.

SC-1.01.B *Additional Terms:* Add the following new definition.

7. *material or Material* -- As used in MGL Chapter 30, Section 39M Contracts for construction and materials; manner of awarding, regarding items equal to those specified, the word "material" shall mean and include any article, assembly, system, included in the Work, or any component part thereof.

SC-4.03 ***Differing Subsurface or Physical Conditions:*** Delete Paragraph 4.03.B in its entirety and insert the following in its place.

B. Pursuant to MGL Chapter 30, Section 39N *Construction contracts; equitable adjustment in contract price for differing subsurface or latent physical conditions*, if, during the progress of the Work, the Contractor or the Awarding Authority discovers that the actual subsurface or latent physical conditions encountered at the Site differ substantially or materially from those shown on the Plans or indicated in the Contract Documents either the Contractor or the contracting authority may request an equitable adjustment in the Contract Price of the Contract applying to Work affected by the differing Site conditions. A request for such an adjustment shall be in writing and shall be delivered by the party making such claim to the other party as soon as possible after such conditions are discovered. Upon receipt of such a claim from a Contractor, or upon its own initiative, the contracting authority shall make an investigation of such physical conditions, and, if they differ substantially or materially from those shown on the Plans or indicated in the Contract Documents or from those ordinarily encountered and generally recognized as inherent in work of the character provided for in the Plans and Contract Documents and are of such a nature as to cause an increase or decrease in the cost of performance of the Work or a change in the construction methods required for the performance of the Work which results in an increase or decrease in the cost of the Work, the contracting authority shall make an equitable adjustment in the Contract Price and the Contract shall be modified in writing accordingly.

SC-5.01 ***Performance, Payment, and Other Bonds:*** Add the following new paragraphs immediately after Paragraph 5.01.A.

3. Pursuant to MGL Chapter 30, Section 39A *Construction contracts for public ways, airports or public works; truck rentals; security for payment*; *and MGL Chapter 149, Section 29 Bonds for payment for labor, materials, rentals or transportation charges (et al)*; the required payment bond shall also cover payment by the Contractor and Subcontractors for the rental or hire of dump trucks and "the rental or hire of vehicles, steam shovels, rollers propelled by steam or other power, concrete mixers, tools and other appliances and equipment employed in such construction," and for payment of transportation charges directly related to such rental or hire. Such security for payment of transportation charges shall be incorporated by appropriate reference thereto as an additional obligation or condition in the required bonds.

4. In addition, such bonds shall cover payment by Contractor and Subcontractors of any sums due trustees or other persons authorized to collect such payments from the Contractor or Subcontractors, for health and welfare plans, supplementary unemployment benefit plans and other fringe benefits which are payable in cash and provided for in collective bargaining agreements between organized labor and the Contractor or Subcontractors;

SC-5.02 ***Licensed Sureties and Insurers:*** Add the following new paragraphs immediately after Paragraph 5.02.A.

1. Pursuant to *MGL Chapter 149, Section 29D Surety company; bonds*, every performance bond and every payment bond issued for any construction work in the Commonwealth shall be the bond of a surety company organized pursuant to Section 105 of MGL chapter 175 or of a surety company authorized to do business in the Commonwealth under the provisions of section 106 of said chapter 175 and be approved by the U.S. Department of Treasury and are acceptable as sureties and reinsurers on federal bonds under Title 31 of the United States Code, sections 9304 to 9308.

2. If there is more than one surety company, the surety companies shall be jointly and severally liable.

SC-5.04 ***Contractor's Insurance:*** Add the language at the end of Paragraph 5.04.A.1.

, pursuant to *MGL Chapter 149, Section 34A, Contracts for public works; workers' compensation insurance; breach of contract; enforcement and violation of statute;*

SC-6.02 ***Labor; Working Hours:***

Add the following new paragraphs immediately after Paragraph 6.02.A.1.

2. Pursuant to *MGL Chapter 30, Section 39S, Contracts for construction; requirements***,** Contractor shall furnish labor that can work in harmony with all other elements of labor employed or to be employed in the Work.

3. Pursuant to *MGL Chapter 149, Section 26 Public works; preference to veterans and citizens; wages*, preference shall be given to citizens of the Commonwealth of Massachusetts, service-disabled veterans, and citizens of the United States.

4. The Contractor shall not participate in or cooperate with an international boycott, as defined in Section 999 (b)(3) and (4) of the Internal Revenue Code 1986, as amended , or engage in conduct declared to be unlawful by MGL Chapter 151E, *Prohibition Of Certain Discrimination By Businesses,* Section 2.

5. Pursuant to *MGL Chapter 149, Section 6B License for business activities involving asbestos; fee*, any Work involving the removal, containment, or encapsulation of asbestos or material containing asbestos may only be performed by a licensed contractor.

Add the following new paragraph immediately after Paragraph 6.02.B.

1. *MGL Chapter 149, Section* 30 *Eight hour day and six day week; emergencies; work on highways*, and Section 34 *Public contracts; stipulation as to hours and days of work; void contracts*, apply to this Project which limits work hours of those employed on public construction to 8 hours in any one day or 48 hours in any one week or 6 days in any one week, except in cases of emergency.

SC-6.05 ***Substitutes and "Or-Equals":*** Add the following language at the end of Paragraph 6.05.A.

The provisions of *MGL Chapter 30, Section 39M, subsection (b)* also apply to this Paragraph.

SC-6.10 ***Taxes*****:** Add the following new paragraph immediately after Paragraph 6.10.A.

1. *MGL Chapter 64H, Section 6 Exemptions, subsection (f)* exempts from Massachusetts sales tax, building materials and supplies to be used in the Project, and Contractor shall not include any amount therefor. The words "building materials and supplies" shall include all materials and supplies consumed, employed or expended in the construction, reconstruction, alteration, remodeling or repair of any building, structure, public highway, bridge, or other such public work, as well as such materials and supplies physically incorporated therein. Said words shall also include rental charges for construction vehicles, equipment and machinery rented specifically for use on the Project Site, or while being used exclusively for the transportation of materials for the Project.

SC-6.12 ***Record Documents*****:** Add the following new paragraphs immediately after Paragraph 6.12.A.

B. Subject to the provisions of *MGL Chapter 266, Section 67C, Capital facility construction projects, etc.; false entries in records; penalties*, and pursuant to *MGL Chapter 30, Section 39R Definitions; contract provisions; management and financial statements; enforcement:*

1. the Contractor shall make, and keep for at least six years after final payment, books, records, and accounts which in reasonable detail accurately and fairly reflect the transactions and dispositions of the contractor, and until the expiration of six years after final payment, the office of inspector general, and the commissioner of capital asset

management and maintenance shall have the right to examine any books, documents, papers or records of the Contractor or of his Subcontractors that directly pertain to, and involve transactions relating to, the Contractor or his Subcontractors; and

2. the Contractor shall describe any change in the method of maintaining records or recording transactions which materially affect any statements filed with the Awarding Authority and included in Section 00 54 00, including in his description the date of the change and reasons therefor, and shall accompany said description with a letter from the Contractor's independent certified public accountant approving or otherwise commenting on the changes.

3. The Contractor shall annually file with the commissioner of capital asset management and maintenance during the term of the Contract, a financial statement prepared by an independent certified public accountant on the basis of an audit by such accountant. The final statement filed shall include the date of final payment. All statements shall be accompanied by an accountant's report. Such statements shall be made available to the Awarding Authority upon request.

4. Contractor's failure to satisfy any of the requirements of this of the MGL section may be grounds for debarment pursuant to *MGL Chapter 149, Section 44C, Suspension or debarment of contractors.*

SC-10.01 ***Authorized Changes in the Work***: Add the following paragraph immediately after Paragraph 10.03.A.

1. Changes to the Work are subject to the requirements of *MGL Chapter 30, Section 39I, Deviations from plans and specifications.*

SC-10.05 ***Claims*****:** Add the following paragraph immediately after Paragraph 10.05.G.

H. Presentation of false, fictitious, or fraudulent Claims is subject to the provisions of *MGL Chapter 266, Section 67B, Presentation of false claims*.

SC-11.01. ***Cost of the Work***:

Add the following new paragraph immediately after Paragraph 11.01.A.5.d.

1) The Project is exempt from sales tax as set forth in SC-6.10 of Section 00 73 73.

SC-14.02. ***Progress Payments***

Add the following new paragraph immediately after Paragraph 14.02.A.1.

a. Pursuant to *MGL Chapter 30, Section 39S, Contracts for construction; requirements***,** provide certification for each employee employed at the Work Site of successful completion of a course in construction safety and health approved by the United States Occupational Safety and Health Administration that is at least 10 hours in duration at the time the employee begins Work.

Add the following new paragraph immediately after Paragraph 14.02.C.1.

2. The provisions of *MGL Chapter 30, Section 39G Completion of public works; semi-final and final estimates; payments; extra work; disputed items* covering "periodic estimate" and "periodic payment" apply to this Project and shall be considered Progress Payments per Paragraph 14.02. However, the Engineer will perform some of indicated actions on behalf of the Awarding Authority as its representative and consistent with the role and responsibilities defined in the Standard General and Supplementary Conditions and Additional Supplementary Conditions, and the forms listed in Section 00 60 00 and included in the Contract Documents will be utilized.

Add the following new paragraph immediately after Paragraph 14.02.D.3.

E. The following provisions regarding payment to Subcontractors are required by *MGL Chapter 30, Section 39F Construction contracts; assignment and subrogation; subcontractor defined; enforcement of claim for direct payment; deposit, reduction of disputed amounts*. These provisions shall be included in any subcontract in connection with Work under the Contract Documents.

1. The Engineer will perform some of indicated actions on behalf of the Awarding Authority as its representative, consistent with the role and responsibilities defined in the Standard General and Supplementary Conditions and Additional Supplementary Conditions, if any.

a. Forthwith after the general Contractor receives payment on account of a periodic estimate, the general Contractor shall pay to each Subcontractor the amount paid for the labor performed and the materials furnished by that Subcontractor, less any amount specified in any court proceedings barring such payment and also less any amount claimed due from the Subcontractor by the general Contractor.

b. Not later than the 65th day after each Subcontractor substantially completes his Work in accordance with the Plans and Specifications, the entire balance due under the subcontract less amounts retained by the Awarding Authority as the estimated cost of completing the incomplete and unsatisfactory items of Work, shall be due the Subcontractor; and the Awarding Authority shall pay that amount to the general Contractor. The general Contractor shall forthwith pay to the Subcontractor the full amount received from the Awarding Authority less any amount specified in any court proceedings barring such payment and also less any amount claimed due from the Subcontractor by the general Contractor.

c. Each payment made by the Awarding Authority to the general Contractor pursuant to subparagraphs (a) and (b) above for the labor performed and the materials furnished by a Subcontractor shall be made to the general Contractor for the account of that Subcontractor; and the Awarding Authority shall take reasonable steps to compel the general Contractor to make each such payment to each such Subcontractor. If the Awarding Authority has received a demand for direct payment from a Subcontractor for any amount which has already been included in a payment to the general Contractor or which is to be included in a payment to the general Contractor for payment to the Subcontractor as provided in subparagraphs (a) and (b) above, the Awarding Authority shall act upon the demand as provided in this section of the MGL.

d. If, within 70 days after the Subcontractor has substantially completed the subcontract Work, the Subcontractor has not received from the general Contractor the balance due under the subcontract including any amount due for extra labor and materials furnished to the general Contractor, less any amount retained by the Awarding Authority as the estimated cost of completing the incomplete and unsatisfactory items of Work, the Subcontractor may demand direct payment of that balance from the Awarding Authority. The demand shall be by a sworn statement delivered to or sent by certified mail to the Awarding Authority, and a copy shall be delivered to or sent by certified mail to the general Contractor at the same time. The demand shall contain a detailed breakdown of the balance due under the subcontract and also a statement of the status of completion of the subcontract work. Any demand made after substantial completion of the subcontract work shall be valid even if delivered or mailed prior to the seventieth day after the Subcontractor has substantially completed the subcontract work. Within 10 days after the Subcontractor has delivered or so mailed the demand to the Awarding Authority and delivered or so mailed a copy to the general Contractor, the general Contractor may reply to the demand. The reply shall be by a sworn

statement delivered to or sent by certified mail to the Awarding Authority and a copy shall be delivered to or sent by certified mail to the Subcontractor at the same time. The reply shall contain a detailed breakdown of the balance due under the subcontract including any amount due for extra labor and materials furnished to the general Contractor and of the amount due for each Claim made by the general Contractor against the Subcontractor.

e. Within 15 days after receipt of the demand by the Awarding Authority, but in no event prior to the seventieth day after substantial completion of the subcontract work, the Awarding Authority shall make direct payment to the Subcontractor of the balance due under the subcontract including any amount due for extra labor and materials furnished to the general Contractor, less any amount (i) retained by the Awarding Authority as the estimated cost of completing the incomplete or unsatisfactory items of Work, (ii) specified in any court proceedings barring such payment, or (iii) disputed by the general Contractor in the sworn reply; provided, that the Awarding Authority shall not deduct from a direct payment any amount as provided in part (iii) if the reply is not sworn to, or for which the sworn reply does not contain the detailed breakdown required by subparagraph (d). The Awarding Authority shall make further direct payments to the Subcontractor forthwith after the removal of the basis for deductions from direct payments made as provided in parts (i) and (ii) of this subparagraph.

f. The Awarding Authority shall forthwith deposit the amount deducted from a direct payment as provided in part (iii) of subparagraph (e) above in an interest-bearing joint account in the names of the general Contractor and the Subcontractor in a bank in Massachusetts selected by the Awarding Authority or agreed upon by the general Contractor and the Subcontractor and shall notify the general Contractor and the Subcontractor of the date of the deposit and the bank receiving the deposit. The bank shall pay the amount in the account, including accrued interest, as provided in an agreement between the general Contractor and the Subcontractor or as determined by decree of a court of competent jurisdiction.

g. All direct payments and all deductions from demands for direct payments deposited in an interest-bearing account or accounts in a bank pursuant to subparagraph (f) above shall be made out of amounts payable to the general Contractor at the time of receipt of a demand for direct payment from a Subcontractor and out of amounts which later become payable to the general Contractor and in the order of receipt of such demands from Subcontractors. All

direct payments shall discharge the obligation of the Awarding Authority to the general Contractor to the extent of such payment.

h. The Awarding Authority shall deduct from payments to a general Contractor amounts which, together with the deposits in interest-bearing accounts pursuant to subparagraph (f) above, are sufficient to satisfy all unpaid balances of demands for direct payment received from Subcontractors. All such amounts shall be earmarked for such direct payments, and the Subcontractors shall have a right in such deductions prior to any Claims against such amounts by creditors of the general Contractor.

SC 14.04 ***Substantial Completion:*** Add the following new paragraph immediately after Paragraph 14.04.F.

F. The provisions of *MGL Chapter 30, Section 39G Completion of public works; semi-final and final estimates; payments; extra work; disputed items* covering substantial completion apply to this Project. However, the Engineer will perform some of indicated actions on behalf of the Awarding Authority as its representative, consistent with the role and responsibilities defined in the Standard General and Supplementary Conditions and Additional Supplementary Conditions if any, and the forms listed in Section 00 60 00 and included in the Contract Documents will be utilized.

SC 14.07 ***Final Payment:*** Add the following new paragraph immediately after Paragraph 14.07.C.1.

D. The provisions *of MGL Chapter 30, Section 39G Completion of public works; semi-final and final estimates; payments; extra work; disputed items* covering the final estimate and completion of the Work apply to this Project. However, the Engineer will perform some of indicated actions on behalf of the Awarding Authority as its representative, consistent with the role and responsibilities defined in the Standard General and Supplementary Conditions and Additional Supplementary Conditions if any, and the forms listed in Section 00 60 00 and included in the Contract Documents will be utilized.

SC-15.01 ***Owner May Suspend Work:*** Add the following new paragraphs immediately after Paragraph 15.01.A.

1. Pursuant to *MGL Chapter 30, Section 39O, Contracts for construction and materials; suspension, delay or interruption due to order of awarding authority; adjustment in contract price; written claim*, the Awarding Authority may order the general Contractor in writing to suspend, delay, or interrupt all or any part of the Work for such period of time as it may determine to be appropriate for the convenience of the Awarding Authority; provided however, that if there is a suspension, delay or interruption for 15 days or more or due to a failure of the Awarding

Authority to act within the time specified in the Contract, the Awarding Authority shall make an adjustment in the Contract Price for any increase in the cost of performance of the Contract but shall not include any profit to the general Contractor on such increase; and provided further, that the Awarding Authority shall not make any adjustment in the Contract Price under this provision for any suspension, delay, interruption or failure to act to the extent that such is due to any cause for which this Contract provides for an equitable adjustment of the Contract Price under any other Contract provisions.

2. The general Contractor must submit the amount of a Claim under provision 1 above to the Awarding Authority in writing as soon as practicable after the end of the suspension, delay, interruption or failure to act and, in any event, not later than the date of final payment under the Contract and, except for costs due to a suspension order, the Awarding Authority shall not approve any costs in the Claim incurred more than 20 days before the general Contractor notified the Awarding Authority in writing of the act or failure to act involved in the Claim.

3. In the event a suspension, delay, interruption or failure to act of the Awarding Authority increases the cost of performance to any Subcontractor, that Subcontractor shall have the same rights against the general Contractor for payment for an increase in the cost of his performance as provisions 1 and 2 above give the general Contractor against the Awarding Authority, but nothing in provisions 1 and 2 above shall in any way change, modify or alter any other rights which the general Contractor or the Subcontractor may have against each other.

SC-17.05 Controlling Law: Add the following new paragraphs immediately after Paragraph 17.05.A.

1. This Contract is subject to all Laws and Regulations of the United States of America (including the U.S. Code of Federal Regulations), the Commonwealth of Massachusetts and other public authorities, and all amendments thereto. Where any requirements contained herein do not conform to or are inconsistent with such Laws and Regulations to which the Contract is subject or by which it is governed, such Laws and Regulations shall have precedence over any matters set forth herein.

2. The Project is specifically subject to MGL Chapters 30 and 149 for contracts awarded pursuant to MGL Chapter 30, Section 39M.

3. Statutes, regulations, and portions and summaries thereof which are set forth or referred to in the Contract Documents shall be construed to include all amendments thereto in effect at the time of opening of Bids (or on the Effective Date of the Agreement if there were no Bids). The Owner and Engineer make no representation as to and assume no responsibility for the correctness or completeness of such statutory matters referred to or set forth herein.

4. Any provision in violation of the foregoing shall be deemed null, void and of no effect. Where conflicts with Laws and Regulations exist, the more stringent requirement shall apply.

END OF SECTION

This page intentionally left blank

SECTION 01 00 10

OVERALL GENERAL REQUIREMENTS

PART 1 – GENERAL

1.01 SECTION INCLUDES

A. PRICE AND PAYMENT PROCEDURES

Schedule of Values
Payment Procedures
Change Procedures
Measurement and Payment Requirements
Correlation of Submittals

B. ADMINISTRATIVE REQUIREMENTS

Project Management and Coordination; Meetings
Documentation of Progress
Submittal Procedures
Closeout Procedures

C. QUALITY REQUIREMENTS

Reference Standards and Regulatory Requirements
Qualifications

D. SOURCE QUALITY CONTROL

General
Independent Testing Agency Certification
Factory Testing

E. PRODUCT REQUIREMENTS

General
Transportation and Handling
Storage and Protection

F. TEMPORARY CONSTRUCTION FACILITIES

Barriers
Protection of Work
Security
Safety Facilities
Access Roads
Parking
Progress Cleaning and Waste Removal
Field Offices
Project Identification

G. TEMPORARY UTILITIES

H. TEMPORARY CONTROLS

Dust Control
Water Control and Dewatering
Erosion and Sediment Control
Noise Control
Pollution Control
Traffic Regulation

I. REMOVAL OF TEMPORARY UTILITIES, FACILITIES, AND CONTROLS

J. OVERALL EXECUTION REQUIREMENTS

Coordination
Existing Conditions
Field Engineering
Record Documents
Cutting and Patching
Quality Assurance and Control Of Installation
Manufacturers' Field Services
Independent Testing

K. STARTUP, TESTING, AND COMMISSIONING

Spare Parts
Consumables
Checkout and Starting Systems
Starting, Adjusting, and Balancing
Performance Testing
Demonstration and Training

1.02 PRICE AND PAYMENT PROCEDURES

A. Schedule of Values

1. Submit preliminary and final Schedule of Values in accordance with Article 2 of the Standard General and Supplementary Conditions and Additional Supplementary Conditions.

2. Provide sufficient detail to allow for determination of the value of the Work at any degree of completion.

B. Payment Procedures

1. Reference Article 14 of Standard General and Supplementary Conditions and Additional Supplementary Conditions. Submit 6 copies of each Application for Payment using the form included in the Project Forms section. Utilize latest approved Schedule of Values for listing items in Application for Payment.

2. Payment Period: at intervals stipulated in the Agreement.

3. Submit an updated Progress Schedule with each Application for Payment.

C. Change Procedures

1. Reference Articles 10 and 12 of Standard General and Supplementary Conditions and Additional Supplementary Conditions and forms included in the Project Forms sections.

a. Field Order: issued by Engineer or Owner to advise of minor changes in the Work not involving an adjustment to Contract Price or Contract Time as authorized by Paragraph 9.04 of the Standard General and Supplementary Conditions and Additional Supplementary Conditions.

b. Change Request: issued by Engineer, Owner or Contractor to amend or supplement the Contract Documents as authorized by Standard General and Supplementary Conditions and Additional Supplementary Conditions, Paragraph 3.04. Initiate requests for substitute items per Paragraph 6.05 of the Standard General and Supplementary Conditions and Additional Supplementary Conditions as a Change Request.

1) Engineer or Owner to include a detailed description of a proposed change with supplementary or revised Drawings and Specifications, including a change in Contract Times related to the change (with a stipulation for any overtime work required) and the period of time during which the

requested price will be considered valid. Prepare and submit an estimate within 15 days.

2) Contractor to describe the proposed change and its full effect on the Work. Describe the reason for the change and the effect on the Contract Price and Contract Time with full documentation (and a statement describing the effect on Work by separate or other contractors). Document any requested substitutions in accordance with the Standard General and Supplementary Conditions and Additional Supplementary Conditions.

c. Work Change Directive: issued by Engineer or Owner, signed by Engineer or Owner and instructing Contractor to proceed with a change in the Work. Work authorized in a Work Change Directive will be included in a subsequent Change Order. Document will describe changes in the Work, and designate method of determining any change in Contract Price or Contract Time. Promptly execute the change.

d. Change Order: issued by Engineer or Owner in accordance with the Standard General and Supplementary Conditions and Additional Supplementary Conditions.

1) *Stipulated Price Change Order*: based on Contractor's maximum price quotation or Contractor's request for a Change Order as approved by Engineer or Owner.

2) *Unit Price Change Order*: for pre-determined unit prices and quantities and executed on a fixed unit price basis. Execute Work under a Work Change Directive for unit costs or quantities of work not pre-determined. Changes in Contract Price and Contract Time to be computed as specified for Time and Material Change Order.

3) *Time and Material Change Order*: based on itemized account and supporting data after completion of change within time limits indicated in the Standard General and Supplementary Conditions and Additional Supplementary Conditions. Engineer or Owner and Contractor to determine the change allowable in Contract Price and Contract Time as provided in the Standard General and Supplementary Conditions and Additional Supplementary Conditions. Maintain detailed records of work done on this basis, provide full information required for evaluation of proposed changes, and substantiate costs for changes in the Work.

e. Substitutes and "Or Equals": Request substitute items as a Change Request in accordance with Paragraph 3 above, with complete data substantiating compliance of proposed substitution with Contract Documents.

1) Substitute items will be processed in accordance with Article 1.03 Paragraph C below and Paragraph 6.05 of the Standard General and Supplementary Conditions and Additional Supplementary Conditions.

2) Substitute items will not be considered when indicated or implied on Shop Drawing or material and equipment data submittals without separate written request, or when acceptance will require revision to the Contract Documents.

D. Measurement and Payment Requirements

1. Unit Prices

a. Take measurements in presence of Engineer and compute quantities. Engineer or Owner to verify and also take measurements and quantities. Notify Engineer or Owner in advance when measurements must be taken.

b. Unit quantities and measurements indicated in the Bid Form and Bid Form Supplements, if any, are for contract purposes only. Actual quantities and measurements supplied or placed in the Work determine amount of payment.

2. Payment includes full compensation for required labor, material and equipment, tools, plant, transportation, services and incidentals; erection, application or installation of an item of the Work; and overhead and profit.

E. Correlation of Submittals

1. Promptly revise Schedule of Values (if any) and Applications for Payment to record each authorized Change Order as a separate line item and adjust the Contract Price.

2. Promptly revise Progress Schedule to reflect any change in Contract Times and revise sub-schedules to adjust time for other items of the Work affected by the change.

3. Promptly enter changes in Project Record Documents.

1.03 ADMINISTRATIVE REQUIREMENTS

A. Project Management and Coordination; Meetings

1. Contact information for Owner and other entities related to the Project and special coordination requirements and contacts during prosecution of the Work are included in the **Specific Project Requirements and Procedures**.

2. Inform Owner and Engineer of the address for sending official correspondence and the address and telephone number of Contractor's representative who will be project manager and Site superintendent for the Contract and identify responsible person available outside of normal working hours for emergency repairs and maintenance of safety devices.

3. During periods of construction and testing keep Owner and Engineer informed in writing with name, address, and telephone number of Contractor's representative who will be responsible and available outside of normal working hours for emergency repairs and the maintenance of safety devices.

4. Identify correspondence, drawings, data and materials, packing slips or other items associated with this Contract as specified in the **Specific Project Requirements and Procedures**.

5. Coordinate scheduling, submittals, and Work of the various Specifications to effectuate an efficient and orderly sequence for installing interdependent construction elements, with provisions for accommodating items installed later.

6. Preconstruction Conference and Site Mobilization Meeting

   a. Owner to schedule an initial preconstruction conference in accordance with the Standard General and Supplementary Conditions and Additional Supplementary Conditions Paragraph 2.06.

   b. Attendance required by Owner, Contractor, Engineer, Contractor's Superintendent, Project Manager, Suppliers and Subcontractors.

   c. Agenda

      - Distribute Contract Documents
      - Discuss design concepts
      - Discuss preliminary Progress Schedule, Schedule of Submittals, Schedule of Values and preliminary cash flow projections.

- Designate personnel representing each party; communication procedures
- Procedures and processing of submittals, substitutions, applications for payments, Change Orders and Contract closeout procedures
- Scheduling
- Use of premises by Owner and Contractor
- Owner's requirements and partial occupancy
- Construction facilities and controls provided by Owner
- Temporary utilities provided by Owner and Contractor
- Survey and Site Layout
- Security and housekeeping procedures
- Schedules
- Procedures for testing
- Procedures for maintaining record documents
- Requirements for start-up
- Inspection and acceptance of equipment put into service during construction period
- Access, laydown and coordination with others

d. Engineer will record minutes and distribute draft copies within 2 days after meeting to Owner and Contractor for review, then revise as required and distribute within 5 days thereafter to meeting participants, with copies to Owner and Contractor, and those affected by decisions made.

7. Progress Meetings

a. Owner to schedule progress meetings beginning no later than 60 days after the Initial Conference and continue thereafter on a weekly, biweekly or monthly basis throughout progress of the Work as specified in the **Specific Project Requirements and Procedures**.

b. Attendance required by Contractor, Contractor's Superintendent, major Subcontractors and Suppliers, Owner and Engineer as appropriate to agenda topics for each meeting.

c. Agenda:

- Review minutes of previous meetings
- Unresolved Issues
- Review Work progress
- Observations, problems, and decisions
- Identification of problems which impede planned progress
- Review of Schedule of Submittals and status of submittals
- Review of off-Site fabrication and delivery schedules

- Maintenance of progress schedule
- Corrective measures to regain projected schedules
- Planned progress during succeeding Work period
- Coordination of projected progress
- Maintenance of quality and Work standards
- Effect of proposed changes on Progress Schedule and coordination
- Other business relating to Work

d. Engineer will record minutes and distribute draft copies within 2 days after meeting to Owner and Contractor for review, then revise as required and distribute within 5 days thereafter to meeting participants, with copies to Owner and Contractor, and those affected by decisions made.

8. Pre-installation Conference and Coordination Meetings

a. When required, convene a pre-installation conference at Site before commencing certain Work that requires coordination or has special requirements or approvals or convene coordination meetings as may be generally required.

b. Attendance required by parties directly affecting, or affected by, Work of the specific Specification section. Notify Owner and Engineer 5 days in advance of pre-installation conference. Party requesting general coordination meeting to notify other party.

c. Review conditions, preparation and procedures, and coordination with related Work.

B. Documentation of Progress

1. Submit preliminary and final Progress Schedules as specified in Article 2 of the Standard General and Supplementary Conditions and Additional Supplementary Conditions or as established in Notice to Proceed.

2. Submit revised Progress Schedule on monthly basis and with each Application for Payment, identifying changes since previous version. Coordinate content with Schedule of Values, if any.

a. Show complete sequence of construction by activity, identifying Work of separate stages and other logically grouped activities. Indicate the early and late start, early and late finish, float dates, and duration.

b. Indicate estimated percentage of completion for each item of Work at each submission.

c. Indicate dates for fabrication, factory testing, delivery, shipping and field testing, and material and equipment delivery dates, including those furnished by Owner. Coordinate with Schedule of Submittals.

3. Provide documentation of pre-construction conditions and construction progress using either or both of the following methods as specified in the **Specific Project Requirements and Procedures**.

a. Construction Photographs

1) Prior to starting construction, submit photographs of existing Site conditions to Owner to establish a record of pre-construction conditions. Ensure existing conditions of roadway surfaces, curbing, berms, sidewalks, driveways, property bounds, landscaped areas, abutters property and any other items that might be affected by the Work are clearly recorded.

2) Format: electronic in .PDF. or JPG format and with maximum 4 prints, 8-1/2 by 11 sheets.

3) Identify photographs with date, time, orientation and Project identification.

4) Submit photographs during progress of Work monthly with Payment Application.

b. Digital Video Recording

1) Prior to the start of construction, video record, in color, all areas of the Project Site in the presence of the Engineer to establish a record of pre-construction conditions. Ensure existing conditions of roadway surfaces, curbing, berms, sidewalks, driveways, property bounds, landscaped areas, abutters' property and any other items that might be affected by the Work are clearly recorded.

2) Video recordings to be conducted by a professional video-photographer in digital videodisc (DVD) format. Include clear and concise audio descriptions of the existing Project Site conditions.

3) Submit a copy of the first completed video recording to the Engineer for review of visual and audio quality. Once approved, submit 2 copies of video recordings. Re-record any recording furnished which, in the opinion of the Engineer, are poor quality or incomplete at no additional cost to Owner.

4. Reports

   a. Submit weekly Safety Reports signed by the responsible on-Site person.

   b. Submit other reports as specified in **Specific Project Requirements and Procedures**, if any.

C. Submittal Procedures

1. Schedule submittals to expedite the Project and coordinate with schedules required by Article 1.03 Paragraph B above. Deliver each submittal in the quantity indicated to Engineer (with copy to Owner where required) at the addresses specified in the **Specific Project Requirements and Procedures**. Coordinate submission of related items.

2. Present submittals in a clear and thorough manner and use sheet size of not less than 8 1/2 by 11 inches and not more than 24 by 36 inches. Provide space for Contractor, Engineer, and Owner's review stamps.

3. Revise and resubmit documents as required. Identify all changes made since previous submittal. Distribute copies of reviewed submittals to concerned parties. Instruct parties to promptly report any inability to comply with provisions. Submittals not requested on the submittal schedule may not be recognized or processed.

4. Submit preliminary and final schedule of submittals as specified in Article 2 of the Standard General and Supplementary Conditions and Additional Supplementary Conditions or as established in Notice to Proceed. Include all submittals specified in the Specifications and the Standard General and Supplementary Conditions and Additional Supplementary Conditions.

   a. Include description of each Submittal, date by which each Submittal will be delivered to Engineer and Owner date by which each submittal must be approved to maintain project schedule, and relevant section reference.

   b. Allow 15-30 days for Engineer review of submittals and possible resubmittal from receipt of submittal/resubmittal.

5. <u>Shop Drawings and Samples</u>: Submit in accordance with Paragraph 6.17 of the Standard General and Supplementary Conditions and Additional Supplementary Conditions and coordinate with the schedule of submittals required in Paragraph 4 above. Submission of any Shop Drawing or Sample bearing Contractor's and Engineer's approval shall constitute a representation to Owner that the requirements of Paragraph 6.17 of the Standard General and Supplementary Conditions and Additional Supplementary Conditions have been fulfilled.

a. Complete the submittal transmittal form included as Attachment A to this Section as is indicated, numbering each submittal consecutively. Assign resubmittals the same transmittal number as the original with a suffix of a sequential letter to indicate the resubmittal (e.g. the first resubmittal of submittal 25 would be number 25A.) Include only those documents previously issued under original transmittal number in resubmittals. Do not combine new submittals with resubmittals.

b. Attach a transmittal form to each group of Shop Drawings, manufacturer's literature, equipment data and Samples submitted. Use a sufficient number of transmittal forms so that: items on a single transmittal form pertain to the same equipment item, specification section or element of Work; items on a single transmittal form are either original submittals or the same number resubmittal; and each Sample is listed on a separate transmittal form.

c. Submittals which do not have a fully completed transmittal form will be returned along with unreviewed attachments. Returned submittals, even though incomplete, will be counted as a submittal in accordance with the Supplementary Conditions.

d. Manufacturers' Installation Instructions and Certificates: Submit printed instructions for delivery, storage, assembly, installation, start-up, adjusting, and finishing. Indicate special procedures, perimeter conditions requiring special attention and special environmental criteria required for application or installation. Submit manufacturers' certificates for recent or previous test results on material or equipment, but they must be acceptable to Engineer and Owner. Indicate material or equipment conforms to or exceeds specified requirements and provide supporting reference date, affidavits, and certifications as appropriate.

e. Submit test results, data, and reports and certifications to Engineer based on tests performed. Submit test reports and certifications for independent testing services specified.

f. Submit hard copies and/or or electronic PDF files to the Engineer for review as specified in the **Specific Project Requirements and Procedures**.

g. Identify variations from Contract Documents and material and equipment or system limitations which may be detrimental to successful performance of the completed Work and identify reasons therefor in accordance with Paragraph 6.17.C.3 of the Standard General and Supplementary Conditions and Additional Supplementary Conditions. Clearly identify requests for “Or-Equal” items and submit per Paragraph 6.05.A of Standard General and Supplementary Conditions and Additional Supplementary

Conditions and Article 1.02 Paragraph C.6 above. Substitute items will not be considered when indicated or implied on Shop Drawing or material and equipment data submittals without separate written request, or when acceptance will require revision to the Contract Documents.

h. Engineer to complete review in accordance with Paragraph 6.17.D. of the Standard General and Supplementary Conditions and Additional Supplementary Conditions.

i. Per the Standard General and Supplementary Conditions, Contractor shall reimburse Owner for Engineer's time beyond one re-submittal.

6. Record Documents and Closeout Submittals: submit in accordance with Paragraph 6.12 of the Standard General and Supplementary Conditions and Additional Supplementary Conditions and Article 1.03 Paragraph D below.

a. *As-Builts for Material and Equipment*: prints and electronic files in ".DXF", ".DWG" and/or "PDF" format as specified in the **Specific Project Requirements and Procedures**. Indicate "As-Supplied" in revision block and sign. Show all changes and revisions to Final Completion per Article 3.05 Paragraph D.

b. *Conformed to Construction Record Drawings*: full size prints and electronic files in ".DXF", ".DWG" and/or "PDF" format specified in the **Specific Project Requirements and Procedures**. Indicate "Conformed by Contractor to Construction Records" in revision block and sign. Show all changes and revisions to Final Completion per Article 3.05 Paragraph D.

c. *Warranties and Guarantees*: Submit duplicate notarized copies of warranty documents which are executed and transferable from Subcontractors, Suppliers, and manufacturers. For items of Work delayed beyond date of Substantial Completion, provide updated submittal within 10 days after acceptance, listing date of acceptance as start of Warranty Period. Assemble in three ring binders with durable plastic cover with a table of contents.

d. Operation and Maintenance Data

1) Submit data in ring binders with durable plastic covers with 8 1/2 by 11 inch text pages. Cover: title "OPERATION AND MAINTENANCE INSTRUCTIONS", title of Project, and subject matter of binder when multiple binders are required.

2) Subdivide binder contents with permanent page dividers, logically organized as described below with laminated plastic tabs and clearly print the contents. Prepare a Table of Contents for each volume, with material, equipment, or system description identified, in three parts as follows:

Part 1: Directory, listing names, addresses, and telephone numbers of Contractor, Subcontractors, and major equipment Suppliers, and service representative.

Part 2: Operation and maintenance instructions arranged by system and subdivided by Specification section. For each category, identify names, addresses, and telephone numbers of Subcontractors and Suppliers. Identify the following:

- Significant design criteria
- List of equipment with As-Builts certified "As-Supplied"
- Parts list for each component
- Operating instructions
- Inspection, maintenance and adjustment instructions for equipment and systems
- Lubrication and maintenance schedules
- Maintenance instructions for special finishes, including recommended cleaning methods and materials, and special precautions identifying detrimental agents
- Troubleshooting guides
- Schematic diagrams

Part 3: Material Safety Data Sheets

Part 4: Other Project documents and certificates, including the following:
- Certificates
- Photocopies of warranties

3) Submit one draft copy of completed volumes 15 days prior to final inspection. Include 2 copies of completed manuals with major equipment when equipment is shipped. Draft copies will be reviewed and returned after final inspection, with Engineer's comments. Revise content of all sets as required prior to final submission. Submit 6 copies of revised final volumes, with electronic files in ".PDF" format on CD, within 10 days after final inspection.

D. Closeout Procedures

1. Substantial Completion shall have been achieved when the following has been completed and the requirements of Paragraph 14.04 of the Standard General and Supplementary Conditions and Additional Supplementary Conditions have been met.

   a. Work is complete, systems are successfully operating, and final testing has been successfully completed.

   b. A full inventory of the spare parts and special tools purchased by the Owner are replenished and in the custody of the Owner.

   c. An inspection of the Work has been completed by the Engineer and the Owner.

   d. An updated Punch List is provided.

   e. A Certificate of Substantial Completion has been provided in accordance with Paragraph 14.04.C. of the Standard General and Supplementary Conditions and Additional Supplementary Conditions.

2. The Contractor shall have sole care, custody, and control of the Work until achievement of Substantial Completion. During the period between Substantial Completion and the date for Final Completion, Contractor shall be given access to correct items on the Punch List and achieve Final Completion.

3. The date of achieving Substantial Completion is the date set forth in the Certificate of Substantial Completion that is accepted and signed by the Owner.

4. Final Completion shall have been achieved when the Work is complete, when the following is complete, and the requirements of Paragraphs 14.06 and 14.07 of the Standard General and Supplementary Conditions and Additional Supplementary Conditions have been met.

   a. Substantial Completion has been achieved and liquidated damages for failure to meet Substantial Completion Date have been paid.

   b. All Work including Punch List Items has been completed.

   c. Final cleaning has been conducted and Contractor equipment and supplies including waste materials have been removed from the Site and legally disposed of.

   d. A full set of record documents have been submitted as specified in Article 1.03 Paragraph C.6 above.

e. Inspections required by Laws and Regulations are complete. Certificates and permits to occupy and operate have been issued if required.

f. Spare parts, maintenance and extra materials have been delivered in quantities specified to Project Site and stored as directed.

g. A request for final inspection in accordance with Paragraph 14.06 of the Standard General and Supplementary Conditions and Additional Supplementary Conditions has been submitted to the Engineer and the inspection has been completed and the results accepted by the Owner.

h. A Certificate of Completion has been provided in accordance with Paragraph 14.07.B of the Standard General and Supplementary Conditions and Additional Supplementary Conditions.

i. A Final Application for Payment has been submitted to the Engineer identifying total adjusted Contract Price, previous payments, and balance due along with required documentation in accordance with Paragraph 14.07.A. of the Standard General and Supplementary Conditions and Additional Supplementary Conditions.

5. Owner will make Final payment and acceptance in accordance with Paragraphs 14.07 C and 14.08 of the Standard General and Supplementary Conditions and Additional Supplementary Conditions.

1.04 QUALITY REQUIREMENTS

A. Reference Standards and Regulatory Requirements

1. Reference to standards, specifications, manuals or codes of any technical society, organization or association, or Laws or Regulations of any governmental authority are used in accordance with Paragraph 3.02 of the General Conditions.

2. Acronyms and abbreviations used are defined in the applicable versions of the Encyclopedia of Associations published by Gale (part of Cengage Learning) generally available in large libraries and on the internet.

B. Qualifications

1. Meet or provide capability to meet the criteria specified in connection with the Work of the Contract Documents.

2. As a minimum, Contractor shall:

   a. have been regularly and actively engaged in similar Work as described in the Contract Documents, operating under the same business name and business organization structure, for the last 5 years on at least 5 projects;

   b. have successfully completed at least 3 projects involving construction of similar facilities in the same state as the Project covered by the Contract Documents;

   c. have a full-time project manager in responsible charge of the Work with at least 10 years' experience as project manager on comparable projects;

   d. have a 24 hour, 7 days per week emergency response telephone or cell phone number that is staffed by a person (not a passive answering machine) or will provide that a phone call will be returned within one hour; and

   e. carry at least the insurance coverage and amounts required in Article 5 of the Standard General and Supplementary Conditions and Additional Supplementary Conditions.

PART 2 – PRODUCTS

2.01 SOURCE QUALITY CONTROL

A. General

1. Subject material and equipment furnished under these Contract Documents to a complete factory testing program as specified.

2. Shop Drawings and submittals: reviewed by Engineer before initiating testing program.

3. Perform checks and tests in accordance with manufacturer's recommendations and referenced standards.

4. Evaluate test results and advise Owner immediately of any discrepancy between test results and test limits or the failure of any device or system under test. Include test limits for acceptability applicable to each test on the certified test records.

5. Record test information, including the evaluation of testing results, on forms approved by Owner and Engineer.

B. Independent Testing Agency Certification

1. If specified, furnish certificates from an independent testing agency.

2. Independent testing agency to certify that material and equipment components have been examined and tested and are in conformance with the requirements specified in the Contract Documents.

3. Take Samples in accordance with the requirements specified in the Contract Documents, as selected by Owner or independent testing agency. Furnish and ship at no additional cost to Owner.

C. Factory Testing

1. Provide 14 days prior written notice of factory inspections and tests to Owner and Engineer.

2. If failure to give proper written notice results in material and equipment being assembled or covered before a factory inspection or test, make material and equipment ready for inspection or test and reassemble or recover at no additional cost to Owner.

3. Owner may inspect any portion of material and equipment furnished at any reasonable time during manufacture and may witness testing of any portion of material and equipment wherever located. Owner and Engineer to witness tests only.

4. Furnish, set up and operate test equipment and facilities.

5. If facilities for conducting required tests are unavailable to the manufacturer, conduct tests elsewhere or have them performed by an independent agency approved by Owner.

6. Protect material and equipment after testing and checking to provide that subsequent testing of other equipment or systems does not disturb, damage or otherwise interfere with functional capability of material and equipment.

7. Assume responsibility for protection of material and equipment and safety of all personnel during factory testing program.

8. Grounds for rejection: failure to withstand tests; failure to meet ratings; failure to meet applicable standards.

9. In the event of failure

   a. Submit revisions of documents requiring approval for changes required for rectification.

   b. Obtain Owner's and Engineer's approval before making such changes.

   c. Provide written details of any changes to be made not requiring approval.

   d. Notify Owner and Engineer in writing before retesting.

   e. Furnish new material and equipment which meets requirements of the specified in the Contract Documents if rejected material and equipment cannot be rectified to satisfaction of Owner and Engineer.

   f. Retest after rectification in presence of Owner or Engineer.

10. Assume responsibility for all costs, including, but not limited to: loss or damage to materials and equipment resulting from testing; retesting; rectification; new material and equipment to replace damaged or non-rectifiable material and equipment; removal, furnishing, transportation, unloading, and installation of replacement material and equipment; and witness of testing by Owner and Engineer including travel, lodging, meals, and payroll.

11. Submit certified test reports which define tests, list results, and are signed by Contractor's representative, and copies of raw data collected during tests in accordance with Article 1.03 Paragraph C above. Submission of certified test reports does not relieve Contractor of responsibility for material and equipment meeting requirements of the Contract Documents after installation.

2.02 PRODUCT REQUIREMENTS

A. General

1. Products include new material and equipment incorporated into the Work and may also include existing material and equipment required for reuse. This does not include machinery and equipment used for preparation, fabrication, conveying, installation and erection of the Work.

2. Do not use materials and equipment removed from existing Work Site, except as specifically permitted.

3. Provide complete with accessories, trim, finished, safety guards, and other devices and details need for a complete installation and for the intended use or effect.

4. Provide standard products which have been produced and used successfully on other similar projects for similar applications. Provide products which are likely to be available to Owner in the future for items required for maintenance and repair or replacement Work.

5. Furnish interchangeable components of the same manufacturer, for similar components.

B. Transportation and Handling

1. Transport and handle material and equipment in accordance with manufacturer's instructions.

2. Notify Engineer and Owner in writing upon acceptance of a shipment.

3. Promptly inspect shipments to assure that material and equipment comply with requirements, quantities are correct, and material and equipment are undamaged.

4. Furnish equipment and personnel to handle material and equipment by methods to prevent soiling, disfigurement, or damage.

5. Uncrate equipment and dispose of packing material properly.

C. Storage and Protection

1. Store and protect material and equipment in accordance with manufacturer's instructions, with seals and labels intact and legible. Store sensitive material and equipment in weather tight, climate controlled enclosures.

2. For exterior storage of fabricated material and equipment, place on sloped supports, above ground.

3. Provide for bonded off Site storage and protection when Site does not permit on Site storage or protection.

4. Cover material and equipment subject to deterioration with impervious sheet covering. Furnish ventilation to avoid condensation or potential degradation of material and equipment.

5. Store loose granular materials on solid flat surfaces in a well-drained area. Avoid mixing with foreign matter.

6. Furnish equipment and personnel to store material and equipment by methods to prevent soiling, disfigurement, or damage.

7. Arrange storage of material and equipment to permit access for inspection. Periodically inspect to assure material and equipment are undamaged and are maintained in acceptable conditions.

8. After receipt of material and equipment, assume responsibility for loss and damage including but not limited to breakage, corrosion, weather damage, and distortion.

PART 3 – EXECUTION

3.01 TEMPORARY CONSTRUCTION FACILITIES

A. Barriers

1. Comply with the requirements of Paragraph 6.11. of the Standard General and Supplementary Conditions and Additional Supplementary Conditions.

2. Furnish barriers to prevent unauthorized entry to and clear delineation of construction areas, to allow for Owner's use of Site, and to protect existing facilities and adjacent properties from damage from construction operations as recommended by OSHA and as otherwise required for the protection of life and property during construction.

3. Construct barricades and protective facilities in accordance with local and state regulations. Furnish and install signs, lights, reflectors, and such protection facilities as may be required.

4. Furnish barricades required by governing authorities for public rights of way.

5. Provide protection for plant life designated to remain. Replace damaged plant life.

6. Protect non owned vehicular traffic, stored materials, Site and structures from damage.

7. If required, furnish commercial grade, minimum 8 foot high chain link fence around construction Site. Equip with vehicular gates with locks.

B. Protection of Work

1. Protect Work during working and non-working hours.

2. Provide special protection where specified in Specifications or Drawings and in accordance with manufacturer recommendations.

3. Furnish temporary and removable protection for installed equipment and material. Control activity in immediate Work area to minimize damage.

4. Protect exterior areas of Work from damage. Prohibit traffic from landscaped areas.

5. Buildings and Enclosures

a. Furnish protective coverings at walls, projections, jambs, sills, and soffits of openings and protect finished floors, stairs, and other surfaces from traffic, dirt, wear, damage, or movement of heavy objects, by protecting with durable sheet materials.

b. Prohibit traffic or storage upon waterproofed or roofed surfaces. If traffic or activity is necessary, obtain recommendations for protection from waterproofing or roofing material manufacturer.

6. Whenever gale or high winds are forecast, take measures to secure loose material, equipment or other items that could be blown and be damaged or cause damage. Do not leave such loose items unsecured at end of a working day. Particular attention shall be taken with scaffolding and items placed or stored on roofs or within a structure prior to being enclosed.

7. Provide for removal of snow and ice which may impede Work, damage the finishes or materials, be detrimental to workers, or impede trucking, delivery, or moving of materials at the Site, or prevent adequate drainage of the Site or adjoining areas.

C. Security

1. Provide protection to stored items, the Work and Owner's operations from unauthorized entry, vandalism, or theft, and against fire, storms and other losses during working and non-working hours.

2. Coordinate with Owner's security program.

D. Safety Facilities

1. Provide first aid and other safety facilities required by Laws and Regulations during working and non-working hours.

E. Access Roads

1. Construct and maintain temporary roads accessing public thoroughfares to serve construction area. Control dust and water.

2. Extend and relocate as Work progress requires. Provide detours necessary for unimpeded traffic flow.

3. Provide for emergency access and maintain throughout the Work Site.

F. Parking

1. Construct temporary gravel surface parking areas to accommodate construction personnel. When Site space is inadequate, provide for off-Site parking.

2. Do not allow construction vehicle parking on existing pavement or sidewalks.

G. Field Offices

1. Furnish weather tight office with lighting, electrical outlets, heating, cooling and ventilating equipment, and equip with furnishings and accessories to accommodate supervision of Work, maintenance of records, and project meetings, including, but not limited to:

- Desk and chairs (2 cushioned office desk chairs and 4 metal fold chairs)
- Plan table with light and stool
- 3 locking file cabinets
- Hanging plan rack
- Book case with 4 shelves
- “All-in-one” color copier, printer, scanner and fax machine, capable of 11 by 17 output (OR separate color copier, color printer, color scanner, all capable of 11 by 17 output, and fax machine)
- Paper stock for duration of Project
- Telephone with answering machine (or telephone service with voicemail feature)
- Refrigerator, microwave, and water cooler with bottled water supply for duration of Project
- First aid kit

2. Furnish separate office for use by Engineer and Resident Project Representative similarly equipped with new equipment and furniture.

3. Locate field offices as specified in **Specific Project Requirements and Procedures** or as shown on the Drawings and maintain utilities per Article 3.02 for the duration of the Project.

H. Staging Area: Locate as specified in **Specific Project Requirements and Procedures** or as shown on the Drawings.

I. Project Identification: If required by Laws and Regulations or Owner, furnish signs with required Project information at designated locations in accordance with Laws and Regulations and as may be specified in **Specific Project Requirements and Procedures**.

J. Progress Cleaning and Waste Removal

1. Comply with the requirements of Paragraph 6.11. B and C of the Standard General and Supplementary Conditions and Additional Supplementary Conditions.

2. Maintain areas free of waste materials, debris, and rubbish and maintain the Site in a clean and orderly condition.

3. Remove debris and rubbish from spaces and other closed or remote spaces before enclosing the space.

4. Collect and remove waste materials, debris, and rubbish from Site at least weekly and legally dispose off-Site.

3.02 TEMPORARY UTILITIES

A. Arrange for and pay for required power service from local electric utility for duration of Project. Exercise measures to conserve energy. Arrange for temporary electric service at location designated by Owner or as shown on the Drawings. Furnish and install required equipment including pole of sufficient height to provide proper clearance and install weatherproof box of such size to house service disconnect, overcurrent protection, electric meter, and other required equipment.

B. Arrange for, pay for, and maintain telephone service and internet access to field offices at time of Project mobilization and for duration of Project.

1. Obtain voicemail feature if answering machine not provided.

2. Provide wireless, high speed broadband internet access via DSL, cable, satellite, or T1.

C. Arrange for, pay for and maintain suitable quality water service as required for duration of Project.

D. Furnish lighting for construction operations. Furnish lighting for exterior staging and storage areas and for security purposes. Maintain lighting and provide routine repairs.

E. Furnish and pay for heat devices and heat and cooling devices as required to maintain specified conditions for construction operations.

F. Ventilate enclosed areas to assist cure of materials, to dissipate humidity, and to prevent accumulation of dust, fumes, vapors, or gases.

G. Furnish and maintain required sanitary facilities and enclosures. Do not use existing facilities.

H. Fire Protection

1. Provide temporary fire protection equipment and services during construction until the permanent system is serviceable per NFPA and local fire code and regulations, and fire marshal's requirements.

2. Use Work procedures that minimize fire hazards to the extent practicable and materials that are fire resistant where possible. Collect and remove combustible debris and waste materials from the Site each day. Store fuels, solvents, and other volatile or flammable materials away from the construction and storage areas in well-marked, safe containers in accordance with Laws and Regulations.

3.03 TEMPORARY CONTROLS

A. Execute Work by methods to minimize raising dust from construction operations. Provide positive means to prevent air-borne dust from dispersing into atmosphere. Utilize the application of sprinkled water to reduce the emission of air-borne soil particulates from the Project Site.

B. Water Control and Dewatering

1. Grade Site to drain away from excavations to approved drainage collection facilities. Ensure collected surface drainage water meets permitted criteria for sediment content prior to discharge.

2. Maintain excavations free of water. Furnish, operate and maintain pumping equipment.

3. Dewater excavations and legally dispose of water in a manner that will not cause injury to public and private property.

4. Protect Site from puddling, ponding or running water.

5. Design, furnish, install, maintain, operate and remove temporary dewatering systems as required to lower and control water levels and hydrostatic pressures in excavations during construction; legally dispose of pumped water; construct, maintain, observe and, except where indicated or required to remain in place, remove dewatering equipment and system at the completion of construction.

   a. Dewatering may include: lowering the water table, intercepting and collecting seepage which may penetrate the support of excavation, slopes or bottom of the excavation; increasing the stability of excavated slopes; preventing loss of material from beneath the slopes or bottom of the excavation; reducing lateral loads on sheeting and bracing; limiting horizontal displacements and stresses in support of excavation to tolerable and allowable levels; preventing displacements of existing structures, utilities, pavements, and sidewalks; improving the excavation and hauling characteristics of sandy soil; preventing rupture or heaving of the bottom of any excavation; and disposing of pumped water.

   b. *Normal dewatering* is defined as using conventional pumps installed in open excavations, ditches, or sumps to control water and allow for installation of the pipe in a dry trench. *Special dewatering* is defined as installing wellpoints, deep wells, or eductor and ejector systems to control groundwater and hydrostatic pressures to allow for installation of the work. Special dewatering includes design of the dewatering system by a Professional Engineer currently registered in the state where the Project is located in good standing, and conducting additional borings or subsurface explorations deemed necessaryby the Contractor, and approved by the Engineer, to support design.

   c. For Special Dewatering, retain the services of a Professional Engineer currently registered in the state where the Project is located in good standing, experienced in design of dewatering systems, to independently evaluate the boring logs and other soils information available to determine those areas that will require special dewatering techniques and to design the required system. If, in the opinion of the Contractor or Contractor’s Dewatering Professional Engineer, additional borings are needed to design special dewatering systems or determine areas where special dewatering techniques will be required, the Contractor shall retain and pay for the services of a boring subcontractor. Contractor's Dewatering Professional Engineer shall provide sufficient on-Site inspection and supervision to assure that the dewatering is carried out in accordance with the approved design.

d. Design a dewatering system capable of:

1) effectively reducing the hydrostatic pressure and lowering the groundwater levels to a minimum of 2 feet below excavation subgrade in the existing fills and any organic peat, and below the excavation subgrade in the existing organic silts/clays unless otherwise directed by the Engineer, so that all excavation bottoms are firm and dry;

2) maintaining a dry and stable subgrade until the structures, pipes, appurtenances, and drainage pipe and structure bedding to be built therein have been completed to the extent that structures, pipes, and appurtenances will not be floated or otherwise damaged;

3) lowering of the groundwater level within the work area without adversely affecting existing structures, utilities, pavements, sidewalks or wells outside of the Work area.

e. Submit the following in accordance with Article 1.03 Paragraph C above.

1) Plans and description of the Normal and/or Special Dewatering systems, including the number, location and depth of wells, wellpoints or sumps; designs of filters to prevent pumping of fine soil; method and location for filtering, sedimentation tanks and legal disposal of pumped water; and flow capacity of proposed system, accounting for groundwater level relative to tide cycles if applicable.

2) Design calculations, description and complete layout drawings, stamped and signed by Contractor's Dewatering Professional Engineer, at least two weeks prior to scheduled installation of Special Dewatering system

3) Locations of observation wells

4) Records of pump operation and groundwater elevations

6. Dewatering Operations and Procedures

a. Provide electrically operated dewatering equipment, powered with independent generators adequately sized to operate the dewatering system and capable of running on commercial power. Provide standby equipment independent of commercial power and provide for dewatering within 24 hours upon primary pump or power failure. No work shall be performed by the Contractor below the pre-construction groundwater level during dewatering system failure.

b. Provide suitable temporary pipes, flumes or channels for water that may flow along or across the Site of the Work.

c. Provide dewatering equipment with noise attenuation systems capable of meeting the governing noise regulation requirements.

d. Encapsulate the suction end of the pump with crushed stone, filter fabric, and other materials to minimize the amount of silt discharged to the amount allowed by the construction dewatering permit.

e. Do not operate equipment on paved surfaces to prevent damaging these surfaces.

f. Locate dewatering facilities to prevent interference with utilities and construction work to be done by others.

g. For dewatering operations with relatively minor flows, direct pump discharges using filtration bag or system per Erosion and Sediment Control below, or pump into hay bale sedimentation traps lined with filter fabric. Filter water through the hay bales and filter fabric prior to seepage into storm drainage or any natural water course.

h. For dewatering operations with larger flows, provide pump discharges into a steel dewatering/sedimentation basin. Use steel baffle plates to slow water velocities, to increase the contact time, and allow adequate settlement of sediment prior to discharge into waterways, storm drainage or discharge point allowed by the construction dewatering permit.

i. Utilize silt sacks in catch basins when excess silt is suspended in the discharge water per Erosion and Sediment Control below.

j. If siltation basin is used, size to effectively filter for the volume and discharge rate of water anticipated without overflow.

k. Provide treatment necessary to prevent discharge of silty and/or contaminated ground water caused by the Contractor's operations, or any contaminated ground water that may pass from excavated surfaces and/or through the excavation support system selected by the Contractor.

l. Dispose of water pumped or drained from the Work in accordance with permit requirements and in a manner to prevent undue interference with other work or damage to adjacent properties, pavements and other surfaces, buildings, structures and utilities.

m. Obtain necessary regulatory approvals for the disposal of dewatering flows, including, among others, approval by the Environmental Protection Agency under the National Pollutant Discharge Elimination System (NPDES) program for construction dewatering activities. Submit the completed and approved construction dewatering permit to the Engineer immediately upon receipt.

7. Special Dewatering

a. Use Special Dewatering as necessary if Normal Dewatering methods are inadequate to ensure dry and stable excavation subgrade conditions.

b. Special Dewatering techniques may consist of one- or two-stage wellpoint systems, deep wells, or eductor and ejector type systems. Design with suitable screens to prevent pumping of fines and to address specified Work Site conditions.

c. In areas requiring special dewatering, lower the groundwater level to a minimum of 2 feet below the existing fill and/or organic peat subgrades or to the excavation subgrade for organic silt/clay subgrades prior to any installation and maintain that groundwater level until the excavation has been backfilled and provide monitoring by Contractor's Dewatering Professional Engineer to ensure conformance with the requirements herein.

d. Furnish materials and install at least two observation wells at each excavation area. The location of the wells shall be proposed in the field by the Contractor's Dewatering Professional Engineer and reviewed and approved by the Engineer.

C. Erosion and Sediment Control

1. Plan and execute construction using methods to control surface drainage from cuts and fills, from borrow and waste disposal areas and prevent erosion and sedimentation.

2. Submit erosion and sediment control plan to Engineer prior to the start of construction.

3. Install erosion and sediment controls indicated on the Drawings and as required by Laws and Regulations. Install additional erosion and sedimentation control measures beyond those shown on the Drawings as necessary to stabilize the Site. Coordinate temporary erosion controls with permanent erosion controls to the extent practical. Provide and maintain devices to control erosion, siltation, and sedimentation that occur during construction operations. Undertake reasonable precautions and measures to avoid erosion of soil and to prevent silting of drainage ditches, storm sewers, rivers, streams, and lakes.

4. Employ pollution prevention measures, erosion and sedimentation control before, during, and after soils are exposed. Implement measures prior to soil disturbance or soil storage to the extent possible to ensure that such measures are in place before activity occurs and employ additional measures as the Work progresses. Implement and maintain as necessary until the Site is permanently stabilized.

5. Perform inspections of disturbed soil areas, material storage areas exposed to precipitation, and erosion control measures with Engineer a minimum of once every 14 days and also within 24 hours after any storm event greater than 0.5-inches of rainfall. Immediately correct deficiencies in the erosion control measures identified or indicated by failures or erosion by implementing additional measures or different techniques to correct and prevent subsequent erosion at no additional cost to Owner.

6. In the event that silt or debris breaches erosion control, immediately remove and clean silt or debris from drainage ditches and storm sewers and revise erosion control measures as required by the Conservation Commission or the Engineer. Should silt or debris breach erosion controls and reach rivers, streams or lakes, immediately notify local, state or Federal representatives as required and implement required remediation methods at no additional cost to Owner.

7. Limit duration of the exposure of soils on embankments, excavations, and graded areas to a minimum.

8. Provide temporary measures such as berms, dikes and drains to prevent water flow. Install erosion control measures in any ditch, swale or channel before water is allowed to flow in the waterway. Handle water pumped from trenches to minimize discharge of silty water to the maximum extent practicable.

9. Stabilize storm drain outfalls as shown on the Drawings before the discharge points become operational. Install inlet protection immediately upon construction of culverts.

10. Stabilize disturbed areas with temporary and permanent erosion control practices as soon as practicable, but no more than 14 days after construction activity on a particular portion of the Site has temporarily or permanently ceased. Exceptions to this requirement include: (1) where construction activities will resume on the particular portion of the Site within 21 days; and (2) where snow cover precludes initiation of stabilization measures.

11. Place stockpiled topsoil on the Site away from natural drainages, in piles with side slopes of 50 percent to 70 percent. Install siltation fence around the base of the pile to prevent eroding soil from washing into drainages. Cover topsoil piles which are to remain for a period of 21 days or more with temporary seed and mulch immediately following stockpiling.

12. Conduct pavement sweeping to remove sediment and soil debris accumulation on pavement resulting from construction activity

13. Siltation/Silt Fence

    a. Filter fabric: suitable for erosion control.

    b. Wood posts: oak, 2 inches by 2 inches in section, and at least 4.5 feet in length.

    c. Erosion control fencing: heavy-duty filter fabric towed into the existing soil as shown on the Drawings.

    d. Construct as shown on Drawings or as directed by Engineer. Install parallel to contours where possible, prior to Site clearing and grading activities.

        1) Dig a 6 inch by 6 inch minimum trench where the fence is to be installed. Position the fence in the trench with the fence posts set at 8 feet on center (maximum). Curve ends of fence uphill to prevent flow around ends.

        2) Staple sedimentation control fabric and the industrial netting to each post. When joints are necessary, splice filter fabric together only at support posts with 6-inch overlap and securely seal.

        3) Bury lower edge of fabric at least 6 inches below ground surface to prevent underflow. Backfill trench and compact soil over filter fabric.

        4) Installed height: minimum 2.5 feet and 36 inches maximum.

        5) Inspect frequently; repair or replace any damaged sections.

14. Temporary Erosion Control Matting

a. Rolled matting blanket consisting of curled wood excelsior, coconut fiber, straw or paper bound with a weave of twisted craft paper, cotton cord or plastic mesh.

b. Provide staples for fastening matting to the ground. Staples: fabricated in a "U" shape from 11 gage or heavier stiff steel wire, 6 to 12 inches in length and 1 to 2 inches across.

c. Surface Preparation and Installation

1) Conform to grades and cross sections for slopes and ditches shown on the Drawings. Finish to a smooth and even condition with all debris, roots, stones, and lumps raked out and removed. Loosen soil surface to permit bedding of the matting.

2) Unless otherwise directed, apply seed prior to placement. When directed, spread additional seed over matting, particularly at those locations disturbed by building slots. Press matting onto the ground with a light lawn roller or by other similar means.

3) Bury edges of matting around the edges of catch basins and other structures.

15. Seeding

a. Select seed variety and applied rates based upon the date of application per the following table. Equivalent seed mixture based on suitability for use in controlling erosion of the various soil types and slopes may be used as approved by the Engineer.

Dates	**Seed**	**Applied Rate (pounds per 1,000 feet^2)**
4/1 to 7/1 8/15 to 9/15	Oats	1.8
4/1 to 7/1	Annual Ryegrass	0.9
5/15 to 8/15	Sundangrass	0.9
9/15 to 10/15	Winter Ryegrass	2.6

1) Sow seed at the rates indicated, on the pure live seed basis.

2) Mulch areas where temporary seeding has been applied. Do not mulch seeded areas where matting will be immediately installed. If temporary seeding does not achieve adequate growth by November 1, apply an additional layer of mulch.

3) Mulch temporarily or permanently seeded areas, areas which cannot be seeded within the recommended seeding dates, and any soil stockpile areas, immediately following seeding. Straw or hay mulch, wood fiber mulch, and hydromulch are recommended.

16. Sod: grown from certified seed of adapted varieties to produce high quality sod free of any serious thatch, weeds, insects, diseases and other pest problem, be at least one year old and not older than three years, and cut with a 1/2 inch to 1 inch layer of soil.

a. Lay sod strips on the prepared soil, perpendicular to the slope or direction of water flow, starting at the lowest elevation. Butt the edges and ends of the sod strips together and tamp or roll. Stagger joints.

b. Staple sod strips at ends and at 3-foot intervals along the center of the strip.

c. Irrigate sodded area immediately after installation.

17. Catch Basin Silt Sacks

a. Style: Silt Sack Regular Flow.

b. Test Method: ASTM D-4884 165.0 lbs./inch.

c. Silt sack seams: certified average wide width strength.

d. Meet the following ASTM D-4884 standards. Properties are Minimum Average Roll Values (MARV).

Property	Test Method	Units	Test Results
Grab Tensile	ASTM D-4632	lbs.	315x300
Grab Elongation	ASTM D-4632	%	15x15
Puncture	ASTM D-4833	lbs.	125
Mullen Burst	ASTM D-3786	P.S.I.	650
Trapezoid Tear	ASTM D-4533	lbs.	120x150
UV Resistance	ASTM D-4355	%	90
Apparent Opening	ASTM D-4751	US Sieve	40
Flow Rate	ASTM D-4491	Gal/Min/ feet ^{2}	40
Permittivity	ASTM D-4491	sec -1	0.55

1) Utilize silt sacks in catch basins as required when excess silt is suspended in discharge water.

18. Filtration Bag or System for Discharge from Trench Dewatering

    a. Meet the following standards. Properties are Minimum Average Roll Values (MARV).

Property	Test Method	Units	Test Results
Flow Rate	ASTM D-4491	Gal/Min/ feet ^{2}	40
Permittivity	ASTM D-4491	sec -1	0.55

    b. For discharge from trench dewatering, install filtration bag or system or dewatering siltation basin constructed of a hay bale barrier lined with filter fabric sized to handle the volume of dewatering without overflowing.

19. Compost Filter Socks

    a. Furnish and install biodegradable mesh “socks” filled with mature, clean compost per EPA National Pollutant Discharge Elimination System (NPDES) specifications.

        1) Install per EPA and manufacturers recommendations.

        2) Install parallel to contours where possible. Stake socks as needed to stabilize. Inspect frequently and repair as necessary.

20. Provide detention basins or water filtration systems for dewatering and coordinate locations with Engineer. See Dewatering in Article 3.03 Paragraph B. above.

21. Other Temporary Measures

    a. Provide and maintain temporary slope drains as required.

    b. Employ other temporary erosion control measures as directed by the Engineer or local Conservation Commission.

22. Maintenance

    a. Inspect erosion control practices immediately after each rainfall and at least daily during prolonged rainfall or snowmelt for damage. Make appropriate repairs or replacement until Final Completion at no additional cost to the Owner.

b. Remove silt from siltation fence and/or haybale when it has reached one-quarter of the bale and/or fence height, or prior to expected heavy runoff or siltation.

c. Repair matting if any staples become loosened or raised, or if any matting becomes loose, torn, or undermined, make satisfactory repairs immediately.

d. Maintain areas mulched or matted until Final Completion, at no additional cost to the Owner.

e. Maintain sediment basins by removing silt that reaches a depth of over one foot, at no additional cost to the Owner, until Final Completion.

23. Removal of Temporary Erosion Control

a. Remove temporary materials and devices upon completion of the Work when permanent soil stabilization has been achieved. Re-use materials in good condition if approved by Engineer.

1) If silt socks are used, remove in paved areas or cut open and disperse media in unpaved areas.

b. Level and grade to preconstruction conditions and to the extent required to prevent any obstruction of the flow of water or any other interference with the operation of or access to the permanent works.

c. Remove siltation fences only when adequate grass growth has been established.

d. Repair areas damaged by silt fences and hay bales to preconstruction conditions to the satisfaction of the local Conservation Commission and the Engineer.

e. Remove unsuitable materials from Site and dispose of in a lawful manner.

D. Noise Control

1. Provide methods, means, and facilities to minimize noise from construction operations.

2. Provide noise attenuation systems capable of meeting the Department of Environmental Protection Division of Air Quality Control regulations governed by the following policy:

   "*A source of sound will be considered to be violating the Department's noise regulation (310 CMR 7.10) if the source:*

   - *Increases the broadband sound level by more than 10 dB(A) above ambient, or*
   - *Produces a "pure tone" condition when any octave band center frequency sound pressure level exceeds the two adjacent center frequency sound pressure levels by 3 decibels or more.*

   "These criteria are measured both at the property line and at the nearest inhabited residence. Ambient is defined as the background A-weighted sound level that is exceeded 90% of the time measured during equipment operating hours. The ambient may also be established by other means with the consent of the Department."
3. Construct sound enclosures or utilize other noise reduction techniques if the equipment does not meet the noise level requirements.

E. Pollution Control

1. Provide methods, means, and facilities to prevent contamination of soil, water, and atmosphere from discharge of noxious, toxic substances, and pollutants produced by construction operations.

   a. Water Pollution Control

      1) Assure that sediment, debris, petroleums, chemicals, or other contaminants will not enter existing drainage facilities and channels. Use construction methods that will prevent entrance of pollutants and wastes into existing streams, rivers, lakes, and flowing and dry watercourses.

      2) Obtain legal disposal sites and dispose of pollutants and wastes in a legal manner.

      3) Respond immediately to emergencies as directed when water quality of existing streams, rivers, lakes and flowing and dry watercourses is threatened. Take corrective action to remove or contain pollutants until a permanent solution is determined.

b. Air Pollution Control

1) Equipment and vehicles that exhibit excessive exhausts emissions due to poor engine adjustments or inefficient operation will not be permitted to operate until corrective repairs or adjustments are made.

2) Burning of materials from clearing or grubbing operations, combustible construction materials, and rubbish will not be allowed.

F. Traffic Regulation

1. Control and maintain traffic within the Project area. Submit traffic control plans and coordinate with Owner and local agencies. Submit plan for traffic control to Owner for review 14 days in advance of any Work within public right-of-way, street closure or detour. Contractor shall adjust traffic controls as directed by Owner or Engineer at not additional cost.

2. Provide and maintain traffic control and maintenance devices in accordance with Part 6, Temporary Traffic Control, of the "*Manual on Uniform Traffic Control Devices for Streets and Highways*", published by the U.S. Department of Transportation, Federal Highway Administration and other applicable codes and standards as specified. Operate devices 24 hours per day as required.

3. Provide for access by emergency vehicles, such as police, fire, and disaster units at all times. Contractor shall be liable for damages resulting from failure to provide such access.

4. During construction hours, traffic flow must be controlled by uniformed traffic police officers. The services of uniformed traffic police officers shall in no way relieve the Contractor of its responsibilities under the Contract.

5. Maintain minimum of one moving lane on roadways at all times.

a. Where detours are permitted, provide necessary barricades, flashers, flashing arrows and signs in accordance with referenced Manuals and Laws and Regulations.

b. Provide gravel borrow and bituminous concrete to maintain temporary passable travel lane ramps, temporary bridging, steel plates, temporary pavement, wood-framed walkways, caution, safety and other necessary signs directing the pedestrian and vehicular traffic towards unblocked and safe areas.

6. Provide safe access/egress to businesses and abutting property owners within the Project area. In areas where the construction activity is in progress, install directional signs in front of businesses indicating "OPEN FOR BUSINESS" or similar for guidance of customers.

    a. Certain construction operations such as utility work and roadway/sidewalk reconstruction may restrict access/egress on some roads and to businesses and abutting property owners. Under these circumstances, schedule operations during off-peak hours or late evenings with Owner approval so that a particular work activity can be completed in the shortest possible time.

    b. Provide 48 hours' notice to businesses and abutting property owners when access/egress will not be available or restrictions will exist.

7. Exercise particular care to establish and maintain such methods and procedures that will not create hazards.

    a. Remove or properly cover traffic control, safety devices and/or signs having messages that are irrelevant to normal traffic conditions at the end of each Work period. Keep signs are to be kept clean at all times and provide that legends are distinctive and unmarred.

    b. Place excavated material and construction equipment so that vehicular and pedestrian traffic is maintained at all times unless road closure permit is obtained. If the Contractor's operations cause traffic hazards, implement appropriate safety measures immediately.

    c. In areas of high pedestrian and vehicular traffic volume, the remove waste materials and construction equipment from the Work Site on a daily basis. Do not park construction equipment overnight on the Site or the adjacent roads unless permitted by Owner.

    d. Provide night watchmen where special hazards exist.

8. Post signage clearly stating that any vehicle impeding the progress of construction will be towed at the vehicle owner's expense. Towing charges incurred by Owner for Contractor's failure to post such signs will be borne by the Contractor.

3.04 REMOVAL OF TEMPORARY UTILITIES, FACILITIES, AND CONTROLS

A. Remove temporary utilities, equipment, and facilities before Final Application for Payment inspection.

B. Remove temporary underground installations and grade Site as indicated. Clean and repair damage caused by installation or use of temporary utilities, facilities, and controls.

C. Restore existing facilities and areas used during construction to original condition. Restore permanent facilities used during construction to specified condition.

3.05 OVERALL EXECUTION REQUIREMENTS

A. Coordination

1. Conduct preconstruction and pre-installation meetings before commencing certain Work that requires coordination or has special requirements or approvals in accordance with Article 1.03 Paragraph A.

2. Coordinate space requirements and installation of Work. Utilize spaces efficiently to maximize accessibility for other installations, maintenance, and repairs.

3. Coordinate Work of the various Specifications with interdependent responsibilities for installing, connecting to, and placing in service, operating equipment.

4. Coordinate related Work at the Site in accordance with Article 7 of the Standard General and Supplementary Conditions and Additional Supplementary Conditions.

5. Coordinate completion and cleanup of Work of separate sections in preparation for Substantial Completion and for portions of Work designated for Owner's partial occupancy.

6. After Owner occupancy of premises, coordinate access to Site for correction of defective Work and/or incomplete Work to minimize disruption of Owner's activities.

7. See other coordination requirements in **Specific Project Requirements and Procedures.**

B. Existing Conditions

1. See details in **Specific Project Requirements and Procedures**.

2. Existence and location of underground and other utilities and construction indicated as existing are not guaranteed. Before beginning Work investigate and verify the existence and location of underground utilities and other utilities and construction.

3. Beginning Work means acceptance of existing conditions.

C. Field Engineering

1. Prior to initiating construction, engage an independent professional land surveyor registered in the state where the Project is located to provide surveys and permanent reference points for all bounds and property markers along the line of the Work that may be disturbed during construction. Submit copies of all ties to the bounds and property markers to the Engineer prior to excavation at the Site(s).

2. Maintain surveyor's log of control and other survey work. Keep log available for reference.

3. Verify layout information shown on the Drawings in relation to existing benchmarks before lay out of the Work. Locate and protect existing benchmarks and control points. Preserve permanent reference points during construction.

4. Promptly report lost or destroyed reference points, benchmarks, or control points. Promptly report requirements relocate reference and control points due to changes in grades. Promptly replace lost or destroyed bounds or markers and control points based on the original survey control points utilizing the services of a professional land surveyor registered in the state where the Project is located. The cost of replacing markers disturbed by the Contractor's operations shall be at the Contractor's expense.

D. Record Documents

1. Provide Record Documents in accordance with Paragraph 6.12 of the Standard General and Supplementary Conditions and Additional Supplementary Conditions and Article 1.03 subparagraph C.6.

2. Store Record Documents separate from documents used for construction. Record information concurrent with construction progress.

3. Legibly mark each item to record description of actual equipment and material installed and actual construction on approved submittals, including the following.

   a. Manufacturer's name and equipment and material model and number

   b. Material and equipment substitutions or alternates utilized

   c. Approved changes

   d. Measured depths of foundations

   e. Measured horizontal and vertical locations of underground utilities and appurtenances, referenced to permanent surface improvements

   f. Measured locations of internal utilities and appurtenances concealed in construction, referenced to visible and accessible features of the Work

   g. Field changes of dimension and detail

   h. Details not on original Contract Documents or Shop Drawings

4. Submit final record documents as specified in Article 1.03 Paragraph C.6.

E. Cutting and Patching

1. Employ skilled and experienced personnel to perform cutting and patching.

2. Submit written request in advance of cutting or alteration which affects:

   a. structural integrity of any element of Project;

   b. integrity of weather exposed or moisture resistant elements;

   c. efficiency, maintenance, or safety element;

   d. safety, traffic, or hazard barriers;

   e. visual qualities of sight exposed elements; and

   f. work of Owner or separate contractor.

3. Execute cutting, fitting, and patching including excavation and fill to complete Work and to:

   a. fit materials together, to integrate with other work;

   b. uncover Work to install ill-timed Work;

   c. remove and replace defective or non-conforming Work;

   d. remove Samples of installed Work for testing when requested; and

   e. provide openings in element of Work for penetration of mechanical and electrical work.

4. Execute Work by methods to avoid damage to other work and which will provide appropriate surfaces to receive patching and finishing.

5. Provide adequate temporary support for Work to be cut.

6. Restore Work with new materials in accordance with requirements of Contract Documents. Use materials identical with original materials where recognized that satisfactory results can be produced.

7. Provide protection from elements for areas which may be exposed by uncovering work.

8. Refinish surfaces to match adjacent finishes. For continuous surfaces, refinish to nearest intersection or natural break. For an assembly, refinish entire unit. Restore exposed finishes of patched areas; and, where necessary extend finish restoration onto retained adjoining Work in a manner, which will eliminate evidence of patching.

9. Identify any hazardous substance or condition exposed during the Work to Owner for decision or remedy in accordance with Paragraph 4.04 of the Standard General and Supplementary Conditions and Additional Supplementary Conditions.

10. Cut work by methods least likely to damage Work to be retained and work adjoining. Cut Work with sawing and grinding tools, not with hammering, chopping, or burning tools. Cut masonry and concrete materials with masonry saw or core drill. Do not use pneumatic tools without prior approval. Core drill openings through concrete Work. Adhere to mandatory cutback requirements when saw cutting concrete and roadway openings.

11. Do not cut and patch structural Work in a manner resulting in reduction of load-carrying capacity or load/ deflection ratio.

12. Fit Work tight to pipes, sleeves, ducts, conduit, and other penetrations through surfaces. Maintain supports to ensure structural integrity of the Work. Provide devices and methods to protect other portions of Project from damage and seal voids. For interior work at penetrations of fire rated walls, partitions, ceiling, or floor construction, completely seal voids with fire resistant material, to full thickness of the penetrated element.

13. Do not cut and patch operational or safety-related components that reduce capacities to perform in manner intended. Do not cut and patch Work that reduces visual qualities. Remove and replace unsatisfactory cutting patching as directed by Engineer or Owner.

F. Electrolytic Corrosion Prevention

1. Prevent galvanic action, bimetallic corrosion, anodic or cathodic action, and electrolysis at all electrical grounds and for all galvanic scale (electromotive series or table of oxidation potentials). Do not allow contact of dissimilar metals further apart than 0.35 on the galvanic scale (electromotive series or table of oxidation potentials). The electrode potential of common metals is listed below.

	Electrode Potential Volts (Relative to Hydrogen)
Magnesium	+2.37
Aluminum	+1.70
Zinc+	+0.76
Chromium	+0.56
Iron and Steel	+0.44
Cadmium	+0.40
Nickel	+0.25
Tin	+0.14
Lead	+0.13
Copper	-0.34

2. Unless otherwise indicated, provide dielectric insulators between ferrous and nonferrous pipe and equipment.

G. Quality Assurance and Control of Installation

1. Monitor quality control of Subcontractors, Suppliers, manufacturers, material, equipment, services, Site conditions, and workmanship, to produce Work of specified quality. Conduct field quality control and testing specified.

2. Comply fully with manufacturers' installation instructions, including each step in sequence. If manufacturers' instructions conflict with Contract Documents, request clarification from Engineer before proceeding.

3. Comply with specified standards as a minimum quality for the Work except when more stringent tolerances, codes, or specified requirements indicate higher standards or more precise workmanship.

4. Perform Work using persons qualified to produce workmanship of specified quality.

5. Install field Samples and mockups at the Site as required in Specifications for review. Acceptable Samples and mockups represent a quality level for the Work. Where field Sample or mockup is specified to be removed, clear area after field Sample or mockup has been accepted by Engineer or after Work is complete when mockup is to serve as a control reference.

6. Protect adjacent construction in accordance with Paragraph 6.11 of the Standard General and Supplementary Conditions and Additional Supplementary Conditions.

H. Manufacturers' Field Services

1. If required in the Specifications, arrange and pay for material or equipment Suppliers or manufacturers to provide qualified staff personnel (field representative) to perform the following services and services specified. Submit reports of activities, actions taken and test results to Engineer within 10 days of completion in accordance Article 1.03 Paragraph C above.

a. Observe Site conditions, conditions of surfaces and installation, quality of workmanship.

b. Report observations and Site decisions or instructions given to applicators or installers that are supplemental or contrary to manufacturers' written instructions.

c. Assist with field assembly as required.

d. Furnish, setup, and operate required test equipment and facilities.

e. Perform and record results of manufacturer recommended inspections and tests, and tests specified for material and equipment.

f. Be responsible for protection of material and equipment and safety of all personnel during testing.

g. Perform any other services normally provided by field representative's company.

h. Instruct operating personnel in proper use of material and equipment.

i. Instruct and supervise field repairs before acceptance by Owner.

I. Independent Testing

1. Employ and pay for specified services of an independent firm in accordance with Paragraph 13.03 of the General Conditions and Supplementary Conditions to perform inspection and testing as may be specified.

2. Reports will be submitted by the independent firm to Owner, in duplicate indicating observations and results of tests and indicating compliance or noncompliance with Contract Documents.

3. Inspection, testing, and source quality control may occur on or off the Project Site.

4. Cooperate with independent firm. Furnish samples of materials, design mix, equipment, tools, storage and assistance as requested.

5. Notify Owner and independent firm 24 hours before expected time for operations requiring services.

6. Make arrangements with independent firm and pay for additional Samples and tests required for Contractor's use.

7. Retesting required because of nonconformance to specified requirements will be performed by the same independent firm if instructed by Owner. Payment for retesting will be charged to Contractor by deducting inspection or testing charges from the Contract Price.

8. Testing or inspecting does not relieve Contractor from performing Work in accordance with requirements of the Contract Documents.

3.06 STARTUP, TESTING, AND COMMISSIONING

A. Spare Parts

1. Provide spare parts required for construction, startup, testing and commissioning of the Work prior to achievement of Substantial Completion, including spare parts for flushing and consumable supplies such as bolts, nuts, gaskets, filters, insulating tape, etc., normally consumed in the construction, commissioning and testing.

2. If spare parts are purchased by Owner, Contractor shall have the right to use the spare parts purchased by Owner provided that such spare parts are replaced prior to Substantial Completion at Contractor’s expense. Replacement spare parts, replaced by Contractor, shall be new, unused and identical as the original spare part used.

B. Consumables

1. Provide initial fills of consumables including equipment lubricants, resins, chemicals, desiccants, and fuels. Provide subsequent fills if required during Warranty Period if acts or omissions of Contractor cause such consumables to require replacement.

2. Coordinate with Owner for consumables required.

C. Checkout and Starting Systems

1. Coordinate schedule for startup and operation of various equipment and systems with Owner.

2. Notify Owner 7 days before startup of each major piece of equipment or system, including a staffing request for Owner's operations and maintenance personnel required to adequately and safely support each specific start-up and operation activity.

3. Verify that each system or piece of equipment item has been assembled, constructed, or completed in accordance with the Contract and capable of functioning as intended.

4. Verify that each piece of equipment or system has been checked for proper lubrication, drive rotation, magnetic center alignment, belt tension, control sequence, or other conditions which may cause damage.

5. Verify that each piece of equipment or system has successfully completed construction testing and cold commissioning, including hydrostatic testing, loop checks, relay checks, calibration, and continuity checks and that all tests, meter readings, and specified electrical characteristics agree with those required by the equipment or system manufacturer.

6. Verify wiring and support components for equipment are complete and tested.

7. Execute start up under supervision of responsible manufacturers' representative or Contractor's personnel in accordance with manufacturers' instructions utilizing Owner's qualified operations and maintenance staff trained by Contractor.

8. When specified in individual Specification Sections, require manufacturer to provide field representative to be present at Site to inspect, check and approve equipment or system installation before start up, and to supervise placing equipment or system in operation.

D. Starting, Adjusting, and Balancing

1. Supply necessary equipment, material, construction power, and consumables (except for those provided by Owner) needed to startup and fully test the Work and replenish the same until Substantial Completion is achieved. Contractor may utilize Owner's operating spare parts, such use requiring timely replacement at Contractor's expense.

2. Coordinate as required for conduct of independent testing.

3. Perform specified and required adjusting and balancing concurrently to the maximum extent possible on individual equipment and systems and prior to startup and commissioning/performance testing.

E. Startup and Commissioning/Performance Testing

1. Conduct startup and commissioning/performance tests to demonstrate the Work meets the requirements of the Contract Documents, satisfies the Owner's requirements, and is in accordance with Paragraph 14.04. of the Standard General and Supplementary Conditions and Additional Supplementary Conditions. Conduct testing in accordance with the separate Startup and Commissioning section, if included.

2. Prepare and submit a written startup and commissioning/performance testing procedures no later than 60 days prior to start of testing for review and final test procedures no later than 30 days prior to start of testing. Submit a staffing request for Owner's operations and maintenance personnel.

3. Calibrate test equipment and instrumentation on Site or provide acceptable certificate of calibration conducted within 30 days of testing.

4. Complete functional testing prior to initiating the startup and commissioning/performance testing as specified.

5. Complete specified startup and commissioning/performance tests prior to Substantial Completion. Owner and Engineer will witness Performance Testing. Notify Owner and Engineer in writing at least 7 days prior to starting any startup and commissioning/performance testing. Coordinate for witnessing of tests by required regulatory representatives.

6. Submit written test reports per Article 1.03 Paragraph C.6 and D.

F. Demonstration and Training

1. Provide formal demonstration and training of Owner's personnel as specified in individual Specification sections, in accordance with the separate Demonstration and Training section (if any), or per **Specific Project Requirements and Procedures**.

3.07 ATTACHMENTS

A. Transmittal form

END OF SECTION

TRANSMITTAL FORM

Owner:		Transmittal No.:	
Project:		Date:	
Contract No.:			
Contract Title:			
Specification Section No.:			

Assign a consecutive, unique number to each submittal and use same on resubmittals. For "Revision", A =original submittal; B = 1st resubmittal; C (and beyond) = additional resubmittals

Submittal (Item) No.	Revision (A B C etc.)	Date	Title/Description	Vendor/Manufacturer	Copies

☐ The material and equipment, and requirements for construction/installation contained in Submittal No.(s) _____ have been reviewed and we certify that they are correct and in strict conformance with the requirements specified (no exceptions or deviations)

☐ The material and equipment and requirements for construction/installation contained in Submittal No.(s) _____ have been reviewed and we certify that they are correct and in strict conformance with the requirements specified except for the following deviations (list below or attach listing):

_____

_____

CONTRACTOR'S NAME_____

ADDRESS_____

BY: _____ DATE: _____

This page intentionally left blank

SECTION 01 11 00

SUMMARY OF WORK

PART 1 – GENERAL

1.01 SECTION INCLUDES

A. Project Description

B. Description of the Work

C. Work Sequence and Coordination

D. Special Requirements

1.02 PROJECT DESCRIPTION

A. The Atlantic Middle School Campus Improvement Project consists of, but is not limited to, construction of vehicular access and parking facilities and drainage infrastructure construction and repairs. The Work includes realignment of driveway access; removal and expansion of parking lot; installation of drainage structures, open cut removal & replacement or new installation of approximately 500 linear feet of drainage pipe, installation of a subsurface stormwater mitigation facility; excavation and grading of surface stormwater mitigation facility; curb installation and curb removal and reset; sidewalk removal and replacement; fence removal and replacement; structural restoration & modification of exterior concrete stairs, vegetative plantings, temporary bypass pumping; plugging of flows; appurtenances; excavation, trench support; backfilling; restoration; paving; environmental protection; and all materials, equipment, services and construction inherent to the Work.

1.03 DESCRIPTION OF THE WORK

A. The Work includes labor, material and equipment, services required for construction, testing, and commissioning of the Project in accordance with the Contract Documents and as more specifically described in the Specifications and Drawings and includes, but is not limited to, the following principal features:

- Site demolition & restoration
- Excavation
- Drainage structure and conduit installation
- Drainage structure modifications/adjustments
- Installation of sidewalks
- Installation of curb
- Relocation of existing utilities to facilitate drainage work

- Grading
- Paving
- Structural restoration & modification of exterior concrete stairs and handrails
- Vegetative plantings

B. Work Site locations: generally as shown on the Drawings.

1. The Atlantic Middle School Campus Improvement Project Work consists of site improvements and drainage repairs located in the public right-of-ways of Hollis Avenue and within portions of City own properties.

C. Existing conditions and Site data: per the Drawings and Section 01 15 00.

1.04 WORK SEQUENCE AND COORDINATION

A. The Work will not extend over more than one construction season and must be sequenced to limit impacts to the City, school and neighborhood areas from construction.

B. Work shall be performed from 7:30 AM to 3:30 PM, Monday through Friday, excluding holidays unless otherwise approved by Owner.

C. Coordinate all work with Quincy Department of Parks & Forestry, Public Works, Quincy Police Department for traffic control, Quincy School Department and Engineer.

D. Mobilization and construction shall not occur prior to the school summer recess on June 24. 2014.

E. All construction activities and restorations shall be Final complete and contractor de-mobilized from the site prior to on August 31, 2014 prior to the beginning of the 2014-15 school year.

1.05 SPECIAL PROJECT REQUIREMENTS

A. Coordinate permitting through the City Engineer's office to obtain required permits and those as may be referenced in Sections 00 73 10 and 01 15 00.

B. Maintain roads/sidewalks, utilities and other public amenities for convenience, safety and safe access to businesses and abutters at all times during execution of the Work and during periods of no construction activity until Project completion.

PART 2 PRODUCTS - NOT USED

PART 3 EXECUTION - NOT USED

END OF SECTION

SECTION 01 11 00

SUMMARY OF WORK

PART 1 – GENERAL

1.01 SECTION INCLUDES

A. Project Description

B. Description of the Work

C. Work Sequence and Coordination

D. Special Requirements

1.02 PROJECT DESCRIPTION

A. The Atlantic Middle School Campus Improvement Project consists of, but is not limited to, construction of vehicular access and parking facilities and drainage infrastructure construction and repairs. The Work includes realignment of driveway access; removal and expansion of parking lot; installation of drainage structures, open cut removal & replacement or new installation of approximately 500 linear feet of drainage pipe, installation of a subsurface stormwater mitigation facility; excavation and grading of surface stormwater mitigation facility; curb installation and curb removal and reset; sidewalk removal and replacement; fence removal and replacement; structural restoration & modification of exterior concrete stairs, vegetative plantings, temporary bypass pumping; plugging of flows; appurtenances; excavation, trench support; backfilling; restoration; paving; environmental protection; and all materials, equipment, services and construction inherent to the Work.

1.03 DESCRIPTION OF THE WORK

A. The Work includes labor, material and equipment, services required for construction, testing, and commissioning of the Project in accordance with the Contract Documents and as more specifically described in the Specifications and Drawings and includes, but is not limited to, the following principal features:

- Site demolition & restoration
- Excavation
- Drainage structure and conduit installation
- Drainage structure modifications/adjustments
- Installation of sidewalks
- Installation of curb
- Relocation of existing utilities to facilitate drainage work

- Grading
- Paving
- Structural restoration & modification of exterior concrete stairs and handrails
- Vegetative plantings

B. Work Site locations: generally as shown on the Drawings.

1. The Atlantic Middle School Campus Improvement Project Work consists of site improvements and drainage repairs located in the public right-of-ways of Hollis Avenue and within portions of City own properties.

C. Existing conditions and Site data: per the Drawings and Section 01 15 00.

1.04 WORK SEQUENCE AND COORDINATION

A. The Work will not extend over more than one construction season and must be sequenced to limit impacts to the City, school and neighborhood areas from construction.

B. Work shall be performed from 7:30 AM to 3:30 PM, Monday through Friday, excluding holidays unless otherwise approved by Owner.

C. Coordinate all work with Quincy Department of Parks & Forestry, Public Works, Quincy Police Department for traffic control, Quincy School Department and Engineer.

D. Mobilization and construction shall not occur prior to the school summer recess on June 24. 2014.

E. All construction activities and restorations shall be Final complete and contractor de-mobilized from the site prior to on August 31, 2014 prior to the beginning of the 2014-15 school year.

1.05 SPECIAL PROJECT REQUIREMENTS

A. Coordinate permitting through the City Engineer's office to obtain required permits and those as may be referenced in Sections 00 73 10 and 01 15 00.

B. Maintain roads/sidewalks, utilities and other public amenities for convenience, safety and safe access to businesses and abutters at all times during execution of the Work and during periods of no construction activity until Project completion.

PART 2 PRODUCTS - NOT USED

PART 3 EXECUTION - NOT USED

END OF SECTION

SECTION 01 15 00

SPECIFIC PROJECT REQUIREMENTS AND PROCEDURES

The following supplement or modify the requirements and procedures of Section 01 00 10 using the same Article heading to which the supplement or modification applies.

1.02 PRICE AND PAYMENT PROCEDURES

A. Pursuant to Paragraph B, payment for uniformed traffic police officers will be paid on the basis of the actual hours worked and paid by the Contractor as verified by the Resident Project Representative. The invoiced amounts paid may include standard administrative charges levied by the Police Department. Additional mark-up of police details invoices shall not be allowed.

B. Submit the following with Applications for Payment for Traffic Police Details. Failure to include this information and a proof of payment may result in non-payment of invoiced amount.

1. Receipts of invoices paid (include copy of cashed check paid to police), clearly showing:

a. the project name;

b. the officer's name;

c. location of assignment;

d. date of assignment;

e. hours of assignment; and

f. number of hours being invoiced.

C. Pursuant to Paragraph C, the City’s Change Order/Amendment form (C-006363A) shall also be used.

D. Pursuant to Paragraph D, Measurement and Payment Requirements, see Section 01 20 25 for Measurement and Payment for this Project.

1.03 ADMINISTRATIVE REQUIREMENTS

A. Pursuant to Paragraph A, Project Management and Coordination,

1. and per subparagraph 1., the Project contact list will be distributed at the preconstruction meeting.

2. and per subparagraph 4, identify documents and items for the Project as follows:

Atlantic Middle School Campus Improvement Project

3. and per subparagraph 7.a, Progress Meetings, biweekly, or as necessary, progress meetings will be held for this Project.

B. Pursuant to Paragraph B, Documentation of Progress,

1. and per subparagraph 3, provide construction photographs prior to start of construction to establish pre-construction conditions and to show progress in accordance with subparagraph 3.b.

C. Pursuant to Paragraph C, Submittal Procedures,

1. and per subparagraph C.1, address submittals as follows:

Engineer:

Woodard & Curran
95 Cedar Street, Suite 100
Providence, RI 02903
Attn: R.J. Dowling
1-800-985-7897 rdowling@woodardcurran.com

Owner:

City of Quincy Department of Park & Forestry
One Merrymount Parkway
Quincy, MA 02169
Attn: Executive Director Christopher Cassani
617 376-1253

2. Per subparagraph 5.f, Shop Drawings, submit 3 prints and electronic files in “PDF” by email.

3. Per subparagraph 6.a, As-Builts for Material and Equipment, submit 3 prints and electronic files in “.DWG” and “PDF” by email.

4. Per subparagraph 6.b, Conformed to Construction Record Drawings, submit 3 prints and electronic files in “.DWG” and PDF by email for Engineer’s use in preparing final Record Drawings.

D. Pursuant to subparagraph D.1, achievement of Substantial Completion shall also require restoration of the Project Site to the satisfaction of the Owner and Engineer.

1.04 QUALITY REQUIREMENTS

A. Pursuant to Paragraph A, Reference Standards, comply with the Massachusetts Department of Transportation - Highway Division's (referred to as "MassDOT") Construction Specifications (including Interim Supplemental Specifications and Supplemental Specifications), Construction Details (including Standard Drawings), and Design Guides as incorporated into the Specifications and Drawings, and as may be modified therein or superseded by the Owner's requirements through the direction of the Engineer.

1. Specific sections of the MassDOT documents are referenced in the Specifications and Drawings. References to "Department" in the MassDOT documents shall mean Owner or Resident Project Representative for this Project.

2. See MassDOT Highway Division website for referenced documents listed in Attachment A to this Section.

www.massdot.state.ma.us/highway/DoingBusinessWithUs/ManualsPublicationsForms

B. Comply with the requirements of the Quincy Code of Ordinances and Zoning Code portions of which are included in Section 00 73 10.

PART 2 – PRODUCTS

2.02 PRODUCT REQUIREMENTS

A. Pursuant to Paragraph A, General,

1. The definition of "material" also includes that defined in Section 00 73 73.

PART 3 – EXECUTION

3.01 TEMPORARY CONSTRUCTION FACILITIES

A. Pursuant to Paragraph F, Parking,

1. Parking areas are not to be constructed on-Site for the Project.

2. Prohibit personal vehicle parking on existing pavements and sidewalks within the Project Site.

B. Pursuant to Paragraph G, Field Offices, delete this paragraph in its entirety as field offices are not required.

C. Pursuant to Paragraph H, Staging Area, delete this paragraph in its entirety as a staging area is not provided.

D. Pursuant to Paragraph I, Project Identification, provide one 4-foot by 8-foot Project with verbiage as directed and approved by the City DPW.

3.02 TEMPORARY UTILITIES

A. Pursuant to Paragraphs A and B regarding electricity and phone services, delete these paragraphs in their entirety

B. Pursuant to Paragraph D, provide lighting as required for construction operations only.

3.03 TEMPORARY CONTROLS

A. Pursuant to Paragraph C, Erosion and Sediment Control,

1. subparagraph 2, coordinate plan with the requirements indicated in the Drawings.

2. subparagraph 23.c regarding Removal of Temporary Erosion Control, adequate grass growth for this Project is specified as minimum of 3-inches in height.

B. Pursuant to Paragraph F, Traffic Regulation,

1. subparagraph 1,

a. Include suggested construction staging, pertinent traffic control, and sign placement and sign size sketches showing the proposed sign setups intended for necessary traffic control and protection during the progress of the Work in the traffic control plan to be submitted to the Engineer and subject to approval of the City Traffic Engineer.

b. Detours and street closures are subject to the approval of the City Traffic Engineer who will strictly control the periods when traffic is being detoured or streets can be closed.

2. subparagraph 2, also comply with applicable portions of the "*Massachusetts Amendments to the 2009 Manual on Uniform Traffic Control Devices and the Standard Municipal Traffic Code*" published by the Massachusetts Department of Transportation Highway Division (referred to as "Mass Amendments").

3. subparagraph 4, comply with the relevant provisions of Section 7.00 of the MassDOT Standard Specifications and Supplements, and the following:

   a. The intent of posting police details is to ensure public safety and protection of property through appropriate traffic control. Police personnel are not to be employed as watchmen to protect the Contractor's equipment and materials.

   b. All uniformed traffic police personnel required for traffic control for construction shall be authorized by the Department of Public Work's Safety Officer and/or the Engineer.

   c. No payment will be made for personnel other than uniformed traffic police, nor will payment be made for uniformed traffic police not approved by the Engineer.

   d. Submit a forecast weekly traffic police detail schedule, at least 72 hours prior to the start of the Work describing: the nature and location of the Work, the number of police personnel, the estimated number of police hours required for each location, and justification for each uniformed officer being requested. All payment to the police for work under this Contract shall be in accordance with the Massachusetts General Laws, Chapter 149, Section 34B, which states that reserve police officers shall receive the same prevailing wage rate as paid to regular police officers.

   e. While scheduling Work in areas where uniformed traffic police is required, take into consideration that uniformed police are paid for a four-hour minimum. If uniformed police have been arranged to work, and weather or some other situation prohibits the Work, the Police Department Detail Unit shall be notified at (617) 479-1212 before 5:30 a.m. on the day of intended Work to cancel the work order. Unless the work order is canceled in time, the Contractor shall be charged at the rate of minimum four hours for each officer included in the detail and shall be fully responsible for payment of all charges thus incurred.

4. subparagraph 5, during normal working hours (7:30 a.m. and 3:30 p.m.), after normal working hours, on weekends, and holidays, maintain at a minimum of one traffic lane on Hollis Avenue available to pedestrian and vehicular traffic.

5. subparagraph 6, Owner considers the access/egress to abutting residences and businesses to be of critical importance and Contractor must ensure strict compliance with the requirements specified.

6. subparagraph 8, include details of the required signs in traffic plan.

3.05 OVERALL EXECUTION REQUIREMENTS

A. Pursuant to Paragraph A, Coordination,

1. Pursuant to subparagraph A.3 Work coordination, comply with the required Work sequence and coordination specified in Section 01 11 10 for starting and completion of Work and Work hours in the area referenced as Atlantic Middle School Campus Improvement Project, and maintaining access to private driveways. Reflect in the Project scheduling.

2. Pursuant to subparagraph A.7 other coordination requirements,

   a. Coordinate Work such that Work is completed with minimum disruption to residents and businesses.

   b. Per SC-6.02 of Section 00 73 10, regular working hours are 7:30 a.m. to 3:30 p.m., Monday through Friday.

3. Pursuant to Paragraph B, Existing Conditions,

   a. Pursuant to subparagraph B.1 Project specific conditions,

      1) see information regarding existing conditions identified in in 00 73 10, Articles SC-4.02 and SC-4.; and

      2) Existing Conditions Survey prepared by DaSilva Survey Services. Vertical datum based on City of Quincy base datum.

      3) Conduct test pits to verify existing conditions as approved and coordinated with the City of Quincy DPW at no additional cost to Owner.

      4) Exploratory test pits performed December 2013

      5) Flood zone: all areas of proposed construction are within Federal Emergency Management Agency's (FEMA) "Zone X" as depicted on Flood Insurance Rate Maps 25021C0069E dated July 17, 2012.

   b. Pursuant to subparagraph B.2, existence and location of underground and other utilities and construction,

      1) See 3.a. above;

      2) engage a professional subsurface utility locator to verify the existence and location of underground utilities prior to starting Work; and

3) conduct test pits and other utility research as directed by Engineer and properly restore utilities interfered with or damaged during construction at no additional cost to the Owner.

B. Comply with the technical requirements included in the Quincy Code of Ordinances. Referenced portions and list of contents are included in Section 00 73 10.

ATTACHMENTS

A. List of MassDOT Highway Division documents

END OF SECTION

This page intentionally left blank

SECTION 01 15 00

SPECIFIC PROJECT REQUIREMENTS AND PROCEDURES

The following supplement or modify the requirements and procedures of Section 01 00 10 using the same Article heading to which the supplement or modification applies.

1.02 PRICE AND PAYMENT PROCEDURES

A. Pursuant to Paragraph B, payment for uniformed traffic police officers will be paid on the basis of the actual hours worked and paid by the Contractor as verified by the Resident Project Representative. The invoiced amounts paid may include standard administrative charges levied by the Police Department. Additional mark-up of police details invoices shall not be allowed.

B. Submit the following with Applications for Payment for Traffic Police Details. Failure to include this information and a proof of payment may result in non-payment of invoiced amount.

1. Receipts of invoices paid (include copy of cashed check paid to police), clearly showing:

a. the project name;

b. the officer's name;

c. location of assignment;

d. date of assignment;

e. hours of assignment; and

f. number of hours being invoiced.

C. Pursuant to Paragraph C, the City’s Change Order/Amendment form (C-006363A) shall also be used.

D. Pursuant to Paragraph D, Measurement and Payment Requirements, see Section 01 20 25 for Measurement and Payment for this Project.

1.03 ADMINISTRATIVE REQUIREMENTS

A. Pursuant to Paragraph A, Project Management and Coordination,

1. and per subparagraph 1., the Project contact list will be distributed at the preconstruction meeting.

2. and per subparagraph 4, identify documents and items for the Project as follows:

Atlantic Middle School Campus Improvement Project

3. and per subparagraph 7.a, Progress Meetings, biweekly, or as necessary, progress meetings will be held for this Project.

B. Pursuant to Paragraph B, Documentation of Progress,

1. and per subparagraph 3, provide construction photographs prior to start of construction to establish pre-construction conditions and to show progress in accordance with subparagraph 3.b.

C. Pursuant to Paragraph C, Submittal Procedures,

1. and per subparagraph C.1, address submittals as follows:

Engineer:

Woodard & Curran
95 Cedar Street, Suite 100
Providence, RI 02903
Attn: R.J. Dowling
1-800-985-7897 rdowling@woodardcurran.com

Owner:

City of Quincy Department of Park & Forestry
One Merrymount Parkway
Quincy, MA 02169
Attn: Executive Director Christopher Cassani
617 376-1253

2. Per subparagraph 5.f, Shop Drawings, submit 3 prints and electronic files in “PDF” by email.

3. Per subparagraph 6.a, As-Builts for Material and Equipment, submit 3 prints and electronic files in “.DWG” and “PDF” by email.

4. Per subparagraph 6.b, Conformed to Construction Record Drawings, submit 3 prints and electronic files in “.DWG” and PDF by email for Engineer’s use in preparing final Record Drawings.

D. Pursuant to subparagraph D.1, achievement of Substantial Completion shall also require restoration of the Project Site to the satisfaction of the Owner and Engineer.

1.04 QUALITY REQUIREMENTS

A. Pursuant to Paragraph A, Reference Standards, comply with the Massachusetts Department of Transportation - Highway Division's (referred to as "MassDOT") Construction Specifications (including Interim Supplemental Specifications and Supplemental Specifications), Construction Details (including Standard Drawings), and Design Guides as incorporated into the Specifications and Drawings, and as may be modified therein or superseded by the Owner's requirements through the direction of the Engineer.

1. Specific sections of the MassDOT documents are referenced in the Specifications and Drawings. References to "Department" in the MassDOT documents shall mean Owner or Resident Project Representative for this Project.

2. See MassDOT Highway Division website for referenced documents listed in Attachment A to this Section.

www.massdot.state.ma.us/highway/DoingBusinessWithUs/ManualsPublicationsForms

B. Comply with the requirements of the Quincy Code of Ordinances and Zoning Code portions of which are included in Section 00 73 10.

PART 2 – PRODUCTS

2.02 PRODUCT REQUIREMENTS

A. Pursuant to Paragraph A, General,

1. The definition of "material" also includes that defined in Section 00 73 73.

PART 3 – EXECUTION

3.01 TEMPORARY CONSTRUCTION FACILITIES

A. Pursuant to Paragraph F, Parking,

1. Parking areas are not to be constructed on-Site for the Project.

2. Prohibit personal vehicle parking on existing pavements and sidewalks within the Project Site.

B. Pursuant to Paragraph G, Field Offices, delete this paragraph in its entirety as field offices are not required.

C. Pursuant to Paragraph H, Staging Area, delete this paragraph in its entirety as a staging area is not provided.

D. Pursuant to Paragraph I, Project Identification, provide one 4-foot by 8-foot Project with verbiage as directed and approved by the City DPW.

3.02 TEMPORARY UTILITIES

A. Pursuant to Paragraphs A and B regarding electricity and phone services, delete these paragraphs in their entirety

B. Pursuant to Paragraph D, provide lighting as required for construction operations only.

3.03 TEMPORARY CONTROLS

A. Pursuant to Paragraph C, Erosion and Sediment Control,

1. subparagraph 2, coordinate plan with the requirements indicated in the Drawings.

2. subparagraph 23.c regarding Removal of Temporary Erosion Control, adequate grass growth for this Project is specified as minimum of 3-inches in height.

B. Pursuant to Paragraph F, Traffic Regulation,

1. subparagraph 1,

a. Include suggested construction staging, pertinent traffic control, and sign placement and sign size sketches showing the proposed sign setups intended for necessary traffic control and protection during the progress of the Work in the traffic control plan to be submitted to the Engineer and subject to approval of the City Traffic Engineer.

b. Detours and street closures are subject to the approval of the City Traffic Engineer who will strictly control the periods when traffic is being detoured or streets can be closed.

2. subparagraph 2, also comply with applicable portions of the "*Massachusetts Amendments to the 2009 Manual on Uniform Traffic Control Devices and the Standard Municipal Traffic Code*" published by the Massachusetts Department of Transportation Highway Division (referred to as "Mass Amendments").

3. subparagraph 4, comply with the relevant provisions of Section 7.00 of the MassDOT Standard Specifications and Supplements, and the following:

   a. The intent of posting police details is to ensure public safety and protection of property through appropriate traffic control. Police personnel are not to be employed as watchmen to protect the Contractor's equipment and materials.

   b. All uniformed traffic police personnel required for traffic control for construction shall be authorized by the Department of Public Work's Safety Officer and/or the Engineer.

   c. No payment will be made for personnel other than uniformed traffic police, nor will payment be made for uniformed traffic police not approved by the Engineer.

   d. Submit a forecast weekly traffic police detail schedule, at least 72 hours prior to the start of the Work describing: the nature and location of the Work, the number of police personnel, the estimated number of police hours required for each location, and justification for each uniformed officer being requested. All payment to the police for work under this Contract shall be in accordance with the Massachusetts General Laws, Chapter 149, Section 34B, which states that reserve police officers shall receive the same prevailing wage rate as paid to regular police officers.

   e. While scheduling Work in areas where uniformed traffic police is required, take into consideration that uniformed police are paid for a four-hour minimum. If uniformed police have been arranged to work, and weather or some other situation prohibits the Work, the Police Department Detail Unit shall be notified at (617) 479-1212 before 5:30 a.m. on the day of intended Work to cancel the work order. Unless the work order is canceled in time, the Contractor shall be charged at the rate of minimum four hours for each officer included in the detail and shall be fully responsible for payment of all charges thus incurred.

4. subparagraph 5, during normal working hours (7:30 a.m. and 3:30 p.m.), after normal working hours, on weekends, and holidays, maintain at a minimum of one traffic lane on Hollis Avenue available to pedestrian and vehicular traffic.

5. subparagraph 6, Owner considers the access/egress to abutting residences and businesses to be of critical importance and Contractor must ensure strict compliance with the requirements specified.

6. subparagraph 8, include details of the required signs in traffic plan.

3.05 OVERALL EXECUTION REQUIREMENTS

A. Pursuant to Paragraph A, Coordination,

1. Pursuant to subparagraph A.3 Work coordination, comply with the required Work sequence and coordination specified in Section 01 11 10 for starting and completion of Work and Work hours in the area referenced as Atlantic Middle School Campus Improvement Project, and maintaining access to private driveways. Reflect in the Project scheduling.

2. Pursuant to subparagraph A.7 other coordination requirements,

   a. Coordinate Work such that Work is completed with minimum disruption to residents and businesses.

   b. Per SC-6.02 of Section 00 73 10, regular working hours are 7:30 a.m. to 3:30 p.m., Monday through Friday.

3. Pursuant to Paragraph B, Existing Conditions,

   a. Pursuant to subparagraph B.1 Project specific conditions,

      1) see information regarding existing conditions identified in in 00 73 10, Articles SC-4.02 and SC-4.; and

      2) Existing Conditions Survey prepared by DaSilva Survey Services. Vertical datum based on City of Quincy base datum.

      3) Conduct test pits to verify existing conditions as approved and coordinated with the City of Quincy DPW at no additional cost to Owner.

      4) Exploratory test pits performed December 2013

      5) Flood zone: all areas of proposed construction are within Federal Emergency Management Agency's (FEMA) "Zone X" as depicted on Flood Insurance Rate Maps 25021C0069E dated July 17, 2012.

   b. Pursuant to subparagraph B.2, existence and location of underground and other utilities and construction,

      1) See 3.a. above;

      2) engage a professional subsurface utility locator to verify the existence and location of underground utilities prior to starting Work; and

3) conduct test pits and other utility research as directed by Engineer and properly restore utilities interfered with or damaged during construction at no additional cost to the Owner.

B. Comply with the technical requirements included in the Quincy Code of Ordinances. Referenced portions and list of contents are included in Section 00 73 10.

ATTACHMENTS

A. List of MassDOT Highway Division documents

END OF SECTION

This page intentionally left blank

Manuals, Publications & Form

MassDOT posts most of its manuals, publications and forms on its website. To view the documents listed below, click on the links. If you can't find what you're looking for below, please browse by department.

- Construction Specifications
- Construction Details
- Design Guides
- Project Management Guides
- Right of Way Brochures
- Highway Access Permits
- Miscellaneous Publications

Construction Specifications

Title	Date	File Type/Size
Standard Specification for Highways and Bridges (English Edition)	1988	HTML
Standard Specifications for Highways and Bridges (Metric Edition)	1995	PDF | 2.49MB
Supplemental Specifications to the Standard Specifications for Highways and Bridges	6/15/2012	PDF | 1.6MB
Interim Supplemental Specifications	1/25/2013	PDF | 86KB

ATTACHMENT A TO 01 15 00

Title	Date	File Type/Size
Price Adjustments	Updated Monthly	View Pages
Superseded Publications		
Supplemental Specifications to the 1988 Standard Specifications for Highways and Bridges (Combined English and Metric Edition) (Combined English and Metric Edition)	2/25/2010	PDF | 1MB
Supplemental Specifications to the 1988 Standard Specifications for Highways and Bridges (English Edition)	6/6/2006	PDF | 1.73ME
Supplemental Specifications to the 1995 Standard Specifications for Highways and Bridges (Metric Edition)	6/6/2006	PDF | 1.41mb

Construction Details

Title	Date	File Type/Size
2012 Construction Standard Details	March 2012	PDF | 27MB
2012 Construction Standard Details: Drawing History Index	2012	PDF | 119KB
Notes on Walks and Wheelchair Ramps for Designers and Construction Engineers	March 2012	PDF | 140KB
Traffic Management Plans and Detail Drawings		HTML link
Standard Drawings for Signs and Supports	1990	PDF | 7MB
Standard Drawings for Traffic Signals and Highway Lighting	1968	PDF | 3.25ME
Superseded Publications		
2010 Construction Standard Details (English Edition)	2010	PDF | 13MB
Metric/English Supplemental Drawings Supplement to the 1996 Metric Edition of the Construction and Traffic Standard Details and the 1977	Apr 2003	PDF | 5.6MB

Title	Date	File Type/Size
Mass. Department of Public Works Construction Standards		
Construction and Traffic Standard Details (Metric Edition)	1996	PDF | 7.8MB
1966 Construction Standards 1st Edition (Obsolete)	May 1966	PDF | 10MB

Design Guides

Title	Date	File Type/Size
Project Development & Design Guide	2006	HTML
2009 LRFD Bridge Manual	Oct 2009	HTML
2005 Bridge Manual, Revised August 2007	Aug 2007	HTML
CAD Standards		HTML
Manual on Uniform Traffic Control Devices		FHWA Link
Massachusetts Amendments to the 2009 Manual on Uniform Traffic Control Devices and the Standard Municipal Traffic Code	May 2012	PDF | 1.9MB
Right of Way Manual	03/30/2012	PDF | 12.2ME
Survey Manual	1996	PDF | 1MB
Historic Parkway Preservation Treatment Guidelines (DCR)	Mar 2007	PDF | 28MB
Superseded Publications		
Addenda to the 1997 Highway Design Manual	Apr 2003	PDF | 2.7MB
Highway Design Manual	1997	PDF | 6.65ME

Miscellaneous Publications

Title	Date	File Type/Size
English Bid Item Nomenclature List	02/12/2013	PDF | 452KB
Metric Bid Item Nomenclature List	02/12/2013	PDF | 453KB
Diesel Equipment Retrofit		HTML
Design Build Procurement Guide	2006	PDF | 206KB
Procedures for Speed Zoning on State and Municipal Roadways	2012	PDF | 2.2MB
Guide Sign Policy for Secondary State Highways	2008	HTML
Identification of Massachusetts Freight Issues and Priorities	Nov 1999	PDF | 7.4MB
Vegetation Management Plans		
Vegetation Management Plan 2009 - 2013	2009	PDF | 654KB
District 1 Vegetation Management Plan 2012 - 2016	2012	PDF | 452KB
Yearly Operational Plan Districts 2-5, 2012	2012	PDF | 37.9MB
District 6 Vegetation Management Plan 2011 - 2015	2011	PDF | 465KB
Herbicide Alternatives Research	Jul-2008	PDF | 8.9MB

Select Language Powered by Google Translate | **Translation Support**

Copyright © 2013 Commonwealth of Massach

SECTION 01 20 25

MEASUREMENT AND PAYMENT

PART 1 - GENERAL

1.01 DESCRIPTION

A. This Section describes the measurement and payment for the Work to be completed under each item in Section 00 43 22 Unit Prices.

B. Payment procedures are in accordance with the Agreement, Article 14 of the Standard General and Supplementary Conditions, the Additional Supplementary Conditions (if any), and the General Requirements.

C. Measurement: as determined, verified, or approved by Engineer in accordance with Paragraph 11.03 of the Standard General and Supplementary Conditions, the Additional Supplementary Conditions (if any), and the General Requirements, except as otherwise specified.

D. The Bid item descriptions are general and may not specifically describe all associated Work or elements thereof. Work described in each Bid item shall be as specified and shown on the Drawings and not included in other Bid items.

E. Review Work associated with each Bid item. Claims for being unfamiliar with these requirements or of the content of the Specifications and Drawings will not be considered.

F. The following Work is not specifically described or designated as a Bid item, is considered incidental to <u>all Bid items</u> and shall not be measured separately for payment.

1. General Requirements specified in Sections 01 00 10 and 01 15 00 including, but not limited to:

a. temporary traffic control and regulation; saw cutting of existing pavements and sidewalks; installation of pavement markings disturbed by Work; removal and disposal of existing pavements and sidewalks; erosion control (including installation, operation, maintenance, removal and off-Site disposal of erosion control devices); construction dewatering (including compliance with applicable Laws and Regulations), notifications to abutters; and temporary construction projects signs;

2. Restoration of unpaved areas disturbed by the Contractor within the limits of Work.

3. Field and laboratory testing and reporting by independent laboratory, including but not limited to compaction of backfill materials; aggregate gradation; and concrete testing.

4. Labor, materials, and equipment necessary to conduct Water Line Disinfection/ Testing in accordance with City of Quincy Specifications & Requirements.

5. Labor, materials, and equipment necessary to conduct test pits to verify existing field conditions and the location, size, type, material, and orientation of existing pipes and utilities shown on the Drawings.

G. No compensation will be provided for restoration of paved and unpaved surfaces disturbed by the Contractor outside the limits of Work.

H. Design, installation and removal of excavation support systems, utility/structure support systems, temporary and permanent utility/structure support systems associated with an item of Work shall be considered incidental to that item.

I. Temporary bypass pumping and plugging of flows shall be considered incidental to the Work and shall not be measured separately for payment.

1.02 MEASUREMENT AND PAYMENT BASIS FOR EACH BID ITEM

Item 1 – 12-inch PVC Pipe (SDR 35) Item 2 – 12-inch Watertight HDPE Pipe Item 3 – 15-inch Watertight HDPE Pipe Item 4 – 18-inch Watertight HDPE Pipe	
Measurement	Along the horizontal projection of the centerline of the pipe; measured from inside face of manhole
Payment	Unit price per linear foot
Schedule of Payment	Completion of Work and successfully pass testing - 100%
Includes labor, services, material and equipment associated with furnishing and installing the drain pipe; pipe connections; rubber sleeve connections and mortar sealing of pipe and structure; unclassified excavation; shoring and bracing; dewatering; bedding; backfill; backfill compaction and material testing; re-connection to existing pipe and or structures (including coring of new penetrations and plugging abandoned penetrations in existing structures); provision & reconfiguration of brick invert of new & existing manholes, removal and off-Site disposal of old drain pipe; capping and abandonment of old drain pipe; removal and off-Site disposal of bituminous concrete pavement, concrete and excess soils; and other required Work.	

Item 5 – Sub-surface Stormwater Mitigation Facility	
Measurement	Work completed to date
Payment	Lump Sum
Schedule of Payment	Completion of Work - 100%
Includes labor, services, material and equipment associated with furnishing and installing the sub-surface stormwater mitigation facility drain pipe; pipe connections and fittings; cleanout/ inspection port riser pipes, frame and covers; concrete collars; geotextile trench stabilization fabric; unclassified excavation; shoring and bracing; dewatering; bedding; crushed stone; backfill; backfill compaction and material testing; removal and off-Site disposal of excess soils; and other required Work.	

Item 1a –Surface Stormwater Mitigation Facility	
Measurement	Work completed to date
Payment	Lump Sum
Schedule of Payment	Completion of Work - 100%
Includes labor, services, material and equipment associated with, but not limited to: protection of indicated trees and fencing, clearing & grubbing including tree removal and disposal; strip, stockpile, screen, and reuse of existing topsoil materials up to one foot in depth; unclassified excavation; grading, scarification of pond bottom surface, backfill compaction and material testing; removal and off-Site disposal of excess soils; seeding of basin and slopes with New England wetland seed mixture, erosion measures indicated and other required Work.	

Item 6 – 4-ft Diameter Catch Basin Item 7 – 6-ft Square Double Catch Basin Outlet Control Structure	
Measurement	Actual catch basin furnished and installed
Payment	Unit price per each
Schedule of Payment	Completion of Work - 100%
Includes labor, services, material and equipment associated with furnishing and installing the catch basins regardless of depth including; anti-floatation slab; pipe connections; joint sealant; excavation; shoring and bracing; bedding; dewatering; backfill; gravel roadway base; backfill compaction and material testing; removal and off-Site disposal of old catch basins and pipe; removal and off-Site disposal of bituminous concrete pavement and excess soils and other required Work.	

Item 8 – 4-ft Diameter Drainage Manhole	
Measurement	Actual drain manhole furnished and installed
Payment	Unit price per each
Schedule of Payment	Completion of Work - 100%
Includes labor, services, material and equipment associated with furnishing and installing the manholes regardless of depth including; anti-floatation slab; pipe connections; joint sealant; unclassified excavation; shoring and bracing; bedding; dewatering; backfill; gravel roadway base; backfill compaction and material testing; removal and off-Site disposal or abandonment of old drain manholes and pipe; removal and off-Site disposal of bituminous concrete pavement and excess soils, and other required Work.	

Item 9 – Remove & Reset Headwall	
Measurement	Actual headwall removed and reinstalled
Payment	Unit price per each
Schedule of Payment	Completion of Work - 100%
Includes labor, services, material and equipment associated with removal & resetting existing headwall, furnishing and installing a 2 foot bedding of ¾ inch gravel base wrapped in stabilization fabric pipe connections; joint sealant; unclassified excavation; shoring and bracing; dewatering; backfill; backfill compaction; removal and off-Site disposal excess soils, and other required Work.	

Item 10– Drainage Manhole Frame and Cover	
Measurement	Sets installed
Payment	Unit price per set
Schedule of Payment	Work completed for each set - 100%
Includes labor, services, material and equipment associated with furnishing and installing the drain manhole frame and cover, including brick & mortar to raise manhole cover to grade, concrete collars and all related Work.	

Item 11 –Catch Basin Frame and Grate Item 12 – Double Catch Basin Frame and Grate	
Measurement	Sets installed
Payment	Unit price per set
Schedule of Payment	Work completed for each set - 100%
Includes labor, services, material and equipment associated with furnishing and installing the catch basin frame and grate, including brick & mortar to raise catch basin grate to grade, concrete collars and all related Work.	

Item 13 –Granite Curbing Type VA-3 - Straight and Granite Curb - Type VA-3 - Curved	
Measurement	Linear foot of curbing installed
Payment	Unit price per linear foot
Schedule of Payment	Completion of Work – 100%
Includes all labor, services, material and equipment associated with installing vertical granite curbs, storing in a secure location during excavation, saw cutting of the existing pavement where indicated or directed, the removal of the existing pavement, excavation, curb installation, all handling, cutting ends square, trimming exposed and hidden faces, cleaning all sections to be set, gravel borrow, including grading and compacting and/or placement of concrete base, pavement materials between the curb and the existing or proposed pavement, replacement and compaction of sidewalk subgrade, setting of curbing to match adjacent existing curbing where applicable to pre-construction conditions, and all other required Work.	

Item 14 – Remove and Reset Granite Curbing	
Measurement	Linear foot of curbing removed and replaced
Payment	Unit price per linear foot
Schedule of Payment	Completion of Work – 100%
Includes all labor, services, material and equipment associated with removing existing granite curbs, storing in a secure location during excavation, saw cutting of the existing pavement where indicated or directed, the removal of the existing pavement, excavation, removal and resetting, all handling, cutting ends square, trimming exposed and hidden faces, cleaning all sections to be reset, gravel borrow, including grading and compacting and/or placement of concrete base, pavement materials between the reset curb and the existing or proposed pavement, replacement and compaction of sidewalk subgrade, resetting of original curbing to match pre-construction conditions, and all other required Work. Any surplus (excess) curbing shall become property of the Owner and delivered to 55 Sea Street at no additional cost.	

Item 15 –Hot Mix Asphalt Curb: Type-2	
Measurement	Linear foot of curbing installed
Payment	Unit price per linear foot
Schedule of Payment	Completion of Work – 100%
Includes all labor, services, material and equipment associated with installing hot mix asphalt curbs, saw cutting of the existing pavement where indicated or directed, the removal of the existing pavement, excavation, replacement and compaction of sidewalk subgrade, matching pre-construction conditions, and all other required Work.	

Item 16 –Pre-cast Concrete Curb	
Measurement	Linear foot of curbing installed
Payment	Unit price per linear foot
Schedule of Payment	Completion of Work – 100%
Includes all labor, services, material and equipment associated with installing pre-cast concrete curbs, storing in a secure location during excavation, saw cutting of the existing pavement where indicated or directed, the removal of the existing pavement, excavation, curb installation, all handling, cutting ends square, trimming exposed and hidden faces, cleaning all sections to be set, gravel borrow, including grading and compacting and/or placement of concrete base, setting of curbing to match adjacent existing curbing where applicable, and all other required Work.	

Item 17 –Concrete Sidewalk	
Measurement	Square yard of concrete sidewalk installed
Payment	Unit price per square yard
Schedule of Payment	Completion of Work - 100%
Includes labor, services, material and equipment associated with installation of new concrete sidewalks, sidewalk subgrade; gravel base and compaction, matching of new concrete sidewalk to adjacent existing concrete materials as necessary to meet and match pre-construction conditions, feather sidewalk grade to meet surrounding sidewalk elevation, and ensure smooth transition, provision and construction of expansion and control joints, surface finishing, and other required Work.	

Item 18 –Accessible Curb Ramp	
Measurement	Actual accessible curb ramp and installed
Payment	Unit price per each
Schedule of Payment	Completion of Work - 100%
Includes labor, services, material and equipment associated with installation of all components associated with new accessible curb ramps from the limits of the ramp tie-in to the adjacent surface(s) including, but not limited to: provision of granite transition curbs, flush granite curbs, tactile warnings, saw cutting of the existing pavement where indicated or directed, the removal of the existing concrete and/or pavement, excavation, curb installation, all handling, cutting curb ends square, trimming exposed and hidden faces, cleaning all sections to be set, gravel borrow, including grading and compacting and/or placement of concrete base, ramp concrete sidewalk, materials as necessary to meet and match adjacent surfaces to ensure smooth transition to proposed or pre-construction conditions, feather sidewalk grade to meet surrounding sidewalk elevation, and, provision and construction of expansion and control joints, surface finishing, and other required Work.	

Item 19 – : Hot Mix Asphalt Base Course Item 20 – Hot Mix Asphalt Surface Course- Standard Top	
Measurement	Per Ton delivered & placed based on plant slips
Payment	Unit price per Ton
Schedule of Payment	Completion of Work - 100%
Includes labor, services, material, equipment and tools associated with furnishing and installing the asphalt regardless of placement method, subgrade grading and compaction; match pre-construction conditions, feather grade to meet surrounding elevation, and ensure smooth transition, compaction and material testing, and all other required Work. Hot Mix Asphalt for miscellaneous use will not be measured separately for payment but measured under this item.	

Item 21 - Control Density Fill, Type 2E	
Measurement	Per cubic yard delivered & placed based on plant slips
Payment	Unit price per cubic yard
Schedule of Payment	Completion of Work - 100%
Includes labor, services, material and equipment placing Control Density Fill (CDF), Type 2e, Flowable (Excavatable) for preventative trench settlement or shallow cover pipe installations only where required by the Specifications, Drawings or as directed.	

Item 22 - Gravel Base	
Measurement	Per cubic yard measured in place
Payment	Unit price per cubic yard
Schedule of Payment	Completion of Work - 100%
Includes labor, services, material and equipment associated with furnishing and installing the gravel base in areas specified for roadways, driveways and parking areas that are not part of a pipe trench bedding/ backfill; drainage structure installation, sub-surface stormwater mitigation facilities and where not otherwise noted to be paid for with other bid items; backfill compaction and material testing; removal and off-Site disposal of excess soils; and other required Work.	

Item 23 – Loam Borrow	
Measurement	Per cubic yard delivered & placed based on truck delivery slips
Payment	Unit price per cubic yard
Schedule of Payment	Completion of Work - 100%
Includes all labor, materials, and equipment including furnishing and installing, placement/spreading and rolling/tamping of the materials, excavation and preparation of areas and locations for installation of plant materials and all other Work incidental to the satisfactory completion of the Work.	

Item 24 – Strip, Stockpile and Reuse Existing Loam Borrow	
Measurement	Per cubic yard measured in place
Payment	Unit price per cubic yard
Schedule of Payment	Completion of Work - 100%
Includes all labor, materials, and equipment associated with excavation stripping and stockpiling of the existing topsoil materials up to a depth of one foot within limits of work and the reuse of stockpiled excavations as directed including removal of vegetative mater from the soil, placement/spreading and rolling/tamping, excavation and preparation of areas and locations for installation of plant materials and all other Work incidental to the satisfactory completion of the Work.	

Item 25 – Seeding	
Measurement	Per square yard measured in place
Payment	Unit price per square yard
Schedule of Payment	Completion of Work - 100%
Includes all labor, materials, and equipment including seed spraying, limestone, fertilizers, fine grading, rolling the seeded areas, watering, clearing the weed and all else incidental thereto and necessary for healthy grass areas without any bare spots or areas.	

Item 26 – Tree Protection	
Measurement	Work completed to date
Payment	Unit price per each tree protected
Schedule of Payment	Completion of Work - 100%
Includes labor, services, material, tools and equipment necessary to protect existing trees and root systems from construction Work within limits of Work as shown on the Drawings and as directed.	

Item 27 – Tree Remove & Dispose	
Measurement	Work completed to date
Payment	Unit price per each tree removed & disposed
Schedule of Payment	Completion of Work - 100%
Includes labor, services, material, tools and equipment necessary to cut existing trees and expose by excavation, remove and/or cut, as required, the tree stumps and root systems, grinding of stump and protection of adjacent surface features where indicated, within limits of Work as shown on the Drawings and as directed. The Work shall also include removal and disposal of tree stumps, roots, organic matter and the other unsuitable materials resulting from the operation.	

Item 28 – Tree Removed, Stored, Protected & Reinstalled	
Measurement	Work completed to date
Payment	Unit price per each tree removed, stored and reinstalled
Schedule of Payment	Completion of Work - 100%
Includes labor, services, material, tools and equipment necessary to protect, expose by excavation (mechanical and or by hand), remove the tree and root systems; burlap wrap root ball; transport to protective storage; water and care for as directed by a Massachusetts licensed arborist; excavation, preparation and reinstallation of trees as under direction of licensed arborist at locations shown on the Drawings and all other Work incidental to the satisfactory completion of the Work.	

Item 29 – Arborvitae Tree Provide & Install	
Measurement	Work completed to date
Payment	Unit price per each tree provided and installed
Schedule of Payment	Completion of Work - 100%
Includes labor, services, material, tools and equipment necessary to provide and install arborvitae trees as shown on the Drawings and under direction of Massachusetts licensed arborist.	

Item 30 – Maple Tree Provide & Install	
Measurement	Work completed to date
Payment	Unit price per each tree provided and installed
Schedule of Payment	Completion of Work - 100%
Includes labor, services, material, tools and equipment necessary to provide and install coniferous trees as shown on the Drawings and under direction of Massachusetts licensed arborist.	

Item 31 – Screen Plantings Behind Wall	
Measurement	Work completed to date.
Payment	Contingency
Schedule of Payment	Completion of Work - 100%
Includes labor, services, material, tools and equipment necessary to provide and install screening planting trees under direction of Massachusetts licensed arborist. The actual plantings shall be coordinated with Owner & Engineer with written proposal provided for acceptance prior to implementation of the Work.	

Item 32- Chain Link Fence 72 Inches in Height Item 33- Chain Link Fence 48 Inches in Height	
Measurement	Per linear foot measured in place
Payment	Unit price per linear foot
Schedule of Payment	Completion of Work - 100%
Includes all labor, materials, and equipment to provide and install chain link fence at the locations and limits indicated on the Drawings. Provide posts (with exception of post 25' in height to be paid under separate line item), post foundations, top, bottom and intermittent crossing and support bars, hardware and appurtenances and all other Work incidental to the satisfactory completion of the Work.	

Item 34- 10 Foot Wide Chain-link Fence Swing Gate 48 Inches in Height	
Measurement	Work completed to date
Payment	Unit price per each gate
Schedule of Payment	Completion of Work - 100%
Includes all labor, materials, and equipment to provide and install chain link fence lockable swing gates at the locations and limits indicated on the Drawings. Provide posts, post foundations, top, bottom and intermittent crossing and support bars, hardware and appurtenances and all other Work incidental to the satisfactory completion of the Work.	

Item 35- Athletic Field Netting Post 25' in Height	
Measurement	Per post installed, measured in place
Payment	Unit price per each post and associated hardware installed
Schedule of Payment	Completion of Work - 100%
Includes all labor, materials, and equipment to provide and install athletic field netting post 25' in height and hardware at the locations indicated on the Drawings. Provide posts, post foundations, hardware and appurtenances to hoist and secure netting provide by others and all other Work incidental to the satisfactory completion of the Work.	

Item 36- Timber Guardrail	
Measurement	Per linear foot measured in place
Payment	Unit price per linear foot
Schedule of Payment	Completion of Work - 100%
Includes all labor, materials, and equipment to provide and timber guardrail at the locations and limits indicated on the Drawings. Provide posts, post foundations, rails, hardware and appurtenances and all other Work incidental to the satisfactory completion of the Work.	

Item 37 – Bituminous Pavement Demolition, Remove and Dispose	
Measurement	Per square yard measured in place
Payment	Unit price per square yard
Schedule of Payment	Per square yard of bituminous pavement demolished, removed and disposed as measured
Includes all labor, materials, handling, transportation and equipment to demolish, remove and dispose bituminous pavement at the locations and limits indicated on the Drawings and all other Work incidental to the satisfactory completion of the Work.	

Item 38 – Cement Concrete Sidewalk, Curb and Walkway Demolition, Remove and Dispose	
Measurement	Per square yard measured in place
Payment	Unit price per square yard
Schedule of Payment	Per square yard of cement concrete sidewalk, curb and walkway demolished, removed and disposed as measured
Includes all labor, materials, handling, transportation and equipment to saw cut as indicated, demolish, remove and dispose cement concrete sidewalk, curb, walkway and concrete wheel stops at the locations and limits indicated on the Drawings and all other Work incidental to the satisfactory completion of the Work.	

Item 39- Chainlink Fence – Remove and Dispose	
Measurement	Per linear foot measured in place
Payment	Unit price per linear foot
Schedule of Payment	Completion of Work - 100%
Includes all labor, materials, and equipment to remove, and dispose existing chain link fence, posts and post foundations, horizontal bar members, hardware and all appurtenances at the locations and limits indicated on the Drawings and all other Work incidental to the satisfactory completion of the Work.	

Item 40 –Regulatory Signs	
Measurement	Per square foot of sign area installed, measured in place
Payment	Unit price per each sign removed and reset
Schedule of Payment	Completion of Work - 100%
Includes all labor, materials, and equipment including installation of signage on post, post paid for separately, transportation, storage and protection, furnishing and installing applicable mounting hardware and other incidentals necessary to complete the Work.	

Item 41 – Miscellaneous Signs Removed And Reinstalled	
Measurement	Actual sign removed and reset
Payment	Unit price per each sign removed and reset
Schedule of Payment	Completion of Work - 100%
Includes all labor, materials, and equipment including dismantling of existing signage, removal, transportation, storage and protection, removal & disposal of existing posts, furnishing and installing applicable mounting hardware, excavation, gravel, backfill, compaction, concrete base where required, restoration of disturbed surfaces, and other incidentals necessary to complete the Work.	

Item 42 – Miscellaneous Signs Removed and Disposed	
Measurement	Actual sign removed and disposed
Payment	Unit price per each sign removed and disposed
Schedule of Payment	Completion of Work - 100%
Includes all labor, materials, and equipment including dismantling existing signage, removal, disposal, transportation, and other incidentals necessary to complete the Work.	

Item 43 –Signs Post Removed and Disposed	
Measurement	Actual sign post removed and disposed
Payment	Unit price per each sign post removed and disposed
Schedule of Payment	Completion of Work - 100%
Includes all labor, materials, and equipment including removal & disposal of existing posts, transportation, excavation, backfill, compaction, restoration of disturbed surfaces, and other incidentals necessary to complete the Work.	

Item 44 – Signs Posts	
Measurement	Actual sign post installed
Payment	Unit price per each sign post installed
Schedule of Payment	Completion of Work - 100%
Includes all labor, materials, and equipment including transportation, storage and protection, furnishing and installing the new posts, furnishing and installing applicable mounting hardware, excavation, gravel, backfill, compaction, concrete base where required, restoration of disturbed surfaces, and other incidentals necessary to complete the Work.	

Item 45 –Pavement Markings	
Measurement	Work completed to date
Payment	Lump Sum
Schedule of Payment	Completion of Work - 100%
Includes labor, services, material and equipment associated with, but not limited to, the removal of pavement markings and the provision of pavement markings indicated on the plans; surface cleaning and preparation, symbols, lines & words per the Manual on Uniform Traffic Control Devices (latest edition) and other incidentals necessary to complete the Work.	

Item 46 –Concrete Stairs and Handrails	
Measurement	Work completed to date
Payment	Lump Sum cost for all restorative stair & rail work
Schedule of Payment	Completion of Work - 100%
Includes labor, services, material and equipment associated with the restoration of the exterior concrete stairways and hand rails indicated on the plans including, but not limited to, select demolition, furnishing and installing handrails rails, furnishing and installing applicable mounting hardware, excavation, gravel, backfill, compaction, concrete, restoration of disturbed surfaces, and other incidentals necessary to complete the Work.	

Item 47 – Trench Excavation Below Normal Grade	
Measurement	Per cubic yard measured in place
Payment	Unit price per cubic yard
Schedule of Payment	Per cubic yard of soil removed and replaced as measured
Includes excavation and replacement of materials determined as unsuitable for pipe subgrade, including all required testing, documentation, and legal disposal of spoils not containing oil or hazardous materials (OHM).	

Item 48 – Rock Boulder Excavation	
Measurement	Per cubic yard measured in place prior to excavation within pay limits.
Payment	Unit price per cubic yard
Schedule of Payment	Completion of Work - 100%
Includes all labor, tools, equipment and materials to remove "rock" from its original bed by drilling, barring or wedging (blasting shall not be permitted) specifically ledge or bed rock and boulders larger than one cubic yard in volume, excavation, removal, and disposal of the rock and replacement as necessary with suitable backfill material as directed by Engineer and all incidentals necessary to complete the Work.	

Item 49 – 6-inch Water Relocation	
Measurement	Work completed to date
Payment	Lump Sum Price
Schedule of Payment	Completion of Work and successfully pass testing - 100%
Includes labor, services, material and equipment associated with furnishing and installing the water distribution pipe complete; demolition and disposal of the existing pipe and relocation necessary to facilitate drainage improvements; unclassified excavation; shoring and bracing; dewatering; bedding; backfill and compaction;; backfill compaction and material testing; provision & installation of required pipe fittings, bends and dresser couplings necessary of installation and re-connection to existing water distribution pipe; temporary plugging or shutoff of water flow, and other required Work for furnishing and water distribution pipe; removal and offsite disposal of pipe, fittings, bituminous concrete pavement, and excess soil and other required Work.	

Item 50 – Gas Main Relocation	
Measurement	Work completed to date
Payment	Lump Sum based on Schedule of Values
Schedule of Payment	Completion of Work and successfully pass testing - 100%
Includes labor, services, material and equipment associated with coordinating with utility service provider and associated costs of the utility provider and or contractor for furnishing and installing the gas distribution pipe complete; demolition and disposal of the existing pipe and relocation necessary to facilitate drainage improvements; unclassified excavation; shoring and bracing; dewatering; bedding; backfill and compaction; backfill compaction and material testing; provision & installation of materials and appurtenances necessary to installation and re-connection to existing gas distribution pipe; coordination of and temporary shutoff of gas flow, and other required Work for furnishing gas distribution pipe; removal and offsite disposal of pipe and appurtenances, bituminous concrete pavement, and excess soil and other required Work.	

Item 51 - Additional Hours of Work Fee (Deduction)	
Measurement	Each hour worked outside the allowable Work hours approved by Owner
Payment	Deduction of $130 per each hour
Schedule of Payment	Deduction on each Application for Payment containing hours worked outside the allowable Work hours approved by Owner
The Contract Price shall be reduced by $130 for each approved hour worked outside the specified allowable Work hours to cover additional engineering costs incurred by the Owner for services of the Resident Project Representative. Any Work conducted by the Contractor outside of the specified allowable Work hours must be approved by the Owner.	

Item 52 – Traffic Police Details	
Measurement	Work completed to date.
Payment	Contingency
Schedule of Payment	Based on actual hours worked and invoices paid including standard administrative charges levied by the Police Department and excluding mark-up
Includes all labor, materials, and equipment, tools and all else incidental thereto in the scheduling and managing of Traffic Police Details.	

Item 53: Mobilization/Demobilization	
Measurement	At Project commencement and at Project completion
Payment	Lump sum price based on Schedule of Values, operations and expenses in connection with mobilization and demobilization shall not exceed five percent (5%) of the Contract Price.
Schedule of Payment	50% Project Commencement 50% Substantial Completion
Includes obtaining necessary permits including associated fees, insurance and bond costs, signage, development of traffic management plan, and Water Control and Dewatering plan and other required plans; necessary pre-construction investigations, test pits and verifying existing field conditions, preparation of Work and operations, movement of men, equipment and all other Work and operations which must be performed from the time prior to the start of the Work to the final acceptance of the Work by the City. Note Owner will waive fees associated with City permits and costs for these permits shall not be included in this item.	

PART 2 - PRODUCTS (not used)

PART 3 – EXECUTION (not used)

END OF SECTION

This Page Intentionally Left Blank

SECTION 01 50 10

TEMPORARY WATER BYPASS

PART 1 - GENERAL

1.01 DESCRIPTION

A. Work included: Required labor, materials, tools, apparatus, and equipment to furnish, install and maintain temporary bypass water mains including service connections as described in the Specifications and shown on the Drawings.

1.02 SUBMITTALS

A. No interruption in water service or fire protection shall be permitted during water main construction or bypass installation/removal. Temporary bypass water mains, at a minimum, must be connected to the existing distribution system at both ends to maintain continuity in the distribution system. "Dead-ending" of the bypass system is not permitted, unless otherwise approved by Owner. The contractor shall take necessary measures, including tapping existing water mains and installing gate valves when existing hydrants and existing gate valves are unavailable for use, to assure continuous water service and fire protection when developing the bypass water main/service plan. At least seven (7) calendar days prior to beginning temporary bypass installation, the Contractor shall submit to the Engineer for review and acceptance a plan and schedule of his proposed temporary bypass water main/service connections. The submittal shall include:

1. A plan showing the layout of temporary water mains including: connections to existing hydrants, taps to temporary mains at street crossings, installing gate valves, large driveways, etc., existing water main valves to be operated, and location of bypass hydrants and valves.

2. A description of the bypass water main/service connection installation for each block required.

3. A daily schedule of bypass installation events for each block including: notification of business owners and residents, bypass main installation and disinfection, laboratory analysis of bypass water service installation, etc.

4. A list of spare parts for maintenance and repairs to temporary bypass and service connections. Also include the location where the spare parts will be stored.

PART 2 - PRODUCTS

2.01 GENERAL

A. Materials to be used for the bypass shall meet the requirements of these specifications under other Sections.

2.02 TEMPORARY BYPASS WATER MAIN

A. Temporary bypass water main and fittings shall be constructed of high density polyethylene pipe or schedule 40 galvanized steel pipe, with joint coupling, of sufficient strength to meet applied load and working pressure. No other materials will be accepted.

B. Bypass pipe shall be capable of a minimum working pressure of 150 psi and shall be capable of withstanding vehicular traffic loading.

C. The minimum wall thickness of HDPE bypass pipe shall be 0.602 inches for 6-inch pipe, 0.409 inches for 4-inch pipe and 0.216 inches for 2-inch pipe. The pipe must be manufactured from high density, extra high molecular weight compound equaling a PE 3408 Designation and shall conform to ASTM-1248 and ASTM-3350.

2.03 TEMPORARY WATER SERVICE CONNECTIONS

A. Temporary water service connections shall be a minimum ¾-inch polyethylene or rubber hose tubing and shall comply with NSF/ANSI 61, Drinking Water System Components – Health Effects and shall be approved by Owner prior to installation.

2.04 TEMPORARY HYDRANTS

A. Temporary hydrants shall be of a type acceptable to the local Fire Department and shall be supported by a means approved by the local Fire Department to prevent deflection of the hydrant or bypass piping system when the hydrant is in operation.

PART 3 - EXECUTION

3.01 GENERAL:

A. The Contractor shall furnish and install temporary bypass water main, temporary hydrants, temporary in-line gate valves, temporary house service connections, temporary service blow backs and permanent gate valves prior to water main replacement construction. This bypass main shall provide fire flow interconnections and water service connections to businesses and residents.

B. The bypass pipes shall be supplied from connections made to hydrants or existing water mains that are to remain in service. The Contractor shall furnish fittings and make necessary connections required to supply the bypass pipes (including services) with water, including approved corporation stops, tapped saddles, and plugs at dead end mains.

C. The Contractor shall also furnish, install, maintain, and remove service hoses or pipes, of approved size, to service all consumers from gated connections on the bypass pipe. The Contractor shall make the actual connection and disconnection of his work and shall contact (with written notice) and coordinate with the owner of any building to be serviced so that there will be the least amount of inconvenience to the owners. Written notices shall be submitted to the Owner for approval prior to distributing to property owners. The Contractor shall connect to the existing service at a meter box. No separate payment will be made for tapping existing fire or service line for purposes of supplying temporary water service.

D. Temporary bypass pipe and other materials shall provide adequate water tightness, and care shall be exercised throughout the installation of the temporary pipe and making up of temporary connections to avoid possible pollution of water mains or house services or contamination of the temporary bypass pipe itself. The Contractor shall flush and disinfect ALL temporary pipe and hose to prevent contamination in accordance with AWWA Standard C651.

E. In general, the temporary bypass pipe shall be laid within street lines in locations satisfactory to the Owner where it will cause the least obstruction and will be least likely to be damaged. At driveways, provision shall be made to permit vehicles to drive over the temporary pipe by the use of temporary bituminous pavement, cold patch, or other approved material to form a ramp on each side of the pipe to the satisfaction of the Owner or by depressing the pipe as at street crossings. In some areas, because the bypass and/or service pipe or hoses may be considered an obstruction to safe passage, additional precautions shall be taken by the Contractor to minimize public inconvenience. This will require additional ramping on both sides of the bypass pipe at building walkway entrances, at all sidewalk crossings, and elsewhere.

F. At street crossings, a narrow trench shall be cut in the existing pavement sufficiently wide and deep enough to allow placement of the bypass pipe just below the roadway surface with temporary surfacing placed above it, compacted by approved means, flush with the adjacent pavement. Allowing the temporary surfacing to be compacted by vehicular traffic is not to be considered as an approved method. Upon removal of the bypass piping, the trench shall be backfilled with suitable material, properly compacted, and restored to service with a permanent wearing surface. No separate payment will be made for this work.

G. In all cases, the location, method of placing, materials employed, and the sanitary precautions shall be fully satisfactory to the Owner.

H. Once put in use, the temporary service pipe shall be maintained by the Contractor 24 hrs/day, 7 days/week until the water main is restored to service. Any interruptions, whether caused by frost, physical damage, or otherwise, shall be immediately corrected and the service restored or replaced without additional payment.

I. The Contractor shall complete all sections of the project in progress before the daily low temperature falls below 35 degrees Fahrenheit. The Contractor is responsible for maintaining all components of the bypass system impacted by freezing conditions, including service connections and shall take reasonable measures when scheduling work as cold weather season approaches. Should it become necessary to stop work and remove the bypass system due to freezing conditions, separate payment shall not be made to re-install, chlorinate and test the bypass system.

J. After the water mains have been replaced and new water mains put into service, all temporary bypass and service lines must be removed without delay and all bituminous patching required by such temporary lines shall be applied at this time.

K. Each building should have its own temporary water connection. Directly connecting one building to another is prohibited.

END OF SECTION

SECTION 01 51 42

TEMPORARY STORM DRAIN BYPASS

PART 1 - GENERAL

1.01 DESCRIPTION OF WORK

A. Furnish, install and maintain temporary measures for storm drain bypass, including but not limited to, temporary bypass piping, plugs, and pumping.

1.02 ADMINISTRATIVE REQUIREMENTS

A. Coordination, Sequencing, and Scheduling: in accordance with Division 01 General Requirements.

1.03 SUBMITTALS

A. Submit in accordance with the Division 01 General Requirements.

B. Bypass Pumping Plan for **each** bypass location to Engineer and Owner 2 weeks prior to bypassing stamped by a Massachusetts Registered Professional Engineer.

C. Bypass Pumping Plan must contain at a minimum:

1. Standard Operating Procedure: Describe the normal sequence of events to be followed while setting up, pumping, and breaking down pumping equipment. Plan must address strategies and safeguards to ensure that public safety and environmental health is maintained at all times, the possibility of property damage and wetlands impacts, and overall level of inconvenience is minimized.

2. A bypass routing diagram including pump location for **each** Work zone,

3. Calculations: Estimates of anticipated peak flows, pump rates, pump curves, and other relevant design.

4. List of the equipment that will be used during normal pumping operation.

5. Emergency Response Plan: Describe the intended means of handling the following situations, include both response and clean-up measures. List equipment to be used and where it will be stored in case of emergency:

a. Break or failure of bypass line (pipe)

b. Failure of bypass pump

c. Overflow

d. Back up into dwelling or onto private property

e. Failure of bypass pumping system to accommodate flow.

D. Shop Drawings

1. Pumps

2. Pipe or hose

3. Joints/couplings

4. Plugs and/or bladders

1.07 SITE CONDITIONS

A. Existing Conditions: per Division 01 General Requirements.

PART 2 – PRODUCTS

2.01 PUMPS, PIPES & FITTINGS

A. Pump: suitable for usage with storm drainage or sewage and capable of conveying the volume of flow anticipated with a sufficient margin of safety. Provide for 100 percent redundancy (two pumps shall be provided AT THE SITE for every one pump required) if flow cannot be returned to the storm drain at any time if pumping system failure occurs. Redundant pump: include suction and discharge piping and quick connect couplings to facilitate change out of pumps.

B. Pipe and fittings: constructed of carbon steel, or fused high-density polyethylene pipe or approved equal. Fittings shall be quick-disconnect type.

C. Lay flat hose: extra heavy duty, highly abrasion resistant and fitted with gasketed couplings. Hose shall be rated for 150% of working pressure.

D. Provide a temporary enclosure for the bypass pumping system for sound attenuation operating outside of regular working hours meeting state and local Laws and Regulations for noise requirements.

PART 3 – EXECUTION

3.01 GENERAL

A. Adequately bypass flow around the affected section of the Work, even instantaneous peak flows, without damage or overflow. Be aware of potential large instantaneous flow contributors connected to the storm drain under repair.

B. Allow for passage of traffic. Protect bypass piping at driveway and street crossings.

C. Maintain roadway drainage system during precipitation events to prevent flooding of public right-of-way and adjacent properties.

1. Protect against surcharging of the existing system upstream during dry weather and wet weather flows.

2. Protect Site from flooding. Provide measures to adequately isolate the Site from backflow of adjacent waterways to provide dry working conditions.

B. Continuously monitor bypass operations regardless of duration or timing of bypassing.

C. Coordinate bypassing with low-flow times, to the extent feasible. Ensure no overflows or backups occur.

D. Temporary damming of waterways is not allowed.

E. If it is determined that bypass pumping is not required at a location due to lack of flow or that a Work item does not require bypass pumping to be performed, and the decision is agreed upon by the Engineer, provide protection of flows from any construction debris and ensure that no debris enters the storm drain system.

F. Bypass Pumping

1. Bypass storm drain pumping: a typical manhole to manhole or catch basin to manhole bypass pumping setup.

2. Bypass sewage pumping: a typical manhole to manhole bypass pumping setup.

3. Submit a bypass plan to Engineer prior to implementation of such Work and prior to the start of construction.

G. Restore normal service to entire system at the end of normal working hours every day or post an attendant on site.

H. Repair any damage that occurs to existing pipes and structures to the satisfaction of the Engineer.

I. Temporary Bypass will be considered incidental to the Work to be performed, unless otherwise indicated.

3.02 FLOW DATA

A. The entire project area consists of active storm drains; therefore, flows and flow data are variable depending on location, weather conditions and potential tidal influence. Maintain flows as specified under all flow conditions and, therefore, visiting areas of the Site prior to Work to visually inspect flow conditions is encouraged.

B. Portions of the Project are potentially subject to tidal infiltration and inflow. Account for tide elevations, tide cycles, and tidal I/I volume in the planning and conduct of the Work.

C. Portions of the Work are subject to groundwater inflow. Account for groundwater infiltration in the planning and conducting the Work.

3.03 TEMPORARY POWER

A. Provide fuel and / or power to run all pumps associated with the bypass at no additional cost to the Owner. Include emergency backup power or backup fuel storage as part of the Bypass Pumping Plan.

3.04 PIPING

A. Lay temporary piping along the general lines of the street in a manner that causes the minimum amount of disruption and is least likely to be damaged. Make provisions at driveways, provisions to permit property owners to drive over the temporary pipe by use of temporary bituminous pavement, cold patch, or other approved material to form a ramp on each side of the pipe to the satisfaction of the Engineer or by depressing the pipe as directed by the Engineer.

3.05 OPERATION AND MAINTENANCE

A. Attend to the bypass system at all times. Provide an attendant if bypass pumping must continue past working hours.

END OF SECTION

SECTION 02 41 14

SELECTIVE SITE DEMOLITION AND RESTORATION

PART 1 – GENERAL

1.01 SUMMARY

A. Section Includes

1. Site demolition including clearing, stripping and/or ordinary excavation of existing bituminous or cement concrete pavements, soils, foundations, bituminous or cement concrete curbs, bituminous or cement concrete sidewalks, grassed areas, demolition, dismantling, replacement/restoration Work, stacking of reusable and disposal of waste/surplus materials and tree protection and removal in accordance with this Section and applicable reference standards listed in Article 1.03.

1.02 PRICE AND PAYMENT PROCEDURES

A. Measurement and payment requirements: per Division 01 General Requirements.

1.03 REFERENCES

A. Reference Standards

1. MassDOT Standard Specifications and Supplements, except for Compensation sections

2. MassDOT Construction Details

3. MUTCD and Mass Amendments

4. Applicable portions of City of Quincy Code of Ordinances and Zoning Ordinances

1.04 ADMINISTRATIVE REQUIREMENTS

A. Coordination, Sequencing, and Scheduling: per Division 01 General Requirements.

1.05 SUBMITTALS

A. Submit in accordance with the Division 01 General Requirements.

B. Closeout and Maintenance Material Submittals: per Division 01 General Requirements.

1.06 QUALITY ASSURANCE

A. Provide in accordance with Division 01 General Requirements.

1.07 DELIVERY, STORAGE, AND HANDLING

A. Provide in accordance with Division 01 General Requirements.

1.08 SITE CONDITIONS

A. Existing Conditions: per Division 01 General Requirements.

PART 2 – PRODUCTS (NOT USED)

PART 3 – EXECUTION

3.01 GENERAL

A. Perform selective Site demolition in accordance with Section 100 of the MassDOT Standard Specifications and the Drawings.

B. Comply with the General Requirements for temporary construction controls and protections and waste disposal.

1. Ensure against damage or injury to buildings, occupants, and adjacent property from falling debris or other causes. Avoid damage to adjacent areas, facilities, and appurtenances.

2. Maintain free and safe passage to and from the Site.

3. Legally dispose of waste, surplus and unsatisfactory materials including bituminous/cement concrete, debris, rails and ties, common excavation, cold planning, and reclamation, immediately as it accumulates during the course of the clearing, grubbing, stripping, demolition, and other Site preparation. Burying is not allowed.

3.02 SITE DEMOLITION

A. Clear the Site of construction debris and waste materials, including grass, bushes, trees, broken concrete, pipes, lumber and steel pieces, rags and plastics, within the limits of Work as shown on the Drawings or as directed.

B. Strip and/or excavate existing bituminous or cement concrete pavements, soils, foundations, bituminous or cement concrete curbs, bituminous or cement concrete sidewalks, grassed areas.

C. Remove and stockpile lamp posts, letter boxes, signs, guard rail, bike racks, and poles and other usable materials to be reinstalled.

D. Demolish and remove existing bituminous pavement, bituminous and concrete walkways and curbing, grass borders and landscaping, bushes, shrubs, trees and vegetation as necessary to construct the site and drainage improvements. Remove existing obstructions and debris, cut trees, bushes, root stumps, waste stones, wood, lumber, metal, plastic, and other unsuitable materials above, at or below grade that may interfere with or obstruct the new Work, whether or not shown on the Drawings.

E. Remove and stockpile top soil, vertical granite curbs and curb stones, utility castings and other materials for reuse as shown or as directed by the Engineer.

F. Stockpile recovered materials acceptable to the Engineer to be reused on the Project and protect against damage or deterioration.

G. Do not cut, remove, destroy or trim trees and shrubs unless specifically marked or permitted. Do not remove tree branches using excavating equipment. Provide that required trimming is performed by a licensed arborist.

1. Remove, store, and protect trees designated on the Drawings per MassDOT Standard Specification and Supplements Section 771.

2. Protect trees or vegetation outside the limits of the Work area.

3. Tree Removal

a. Cut existing trees and expose by excavation, remove and/or cut, as required, the tree stumps and root systems as shown on the drawings and as directed. Remove and dispose of tree stumps, roots, organic matter and unsuitable materials resulting from the operation.

b. Excavation around tree: not to exceed the width of the sidewalk.

c. Depth of excavation for stump removal: not to exceed 5 feet.

d. Depth of excavation for removal of a tree root system: not to exceed 2 feet.

e. Cut clean and remove root system encountered within the limits of sidewalk width as determined by the Engineer. Paint cut surfaces of the remaining detached roots with stump rot. Clean and paint tree roots still attached to the trunk with two coats of an approved chemical root guard to protect the tree from later damage.

f. Transport and carefully stack existing tree grates in good condition and not needed for the Project at the DPW yard or dispose of at no additional cost to the Owner, as directed by Engineer.

H. Protect integrity of remaining structures, appurtenances and equipment during demolition, removal and alteration to existing structures, appurtenances, utility pipes, castings, fences, walkways, posts, stairs and other physical features.

I. Maintain slopes longitudinally and laterally to ensure proper and continuous drainage. Field adjust sidewalk and roadway gutter grades at driveways and side street intersections to be consistent with the existing drainage pattern and provide for an appropriate transition between the new and the existing (side streets and driveways) pavement surfaces at intersections.

J. If cobblestones are encountered, carefully stack the excavated cobblestone at the City's DPW Yard at no additional cost to the City.

K. Leave abandoned underground piping in place, plug or cap and fill with flowable control density fill. Remove or cut abandoned underground piping castings a minimum 12 inches below the finished surface and the area backfilled.

L. Cut sections of piping to be removed to the nearest solid support or provide appropriate new supports and cap each of the remaining ends before backfilling unless noted on the Drawings or specifically directed by the Engineer.

M. Cut openings in existing masonry work to provide for a suitable bond, and clean, square and plumb openings for installation of new Work. Thoroughly clean cut surfaces of loosened materials.

3.03 SAWCUTS IN EXISTING PAVEMENTS AND SIDEWALKS

A. Neatly saw-cut edges of excavations in existing pavements and sidewalks along either a straight line or design curved line as shown in the Drawings. Ragged, uneven edges are not acceptable.

B. Saw cut existing pavement through its full depth, or to the elevation of the abutting proposed pavement subgrade, whichever is lesser, at joints between existing and proposed pavements, and at utility trenches through existing pavement to remain, to provide a uniform, vertical surface for the proposed pavement joint with the existing pavement.

C. Neatly saw cut edges that become broken, ragged or undermined with a minimum disturbance to remaining pavements or sidewalks prior to the placement of abutting proposed pavement.

D. In areas where an existing concrete sidewalk abuts a building, wall or storefront, and the sidewalk is to be reconstructed or removed, saw cut the existing sidewalk a minimum of 6 inches from the building wall or storefront unless otherwise directed by the Engineer.

E. Spray or paint saw cut surfaces with a uniform thin coat of RS-1 asphalt emulsion immediately before placement of hot mix asphalt material against the surface.

3.04 REPAIR, REPLACEMENT AND RESTORATION

A. Match materials of repair and/or restoration to existing adjacent surfaces in finish and texture as closely as possible. Make joints between new and existing Work inconspicuous.

B. Replace or restore items damaged, dislocated and/or dismantled such as walls, fences, lamp posts, letter boxes, masonry boundary walls, City signs, poles, bollards, curb stones, markers, trees, bushes, grassed areas, walkways, stairs/steps, benches, outside lighting and other amenities and physical features designated to remain, to conditions that existed prior to the start of construction.

C. Reinstall fencing removed as shown with new posts as necessary per MassDOT Standard Specifications and Supplements Section 665.

1. New posts: per MassDOT Standard Specification and Supplements Section 600 and Section M8.09.0

D. Re-plant trees designated on the Drawings per MassDOT Standard Specification and Supplements Section 771 and Section 329000.

3.05 CLOSEOUT ACTIVITIES

A. Provide in accordance with Division 01 General Requirements.

END OF SECTION

This page intentionally left blank

SECTION 02 41 15

DRAINAGE STRUCTURE REMOVAL

PART 1 – GENERAL

1.01 SUMMARY

A. Section Includes

1. Removal of drainage structures in accordance with this Section and applicable reference standards listed in Article 1.03.

1.02 PRICE AND PAYMENT PROCEDURES

A. Measurement and payment requirements: per Division 01 General Requirements.

1.03 REFERENCES

A. Reference Standards

1. MassDOT Standard Specifications and Supplements, except for Compensation sections

2. MassDOT Construction Details

3. Applicable portions of City of Quincy Code of Ordinances and Zoning Ordinances

1.04 ADMINISTRATIVE REQUIREMENTS

A. Coordination, Sequencing, and Scheduling: per Division 01 General Requirements.

1.05 SUBMITTALS

A. Submit in accordance with the Division 01 General Requirements.

B. Closeout and Maintenance Material Submittals: per Division 01 General Requirements.

1.06 QUALITY ASSURANCE

A. Provide in accordance with Division 01 General Requirements.

1.07 SITE CONDITIONS

A. Existing Conditions: per Division 01 General Requirements.

PART 2 – PRODUCTS (Not Used)

PART 3 – EXECUTION

3.01 REMOVAL

A. Remove structures identified in accordance with Section 140 of the MassDOT Standard Specifications and the Drawings.

B. Remove and stack castings (frames, covers and grates).

1. Transport and stack castings in good condition at the City DPW yard.

2. Legally dispose of castings deemed not serviceable by Engineer at no additional cost.

C. Plug inlets and outlets and remove masonry and concrete.

D. Fill cavity with control density fill specified in Section 31 00 00.

3.02 CLOSEOUT ACTIVITIES

A. Provide in accordance with Division 01 General Requirements.

END OF SECTION

SECTION 05 52 00

METAL RAILINGS

PART 1 – GENERAL

1.01 SUMMARY

A. Section Includes

1. Provide metal handrails in accordance with this Section and applicable reference standards listed in Article 1.03.

1.02 PRICE AND PAYMENT PROCEDURES

A. Measurement and payment requirements: per Division 01 General Requirements.

1.03 REFERENCES

A. Reference Standards

1. Applicable portions of City of Quincy Code of Ordinances and Zoning Ordinances

2. AWS D1.1 "Structural Welding Code".

1.04 ADMINISTRATIVE REQUIREMENTS

A. Coordination, Sequencing, and Scheduling: per Division 01 General Requirements.

1.05 SUBMITTALS

A. Submit in accordance with the Division 01 General Requirements.

1. Product Data: manufacturer's specifications, anchor details and installation instructions including paint products.

2. Manufacturer Instructions.

3. Shop Drawings: plans, elevations and details of sections and connections. Show anchorage and accessory items. Provide templates for anchor and bolt installation. Take field measurements prior to preparation of Shop Drawings and fabrication, where possible. Allow for trimming and fitting where taking field measurements before fabrication might delay Work.

B. Closeout and Maintenance Material Submittals: per Division 01 General Requirements.

1.06 QUALITY ASSURANCE

A. Provide in accordance with Division 01 General Requirements.

1.07 DELIVERY, STORAGE, AND HANDLING

A. Provide in accordance with Division 01 General Requirements.

1.08 SITE CONDITIONS

A. Existing Conditions: per Division 01 General Requirements.

PART 2 – PRODUCTS

2.01 GENERAL

A. Use only materials which are smooth and free of surface blemishes including pitting, seam marks, roller marks, rolled trade names and roughness.

2.02 MATERIALS

A. Steel Plates, Shapes and Bars: ASTM A 36.

B. Steel Pipe: ASTM A 53, Grade B.

C. Brackets, Flanges: Cast or formed metal of the same type material and finish as supported rails, unless otherwise indicated.

D. Galvanizing Repair Paint: high-zinc-dust-content paint for regalvanizing welds in galvanized steel, with dry film containing not less than 94 percent zinc dust by weight, and complying with DOD-P-21035 or SSPC-Paint-20.

2.03 GENERAL FABRICATION

A. Steel railing shall be formed of 1-1/2 inch round steel pipe in all welded construction. Posts and rails shall be Schedule 40. All welds shall be continuous at all intersections and ground smooth on all exposed areas. Radius corners shall be used. Where intersections occur, pieces shall be shaped and cut to fit, no distortion of the circular shape will be allowed. Railing shall be furnished in the largest practical sections with the locations and details of field connections indicated on the shop drawings. Close exposed ends of railing members.

B. Post spacing shall be a maximum of four (4) feet on centers measured along the rail. Posts shall be single, unspliced pipe length. Lower rails shall be single, unspliced length between posts. Top rails shall be continuous.

C. The upper rail at platforms and other level runs shall be forty-two (42) inches from the top of rail to floor. On stair flights, the upper rail shall be forty-two (42) vertical inches from the top of rail to a line connecting the toes of the treads. At level runs and at stairs, the lower rail shall be located at approximately half the height of the upper rail. On stairs an additional (third) rail, forming a handrail, shall be bracketed off of the vertical posts: the handrail height shall be thirty-four (34) vertical inches from the upper surface to a line connecting the toes of the treads.

D. Design and anchorage of all railing shall be such that the completed structure shall be capable of withstanding the loads prescribed by the Building Code of the Project state.

E. Railing shall be hot-dip galvanized per ASTM A 123/A 123M after fabrication.

F. Work to dimensions shown or accepted on Shop Drawings.

G. Weld corners and seams continuously, complying with AWS recommendations. At exposed connections, grind exposed welds smooth and flush to match and blend with adjoining surfaces.

H. Provide for anchorage of type shown, coordinated with supporting structure. Fabricate and space anchoring devices to provide adequate support for intended use.

I. Fabricate joints which will be exposed to weather in a manner to exclude water or provide weep holes where water may accumulate.

J. Clearly mark units for coordinated installation.

2.04 GALVANIZING

A. All items specified as galvanized shall be coated by the hot-dip process in accordance with ASTM A 123/A 123M in molten zinc, producing a continuous coating of uniform thickness of weight required by the referenced specifications.

B. Coating shall be of best commercial quality, free from injurious defects, flux and uncoated spots, and of such quality as will endure, without penetration of the coating, not less than four (4) immersions in copper sulfate in conformance with ASTM A 239.

C. A stamp showing the name of the galvanizer, the weight of the coating, and applicable ASTM compliance shall identify all galvanized items.

D. Galvanized steel to be painted shall not be quenched; it shall be phosphatized, and prepared for painting per ASTM D 6386.

E. At locations where galvanized steel is field cut and at other locations where galvanized coating is removed, the steel surface shall be touched up with specified galvanizing repair paint.

2.05 SOURCE QUALITY CONTROL

A. Provide in accordance with Division 01 General Requirements.

PART 3 – EXECUTION

3.01 PREPARATION

A. Coordinate and furnish anchorages, setting drawings, diagrams, templates, instructions, and directions for installation of anchorages, such as anchor bolts. Coordinate delivery of such items to Project Site.

3.02 INSTALLATION

A. Assemble fabrications shipped at the Site with concealed mechanical expansion fasteners.

1. Perform cutting, drilling and fitting required for installation. Set Work accurately in location, alignment and elevation, plumb, level, true and free of rack, measured from established lines and levels.

2. Fit exposed connections accurately together to form tight hairline joints. Grind exposed joints smooth. Do not weld, cut or abrade the surfaces of exterior units which have been hot-dip galvanized after fabrication, and are intended for bolted field connections.

3. Comply with AWS Code for procedures of manual-shielded metal-arc welding, appearance and quality of welds, and methods used in correcting welding work.

3.03 TOUCH-UP PAINTING

A. Immediately after erection, clean field welds, bolted connections, and abraded areas of shop paint, and paint exposed areas with galvanizing repair paint. Apply by brush or spray to provide a minimum dry film thickness of 3.0-5.0 mils.

3.04 CLOSEOUT ACTIVITIES

A. Provide in accordance with Division 01 General Requirements.

END OF SECTION

SECTION 31 00 00

EARTHWORK

PART 1 – GENERAL

1.01 SUMMARY

A. Section Includes

1. Provide excavating, filling, backfilling, stockpiling, bedding, compacting, grading, protection, installation and removal of support of excavation and other Work necessary for the construction of surface improvements, pipelines, structures, pavements, and appurtenant Work in accordance with this Section, the Drawings and applicable reference standards listed in Article 1.03.

1.02 PRICE AND PAYMENT PROCEDURES

A. Measurement and payment requirements: per Division 01 General Requirements.

1.03 REFERENCES

A. Reference Standards

1. MassDOT Standard Specifications and Supplements, except for Compensation sections

2. MassDOT Construction Details

3. ASTM D1556: Density and Unit Weight of Soil in Place by the Sand-Cone Method

4. ASTM D1557: Laboratory Compaction Characteristics of Soil Using Modified Effort

5. ASTM D2922: Density of Soil and Soil Aggregate in Place by Nuclear Methods (Shallow Depth)

6. Applicable portions of City of Quincy Code of Ordinances and Zoning Ordinances

1.04 ADMINISTRATIVE REQUIREMENTS

A. Coordination, Sequencing, and Scheduling: per Division 01 General Requirements.

1.05 SUBMITTALS

A. Submit in accordance with the Division 01 General Requirements.

1. Product Data

B. Closeout and Maintenance Material Submittals: per Division 01 General Requirements.

C. Test Reports

1. Material gradations

2. Backfill material moisture-density relationships

3. Field compaction testing

1.06 QUALITY ASSURANCE

A. Provide in accordance with Division 01 General Requirements.

1.07 DELIVERY, STORAGE, AND HANDLING

A. Provide in accordance with Division 01 General Requirements.

1.08 SITE CONDITIONS

A. Existing Conditions: per Division 01 General Requirements.

PART 2 – PRODUCTS

2.01 MATERIALS

A. Pipe and Structure Bedding: 3/4 inch sized crushed stone; durable, clean angular rock fragments obtained by breaking and crushing rock material meeting the criteria of the M2.01.4 of the MassDOT Standard Specifications and Supplements for bedding beneath pipe and structures, to 6 inches above the crown of the pipe:

B. Suitable Backfill: well-graded granular material, of which at least 25 percent by weight shall be retained on the #40 sieve and contain less than 20 percent finer than a #200 sieve by weight, predominantly free from organic matter, man-made materials, ice, snow or other deleterious material and have characteristics so it can be readily placed and compacted. Place 6 inches above the crown of the pipe and around structures 6 inches above the crown of the highest pipe and up to the underside of the pavement section.

C. Structural Fill: material below miscellaneous structures, free from ice and snow, roots, sod, rubbish and other deleterious or organic matter, containing no stone

greater than 2/3 the loose lift thickness and having suitable moisture content to allow for proper compaction as specified in Paragraph 3.06 of this Section. Unsuitable structural fill: soil that is too wet for proper compaction.

Gradation:

Sieve Size	Percent Passing by Weight
2/3 of loose lift thickness (6-inch max)	100
#10	30-95
#40	10- 70
#200	0- 8

D. Sand: Sieve analysis by weight:

Sieve Size	Percent Passing by Weight
3/8-inch	100
#4	95-100
#16	50-85
#100	2-10

E. 3/4 Inch Crushed Stone: Durable crushed rock or crushed gravel stone; free of ice, snow, sand, silt, clay, loam, shale, or other deleterious matter; graded within the following limits:

Sieve Size	Percent Passing by Weight
1 inch	100
3/4 inch	90-100
1/2 inch	10-50
#4	0-5
#200	Less than 1

F. Gravel Borrow: processed gravel for backfill per M1.03.1 of the MassDOT Standard Specifications and Supplements, consisting of inert material that is hard, durable stone and coarse sand, free from loam and clay, surface coatings and deleterious materials. Coarse aggregate percentage of wear: not more than 50 by the Los Angeles Abrasion Test.

Gradation:

Sieve Size	Percent Passing by Weight
3 inch	100
1-1/2 inch	70-100
3/4 inch	5-85
#4	30-60
#200	0-10

G. Controlled Density Fill (CDF) (Flowable Fill): excavatable and used to limit settlement, lateral movement, undermining, washout and other hazards created by earthwork operation as shown on the Drawings and when excavating around structures, utilities, sidewalks, pavements, and other facilities. Batch CDF at concrete plant.

1. Portland Cement: AASHTO M85.

2. Fly Ash: AASHTO M4.05.02.

3. Sand: M4.02.02 of MassDOT Standard Specifications and Supplements.

4. Water: M4.02.04 of MassDOT Standard Specifications and Supplements.

5. Air Entraining Admixture: M4.02.05 of MassDOT Standard Specifications and Supplements.

6. Compressive Strength: 28 day = 30-80 psi, 90 day = 100 psi

7. Slump: 10 - 12 inches

H. Unsuitable materials: material containing excessive clay, vegetation, organic matter, debris, pavement, stones or boulders over 6-inches in greatest dimension, and frozen material and will not provide a suitable foundation or structural support for the pipe or material unsuitable for use in backfill.

2.02 SHORING AND BRACING MATERIALS

A. Provide suitable shoring and bracing materials to support loads imposed. Materials may be used and in serviceable condition and are subject to inspection and approval of the Engineer once delivered to the Site

2.03 SOURCE QUALITY CONTROL

A. Provide in accordance with Division 01 General Requirements.

PART 3 – EXECUTION

3.01 SITE MONITORING

A. Before starting Work, check and verify governing dimensions and elevations. Survey condition of adjoining properties with Engineer. Take digital video recording any prior settlement or cracking of structures, pavements and other improvements. Prepare a list of such damages, verified by and signed by Contractor, Engineer, and others conducting the investigation.

B. Coordinate survey. Establish exact elevations at fixed points to act as benchmarks. Clearly identify benchmarks and record existing elevations. Locate datum level used to establish benchmark elevations sufficiently distant so as not to be affected by excavation operations.

C. During excavation, resurvey benchmarks weekly, employing licensed Land Surveyor or registered Professional Engineer. Maintain accurate log of surveyed elevations for comparison with original elevations. Notify Engineer if changes in elevations occur or if cracks, sags or other damage is evident.

3.02 SHORING AND BRACING

A. If, in the sole opinion of the Engineer, materials used for shoring and bracing are not suitable for use on the Project, immediately remove the materials from the Site if rejected by Engineer.

3.03 EXCAVATION

A. Remove materials encountered to the limits shown on the Drawings, designated in the Specifications or as required by the Owner.

1. Do not perform excavation below normal grade to remove and replace unsuitable materials until approved by the Engineer.

2. Do not perform excavation of rock, boulder or unsuitable materials until material to be excavated has been cross-sectioned and classified by Engineer.

B. Earth Excavation: removal and disposal of pavements, curbing and other obstructions visible on ground surface, underground structures and utilities indicated to be demolished and removed, and other materials encountered that are not classified as rock excavation or unauthorized excavation. Legally dispose of surplus materials resulting from excavation and not needed for use on the Project, as determined by the Engineer. Obtain necessary permits for legal disposal of surplus material.

C. Excavation in Asphalt Pavement Areas

1. Saw cut or mill to full depth through existing pavement prior to any excavation for pipe or structure placement. Minimize disturbance of remaining pavement. Cut and remove the minimum amount of pavement required to do the Work.

2. Use shoring and bracing where sides of excavation will not stand without undermining pavement.

3. Keep material and soil stockpiles a minimum 10 feet back from the edge of excavation, or in accordance with the approved support of excavation design, to avoid overloading of the sides of excavation and prevent slides or cave-ins.

4. Remove and dispose of existing pavements in the course of the Work. Take care to avoid mixing existing pavement material with excavation material to be used for backfill.

D. Excavation for Trenches

1. Excavate to widths shown on the Drawings.

2. Produce an evenly graded flat trench bottom at the subgrade elevation required for installation of pipe and bedding material.

3. Load excavated material directly into trucks unless otherwise permitted by the Engineer.

4. Place backfill material directly into trench or excavation. Do not stockpile material to be used as backfill in roadways.

E. Unauthorized Excavation: removal of materials beyond indicated subgrade elevations or dimensions without specific direction of Engineer. Unauthorized excavation, as well as remedial work directed by Engineer including refilling, is at no additional cost to Owner.

1. Refilling Unauthorized Excavation

a. Trenches: Use 3/4-inch crushed stone and stabilization fabric as a separator material, if necessary, as directed by Engineer.

b. Elsewhere: Backfill and compact unauthorized excavations as specified for authorized excavations of same classification, unless otherwise directed by Engineer.

F. Excavation Below Normal Grade: When excavation has reached required subgrade elevations, notify Engineer who will make an inspection of conditions. If unsuitable bearing materials, as defined in Paragraph 2.01 above, are encountered at required subgrade elevations, carry excavations deeper as directed by Engineer and replace excavated material with crushed stone or as directed by the Engineer.

G. Excavation Above Normal Grade: If unsuitable materials, as defined in Paragraph 2.01 above, are encountered above normal grade, remove the unsuitable material and dispose of and do not use as backfill on any portion of the Project, unless otherwise approved by the Engineer. Use suitable stockpiled material approved by the Engineer, to replace the unsuitable material to backfill the trench to the dimensions for pipe and structure bedding and backfill as shown on the Drawings. If suitable stockpile material is not sufficient to backfill the trench to required dimensions, use gravel borrow to complete the trench backfill to the elevation shown for pipe and structure backfill. Furnish and install stockpiled material and gravel borrow at no additional cost to Owner.

H. Material Storage

1. Stockpile and maintain suitable surplus excavated materials for re-use as backfill anywhere within the Project limits as directed by the Engineer. Place, grade, and shape stockpiles for proper drainage. Cover stockpiles when unused to limit infiltration by precipitation.

2. Provide erosion controls around stockpile areas as required by the local Conservation Agent and/or the Engineer at no additional cost to Owner.

3. Locate and retain soil materials at least 10 feet away from edge of excavations or as allowed approved support of excavation design.

3.04 SHORING AND BRACING

A. General

1. Provide temporary sheeting, shoring, and bracing in locations where required to protect excavated areas as required for safety or compliance with OSHA and Laws and Regulations per Section 00 73 19, at no additional cost to the Owner. If the Engineer is of the opinion that at any point sufficient or proper supports have not been provided, additional supports may be ordered to be placed at no additional cost to the Owner. Compliance with such order shall not relieve the Contractor from responsibility for the sufficiency of such supports.

2. In no case should slope height, slope inclination, or excavation depth, including utility trench excavation depth, exceed those specified in local, state and federal safety Law and Regulations per Section 00 73 19. As a minimum, follow the current OSHA Health and Safety Standards for Excavations, 29 CFR Part 1926.

3. Provide system to resist earth and hydrostatic pressures, including surcharges from surface loads.

4. Maintain shoring and bracing while excavation is open.

5. If not leaving in place, remove systems in stages to prevent disturbance of soils and damage to structures and improvements. Fill voids as soon as sheeting is withdrawn.

B. Provide shoring and bracing designed by a Massachusetts Registered Professional Engineer to protect existing buildings, utilities, and other improvements and excavation against movement due to caving and to meet safety requirements of OSHA and Laws and Regulations per Section 00 73 19 for shoring and bracing.

1. Wood Sheeting and Bracing: used as needed to make excavation safe and secure. Leave wood sheeting in place.

2. Steel Sheet Piling: to be removed following completion of Work or remain in place when directed by the Engineer. Drive sheet piling prior to excavation where possible. Fill and compact voids outside sheeting to hold sides of excavation in place.

   Steel sheet piling may be left in place at the Contractor's option if approved by the Engineer and at no additional cost to the Owner. Cut off sheet piling to be left in place at least 5 feet below finish grade or less if directed by the Engineer.

3. Movable box: used where a shoring system is required but steel piling is not called for as determined by Contractor as not all areas of Work will be conducive to the use of a movable box.

3.05 DEWATERING

A. Provide in accordance with Division 01 General Requirements.

3.06 BACKFILL AND FILL

A. Do not backfill excavations and trenches until new utilities have been inspected and, if required, tested satisfactorily for conformance with the Drawings and Specifications unless directed otherwise by the Engineer. Place acceptable soil material in layers to required elevations as shown on the Drawings or as specified. Fill, backfill, and compact in accordance with this Section to produce minimum subsequent settlement of the material and provide adequate support for the surface treatment or structure to be placed on the material. Place material in approximately horizontal layers beginning at lowest area to be filled. Do not impair drainage. Replace fill that becomes frozen or saturated in stockpiles with suitable off-Site fill at no additional cost to Owner.

B. Ground Surface Preparation

1. Remove asphalt and concrete pavements, granular base course, existing sandy and gravelly fills, existing organic silty/clay soils, organic peat, vegetation, debris, unsatisfactory soil materials, obstructions, and deleterious materials from ground surface to excavation subgrade prior to placement of fills. Scarify surfaces so that fill material will bond with existing surface.

2. When existing ground surface has a density less than that specified under Article 3.07, Compaction, for particular area classification, break up ground surface, pulverize, moisture-condition to optimum moisture content, and compact to required depth and percentage of maximum density.

C. Placement

1. Place backfill and fill materials in layers not more than 6 inches in loose depth for material compacted by heavy compaction equipment or hand-operated tampers. Do not place backfill or fill material on surfaces that are muddy, frozen, or contain frost or ice.

2. Place backfill and fill materials evenly adjacent to structures, to required elevations. Take care to prevent wedging action of backfill against structures by carrying material uniformly around structure to approximately same elevation in each lift.

3. Do not allow heavy machinery within 5 feet of structure during backfilling and compacting.

D. Backfilling Excavations

1. Backfill excavations promptly as Work permits, but not until completion of the following:

   a. Inspection and recording locations of underground utilities

   b. Removal of concrete formwork

   c. Removal of shoring and bracing, and backfilling of voids with satisfactory materials

   d. Removal of trash and debris

2. Use care in backfilling to avoid damage or displacement of underground structures and pipe.

3. Backfill under existing utility pipes crossed by new utility pipes with CDF. The CDF will extend continuously from the bedding of the new pipe to the utility pipe crossed, including a 6-inch thick envelope of CDF around the existing utility pipes.

4. Backfill with CDF when clearance between proposed structure and existing structure is 18 inches or less and sufficient clearance is not provided to obtain suitable compaction, in the opinion of the Engineer.

5. Backfill with CDF for trenches within impervious surfaces with pipes containing less than 3 feet of cover.

6. Provide that 3/4 inch crushed stone backfill stands at its own angle of repose. "Haunching" or "forming" with common fill is not allowed.

E. Backfilling Trenches

1. See Trench Detail on the Drawings.

2. Place pipe and structure bedding and gravel bedding to the extent and dimensions shown on the Drawings so that the pipes and structures have complete and uniform bearing.

3. Grade, compact and shape pipe and structure bedding so that the full length of pipe barrel has complete and uniform bearing. Dig bell holes and depressions for joints after the bedding has been graded and compacted, at proper clearance for jointing the pipes.

4. Following inspection and approval of pipe installation by Engineer, carefully hand place and properly compact additional approved bedding to the limits shown on the Drawings. Hand or mechanical tamping on the sides of the pipe.

5. Place 6 inches of suitable backfill in trenches above the crown of pipe as approved, not frozen and without stones larger than 3 inches in the greatest dimension. Spread in layers not exceeding 6 inches in loose thickness and compact each layer by at least 4 passes with an approved vibratory compactor. See Article 3.07 for compaction types and standards. Carefully place trench backfilling to avoid disturbance of new Work and of existing structures. Adjust moisture content of backfill to allow for proper compaction.

6. Bed pipe in pipe and structure bedding (sand for pile supported concrete slabs and 3/4-inch crushed stone for un-supported pipes except where otherwise indicated). Limits of bedding and requirements for remaining trench backfill are shown on the Drawings.

7. Trenches in cross-country runs: Restore surface to that existing prior to construction, as shown on the Drawings, or required by the Engineer. Mound trench 6 inches above existing grade or as required by the Engineer.

3.07 COMPACTION

A. Use methods which produce the required degree of compaction throughout the entire depth of material placed without damage to new or existing facilities and which are approved by the Engineer. Adjust moisture content of soil as required. Remove and replace material which is too wet to compact to required density. Compact each layer as Work progresses.

Compaction Method	Maximum Stone Size	Maximum Loose Lift Thickness		Minimum Number of Passes	
		Below Pavement	Less Critical Areas	Below Pavement	Less Critical Areas
Hand-operated vibratory plate or light roller in confined areas	4 inches	6 inches	8	4	4
Hand-operated vibratory drum rollers weighing at least 1,000 lbs. in confined areas	6 inches	10 inches	12 inches	4	4
Light vibratory drum roller min. weight at drum 5,000 lbs., min. dynapac force 10,000 lbs.	8 inches	6 inches	18 inches	4	4
Medium vibratory drum roller min. weight at drum 10,000 lbs., min. dynapac force 20,000 lbs.	8 inches	6 inches	24 inches	6	6

B. Degree of Compaction (minimum densities):

Fill and Backfill Location	Density
Top 3 feet under pavement grade	95% of max.
Below top 3 feet under pavement grade	92% of max.
Pipe Bedding	92% of max.
Beside structure foundation walls	90% of max.
Maximum density:	ASTM D1557, modified
Field density tests	ASTM D1556 (sand cone) or ASTM D2922 (nuclear methods)

Note: Fill that is too wet for proper compaction shall be disked, harrowed, or otherwise dried to proper moisture content for compaction to the required density. If the fill material cannot be dried within 48 hours of placement, remove and replace with drier fill.

C. Testing

1. Determine actual in place densities using field tests as directed by the Engineer and in accordance with Division 01 General Requirements.

2. Perform additional Work to obtain proper compaction if in-place densities do not meet the specified densities. Retesting may be required by the Engineer.

D. Minimum Number of Tests

1. Suitable Backfill: Compact backfill in maximum loose lifts per table above. For each lift make one field density test every 50 linear feet.

2. Pavement Sub base: Make at least one field density test of sub base for every 50 linear feet of paved area.

3.08 GRADING

A. Uniformly grade areas within limits of grading under this section, including adjacent transition areas. Smooth finished surface within specified tolerances, compact with uniform levels or slopes between points where elevations are shown, or between such points and existing grades.

B. Grade areas adjacent to structure lines to drain away from structures and to prevent ponding.

C. Finish surfaces: free from irregular surface changes and as follows.

1. Lawn or Other Unpaved Areas: Finish areas to receive topsoil to within not more than 0.10 feet above or below required subgrade elevations.

2. Pavements: Shape surface of areas under pavement to line, grade and cross-section, with finish surface not more than plus or minus 1 inch above or below required subgrade elevation.

D. Compaction: After grading, compact subgrade surfaces to the percentage of maximum density for each area classification.

3.09 MAINTENANCE

A. Protect newly graded areas from traffic and erosion. Keep free of trash and debris. Repair and re-establish grades in settled, eroded, and rutted areas to specified tolerances.

B. Where completed compacted areas are disturbed by subsequent construction operations or adverse weather, scarify surface, re-shape, and compact to required density prior to further construction. Immediately repair any subsequent settling and provide such maintenance for the remainder of the Contract at no additional expense to the Owner.

C. Prior to paving upon the sub-grade, remove soft or unsuitable material and replace with suitable backfill material. Bring low sections, holes, or depressions to the required grade with approved material. Shape entire sub-grade to line, grade, and cross section and thoroughly compact.

D. Provide erosion control measures in accordance with Laws and Regulations and in accordance with Division 01 General Requirements. Keep roads free of debris. Use suitable watertight vehicles for hauling wet materials over roads and streets. Clean up materials dropped from or spread by vehicles promptly or when directed by the Engineer.

3.10 DISPOSAL OF EXCESS MATERIALS

A. Legally dispose of excess or unsuitable material at no additional cost to Owner.

3.02 CLOSEOUT ACTIVITIES

A. Provide in accordance with Division 01 General Requirements.

END OF SECTION

SECTION 31 23 16.16

ROCK REMOVAL

PART 1 - GENERAL

1.01 SUMMARY

A. Rock excavation shall consist of the removal of intact bedrock, and boulders or detached bedrock fragments which have a volume of 1 cubic yard or more, the removal of which, in the opinion of the Engineer, can be accomplished only by employing hydraulic splitters, air rams, paving breakers, or other similar mechanical methods. Removal of boulders and detached rock fragments which have a volume of less than 1 cubic yard is considered "Earth Excavation".

B. Rock Excavation: Furnish all labor, equipment and materials, and perform all operations in connection with rock excavation as indicated on the Drawings. During excavation, protect existing pipelines, structures and appurtenant facilities.

C. Rock Excavation by mechanical means only; NO Blasting: Furnish labor, equipment, materials and incidentals required, provide services and perform operations required to fragment rock utilizing controlled mechanical techniques such that damage is prevented to adjacent pipes, structures, property and work.

1.02 QUALITY ASSURANCE

A. Persons responsible for rock excavation by mechanical means shall be licensed contractor in the Commonwealth of Massachusetts and shall have had acceptable experience in similar excavations in rock and controlled excavation techniques.

B. Contractor shall conduct a pre-rock excavation survey of all properties in the vicinity of locations where rock excavation by mechanical means is proposed in accordance with Section 1.04 below.

1.03 SUBMITTALS

A. Qualification Statements:

1. Documentation of experience in at least 5 projects in the past 5 years, with references, on projects of similar size and complexity for the following:

   a. Written evidence of the licensing, experience and qualifications of the rock excavation contractor who will be directly responsible for the rock removal operations.

B. Contractor's rock excavation sub-contractor shall provide proof of bonding and insurance.

C. Field QC Submittals:

1. Record the pre- rock excavation condition survey consisting of written documentation and photographs of the conditions identified, with appropriate audio description of conditions and defects. Prior to start of work, two copies of the Contractor's record of the pre- rock excavation condition survey shall be submitted to the Engineer for the record.

1.04 SITE CONDITIONS

A. Before starting rock excavation, a recognized and acceptable vibration consultant with a Professional Engineering License who shall have a minimum of 10 years' experience in their specialty shall conduct a pre-blast condition survey of all existing structures and conditions on the site, adjacent to the site, or in the vicinity of the site. This survey shall extend 250 feet in all directions of the centerline of the trench, where rock excavation is to take place. As a minimum, take color photographs and DVD quality videos with the date imprinted on the photographed image of each room (including basement) for each structure in the preconstruction survey area for which a survey is performed. Two copies of each photograph and DVD video shall be submitted to the Engineer at least 7 days prior to the start of any rock excavation work.

1. Coordinate activities, issue notices, obtain clearance and provide whatever photographic and secretarial assistance is necessary to accomplish the survey.

2. Give notice, in writing, to the Owner of the property concerned, occupants of the property and any representative of local authorities required to be present at such survey. Advise in advance, the dates on which surveys are to be made so that they may have representatives present during the examination. Provide copies of all the notices to the Owner and Engineer.

B. Observations shall be recorded during the survey of the existing conditions for each structure, which may be affected by the construction operations.

1. The survey shall consist of a description of the interior and exterior condition of the various structures examined. Descriptions shall locate any cracks, damage, or other defects existing and shall include such information so as to make it possible to determine the effect, if any, of the construction operations on the defect. Where significant cracks or damage exists, or for defects too complicated to describe in words, photographs shall be taken and made part of the record.

2. The record of each property examined shall be signed by the representatives present and, if practicable, by the Owners and occupants of the property, whether or not they are present at the examinations.

PART 2 – PRODUCTS (Not Applicable)

PART 3 – EXECUTION

3.02 GENERAL

A. Notify Engineer immediately of change in classification. Should bedrock be encountered above the trench bottom grade or above the subgrade elevation, expose the bedrock surface and to allow the Engineer to perform the necessary elevation survey and take cross-sectional measurements.

B. Perform Rock Excavation by mechanical methods.

C. Boulders: Remove or partially remove boulders exposed on the sides of or in the bottom of excavations as directed by the Engineer. Remove boulders to not less than 2 feet outside structure walls, not less than 12 inches outside footings, not less than 6 inches below underslab subgrade, not less than the lateral trench width payment lines indicated, and not less than 12 inches below the underside of pipes. Depressions resulting from the removal of boulders and rock shall be refilled with approved compacted bedding. Bedding for refilling will not be paid for separately.

D. Refill unauthorized rock excavations, or excavations made beyond or below the indicated or directed excavation pay limits, with compacted bedding at no additional cost.

3.03 CLEANING

A. Remove rock fragments from excavations as directed. Remove all unsuitable material, breakage, and slides, even if located beyond the payment lines it shall be removed as directed.

B. Reuse, crush, or screen and reuse as fill fragmented rock: may be reused or crushed and/or screened and reused as fill provided such materials meeting the requirements for fill of Section 31 00 00 Earthwork.

C. Remove and dispose of unused rock and boulders off-site in accordance with applicable laws and regulations.

END OF SECTION

This page intentionally left blank

SECTION 31 32 19.16

GEOTEXTILE SOIL STABILIZATION

PART 1 – GENERAL

1.01 SUMMARY

A. Section Includes

1. Provide permanent geotextile fabrics for slope stabilization as shown on the Drawings or as directed by the Engineer in accordance with this Section and applicable reference standards listed in Article 1.03.

1.02 PRICE AND PAYMENT PROCEDURES

A. Measurement and payment requirements: per Division 01 General Requirements.

1.03 REFERENCES

A. Reference Standards

1. MassDOT Standard Specifications and Supplements, except for Compensation sections

2. MassDOT Construction Details

3. Applicable portions of City of Quincy Code of Ordinances and Zoning Ordinances

4. ASTM

1.04 ADMINISTRATIVE REQUIREMENTS

A. Coordination, Sequencing, and Scheduling: per Division 01 General Requirements.

1.05 SUBMITTALS

A. Submit in accordance with the Division 01 General Requirements.

1. Product Data

2. Samples: swatches of the fabrics.

3. Manufacturer Instructions: storage, handling, and installation

B. Closeout and Maintenance Material Submittals: per Division 01 General Requirements.

1.06 QUALITY ASSURANCE

A. Provide in accordance with Division 01 General Requirements.

1. Qualifications of geotextile manufacturer: well-established firm with more than 5 years' experience in the manufacturer of geotextile fabrics.

1.07 DELIVERY, STORAGE, AND HANDLING

A. Provide in accordance with Division 01 General Requirements and per manufacturer's instructions.

1.08 SITE CONDITIONS

A. Existing Conditions: per Division 01 General Requirements.

PART 2 – PRODUCTS

2.01 GEOTEXTILES

A. Slope Stabilization Jute Mesh: processed natural jute yarns woven into a matrix complying with the following.

PROPERTY	REQUIREMENTS	TEST METHOD
Classification	ECTC Type 3B	--
Minimum strands per foot in each direction	14–20	--
Minimum roll width	48 inches	--
Matrix	Unbleached and un dyed woven jute	--
Universal soil loss equation (USLE) C-Factor for a 1.5:1 (H:V) unvegetated slope	Less than or equal to 0.25	--
Maximum shear stress	2.0 psf	ASTM D 6460
Minimum tensile strength	100 psf	ASTM D 5035
Functional longevity	12 months	--
Average open area	65 plus or minus 5percent	--
Minimum weight of fabric	14.4–19.2 ounces per square yard	ASTM D 3776

2.02 SEWING THREAD

A. Seaming thread: polymetric with chemical and UV light resistance properties equal to or greater than the fabric itself. Color: contrasting to color of fabric.

2.03 SOURCE QUALITY CONTROL

A. Provide in accordance with Division 01 General Requirements.

PART 3 – EXECUTION

3.01 PREPARATION

A. Provide smooth graded surface, free of large stones, tree roots and limbs, or other debris prior to placement of geotextiles. Notify Engineer when areas are readied for placement of geotextile.

3.02 INSTALLATION

A. Install in accordance with manufacturer's instructions and the following where shown on Drawings or as directed by the Engineer, in accordance with manufacturer's instructions.

B. Unroll fabric in area to be used, in down-slope direction. Minimize the amount of wrinkles.

C. Seams: either sewn or overlapped.

D. Sewn seams: overlap adjacent fabric sides and ends a minimum of 6 inches. Sew a flat continuous seams, SSa-1, using a 401K two-thread lock stitch and 4 to 6-stitches per inch. Spot sewing is not permitted.

E. Overlap seams: overlap adjacent fabric sides and ends a minimum of 12 inches. Place overlaps so the uphill sheet is shingled over the downhill sheet.

3.03 PROTECTION

A. Secure geotextile from wind damage during and after construction. Do not travel directly upon any in-place geotextiles with construction equipment or vehicles.

B. Patch rips and tears with a minimum 1-foot overlap in each direction from the perimeter of the damaged area. If a damaged area is greater than half the width of the fabric roll, then cut out the entire roll width of the damaged area and place a new section over the area.

3.04 CLOSEOUT ACTIVITIES

A. Provide in accordance with Division 01 General Requirements.

END OF SECTION

This page intentionally left blank

SECTION 32 05 23

CEMENT AND CONRETE FOR EXTERIOR IMPROVEMENTS

PART 1 – GENERAL

1.01 SUMMARY

A. Section Includes

1. Provide structural cement concrete and steel reinforcements in accordance with this Section and applicable reference standards listed in Article 1.03.

1.02 PRICE AND PAYMENT PROCEDURES

A. Measurement and payment requirements: per Division 01 General Requirements.

1.03 REFERENCES

A. Reference Standards

1. MassDOT Standard Specifications and Supplements, except for Compensation sections

2. MassDOT Construction Details

3. Applicable portions of City of Quincy Code of Ordinances and Zoning Ordinances

1.04 ADMINISTRATIVE REQUIREMENTS

A. Coordination, Sequencing, and Scheduling: per Division 01 General Requirements.

1.05 SUBMITTALS

A. Submit in accordance with the Division 01 General Requirements.

1. Product Data

2. Manufacturer Instructions

B. Closeout and Maintenance Material Submittals: per Division 01 General Requirements.

1.06 QUALITY ASSURANCE

A. Provide in accordance with Division 01 General Requirements.

1.07 DELIVERY, STORAGE, AND HANDLING

A. Provide in accordance with Division 01 General Requirements.

1.08 SITE CONDITIONS

A. Existing Conditions: per Division 01 General Requirements.

PART 2 – PRODUCTS

2.01 CONCRETE

A. Provide in accordance with MassDOT Standard Specifications and Supplements Section 901 and MassDOT Construction Details.

B. Materials and composition of mix: per MassDOT Standard Specifications and Supplements Section M4.02.00 and meet the requirements of 4,000 psi (28 days), 3/4-inch, 610 Cement Concrete.

C. Source Quality Control: in accordance with Division 01 General Requirements.

PART 3 – EXECUTION

3.01 INSTALLATION

A. Place structural cement concrete and steel reinforcement accordance with Section 901 of the MassDOT Standard Specifications where required for use in the construction of collars, plugs, thrust blocks, concrete steps, curbs, gutters, paved areas, bridging for trenches, conduit encasement, footings, foundation pads, walls, walkways and other miscellaneous items and as shown on the Drawings.

3.02 CLOSEOUT ACTIVITIES

A. Provide in accordance with Division 01 General Requirements.

END OF SECTION

SECTION 32 12 16

ASPHALT PAVING

PART 1 – GENERAL

1.01 SUMMARY

A. Section Includes

1. Furnish and install tack prime coat, hot mix asphalt pavement base and surface courses and miscellaneous patching in accordance with this Section and applicable reference standards listed in Article 1.03.

1.02 PRICE AND PAYMENT PROCEDURES

A. Measurement and payment requirements: per Division 01 General Requirements.

1.03 REFERENCES

A. Reference Standards

1. MassDOT Standard Specifications and Supplements, except for Compensation sections

2. MassDOT Construction Details

3. Applicable portions of City of Quincy Code of Ordinances and Zoning Ordinances

1.04 ADMINISTRATIVE REQUIREMENTS

A. Coordination, Sequencing, and Scheduling: per Division 01 General Requirements.

1.05 SUBMITTALS

A. Submit in accordance with the Division 01 General Requirements.

1. Product Data

2. Manufacturer Instructions

B. Closeout and Maintenance Material Submittals: per Division 01 General Requirements.

1.06 QUALITY ASSURANCE

A. Provide in accordance with Division 01 General Requirements.

1.07 DELIVERY, STORAGE, AND HANDLING

A. Provide in accordance with Division 01 General Requirements.

1.08 SITE CONDITIONS

A. Existing Conditions: per Division 01 General Requirements.

PART 2 – PRODUCTS

2.01 BITUMEN FOR TACK PRIME COAT

A. Provide in accordance with MassDOT Standard Specifications and Supplements Section 460 and MassDOT Construction Details.

2.02 HOT POURED RUBBERIZED ASPHALT SEALANT

A. Provide in accordance with MassDOT Standard Specifications and Supplements Section 460 and MassDOT Construction Details.

2.03 HOT MIX ASPHALT SURFACE COURSE STANDARD TOP

A. Provide in accordance with MassDOT Standard Specifications and Supplements Section 460, M3.11.03 and MassDOT Construction Details.

2.04 HOT MIX ASPHALT BASE COURSE

A. Provide in accordance with MassDOT Standard Specifications and Supplements Section 460, M3.11.03 and MassDOT Construction Details.

2.05 HOT MIX ASPHALT FOR MISCELLANEOUS USES

A. Provide in accordance with MassDOT Standard Specifications and Supplements Section 472 and MassDOT Construction Details.

2.06 SOURCE QUALITY CONTROL

A. Provide in accordance with Division 01 General Requirements.

PART 3 – EXECUTION

3.01 INSTALLATION

A. Place hot mix asphalt base and top courses on roadways, sidewalks and other areas to maintain traffic access/egress to all properties abutting any Work and for the safe passage of pedestrian and vehicular traffic in accordance with MassDOT Standard Specifications and Supplements Section 460 and MassDOT Construction Details.

1. Provide 3-inch minimum compacted thickness depth of hot mix asphalt base course to achieve the necessary base course grade in support of finish grade pavement elevations indicated on the Drawings or as directed by the Engineer.

2. Apply bitumen for prime/tack coat at a rate of 1/10 to 1/20 gallons per square yard over the hot mix asphalt base course immediately prior to the installation of top course, as shown on the Drawings or as directed by the Engineer. Clean surface of sand and foreign matter and dry before applying the prime coat.

3. Provide 2-inch minimum compacted thickness depth of hot mix asphalt surface course (Standard Top) to achieve the finish grades indicated on the Drawings or as directed by the Engineer.

4. Apply hot poured rubberized asphalt sealant to longitudinal and transverse joints.

B. Install hot mix asphalt for patching and handwork on roadway surfaces that cannot be installed mechanically and when directed by the Engineer in accordance with MassDOT Standard Specifications and Supplements Section 472 and MassDOT Construction Details.

3.02 CLOSEOUT ACTIVITIES

A. Provide in accordance with Division 01 General Requirements.

END OF SECTION

This page intentionally left blank

SECTION 32 16 14

CURBS

PART 1 – GENERAL

1.01 SUMMARY

A. Section Includes

1. Remove and reset or provide new granite, cement concrete and hot mix asphalt curb in accordance with this Section and applicable reference standards listed in Article 1.03.

1.02 PRICE AND PAYMENT PROCEDURES

A. Measurement and payment requirements: per Division 01 General Requirements.

1.03 REFERENCES

A. Reference Standards

1. MassDOT Standard Specifications and Supplements, except for Compensation sections

2. MassDOT Construction Details

3. Applicable portions of City of Quincy Code of Ordinances and Zoning Ordinances

1.04 ADMINISTRATIVE REQUIREMENTS

A. Coordination, Sequencing, and Scheduling: per Division 01 General Requirements.

1.05 SUBMITTALS

A. Submit in accordance with the Division 01 General Requirements.

1. Product Data

2. Manufacturer Instructions

B. Closeout and Maintenance Material Submittals: per Division 01 General Requirements.

1.06 QUALITY ASSURANCE

A. Provide in accordance with Division 01 General Requirements.

1.07 DELIVERY, STORAGE, AND HANDLING

A. Provide in accordance with Division 01 General Requirements.

1.08 SITE CONDITIONS

A. Existing Conditions: per Division 01 General Requirements.

PART 2 – PRODUCTS

2.01 GRANITE CURBS

A. Provide in accordance with MassDOT Standard Specifications and Supplements Section 501 and MassDOT Construction Details.

B. Type: VA-3.

C. Source Quality Control: in accordance with Division 01 General Requirements.

2.02 CEMENT CONCRETE CURB

A. Provide in accordance with MassDOT Standard Specifications and Supplements Section 501 and MassDOT Construction Details.

B. Type: Pre-cast.

C. Source Quality Control: in accordance with Division 01 General Requirements.

2.03 HOT MIX ASPHALT CURB

A. Provide in accordance with MassDOT Standard Specifications and Supplements Section 501 and MassDOT Construction Details.

B. Type: Type-2.

D. Source Quality Control: in accordance with Division 01 General Requirements

PART 3 – EXECUTION

3.01 REMOVAL AND RESETTING

A. Remove and reset curbs, curb inlets and curb corners at locations where required in accordance with Section 580 of the MassDOT Standard Specifications, and the

MassDOT Construction Details. Incorporate existing curbs, curb inlets and curb corners before the installation of new curb.

3.02 INSTALLATION

A. Install new curbs in accordance with Section 500 of the MassDOT Standard Specifications and the Drawings.

B. Install ends of curbs vertically forming a flush joint when 2 curb stones are placed adjacent to each other.

1. Maximum joint space: not to exceed 3/4 inches.

2. Top 6-inches (exposed portion) of curb stone: uniform thickness and surface finish.

3. Radii of the curved curb stone: per the Drawings shall be as shown on drawings.

3.03 CLOSEOUT ACTIVITIES

A. Provide in accordance with Division 01 General Requirements.

END OF SECTION

This page intentionally left blank

SECTION 32 17 25

PAVEMENT MARKINGS

PART 1 – GENERAL

1.01 SUMMARY

A. Section Includes

1. Provide pavement markings in accordance with this Section and applicable reference standards listed in Article 1.03.

1.02 PRICE AND PAYMENT PROCEDURES

A. Measurement and payment requirements: per Division 01 General Requirements.

1.03 REFERENCES

A. Reference Standards

1. MassDOT Standard Specifications and Supplements, except for Compensation sections

2. MassDOT Construction Details

3. MUTCD and Mass Amendments

4. Applicable portions of City of Quincy Code of Ordinances and Zoning Ordinances

1.04 ADMINISTRATIVE REQUIREMENTS

A. Coordination, Sequencing, and Scheduling: per Division 01 General Requirements.

1.05 SUBMITTALS

A. Submit in accordance with the Division 01 General Requirements.

1. Product Data

2. Manufacturer Instructions

B. Closeout and Maintenance Material Submittals: per Division 01 General Requirements.

1.06 QUALITY ASSURANCE

A. Provide in accordance with Division 01 General Requirements.

1.07 DELIVERY, STORAGE, AND HANDLING

A. Provide in accordance with Division 01 General Requirements.

1.08 SITE CONDITIONS

A. Existing Conditions: per Division 01 General Requirements.

PART 2 – PRODUCTS

2.01 PAVEMENT MARKINGS

A. Provide in accordance with MassDOT Standard Specifications and Supplements Section 860 and MassDOT Construction Details.

B. Type: thermoplastic reflectorized type conforming to M7.01.03 (White) and M7.01.04 (Yellow).

C. Source Quality Control: per Division 01 General Requirements.

PART 3 – EXECUTION

3.01 INSTALLATION

A. Apply and install pavement markings in accordance MassDOT Standard Specifications and Supplements Section 860, the MUTCD and Mass Amendments, and the Drawings.

3.02 CLOSEOUT ACTIVITIES

A. Provide in accordance with Division 01 General Requirements.

END OF SECTION

SECTION 32 90 00

PLANTING

PART 1 – GENERAL

1.01 SUMMARY

A. Section Includes

1. Provide loam borrow, seeding, and supporting materials in accordance with this Section and applicable reference standards listed in Article 1.03.

1.02 PRICE AND PAYMENT PROCEDURES

A. Measurement and payment requirements: per Division 01 General Requirements.

1.03 REFERENCES

A. Reference Standards

1. MassDOT Standard Specifications and Supplements, except for Compensation sections

2. MassDOT Construction Details

3. Applicable portions of City of Quincy Code of Ordinances and Zoning Ordinances

4. ANSI Z60.1 Standard Nursery Stock

1.04 ADMINISTRATIVE REQUIREMENTS

A. Coordination, Sequencing, and Scheduling: per Division 01 General Requirements.

1.05 SUBMITTALS

A. Submit in accordance with the Division 01 General Requirements.

1. Product Data

2. Manufacturer Instructions

B. Closeout and Maintenance Material Submittals: per Division 01 General Requirements.

1.06 QUALITY ASSURANCE

A. Provide in accordance with Division 01 General Requirements.

1.07 DELIVERY, STORAGE, AND HANDLING

A. Provide in accordance with Division 01 General Requirements.

1.08 SITE CONDITIONS

A. Existing Conditions: per Division 01 General Requirements.

PART 2 – PRODUCTS

2.01 LOAM BORROW

A. Provide in accordance with MassDOT Standard Specifications and Supplements Section 751and MassDOT Construction Details.

B. Type: per MassDOT Standard Specifications and Supplements Section M1.05.0.

2.02 SEED AND SUPPORTING MATERIAL

A. Provide seed, limestone, fertilizers, plant materials, water for irrigation and soil conditioners in accordance with MassDOT Standard Specifications and Supplements Section 765.40 and MassDOT Construction Details, and ANSI Z60.1.

B. Provide New England wetland seed mixture in accordance with regional industry standard.

2.03 PLANTING TREES, SHRUBS AND GROUNDCOVER

A. Provide in accordance with MassDOT Standard Specifications and Supplements Section 771 and MassDOT Construction Details.

B. Type: per MassDOT Standard Specifications and Supplements Section M6.06.1

2.04 SOURCE QUALITY CONTROL

A. Provide in accordance with Division 01 General Requirements.

PART 3 – EXECUTION

3.01 INSTALLATION

A. Place loam borrow at designated locations where plant material (grasses, bushes, and trees) are to be installed or re-installed in accordance with Section 751 of the MassDOT Standard Specifications and the Drawings or as directed by the Engineer.

3.02 SEED AND SUPPORTING MATERIAL

A. Install and apply seed and supporting materials at the rates of application and in accordance with MassDOT Standard Specifications and Supplements Section 765.40 and the Drawings.

3.03 PLANTING TREES, SHRUBS AND GROUNDCOVER

A. Provide in accordance with MassDOT Standard Specifications and Supplements Section 771 and MassDOT Construction Details.

B. Type: per MassDOT Standard Specifications and Supplements Section M6.06.1

3.04 CLOSEOUT ACTIVITIES

A. Provide in accordance with Division 01 General Requirements.

END OF SECTION

This page intentionally left blank

SECTION 33 10 00

WATER DISTRIBUTION

PART 1 – GENERAL

1.01 SUMMARY

A. Section Includes:

1. Coordination with Owner.

2. Location of existing water piping prior to installation of new water main.

3. Excavation, backfill, and bedding, installation, testing of new water main, fittings, valves, and appurtenances.

4. Replacement of existing water services and curb stops where specified on the Drawings.

1.02 PRICE AND PAYMENT PROCEDURES

A. Measurement and payment requirements: per Division 01 General Requirements.

1.03 REFERENCES

A. Comply with the requirements and specifications of the City of Quincy.

B. Code Compliance: Comply with State Plumbing Code and local plumbing codes. Where there is a conflict in the codes, the more stringent code shall apply.

C. AWWA Standards: Comply with requirements of Section 4 of AWWA C601, "Preventive Measures During Construction" for cleanliness. AWWA C651 - Disinfecting Water Mains

D. AWWA C800 - Underground Service Line Valves and Fittings

E. NSF/ANSI Standard 61 - Drinking Water System Components - Health Effects

1.04 ADMINISTRATIVE REQUIREMENTS

A. Coordination, Sequencing, and Scheduling: per Division 01 General Requirements.

1.05 SUBMITTALS

A. Submit in accordance with the Division 01 General Requirements.

B. Product Data: Submit manufacturer's product data and installation instructions for each product specified.

C. Manufacturer's Recommendations: Submit for approval, copies of the manufacturer's printed recommendations for the storage, protection, handling, and installation of the piping, valves, and appurtenances which shall be strictly adhered to by the Contractor.

D. Certificates of Compliance: Each shipment of piping, valves, and appurtenances shall be accompanied with the manufacturer's notarized certificate certifying conformance with all requirements of the Specifications.

E. Personnel: Submit names and qualifications of personnel or firm to perform disinfection work.

F. In addition to the submittals listed above, submit a permanently bound compilation of all submittals at Substantial Completion.

1.06 QUALITY ASSURANCE

A. Provide in accordance with Division 01 General Requirements.

1.07 DELIVERY, STORAGE, AND HANDLING

A. Provide in accordance with Division 01 General Requirements.

B. Packing, Shipping, Handling, and Unloading

1. Provide that each shipment of pipe, pipefittings and appurtenances includes manufacturers' Certificate of Conformance.

2. Inspect upon delivery and reject pipe immediately that does not conform to the specified requirements or has been damaged beyond repair and immediately remove from Site.

C. Waste Management and Disposal

1. Remove damaged pipe from Site and legally dispose of.

1.08 SITE CONDITIONS

A. Existing Conditions: per Division 01 General Requirements.

PART 2 – PRODUCTS

2.01 GENERAL

A. Materials to be incorporated into the work shall be new, purchased specifically for the Project.

B. Products used in the construction that come in contact with raw or drinking water shall meet the NSF/ANSI Standard 61 for Drinking Water System Components - Health Effects. The primary focus of the standard is on contaminants or impurities, which may be imparted indirectly to drinking water. The products and/or materials covered include, but are not limited to, protective materials (coatings, linings, liners), joining and sealing materials (solvent cements, welding materials, gaskets), and mechanical devices used in transmission/distribution systems, (valves, gates).

2.02 PIPE

A. Ductile Iron Pipe (DI or DIP)

1. Ductile iron pipe shall be manufactured in accordance with AWWA/ANSI C151/A21.51.

2. Ductile iron pipe shall be Class 52, double cement lined in accordance with AWWA/ANSI C104/A21.4, push-on joint or mechanical joint type, unless otherwise specified on the Drawings.

3. Ductile iron pipe shall be supplied in 18-20 foot lengths with factory applied bituminous coatings in accordance with AWWA/ANSI C151.

2.03 FITTINGS AND ACCESSORIES:

A. Fittings: Pipe fittings shall be ductile iron, cement lined fittings and shall have mechanical joints. The fittings shall be designed in accordance with AWWA/ANSI C153/A21.53 or AWWA/ANSI C110/A21.10, ductile iron and rated for 350 PSI working pressure. Fittings are to be bituminous coated, cement lined and seal-coated as previously specified for ductile iron pipe.

B. Accessories: Accessories such as gaskets, glands, bolts, nuts, etc., shall be designed in accordance with AWWA/ANSI C111/A21.11 and shall be furnished as required to make all piping systems complete

C. General: Provide anchorages for tees, plugs, caps, and bends. After installation, apply a full coat of asphalt or other acceptable corrosion-retarding material to surfaces of rods and clamps.

D. Clamps, Straps and Washers: Steel, ANSI/ASTM A506.

E. Rods: Steel, ANSI/ASTM A575.

F. Rod Couplings: Malleable iron, ANSI/ASTM A197.

G. Bolts: Steel, ANSI/ASTM A307.

H. Cast Iron Washers: ANSI/ASTM A126, Class A.

I. Thrust Blocks: 3000 psi concrete (min.).

J. Pipe Lubricant: Suitable for use in potable water supply.

2.04 TRACE WIRE

A. 12 Ga. solid copper trace wire must be provided for all non-metallic service piping.

2.05 UNDERGROUND MARKING TAPE

A. Detectable marking tape with aluminum core with minimum 6-inch width and minimum 5-mils thickness. Text or lettering shall be repeated continuously along length of tape at intervals no greater than 3-feet. Tape shall use APWA uniform color-coding for quick and easy identification and location. Tape shall include text indicating “Caution Buried Potable Water Line Below”.

PART 3 – EXECUTION

3.01 GENERAL

A. Coordination: Coordinate all water work with the Owner. Do not operate any hydrants or valves without express consent of the Owner.

3.02 INSTALLATION

A. Methods: Materials to be used shall be stored and handled in accordance with the manufacturer's recommendations. The Contractor is responsible for replacing at his cost any pipe and/or material damaged during the course of unloading or construction.

B. Pipe Unloading: It is the responsibility of the Contractor to unload and string pipe. Pipe shall be lifted off the truck and placed on the ground with care and in accordance with manufacturer’s recommendations to prevent damage to the pipe and the cement-lined interior of the pipe. Rolling the pipe off the truck or dropping the pipe is prohibited. Pipe may be stacked, but no more than three layers high and only with proper blocking in between layers.

C. Pipe Jointing: Joints shall be made in a dry trench and in accordance with the manufacturer's recommendations and the best practices for class of pipe laid. The ends of the pipe shall be wiped clean with a dry cloth before making the joint.

D. Demolition: Water service pipe, and appurtenances proposed for replacement shall be disposed of in accordance with all federal, state, and local laws by the Contractor.

E. Abandonment: Existing water pipe may be abandoned in place, in locations where the proposed water pipe can be installed adjacent to existing pipe to avoid water bypassing.

F. Pipe Laying:

1. Installation of pipe shall be in accordance with the requirements of AWWA C600. The pipe shall be accurately laid to the line and grades to the satisfaction of the Engineer. The line and grade may be adjusted by the Engineer from that shown on the drawings to meet field conditions and no extra compensation shall be claimed therefore.

2. Where possible, pipe shall be laid with a minimum of five feet of cover over the top of the pipe. No pipe shall be laid with less than five feet of cover without prior approval of the Engineer. Where five feet of cover is not possible, the pipe shall be insulated.

3. Where new pipe is to connect to existing pipe with less than five feet of cover exist, off-sets or joint deflection, in accordance with the allowances specified below, shall be used to transition from existing pipe elevation to new pipe elevation.

4. Where water and sewer trenches are within 2-feet of each other, they should be excavated together, to minimize disruption to residents and streets.

5. In areas where the Contractor's trenching operation exceeds the typical section, the Contractor may be required to use a higher strength class pipe in lieu of the designated class at no additional cost to the Owner.

6. The deflection of alignment at a joint shall not exceed the maximum joint deflection specified in AWWA C600 or the maximum allowable deflection permitted by the manufacturer.

7. When mechanical joint, push-on joint, or similar pipe is laid, the bell of the pipe shall be cleaned of excess tar or other obstruction and wiped out before the cleaned and prepared spigot of the next pipe is inserted into it. The gasket, bell, and spigot shall be lubricated with gasket lubricating compound compatible with potable water. The new pipe shall be shoved firmly into place until properly seated and held securely until the joint has been completed. Pipes shall be pushed home by a method that protects the driving end of the pipe.

Also, a minimum of two copper or bronze wedges shall be driven between each cast iron and/or ductile joint.

8. The interior of each length of pipe will be swabbed and wiped clean before laying the next length. Whenever the work is stopped temporarily, or for any reason whatsoever, the end of the pipe shall be carefully protected against dirt, water, or other extraneous material by use of a construction cap. Bedding shall be as shown on the plans. No pipe shall be covered or trench backfilled until approved by the Engineer.

9. Approved joint restraint methods shall be provided for water mains where any bends, tees, plugs, wyes, or valves are installed. The length of joint restraint shall be in accordance with AWWA Ductile Iron Pipe and Fittings Manual of Practice M41.

G. Pipe Cutting:

1. 1. Where required, sections of pipe may be cut to provide shorter sections of pipe necessary for the construction. The cutting of the pipe shall be done in accordance with the pipe manufacturer's recommendations and subject to the approval of the Engineer.

2. In general, the pipe material shall be cut by using a saw or milling process, approved by the pipe manufacturer. The pipe shall be cut, not broken. The cut end of the pipe shall be square to the axis of the pipe with rough edges ground smooth and beveled where being used for push-on joints.

H. Repair Clamps: Repair clamps are not considered as permanent repairs. If a section of main is found to be defective, it shall be cut out and a new section of pipe shall be installed using solid ductile iron couplings.

3.03 SPECIAL REQUIREMENTS

A. Vertical Separation from Sanitary Sewer: Whenever water lines must cross sewers, the line shall be laid at such an elevation that the top of the sewer is at least 18-inches below the bottom of the water line. When the elevation of the sewer cannot be buried to meet the above requirements, protection shall be provided as follows:

1. Adequate structural support for the sewers to prevent excessive deflection of joints and settling on and breaking the water lines.

2. One full length of water pipe centered at the point of crossing so that the joints will be equal distance and as far as possible from the sewer.

B. Separation of Water Line from Cable TV lines, Telephone Lines, and Electrical Cables: For parallel installation, water lines shall be laid with at least 10 feet of separation from any cable. All water line crossings of cables shall be at an angle not less than 45 degrees, the cable shall be housed in an iron or steel conduit where possible at least six feet on either side of the water line, and the water line and cable carrying conduit shall be separated by at least 18-inches.

C. Assembling Mechanical Joints: Surfaces against which the gasket will come in contact shall be thoroughly brushed with a wire brush prior to assembly of the joint. The gasket shall be cleaned. The gasket, bell, and spigot shall be lubricated by using gasket lubricating compound compatible with potable water. The spigot shall be inserted into the bell until it is correctly seated. The gasket shall then be seated evenly in the bell at all points, centering the spigot, and the gland shall be pressed firmly against the gasket. After bolts have been inserted and the nuts have been made up finger-tight, diametrically opposite nuts shall be progressively and uniformly tightened all around the joint to the proper tension by means of a torque wrench. Mechanical joints shall be assembled with mechanical joint retainer glands where appropriate.

D. Torque mechanical joint bolts with a torque wrench to the range specified in AWWA C600. Mechanical joint bolts shall be re-torqued to the range specified in AWWA C600 after waiting a period of two hours. If effective sealing of the joint is not attained at the maximum torque specified, the joint shall be disassembled and thoroughly cleaned, then reassembled. Bolts shall not be overstressed to tighten a leaking joint.

3.04 DISINFECTION

A. General: Water mains will be flushed and disinfected by the Contractor. At completion of water service installation, flush and disinfect in conformance with AWWA C651. Prevent contaminated or highly chlorinated water from entering new or previously disinfected mains. Notify the Owner at least 48 hours before disinfecting water main. The Owner/Engineer shall be present for the duration of flushing to witness and sign the results.

B. Flushing and draining: Flush using water from existing main. Drain at hydrant first and then building. Provide the following minimum flow in gallons per minute: 4-inch diameter - 100 GPM; 6-inch diameter - 220 GPM; 8-inch diameter - 390 GPM; 12-inch diameter - 880 GPM. Coordinate flushing with Owner, take necessary measures to prevent damage or flooding.

C. Method: Chlorinate in accordance with AWWA 651 and as approved by the Owner.

D. Sampling: Provide sampling taps in accordance with AWWA C651. Take one sample at each location as described in Section 5 of AWWA C651. No hose of fire hydrant shall be used in the collection of samples.

E. Equipment: Provide water pumps with adequate metering devices. Provide chlorine injection pumps or chlorinators, which allow accurate measurement of chlorine being introduced to water service.

F. Neutralization: The Contractor shall be responsible for neutralizing the chlorine residual of the disposed water. Neutralization chemical tablets and dosages listed in Appendix B of AWWA C651 are recommended. Contractor to provide equipment sufficient to provide dechlorination at the flushing rate indicated.

G. Furnish and install temporary sample taps on the proposed water mains as required. Once a water main has been accepted and put in service, remove sample taps provided to sample in accordance with AWWA C651 to the corporation stop.

3.05 TESTING OF WATER SERVICE PIPING:

A. Perform hydrostatic testing of completed lines. Apply 1.5 times the working pressure for 20 minutes, 2-psi gage drop or less is acceptable.

B. Perform operational testing of valves by opening and closing under water pressure to insure proper operation.

3.06 TESTING OF WATER MAIN

A. Perform pressure and leakage tests under the Owner's supervision in accordance with AWWA C600 and the requirements set forth below. Notify the Owner at least 48 hours before testing the water main. The Owner/Engineer shall be present for the duration of testing to witness and sign the results.

B. Test Reports: Test reports shall be provided indicating actual distance of pipe by size, number of valves and hydrants tested.

C. Duration of hydrostatic testing shall be a minimum of two (2) hours. The test pressure shall be 1.5 times the working pressure at the lowest point, and in no case less than 150 psi.

D. The allowable leakage for ductile iron pipe shall be determined by the formula:

$$L = \frac{SD\,P^{1/2}}{133{,}200}$$

Where L is the allowable leakage in gallons per hour, S is the length of pipe in feet, D is the nominal diameter in inches, and P is the average test pressure in psi.

For convenience, the following table may be used to estimate allowable leakage for ductile iron water main installations:

CIPRA RECOMMENDED ALLOWABLE LEAKAGE PER

1000-FT. OF PIPELINE* (GALLONS PER HOUR)

Avg. Test Pressure	NOMINAL PIPE DIAMETER - INCHES					
PSI	4	6	8	10	12	16
450	0.64	0.95	1.27	1.59	1.91	2.55
400	0.60	0.90	1.20	1.50	1.80	2.40
350	0.56	0.84	1.12	1.40	1.69	2.25
300	0.52	0.78	1.04	1.30	1.56	2.08
275	0.50	0.75	1.00	1.24	1.49	1.99
250	0.47	0.71	0.95	1.19	1.42	1.90
225	0.45	0.68	0.90	1.13	1.35	1.80
200	0.43	0.64	0.85	1.06	1.28	1.70
175	0.40	0.59	0.80	0.99	1.19	1.59
150	0.37	0.55	0.74	0.92	1.10	1.47
125	0.34	0.50	0.67	0.84	1.01	1.34
100	0.30	0.45	0.60	0.75	0.90	1.20

* For mechanical or push-on joint pipe with 18-ft. nominal lengths. To obtain the recommended allowable leakage for pipe with 20-ft. nominal lengths, multiply the leakage calculated from the above table by 0.9

If the pipeline under test contains sections of various diameters, the allowable leakage will be the sum of the computed leakage for each size.

3.07 CLOSEOUT ACTIVITIES

A. Provide in accordance with Division 01 General Requirements.

END OF SECTION

SECTION 33 41 00

STORM UTLIITY DRAINAGE PIPING

PART 1 – GENERAL

1.01 SUMMARY

A. Section Includes

1. Provide storm drain systems in accordance with this Section, applicable reference standards listed in Article 1.03., and the Drawings.

1.02 PRICE AND PAYMENT PROCEDURES

A. Measurement and payment requirements: per Division 01 General Requirements.

1.03 REFERENCES

A. Reference Standards

1. MassDOT Standard Specifications and Supplements, except for Compensation sections

2. MassDOT Construction Details

3. Applicable portions of City of Quincy Code of Ordinances and Zoning Ordinances

4. AWWA/ANSI C905 - Polyvinyl Chloride (PVC) Pressure Pipe and Fabricated Fittings, 14 In. Through 48 In.

5. ASTM C1173 - Flexible Transition Couplings for Underground Piping Systems

6. ASTM D2321 - Underground Installation of Thermoplastic Pipe for Sewers and Other Gravity-Flow Applications

7. ASTM D2412 – Determination of External Loading Characteristics of Plastic Pipe by Parallel-Plate Loading

8. ASTM D3034 - Type PSM Poly Vinyl Chloride (PVC) Sewer Pipe and Fittings

9. ASTM D3139 - Joints for Plastic Pressure Pipe Using Flexible Elastomeric Seals

10. ASTM D3212 - Joints for Drain & Sewer Plastic Pipes Using Flexible Elastomeric Seals

11. ASTM F477 - Elastomeric Seals (Gaskets) for Joining Plastic Pipe

12. ASTM F679 – Poly Vinyl Chloride (PVC) Large-Diameter Plastic Gravity Sewer Pipe and Fittings A.

13. AASHTO M252: Corrugated Polyethylene Drainage Pipe

14. AASHTO M294: Corrugated Polyethylene Pipe, 300- to 1200-mm (12- to 48-in.) Diameter

15. ASTM D3350: Polyethylene Plastics Pipe and Fittings Materials

16. ASTM F405: Corrugated Polyethylene (PE) Pipe and Fittings

17. ASTM F2306: Standard Specification for 12 to 60 in. (300 to 1500 mm) Annular Corrugated Profile-Wall Polyethylene (PE) Pipe and Fittings for Gravity-Flow Storm Sewer and Subsurface Drainage Applications

18. ASTM F2648: Standard Specification for 2 to 60 inch (50 to 1500 mm) Annual Corrugated Profile Wall polyethylene (PE) Pipe and fittings for Land Drainage Applications

1.04 ADMINISTRATIVE REQUIREMENTS

A. Coordination, Sequencing, and Scheduling: per Division 01 General Requirements.

1.05 SUBMITTALS

A. Submit in accordance with the Division 01 General Requirements.

1. Product Data

2. Certificates

   a. Manufacturer's notarized certificate certifying conformance with the Specifications to accompany shipments

3. Design Data/Submittals

   a. Pipe manufacturer’s anti-floatation calculations for each pipe material and details, signed and stamped by a licensed Professional Engineer in the State of Massachusetts based on the following criteria:

      1) Groundwater elevation shall be set at grade above the pipe.

2) Factor of safety shall be 1.1; downward forces from the weight of the pipe and soils over pipe shall be 1.1 times the buoyant uplift forces.

3) The pipe shall be considered empty. Calculations shall not consider the weight of internal water.

4. Manufacturer Instructions

5. Field Quality Control Submittals

a. test results

b. logs of inspection and testing

B. Closeout and Maintenance Material Submittals: per Division 01 General Requirements.

1. Record depth and take ties to the location of the following for Conformed to Construction Records:

a. Pipe stub capped ends

b. Locations of plugged pipes

c. Manholes and catch basins

1.06 QUALITY ASSURANCE

A. Provide in accordance with Division 01 General Requirements.

1.07 DELIVERY, STORAGE, AND HANDLING

A. Provide in accordance with Division 01 General Requirements.

B. Packing, Shipping, Handling, and Unloading

1. Provide that each shipment of pipe, pipefittings and appurtenances includes manufacturers' Certificate of Conformance.

2. Inspect upon delivery and reject pipe immediately that does not conform to the specified requirements or has been damaged beyond repair and immediately remove from Site.

C. Waste Management and Disposal

1. Remove damaged pipe from Site and legally dispose of.

1.08 SITE CONDITIONS

A. Existing Conditions: per Division 01 General Requirements.

PART 2 – PRODUCTS

2.01 GENERAL

A. Provide in accordance with MassDOT Standard Specifications and Supplements Section 230 and MassDOT Construction Details and as specified below.

B. Provide fittings of same type and class of materials as pipe with single piece gasket, unless otherwise specified.

C. Minimum "pipe stiffness" at 5% deflection: 46 psi for all sizes when tested in accordance with ASTM D2412.

D. Joint deflection: accommodate an offset along the pipe axis of a minimum of 7 inches over 20 horizontal feet.

E. Source Quality Control: in accordance with Division 01 General Requirements.

2.02 POLYVINYL CHLORIDE (PVC) DRAIN PIPE

A. PVC pipe, joints and fittings: per ASTM D3034 (15 inch diameter and smaller) and ASTM F679 (18 inch diameter and larger).

B. Joints: rubber gasketed "Bell and Spigot" type per ASTM D3212.

C. Gaskets: ASTM F477

2.03 SMOOTH INTERIOR CORRUGATED POLYETHYLENE PIPE (HDPE)

A. Smooth Interior Corrugated Polyethylene Pipe shall be meet ASTM F2648.

B. Pipe fittings may be fabricated or molded, conform to ASTM F2306, and be equal to that of the pipe with respect to physical and chemical properties. Fittings shall not reduce or impair the overall integrity or function of the pipeline. Only fittings supplied or recommended by the pipe manufacturer shall be used.

C. Joints shall be of watertight design, with electrometric gaskets meeting the requirements of ASTM F477.

2.04 MISCELLANEOUS

A. Pipe to Pipe Connection Flexible Couplings: ASTM C1173.

1. Type A: non-pressure application, elastomeric sleeve or rubber sleeve incorporating stainless steel tension bands and a tightening mechanism to provide a positive seal against both infiltration and exfiltration. Stainless steel bands: 300 series stainless steel. Coupling: resilient and unaffected by soil conditions, resistant to chemicals, ultraviolet rays, and fungus growth.

2. Type C: PVC repair coupling of same type and class of materials as pipe. Fitting: provided with single piece gasket.

B. Underground Marking Tape: detectable marking tape with aluminum core with minimum 6-inch width and minimum 5 mils thickness with APWA uniform color-coding for quick and easy identification and location. Text or lettering: repeated continuously along length of tape at intervals no greater than 3 feet indicating “Caution Buried Drain Line Below”.

C. Manholes Connections

1. To New Manholes: compression type flexible connector cast into the manhole wall or flexible boot connection per pipe manufacturer recommendations.

2. To Existing Manholes: by coring and installing a boot type flexible connector.

D. Gasket lubricant: solution of vegetable soap or other solution supplied by the pipe manufacturer.

E. Anti-floatation system for each pipe material: per the design of the pipe manufacturer and provided where required.

PART 3 – EXECUTION

3.01 INSTALLATION

A. Install storm drain piping in accordance with Section 230 of the MassDOT Standard Specifications, and to the lines and grades and at the locations shown on the Drawings. Field verify elevations and slope and make adjustments as necessary.

B. Install in accordance with manufacturer's recommendations. Do not install unsound or damaged pipe or accessories.

C. Secure each length of pipe with bedding before placing next length. Bed pipe as shown on Drawings. Excavate bell/coupling holes or provide in the base material to receive the bell or coupling so that only the barrel of the pipe receives bearing pressure from the supporting material. Do not permanently supported pipe or fittings on blocks, wedges, boards or stones.

D. When each pipe has been properly bedded, place and compact enough of the backfill material between the pipe and the sides of the trench to hold the pipe in correct alignment.

E. Close open ends of pipe by suitable temporary bulkheads to prevent entrance of earth and other materials when pipe laying is not in progress.

F. Take necessary precautions to prevent floatation of the pipe as a result of the water in the trench.

G. Maintain flows during Work per Division 01 General Requirements.

H. Assist Engineer as needed to run level checks on pipe slopes, and take ties.

I. Lay pipe to line and grade shown on the Drawings. If grade is not shown, determine elevations of start and finish points for each run of pipe. Lay pipe to a uniform grade between manholes. Line and grade may be adjusted by the Engineer as required by field conditions. Lay each pipe to form a close joint with the next adjoining pipe and bring the inverts continuously to the required line and grade.

J. Immediately lay pipe as soon as excavation is completed and the bedding material has been brought to the proper grade.

1. Insert circular rubber gasket in the gasket seat provided and apply a thin film of gasket lubricant to the inside surface of the gasket.

2. Clean spigot end of the pipe and enter into the rubber gasket in the bell, using care to keep the joint from contacting the ground.

3. Complete joint shall then be completed by forcing the plain end to the seat of the bell. Pipe which is not furnished with a depth mark shall be marked before assembly to assure that the spigot end is inserted to the full depth of the joint.

K. Do not lay next length of pipe until the previous length has had sufficient material tamped about it to firmly secure it in place so as to prevent any movement or disturbance.

L. Do not lay pipe in water or when trench conditions or weather are unsuitable for such Work, except as approved by Engineer. Do not use installed pipe to remove water from Work area.

M. Lay pipe with the bell ends facing the direction of the laying unless otherwise permitted by the Engineer. Make joints per pipe manufacturers' recommendations.

N. Flush pipes and remove debris per method approved by Engineer. Gravity flushing is not acceptable.

O. Connections to manholes and catch basins: short length of pipe so that joints are located within 3 feet of inside surface of manholes and catch basins.

P. Use manufacturer recommended anti-floatation system for each pipe material.

Q. Flexible Couplings: used and located as approved by Engineer.

1. Pipe Connections to New Manholes: use compression type flexible connector cast into the manhole wall or flexible boot connection per pipe manufacturer recommendations. Field coring of new manholes will not be allowed.

2. Pipe Connections to Existing Manholes: coring the existing manhole and installing a boot type flexible connector.

R. PVC Pipe Installation

1. Store pipe bundles on a flat surface so as to support the barrels evenly. This is important as in hot weather PVC pipe will deflect or warp causing installing problems in line and grade. Do not use warped sections.

2. Keep pipe stacked in original shipping bundles, and only remove pipe from the bundle for one days' laying and distribute along the trench.

S. Polyethylene Pipe Installation

1. Bedding and burial of pipe and fittings: ASTM D2321 and the manufacturer's recommended installation guidelines.

2. Minimum cover in traffic areas: 2 feet.

3.02 FIELD QUALITY CONTROL

A. Provide in accordance with Division 01 General Requirements.

B. Subject pipe to thorough inspection and tests in accordance with the methods prescribed by, and acceptance or rejections e based on, applicable ASTM specifications. Pipes may be rejected at Site if non-conforming or damaged regardless of prior factory acceptance.

C. Remove and replaced damaged pipe found or encase in a Class A concrete collar or envelope as directed, at no additional cost to the Owner.

D. Perform digital video inspection of the interior of pipe and catch basin lateral connections prior to final paving by experienced personnel trained in locating breaks, obstacles and service connections by closed circuit television. Submit a DVD and suitable log to Engineer for review prior to final paving.

E. Deflection Test for Flexible Pipe

1. Within 30 days of completion of the PVC pipe installation, test 100% of pipe with a "Go/No-Go" mandrel. Size mandrel outside dimension to permit no more than a 7.5% deflection. Base mandrel dimensions on a base pipe ID.

Mandrel O.D. = ((100-7.5)/100) X base pipe ID

3.01 CLEANING

A. Clean and flush piping after Work is completed and before final acceptance.

3.03 CLOSEOUT ACTIVITIES

A. Provide in accordance with Division 01 General Requirements.

END OF SECTION

SECTION 33 49 00

STORM DRAINAGE STRUCTURES

PART 1 – GENERAL

1.01 SUMMARY

A. Section Includes

1. Remove, provide, excavate, install and backfill new storm drainage catch basins, manholes and castings in accordance with this Section and applicable reference standards listed in Article 1.03.

1.02 PRICE AND PAYMENT PROCEDURES

A. Measurement and payment requirements: per Division 01 General Requirements.

1.03 REFERENCES

A. Reference Standards

1. MassDOT Standard Specifications and Supplements, except for Compensation sections

2. MassDOT Construction Details

3. Applicable portions of City of Quincy Code of Ordinances and Zoning Ordinances

1.04 ADMINISTRATIVE REQUIREMENTS

A. Coordination, Sequencing, and Scheduling: per Division 01 General Requirements.

1.05 SUBMITTALS

A. Submit in accordance with the Division 01 General Requirements.

1. Product Data

2. Manufacturer Instructions

3. Design Data/Submittals

a. Manufacturer's anti-floatation calculations for each structure, signed and stamped by a licensed Professional Engineer in the State of Massachusetts based on the following criteria:

1) Groundwater elevation shall be set at grade above the structure.

2) Factor of safety shall be 1.1; downward forces from the weight of the pipe and soils over pipe shall be 1.1 times the buoyant uplift forces.

3) The structure shall be considered empty. Calculations shall not consider the weight of internal water

B. Closeout and Maintenance Material Submittals: per Division 01 General Requirements.

1.06 QUALITY ASSURANCE

A. Provide in accordance with Division 01 General Requirements.

1.07 DELIVERY, STORAGE, AND HANDLING

A. Provide in accordance with Division 01 General Requirements.

1.08 SITE CONDITIONS

A. Existing Conditions: per Division 01 General Requirements.

PART 2 – PRODUCTS

2.01 CASTINGS

1. Storm Drain Manhole Frames and Covers: Labeled with "DRAIN" in 2" high raised letters on cover, lettering to be approved by owner. Manhole frame stall be 4 inches in height and cover shall be 30 inches in diameter. Frame shall be provided with a minimum of 4 one inch pre cast holes in flange for mounting to drainage structure. Product number 00104876A01 and Model 1046ZPT & 1040APT frame and cover assembly as manufactured by East Jordan Ironworks or approved equal.

2. Catch basins: Lebaron Foundry catalog number LF248-2 Type F or approved equal catch basin square frame or gutter inlet frames and grates with square hole grate per the Drawings.

3. Source Quality Control: in accordance with Division 01 General Requirements.

2.02 CATCH BASINS AND DRAIN MANHOLES

A. Provide in accordance with MassDOT Standard Specifications and Supplements Section 201 and MassDOT Construction Details.

B. Catch Basins and Drain Manholes shall be constructed of pre-cast reinforced concrete sections unless directed otherwise by the Engineer.

C. Anti-floatation Slab: Provide precast anti-floatation slabs, slab shall be one monolithic precast base unit. Anti-floatation slabs may be cast in place based on manufacturer's recommendation and with approval of the Engineer.

D. Pipe to Structure Connections-Boot Type: The connector shall consist of a rubber gasket or boot, metal expansion ring and double metal take-up clamps. Rubber boots and gasket material shall meet or exceed ASTM C923.

E. Source Quality Control: in accordance with Division 01 General Requirements.

PART 3 – EXECUTION

3.01 INSTALLATION

A. Provide in accordance with Sections 201 and 220 of the MassDOT Standard Specifications and Supplements and the Drawings.

B. Set catch basin and manhole frames to finished lines and grades, as specified. Set castings in bituminous concrete collars and underlay with cement concrete. Collars: at least 9 inches deep and extend to a radius of 1 foot beyond the circumference of the frame, as shown on the Drawings.

C. Adjustments to existing drainage structures: per the Drawings or as directed by Engineer. Refill the excavated area with gravel and set casting into a concrete collar. Engineer will determine the new elevation of the structure.

D. Remodeling: per the Drawings or as directed by the Engineer.

1. Provide remodeling of cone of the structure where line or grade requires a change greater than 6 inches at existing drainage structures or where noted on the Drawings.

2. For structures in the roadway: refill excavated area with gravel and set casting into a concrete collar and overlay with 3-inch thick bituminous concrete top course. Engineer will determine the new elevation of the structure.

E. Existing frames and grates belonging to the City and not needed for the Work: transported and carefully stacked at the City DPW Yard or otherwise disposed of as directed by Engineer at no additional cost to Owner.

F. Place covers on manholes. Place frames and covers on catch basins and gutter inlets.

G. Seal drain pipe connections to catch basin/manhole structures with mortar per M4.02.15 of the MassDOT Standard Specifications and Supplements.

3.02 FIELD QUALITY CONTROL

A. Do not pave over any of the utility appurtenances/structures unless specifically directed otherwise.

B. If a defective casting is encountered, remove it as directed by the Engineer and install a new casting. Repair or replace castings damaged by Contractor at no additional cost to Owner.

3.03 CLOSEOUT ACTIVITIES

A. Provide in accordance with Division 01 General Requirements.

END OF SECTION

CITY OF QUINCY, MASSACHUSETTS
DEPARTMENT OF PARK & FORESTRY

ATLANTIC MIDDLE SCHOOL CAMPUS IMPROVEMENT PROJECT

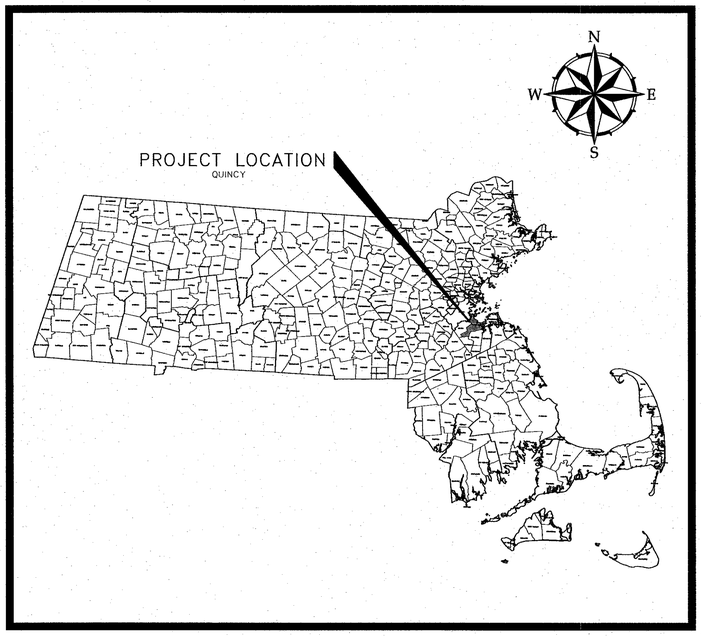

PROJECT LOCATION MAP

50 0 50 100
scale mile

Mayor: Thomas P. Koch

Executive Director of Park & Forestry Department: Christopher Cassani

Purchasing Agent: Kathryn R. Hobin

APRIL 2014

COMMONWEALTH OF MASSACHUSETTS
DAVID A. WHITE
CIVIL
No. 39880
REGISTERED PROFESSIONAL ENGINEER

4/24/14

WOODARD & CURRAN
980 WASHINGTON STREET, SUITE 325
DEDHAM, MASSACHUSETTS 02026
781-251-0200 | www.woodardcurran.com
COMMITMENT & INTEGRITY DRIVE RESULTS

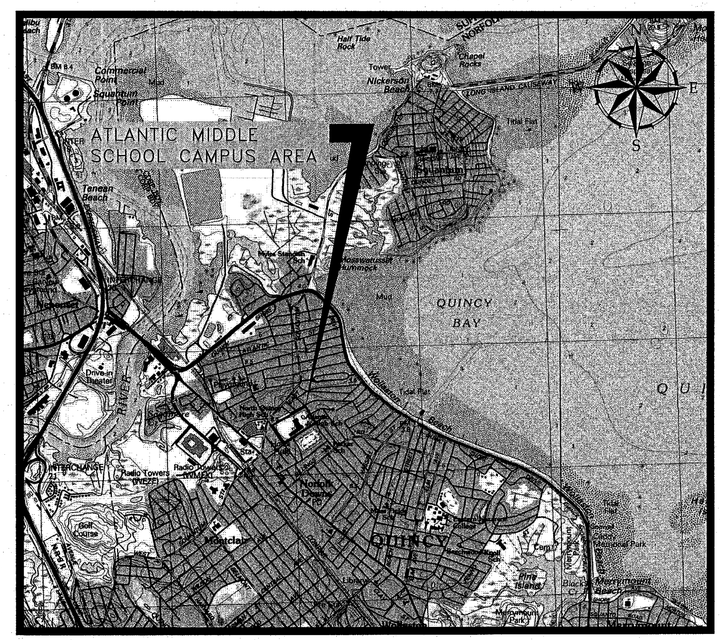

SOURCE: USGS TOPOGRAPHIC MAP

SITE LOCATION MAP

NOT TO SCALE

W&C PROJECT NO. 227591.01

\\PROVIDENCE\Projects\227591 Quincy MA - Atlantic Middle School Campus\wip\Drawings\227591 COV.dwg, Apr 24, 2014 - 5:26pm

GENERAL NOTES

GENERAL

1. COMPLY WITH CURRENT MASSACHUSETTS DEPARTMENT OF TRANSPORTATION HIGHWAY DIVISION CONSTRUCTION STANDARDS AND SPECIFICATIONS AS INDICATED IN THE GENERAL REQUIREMENTS.
2. IMPLEMENT EROSION AND WATER CONTROL MEASURES PER THE GENERAL REQUIREMENTS.
3. SUBMIT TRAFFIC CONTROL PLAN AND IMPLEMENT TRAFFIC CONTROL MEASURES PER GENERAL REQUIREMENTS.
4. IMPLEMENT MEASURES DAILY FOR SAFETY, SECURITY AND PROTECTION OF THE WORK AT THE END OF EACH DAY PER THE GENERAL REQUIREMENTS.
5. STORE MATERIALS WHICH COULD BE A POTENTIAL SOURCE OF STORM WATER POLLUTION SUCH AS GASOLINE, DIESEL FUEL, HYDRAULIC OIL, ETC., IN A STORAGE TRAILER OR COVERED LOCATION OR TAKE OFF-SITE AT THE END OF EACH DAY. LEGALLY DISPOSE OF IN A MANNER CONSISTENT WITH LAWS AND REGULATIONS.
6. REPAIR DAMAGE TO SURFACE FEATURES, SUBSURFACE FEATURES AND SUBSURFACE INFRASTRUCTURE AT NO ADDITIONAL COST TO OWNER. REPLACE PAVEMENT, WALKS, CURBS, ETC. THAT MUST BE CUT OR THAT ARE DAMAGED DURING CONSTRUCTION WITH MATCHING MATERIALS.
7. SET OR RESET ANY EXISTING PROPERTY LINE MONUMENTATON DISTURBED DURING CONSTRUCTION BY A PROFESSIONAL LICENSED SURVEYOR AT NO ADDITIONAL COST TO OWNER.
8. AREAS DISTURBED DURING CONSTRUCTION AND NOT RESTORED WITH IMPERVIOUS SURFACES (BUILDINGS, PAVEMENTS, WALKS, ETC.) SHALL RECEIVE 4 INCHES LOAM AND SEED.
9. THE LIMITS OF WORK DEPICTED ON THE DRAWINGS REPRESENT THE LIMITS OF SURFACE AND SUBSURFACE DISTURBANCE AND REPLACEMENT OF EXISTING SURFACE FEATURES (SUCH AS PAVEMENTS, SIDEWALKS, CURBING AND PAVEMENT MARKINGS). NO ADDITIONAL COMPENSATION SHALL BE PROVIDED FOR WORK PERFORMED BEYOND THESE LIMITS. HOWEVER, TEMPORARY USE OF THE PUBLIC RIGHT-OF-WAY OUTSIDE THE LIMIT OF WORK WILL BE ALLOWED FOR LIMITED SPECIFICALLY ALLOWED ACTIVITIES AND CONTRACTOR OPERATIONS IN ACCORDANCE WITH THE PROVISIONS OUTLINED IN SECTIONS 01 0010 AND 01 1500 OF THE GENERAL REQUIREMENTS.
10. ALL DRAINAGE INLETS WITHIN THE LIMIT OF WORK AND WITHIN 300 FEET DOWN GRADIENT SHALL RECEIVE SILT SACK INLET PROTECTION SEDIMENT CONTROL.

EXISTING CONDITIONS INFORMATION

1. ATLANTIC MIDDLE SCHOOL AREA EXISTING CONDITIONS INFORMATION FROM EXISTING BASE PLAN PROVIDED BY DASILVA SURVEY SERVICES JANUARY 9,2014. CITY OF QUINCY RECORD PLANS WERE UTILIZED TO SUPPLEMENT DASILVA EXISTING CONDITIONS SURVEY WHERE RECORD INFORMATION IS INDICATED ON PLAN.
2. FLOOD ZONE: ALL AREAS OF PROPOSED CONSTRUCTION ARE WITHIN FEDERAL EMERGENCY MANAGEMENT AGENCY'S (FEMA) "ZONE X" OR AS DEPICTED ON FLOOD INSURANCE RATE MAPS 25021C0069E DATED JULY 17, 2012.

LAYOUT

2. SYMBOLS AND LEGENDS OF PROJECT FEATURES ARE GRAPHIC REPRESENTATIONS AND ARE NOT NECESSARILY SCALED TO ACTUAL DIMENSIONS OR LOCATIONS ON THE DRAWINGS. THE CONTRACTOR SHALL REFER TO THE DETAIL SHEET DIMENSIONS, MANUFACTURERS' LITERATURE, SHOP DRAWINGS AND FIELD MEASUREMENTS OF SUPPLIED PRODUCTS FOR LAYOUT OF THE PROJECT FEATURES.
3. DO NOT RELY SOLELY ON ELECTRONIC VERSIONS OF DRAWINGS, SPECIFICATIONS, AND DATA FILES OBTAINED FROM ENGINEER AND FIELD VERIFY LOCATION OF PROJECT FEATURES.
4. VERIFY PROPOSED LAYOUT WITH ITS RELATIONSHIP TO THE EXISTING SITE SURVEY AND VERIFY ALL DIMENSIONS, SITE CONDITIONS, AND MATERIAL SPECIFICATIONS. NOTIFY THE OWNER AND ENGINEER OF ANY DISCREPANCIES BEFORE COMMENCING OR PROCEEDING WITH WORK.
5. COORDINATE WITH THE CITY OF QUINCY'S DPW TO CONDUCT TEST PITS TO VERIFY EXISTING CONDITIONS.
6. VERIFY EXISTING PAVEMENT ELEVATIONS AT INTERFACE WITH PROPOSED PAVEMENTS, AND EXISTING GROUND ELEVATIONS ADJACENT TO MANHOLES AND DRAINAGE OUTLETS TO ASSURE PROPER TRANSITIONS BETWEEN EXISTING AND PROPOSED FACILITIES.

UTILITIES

1. LOCATIONS, SIZES, AND TYPES OF EXISTING UTILITIES SHOWN ARE AN APPROXIMATE REPRESENTATION ONLY. NEITHER THE OWNER NOR THE ENGINEER HAS INDEPENDENTLY VERIFIED THIS INFORMATION SHOWN ON THE DRAWINGS. UTILITY INFORMATION SHOWN DOES NOT GUARANTEE THE ACTUAL EXISTENCE, SERVICEABILITY, OR OTHER DATA CONCERNING THE UTILITIES, NOR DOES IT GUARANTEE THAT ADDITIONAL UTILITIES MAY BE PRESENT THAT ARE NOT SHOWN ON THE DRAWINGS.
2. NOTIFY "DIG-SAFE" (1-888-344-7233) AT LEAST 72 HOURS BEFORE EXCAVATING. NOTIFY OWNERS OF UNDERGROUND UTILITY LINES IN THE AREA OF PROPOSED EXCAVATION AT LEAST TWO WORKING DAYS, BUT NOT MORE THAN TEN WORKING DAYS, PRIOR TO COMMENCEMENT OF EXCAVATION OR DEMOLITION. MAINTAIN WATER, GAS, SEWER, ELECTRIC AND OTHER UTILITIES AT ALL TIMES DURING CONSTRUCTION.
3. VERIFY AND DETERMINE THE EXACT LOCATIONS, SIZES, AND ELEVATIONS OF THE POINTS OF CONNECTIONS TO EXISTING UTILITIES AND CONFIRM THERE ARE NO INTERFERENCES WITH EXISTING UTILITIES AND THE PROPOSED UTILITY ROUTES, INCLUDING ROUTES WITHIN THE PUBLIC RIGHTS OF WAY.
4. WHERE AN EXISTING UTILITY IS FOUND TO CONFLICT WITH THE PROPOSED WORK OR EXISTING CONDITIONS DIFFER FROM THOSE SHOWN SUCH THAT THE WORK CANNOT BE COMPLETED AS INTENDED, DETERMINE THE LOCATION, ELEVATION, AND SIZE OF THE UTILITY AND FURNISH TO THE ENGINEER FOR THE RESOLUTION OF THE CONFLICT PER THE GENERAL AND SUPPLEMENTARY CONDITIONS.
5. USE CONTROL DENSITY FILL (CDF) BEDDING MATERIAL FOR CONNECTIONS BETWEEN EXISTING AND PROPOSED PIPE AND FOR EXISTING UTILITIES EXPOSED DURING CONSTRUCTION. REFER TO TRENCH AND UTILITY CROSSING DETAILS.
6. SET MANHOLE RIMS, INVERTS OF SEWERS, DRAINS, AND DITCHES TO MATCH EXISTING UNLESS SPECIFIED BY PLAN OR DIRECTED OTHERWISE BY THE ENGINEER.
7. RIM ELEVATIONS FOR DRAIN AND SEWER MANHOLES, WATER VALVE COVERS, GAS GATES, ELECTRIC AND TELEPHONE PULL BOXES, AND OTHER SUCH ITEMS, ARE APPROXIMATE AND SHALL BE SET/RESET AS FOLLOWS:
   - A. PAVEMENTS AND CONCRETE SURFACES: FLUSH
   - B. ALL SURFACES ALONG ACCESSIBLE ROUTES: FLUSH
   - C. LANDSCAPE OR LOAM AND SEED AREAS: ONE INCH ABOVE SURROUNDING AREA AND TAPER EARTH TO THE RIM ELEVATION.
   - D. CONTRACTOR SHALL ADJUST ALL UTILITY CASTINGS WITHIN PAVED AREA FLUSH WITH PAVEMENT
8. FILL DRAINAGE INFRASTRUCTURE ABANDONED IN PLACE WITH CONTROL DENSITY FILL (CDF).
9. ADJUSTMENTS OF CASTINGS SHALL BE CONSIDERED INCIDENTAL TO THE WORK AND WILL NOT BE MEASURED OR PAID FOR SEPARATELY.
10. CONTRACTOR SHALL INSTALL CONTROLLED DENSITY FILL (CDF) FOR TRENCHES CONTAINING PIPES WITH LESS THAN THREE FEET (3') OF COVER WITHIN PAVED AREAS.

DEMOLITION

1. REMOVE AND DISPOSE OF EXISTING DRAINAGE MANHOLES, INTERNAL CLEANINGS, PIPE, AND FITTINGS AND ALL DEBRIS AS SHOWN ON DRAWINGS UNLESS OTHERWISE INDICATED.
2. DELIVER DRAINAGE STRUCTURE FRAMES, GRATES AND COVERS REMOVED TO THE QUINCY DPW YARD AS DIRECTED BY THE ENGINEER.
3. LEGALLY DISPOSE OF EXISTING DEBRIS PER LAWS AND REGULATIONS.
4. IF SUSPECTED CONTAMINATED SOIL, GROUNDWATER, AND OTHER MEDIA ARE ENCOUNTERED DURING EXCAVATION AND CONSTRUCTION BASED ON VISUAL, ODOR, OR OTHER EVIDENCE, STOP WORK IN THE VICINITY OF THE SUSPECT MATERIAL TO AVOID FURTHER SPREADING OF THE MATERIAL AND COMPLY WITH THE REQUIREMENTS SET FORTH IN THE GENERAL AND SUPPLEMENTARY CONDITIONS.

ABBREVIATIONS

ACI	AMERICAN CONCRETE INSTITUTE
ADJ.	ADJUST
ALUM.	ALUMINUM
APPROX.	APPROXIMATE
ASTM	AMERICAN SOCIETY OF TESTING MATERIALS
BB	BIT. BERM
BC	BOTTOM OF CURB
BIT.	BITUMINOUS
BLDG.	BUILDING
BOT	BOTTOM
BW	BOTTOM OF WALL
C. to C.	CENTER TO CENTER
CB	CATCH BASIN
CC	CONCRETE CURB
CDF	CONTROL DENSITY FILL
CIPP	CURED-IN-PLACE-PIPE LINING
CITS	CLEAN, INSPECT, TEST, & SEAL
℄	CENTER LINE
CLF	CHAINLINK FENCE
CMP	CORRUGATED METAL PIPE
CONC.	CONCRETE
CONT.	CONTINUOUS
CORR.	CORRUGATED
CU	COPPER
CW	CROSS WALK
D	DRAIN
D.I.	DUCTILE IRON
DIA.	DIAMETER
ø	DIAMETER
DIAG.	DIAGONALLY
DMH	DRAIN MANHOLE
DYL	DOUBLE YELLOW LINE
EA.	EACH
ELECT.	ELECTRICAL
ELEV. / EL.	ELEVATION
EOP	EDGE OF PAVEMENT
EX.	EXISTING
FEMA	FEDERAL EMERGENCY MANAGEMENT AGENCY
FT.	FOOT
FTG.	FITTING
G	GAS
GALV.	GALVANIZED
H	HEIGHT
HDPE	HIGH DENSITY POLYETHYLENE
HOR.	HORIZONTAL
I.D.	INSIDE DIAMETER
I= /INV.	INVERT
L	LENGTH
LB	POUND
LST	LANDSCAPE TIMBERS
LW / L.O.W.	LIMIT OF WORK
MAX.	MAXIMUM
MECH.	MECHANICAL
MFG.	MANUFACTURERS
MH	MANHOLE
MIN.	MINIMUM
MWRA	MASSACHUSETTS WATER RESOURCE AUTHORITY
NOM.	NOMINAL
N/A	NOT APPLICABLE
N/F	NOW OR FORMERLY
OSHA	OCCUPATIONAL SAFETY AND HEALTH ADMINISTRATION
O.C.	ON CENTER
O.C.E.W.	ON CENTER EACH WAY
O.D.	OUTSIDE DIAMETER
ℙ	PROPERTY LINE
PSI	POUNDS PER SQUARE INCH
PVC	POLYVINYL CHLORIDE
R=	RIM= RIM ELEVATION
R&D	REMOVE AND DISPOSE
RCP	REINFORCED CONCRETE PIPE
REC	RECORD
RET	RETAINING
S	SEWER
S.S.	STAINLESS STEEL
SCH.	SCHEDULE
SECT.	SECTION
SF	SQUARE FEET
SGC	SLOPED GRANITE CURB
SHLDR.	SHOULDER
SHT.	SHEET
STF	STOCKADE FENCE
SQ.	SQUARE
TBM	TEMPORARY BENCH MARK
TW	TOP OF WALL
THK.	THICK
TW	TOP OF WALL
TYP.	TYPICAL
UGE	UNDERGROUND ELECTRIC
UGT	UNDERGROUND TELEPHONE
VERT.	VERTICAL
VGC	VERTICAL GRANITE CURB
W	WATER
W/	WITH
WF	WOOD FRAME
WT	WATER TIGHT

SHEET INDEX

SHEET NO.	SHEET TITLE
C-001	COVER SHEET
C-100	NOTES, LEGEND AND ABBREVIATIONS
C-101	OVERALL LOCATION, KEYPLAN & SURVEY CONTROL
C-102	EXISTING CONDITIONS PLAN 1
C-103	EXISTING CONDITIONS PLAN 2
C-104	EXISTING CONDITIONS PLAN 3
C-105	EXISTING CONDITIONS PLAN 4
C-200	SITE PLAN 1
C-201	SITE PLAN 2
C-202	GRADING AND DRAINAGE PLAN 1
C-203	GRADING AND DRAINAGE PLAN 2
C-300	PROJECT DETAILS 1
C-301	PROJECT DETAILS 2
C-302	PROJECT DETAILS 3
C-303	PROJECT DETAILS 4
S-01	STRUCTURAL DETAILS 1
S-02	STRUCTURAL DETAILS 2

LEGEND

	EXISTING	PROPOSED
CONTOUR (1' OR 2' INTERVAL)	50	50
CONTOUR (INDEX)	50	50
SPOT ELEVATION	+ 50.0	+ 50.0
WATER MAIN	6" W	
STORM DRAIN PIPE	18"D SD	
UNDERGROUND ELECTRIC	E E	
UNDERGROUND TELEPHONE	T T T	
GAS LINE	4" G	
SANITARY SEWER	8" SS	
OVERHEAD ELECTRIC	OHE	
FENCE		
EDGE OF PAVEMENT		
EASEMENT		
GUARDRAIL		
CURB		
TREE LINE		
EROSION CONTROL		
TREE/PLANTING		
STONEWALL		
SAWCUT		
LIMIT OF WORK		LW
UTILITY POLE W/GUY		
UTILITY POLE		
HYDRANT		
CATCH BASIN		
DRAIN MANHOLE		
SEWER MANHOLE		
TELECOM MANHOLE		
(2) SIGNS (1) POST		
SIGN		
GAS GATE	GG	
WATER GATE	WG	
DECIDUOUS TREE		
FLAG POLE	FP	
TEMPORARY BENCHMARK		
TEST PIT	TP-X	TP-X
UNKNOWN MANHOLE		
LIGHT POLE		
SURVEY CONTROL / BENCHMARK		
SAWCUT LINE AND LIMIT OF NEW PAVEMENT		
TREE PROTECTION		

WOODARD & CURRAN
980 Washington Street, Suite 325N
Dedham, Massachusetts 02026
800.446.5518 | www.woodardcurran.com
COMMITMENT & INTEGRITY DRIVE RESULTS

THIS DOCUMENT IS THE PROPERTY OF WOODARD & CURRAN INC. AND ITS CLIENT. REPRODUCTION OR MODIFICATION WITHOUT WRITTEN PERMISSION IS PROHIBITED.

COMMONWEALTH OF MASSACHUSETTS DAVID A. WHITE No. 39880 REGISTERED PROFESSIONAL ENGINEER

REV.	DESCRIPTION	DATE

DESIGNED BY: R.D | CHECKED BY: DAW
DRAWN BY: PMM

NOTES, LEGENDS AND ABBREVIATIONS

CITY OF QUINCY, MASSACHUSETTS
DEPARTMENT OF PARK AND FORESTRY
1 MERRYMOUNT PARKWAY QUINCY,MA

ATLANTIC MIDDLE SCHOOL CAMPUS
IMPROVEMENT PROJECT

JOB NO.: 227591.01
DATE: APRIL 2014
SCALE: NOT TO SCALE
SHEET: 2 OF 17

C-100

980 Washington Street, Suite 325N
Dedham, Massachusetts 02026
800.446.5518 | www.woodardcurran.com

WOODARD & CURRAN

COMMITMENT & INTEGRITY DRIVE RESULTS

THE DOCUMENT IS THE PROPERTY OF WOODARD & CURRAN INC. AND ITS CLIENT. REPRODUCTION OR MODIFICATION WITHOUT WRITTEN PERMISSION IS PROHIBITED.

COMMONWEALTH OF MASSACHUSETTS
DAVID A. WHITE
CIVIL
No. 38960
REGISTERED PROFESSIONAL ENGINEER

REV	DESCRIPTION	DATE

DESIGNED BY: RJD
CHECKED BY: DAW
DRAWN BY: PMM

OVERALL LOCATION, KEY PLAN & SURVEY CONTROL

CITY OF QUINCY, MASSACHUSETTS
DEPARTMENT OF PARK AND FORESTRY
1 MERRYMOUNT PARKWAY QUINCY,MA

ATLANTIC MIDDLE SCHOOL CAMPUS
IMPROVEMENT PROJECT

JOB NO.: 227591.01
DATE: APRIL 2014
SCALE: 1"=40'
SHEET: 3 OF 17

C-101

GENERAL NOTES:

1. THE LIMITS OF THE ATLANTIC MIDDLE SCHOOL PROJECT ARE SHOWN ON THE CITY OF QUINCY ASSESSOR'S MAPS 6023 AND 6024 THEREON.

2. PROPERTY LINE CONFIGURATION AS SHOWN HEREON WAS COMPILED FROM RECORD PLANS AND ASSESSORS INFORMATION, AND SUPPLEMENTED BY ON-THE-GROUND FIELD SURVEY BY THIS FIRM. BEING THAT A PROPERTY LINE RETRACEMENT OR VERIFICATION SURVEY HAS NOT BEEN PERFORMED BY DASILVA SURVEY SERVICES, THIS FIRM BEARS NO RESPONSIBILITY FOR THE DEPICTION THEREOF.

3. EXISTING CONDITIONS DETAIL AS SHOWN HEREON WAS DERIVED FROM ACTUAL FIELD LOCATION DURING DECEMBER OF 2013 BY DASILVA SURVEY SERVICES.

4. PRIOR TO CONSTRUCTION OR ANY RELIANCE HEREON, THE LOCATION OF REMAINING EXISTING DETAIL WITH RESPECT TO THE DATA SHOWN HEREON MUST BE VERIFIED BY A COMPREHENSIVE REVIEW BY THIS FIRM.

5. LOCATION AND DEPTH OF UNDERGROUND UTILITIES IS APPROXIMATE ONLY, AND IS NOT WARRANTED TO BE CORRECT. UNDERGROUND UTILITIES ARE SHOWN BASED ON A VISUAL INSPECTION OF SURFACE OBSERVABLE FEATURES ONLY, AND HAVE BEEN FIELD INSPECTED FOR CONNECTIONS WHERE POSSIBLE. ADDITIONAL UTILITIES MAY EXIST WHICH ARE NOT INDICATED ON THESE PLANS. ALL EXISTING UTILITIES SHALL BE VERIFIED FOR SERVICE, SIZE, INVERT ELEVATION, LOCATIONS, ETC. PRIOR TO NEW CONNECTIONS TO OR RELOCATION OF SAME. CONTRACTOR MUST NOTIFY DIG-SAFE AT 1-888-344-7233 AT LEAST 72 HOURS PRIOR TO ANY CONSTRUCTION. NOTIFY THIS FIRM IN WRITING OF ANY AND ALL DISCREPANCIES PRIOR TO COMMENCING ANY WORK.

6. THE ELEVATIONS DEPICTED HEREON ARE REFERENCED TO THE CITY OF QUINCY DATUM.

7. THE PROJECT LIMITS ARE LOCATED IN A FLOOD ZONE X, AS INDICATED ON COMMUNITY PANEL NUMBER 25021C0069E HAVING AN EFFECTIVE DATE OF JULY 17, 2012. THE FLOOD LINES AS DELINEATED HEREON ARE SHOWN BASED ON A SCALED GRAPHICAL REPRESENTATION OF THE HEREIN MENTIONED FLOOD MAP.

8. DATUM CONVERSIONS: NAVD 88 TO NGVD 1929 = (0.81)
NAVD 88 TO CITY OF QUINCY DATUM = (6.63)
NAVD = NORTH AMERICAN VERTICAL DATUM OF 1988
NGVD = NATIONAL GEODETIC VERTICAL DATUM OF 1929

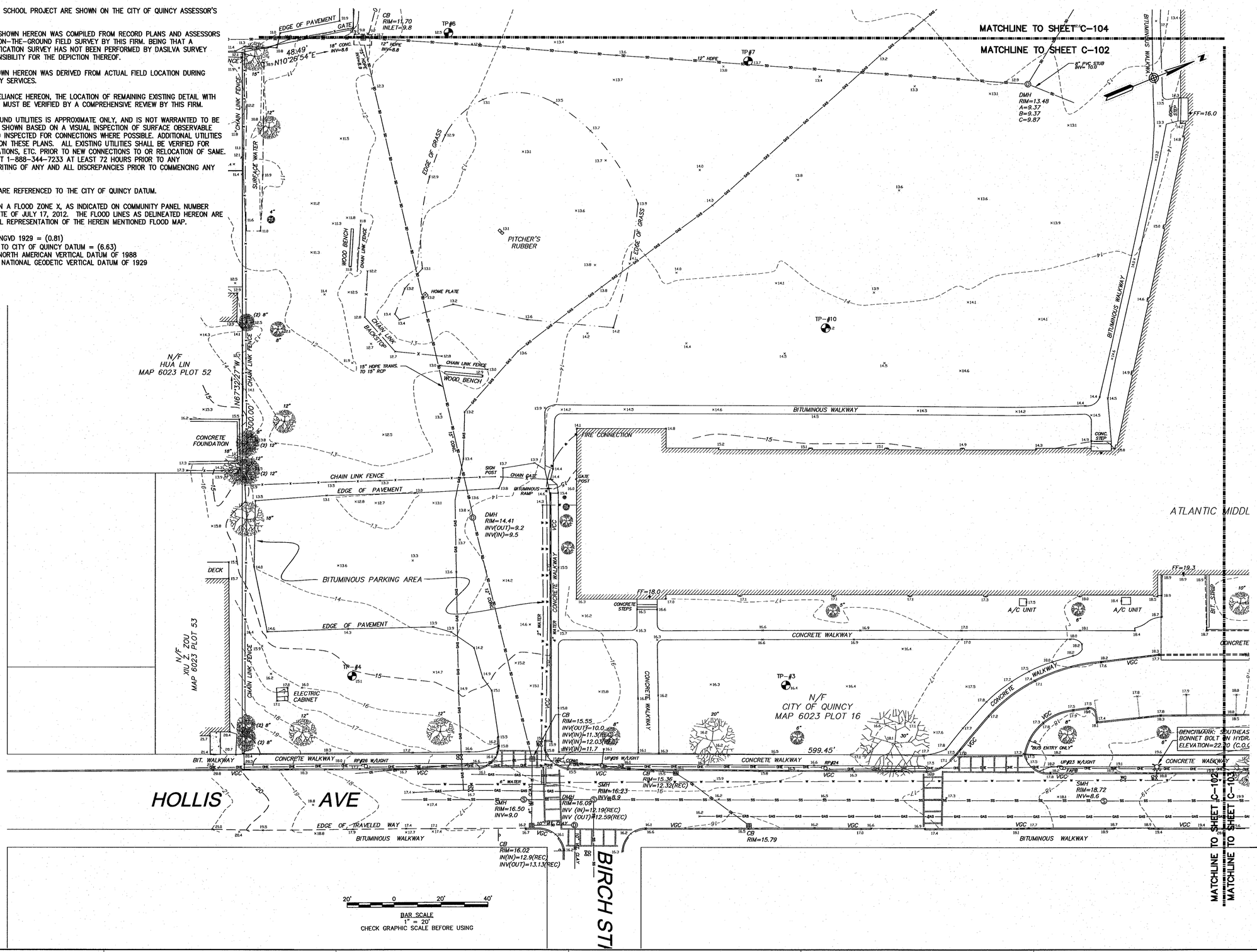

20' 0 20' 40'

BAR SCALE
1" = 20'
CHECK GRAPHIC SCALE BEFORE USING

980 Washington Street, Suite 325N
Dedham, Massachusetts 02026
800.446.5518 | www.woodardcurran.com

COMMITMENT & INTEGRITY DRIVE RESULTS

WOODARD & CURRAN

THE DOCUMENT IS THE PROPERTY OF WOODARD & CURRAN INC. AND TO CLIENT. REPRODUCTION OR MODIFICATION WITHOUT WRITTEN PERMISSION IS PROHIBITED.

COMMONWEALTH OF MASSACHUSETTS
DAVID A. WHITE
CIVIL
No. 38860
PROFESSIONAL ENGINEER
4/17/14

REV	DESCRIPTION	DATE

DESIGNED BY: RJD
CHECKED BY: DAW
DRAWN BY: PAM

EXISTING CONDITIONS PLAN 1

CITY OF QUINCY, MASSACHUSETTS
DEPARTMENT OF PARK AND FORESTRY
1 MERRYMOUNT PARKWAY QUINCY,MA

ATLANTIC MIDDLE SCHOOL CAMPUS
IMPROVEMENT PROJECT

JOB NO.: 227591.01
DATE: APRIL 2014
SCALE: 1"=20'
SHEET: 4 OF 17

C-102

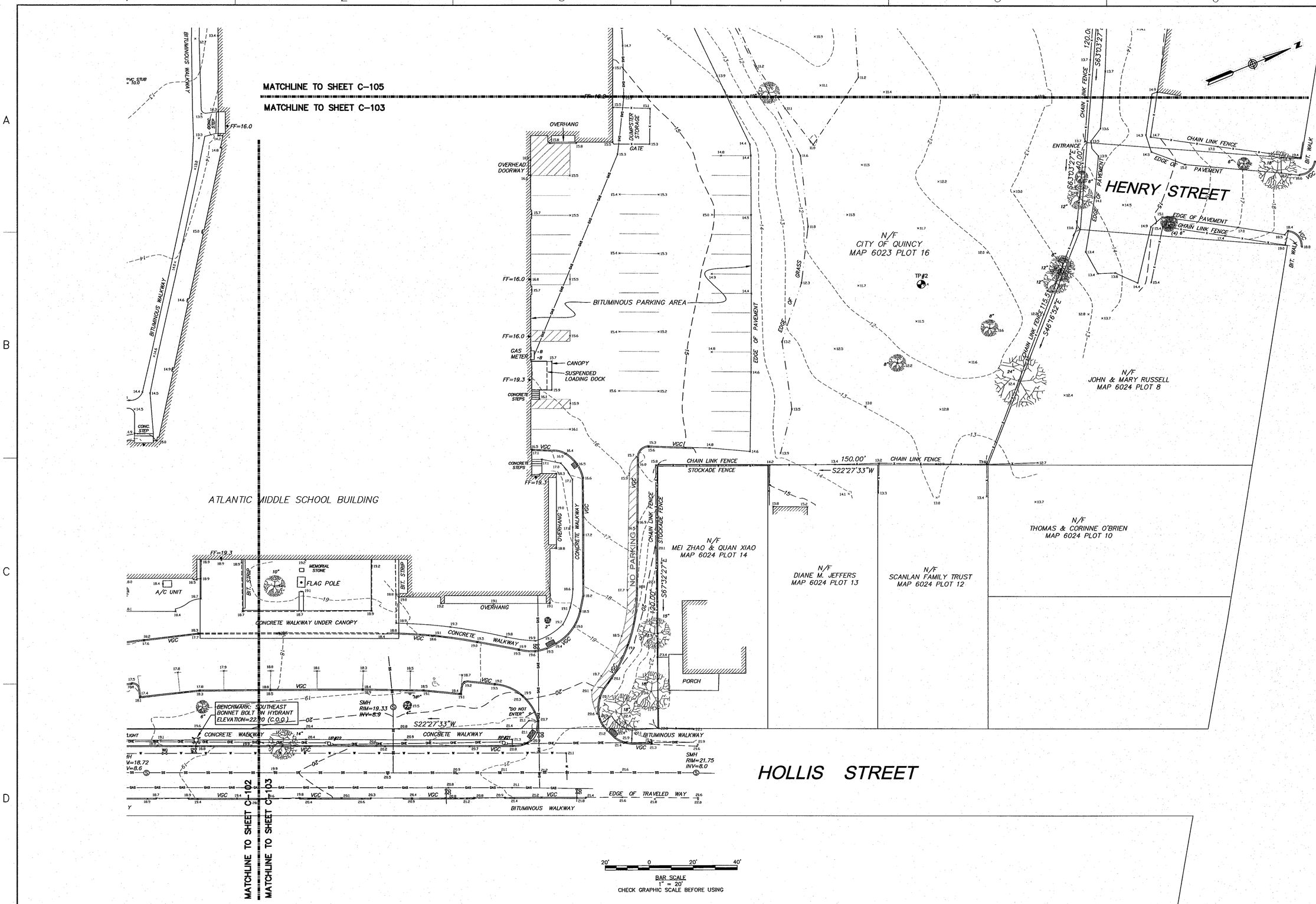

980 Washington Street, Suite 325N
Dedham, Massachusetts 02026
800.446.5518 | www.woodardcurran.com

COMMITMENT & INTEGRITY DRIVE RESULTS

WOODARD & CURRAN

THE SOLE PROPERTY OF WOODARD & CURRAN INC. AND IT IS NOT TO BE REPRODUCED OR MODIFIED WITHOUT WRITTEN PERMISSION IS PROHIBITED.

COMMONWEALTH OF MASSACHUSETTS
DAVID A. WHITE
No. 39880
PROFESSIONAL ENGINEER

REV	DESCRIPTION	DATE

DESIGNED BY: RJD
DRAWN BY: PAM
CHECKED BY: DAW

EXISTING CONDITIONS PLAN 2

CITY OF QUINCY, MASSACHUSETTS
DEPARTMENT OF PARK AND FORESTRY
1 MERRYMOUNT PARKWAY QUINCY, MA

ATLANTIC MIDDLE SCHOOL CAMPUS
IMPROVEMENT PROJECT

JOB NO.: 227591.01
DATE: APRIL 2014
SCALE: 1"=20'
SHEET: 5 OF 17

C-103

MATCHLINE TO SHEET C-105

MATCHLINE TO SHEET C-104

WILSON COURT

N/F CHUNG VAN & HANG THANH PHAM MAP 6023 PLOT 20

N/F PHO PHUNG & CAM LUU MAP 6023 PLOT 21

N/F JOHN & HEATHER DRAKE MAP 6023 PLOT 22

N/F POK WAI & WAI LING LEE MAP 6023 PLOT 23

N/F 200 NEWBURY AVE CONDOMINIUM MAP 6023 PLOT 24

N/F ATLANTIC HOUSE CONDO MAP 6023 PLOT 15

N/F FIRST QUINCY CORPORATION MAP 6023 PLOT 14

N/F CARL MATTSON MAP 6023 PLOT 43

N/F JULIE A. HEALY MAP 6023 PLOT 42

N/F CITY OF QUINCY MAP 6023 PLOT 16

N/F KAI WIN MAP 6024

S67°51'20"E 173.50'

N27°54'48"E 439.31'

N67°51'20"W 453.39'

S26°56'36"W 15.00'

S63°03'27"E 120.09'

S43°49'50"E 19.92'

N10°26'54"E 48.49'

BLOCK RETAINING WALL

CHAIN LINK FENCE

GRAVEL PATH

BITUMINOUS DRIVE

METAL BENCH

CHAIN LINK BACKSTOP

HOME PLATE

BITUMINOUS WALKWAY

CONC. WALK

DRAINAGE SWALE

BITUMINOUS PARKING AREA

VINYL FENCE

EDGE OF PAVEMENT

STOCKADE FENCE

GATE POST

TP-#6

TP-#7

TP-#8

TP-#9

4" PVC INV=25.6

8" PVC STUB INV=10.3

CB RIM=12.31 INV(OUT)=9.9 INV(IN)=10.0

CB RIM=11.70 INL ET=9.8

18" CONC. INV=8.6

12" HDPE INV=8.6

8" PVC STUB INV=10.0

10" PVC

10" BCP

JERSEY BARRIER

EXPOSED PAVEMENT

CONCRETE STEP

CONCRETE STEPS

OVERHEAD DOORWAY

FF=15.9

FF=16

MATCHLINE TO SHEET C-104

~~MATCHLINE TO SHEET C-102~~

BAR SCALE 1" = 20'

CHECK GRAPHIC SCALE BEFORE USING

980 Washington Street, Suite 325N
Dedham, Massachusetts 02026
800.446.5518 | www.woodardcurran.com

COMMITMENT & INTEGRITY DRIVE RESULTS

WOODARD & CURRAN

THE PROPERTY OF WOODARD & CURRAN INC. AND THE CLIENT. REPRODUCTION OR MODIFICATION WITHOUT WRITTEN PERMISSION IS PROHIBITED.

COMMONWEALTH OF MASSACHUSETTS DAVID A. CYR No. 38880 LICENSED PROFESSIONAL ENGINEER

REV	DESCRIPTION	DATE

DESIGNED BY: RJD
DRAWN BY: PMM
CHECKED BY: DAW

EXISTING CONDITIONS PLAN 3

CITY OF QUINCY, MASSACHUSETTS
DEPARTMENT OF PARK AND FORESTRY
1 MERRYMOUNT PARKWAY QUINCY,MA

ATLANTIC MIDDLE SCHOOL CAMPUS
IMPROVEMENT PROJECT

JOB NO.: 227591.01
DATE: APRIL 2014
SCALE: 1"=20'
SHEET: 6 OF 17

C-104

980 Washington Street, Suite 325N
Dedham, Massachusetts 02026
800.446.5518 | www.woodardcurran.com

WOODARD & CURRAN
COMMITMENT & INTEGRITY DRIVE RESULTS

THE PROPERTY OF WOODARD & CURRAN, INC. AND ITS CLIENT. REPRODUCTION OR MODIFICATION WITHOUT WRITTEN PERMISSION IS PROHIBITED.

COMMONWEALTH OF MASSACHUSETTS
DAVID A. WHITE
CIVIL
No. 38980
REGISTERED PROFESSIONAL ENGINEER

REV.	DESCRIPTION	DATE

DESIGNED BY: RJD
DRAWN BY: PMM
CHECKED BY: DAW

EXISTING CONDITIONS PLAN 4

CITY OF QUINCY, MASSACHUSETTS
DEPARTMENT OF PARK AND FORESTRY
1 MERRYMOUNT PARKWAY QUINCY,MA

ATLANTIC MIDDLE SCHOOL CAMPUS
IMPROVEMENT PROJECT

JOB NO.: 227591.01
DATE: APRIL 2014
SCALE: 1"=20'
SHEET: 7 OF 17

C-105

REGULATORY SIGN SUMMARY

M.U.T.C.D. NUMBER	SPECIFICATION WIDTH	SPECIFICATION HEIGHT	DESC.	QUANT.
R1-1	24"	24"	STOP	2
R5-1	24"	24"	DO NOT ENTER	2
R6-1	36"	12"	ONE WAY	3
R7-8	12"	18"	RESERVED PARKING	1
R7-8A	12"	6"	VAN ACCESSIBLE	1

REGULATORY SIGN SUMMARY

M.U.T.C.D. NUMBER	SPECIFICATION WIDTH	SPECIFICATION HEIGHT	DESC.	QUANT.
R7-1 (BI-DIRECTIONAL ARROW)	12"	18"	NO PARKING ANY TIME	3
W11-2	24"	24"		6
W16-7pL	24"	12"		4
W16-9p	24"	12"	AHEAD	2

TOTAL EXISTING PARKING	59 SPACES
TOTAL DISPLACED PARKING	25 SPACES
TOTAL PROPOSED PARKING	87 SPACES
NET GAIN	**28 SPACES**

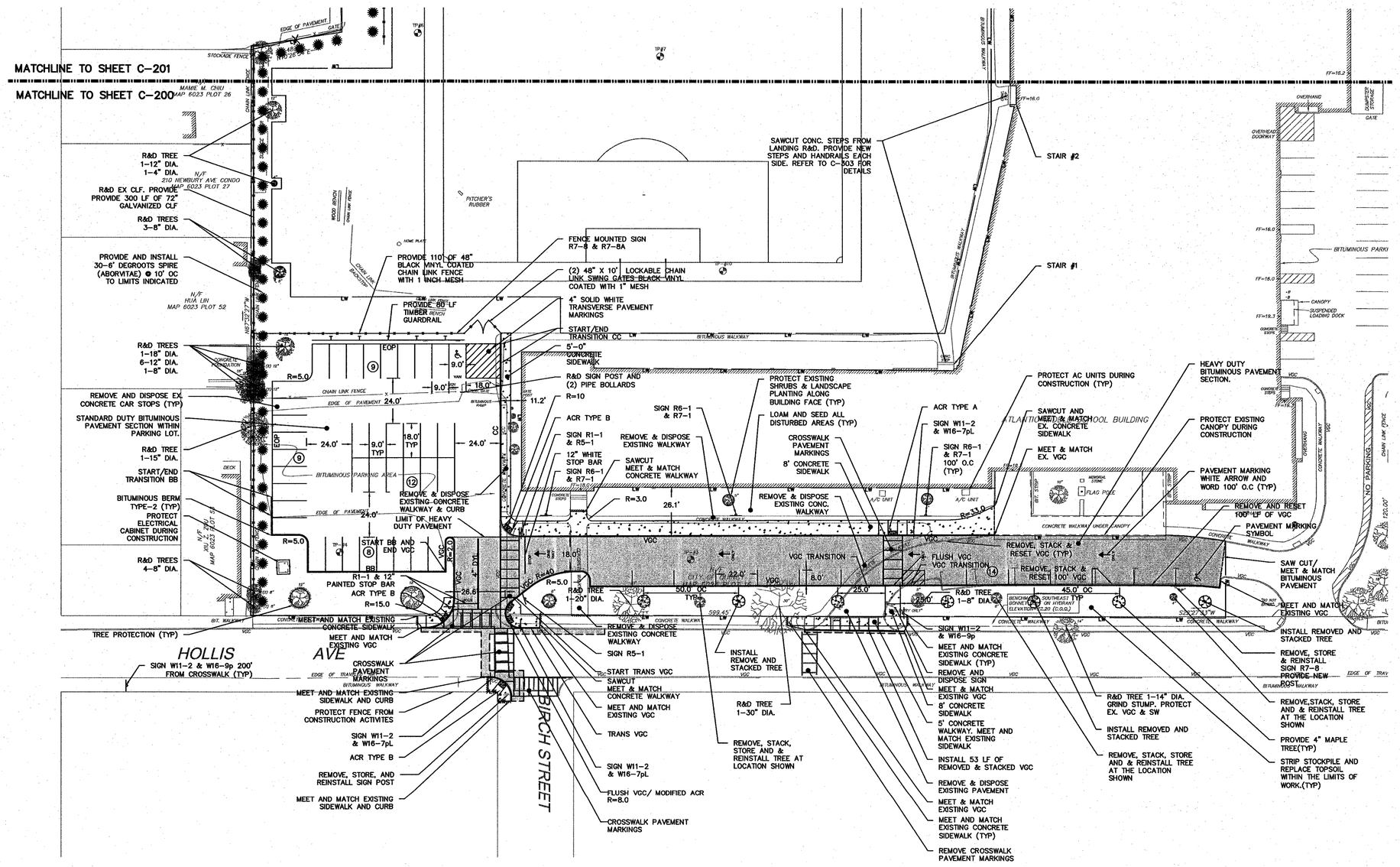

HEAVY DUTY PAVEMENT SECTION

STANDARD DUTY PAVEMENT SECTION

980 Washington Street, Suite 325N
Dedham, Massachusetts 02026
800.446.5518 | www.woodardcurran.com
COMMITMENT & INTEGRITY DRIVE RESULTS
WOODARD & CURRAN

THIS DOCUMENT IS THE PROPERTY OF WOODARD & CURRAN INC. AND TO CLIENT. REPRODUCTION OR MODIFICATION WITHOUT WRITTEN PERMISSION IS PROHIBITED.

COMMONWEALTH OF MASSACHUSETTS DAVID A. WHITE CIVIL No. 38880 REGISTERED PROFESSIONAL ENGINEER 4/23/2014

REV	DESCRIPTION	DATE

DESIGNED BY: RJD | CHECKED BY: DAW
DRAWN BY: PMM | 227591 SITE LAYOUT.dwg

SITE PLAN 1

CITY OF QUINCY, MASSACHUSETTS
DEPARTMENT OF PARK AND FORESTRY
1 MERRYMOUNT PARKWAY QUINCY,MA

ATLANTIC MIDDLE SCHOOL CAMPUS IMPROVEMENT PROJECT

JOB NO.: 227591.01
DATE: APRIL 2014
SCALE: 1"=30'
SHEET: 8 OF 17

C-200

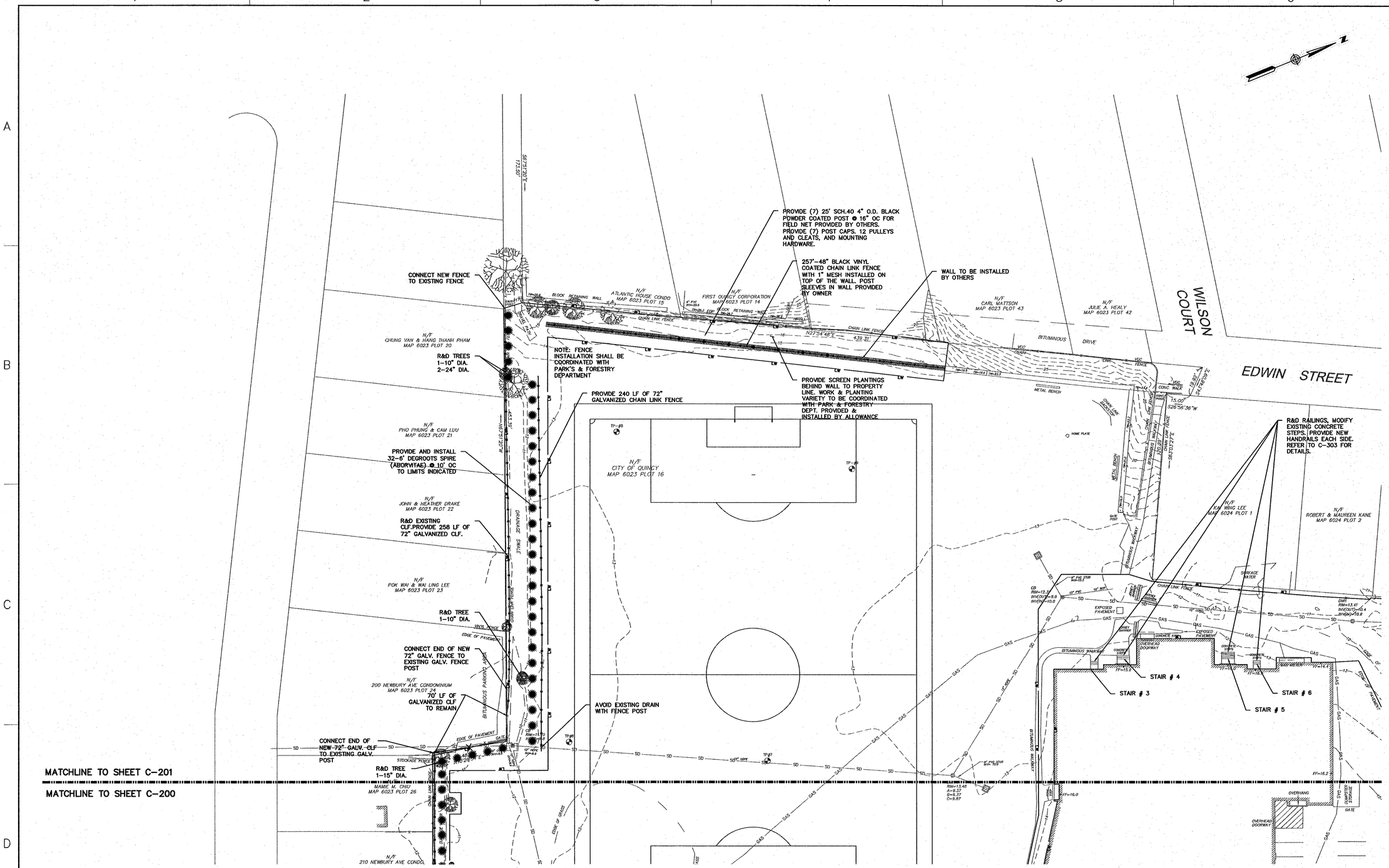

30' 0 30' 60'

BAR SCALE
1" = 30'
CHECK GRAPHIC SCALE BEFORE USING

980 Washington Street, Suite 325N
Dedham, Massachusetts 02026
800.446.5518 | www.woodardcurran.com

WOODARD & CURRAN

COMMITMENT & INTEGRITY DRIVE RESULTS

THE DOCUMENT IS THE PROPERTY OF WOODARD & CURRAN INC. AND TO CLIENT. REPRODUCTION OR MODIFICATION WITHOUT WRITTEN PERMISSION IS PROHIBITED.

COMMONWEALTH OF MASSACHUSETTS
DAVID A. WHITE
No. 39560
REGISTERED PROFESSIONAL ENGINEER

REV	DESCRIPTION	DATE

DESIGNED BY: RJD | CHECKED BY: DAW
DRAWN BY: PMM | 227591 SITE LAYOUT.dwg

SITE PLAN 2

CITY OF QUINCY, MASSACHUSETTS
DEPARTMENT OF PARK AND FORESTRY
1 MERRYMOUNT PARKWAY QUINCY,MA

ATLANTIC MIDDLE SCHOOL CAMPUS
IMPROVEMENT PROJECT

JOB NO.: 227591.01
DATE: APRIL 2014
SCALE: 1"=30'
SHEET: 9 OF 17

C-201

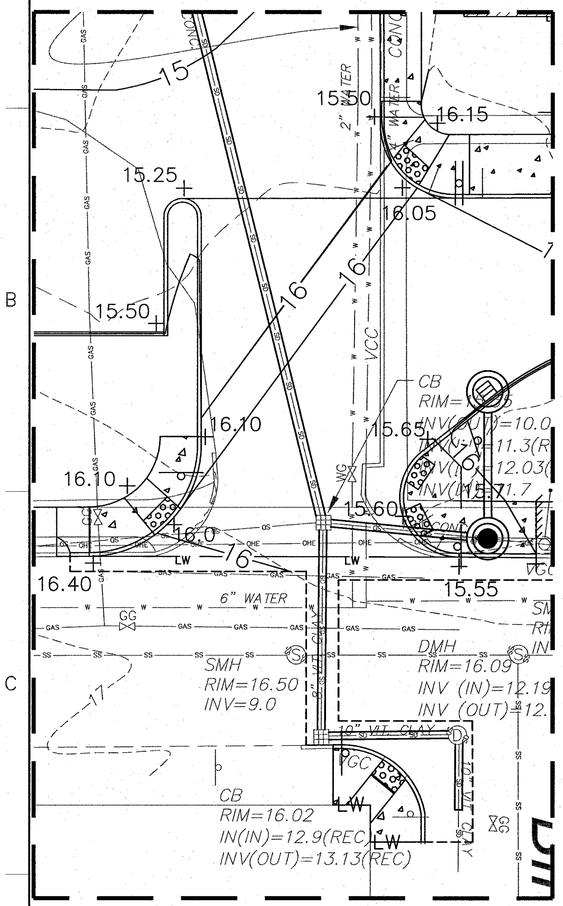

INSET A

10' 0 10' 20'

BAR SCALE
1" = 10'
CHECK GRAPHIC SCALE BEFORE USING

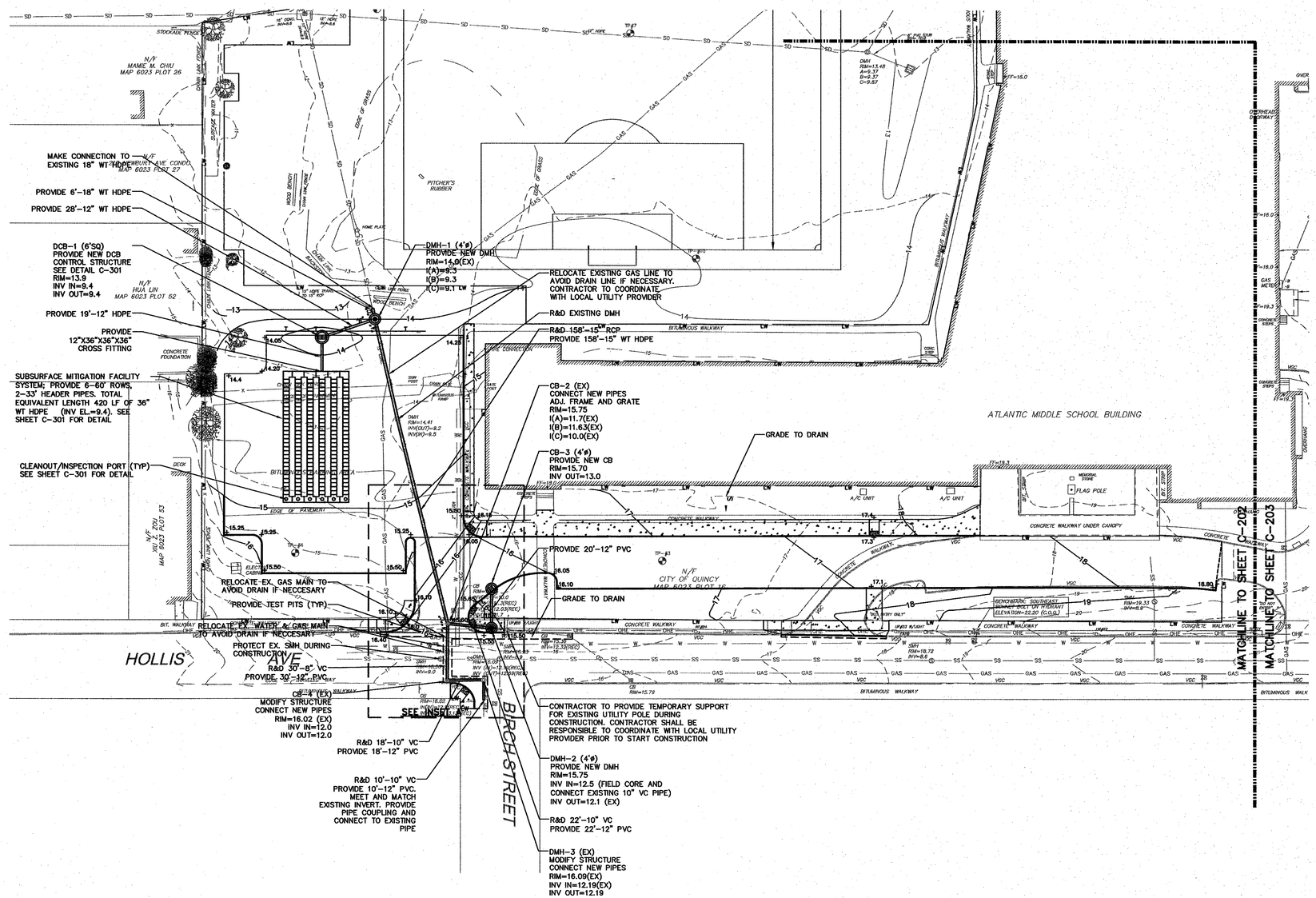

30' 0 30' 60'

BAR SCALE
1" = 30'
CHECK GRAPHIC SCALE BEFORE USING

980 Washington Street, Suite 325N
Dedham, Massachusetts 02026
800.446.5518 | www.woodardcurran.com

WOODARD & CURRAN

COMMITMENT & INTEGRITY DRIVE RESULTS

THIS DOCUMENT IS THE PROPERTY OF WOODARD & CURRAN INC. AND ITS CONTENT MAY NOT BE COPIED OR REPRODUCED WITHOUT WRITTEN PERMISSION.

COMMONWEALTH OF MASSACHUSETTS
DAVID A. WHITE
No. 30860
PROFESSIONAL ENGINEER

REV	DESCRIPTION	DATE

DESIGNED BY: RJD
DRAWN BY: PMM
CHECKED BY: DAW
227591 SITE LAYOUT.dwg

GRADING AND DRAINAGE PLAN 1

CITY OF QUINCY, MASSACHUSETTS
DEPARTMENT OF PARK AND FORESTRY
1 MERRYMOUNT PARKWAY QUINCY,MA

ATLANTIC MIDDLE SCHOOL CAMPUS
IMPROVEMENT PROJECT

JOB NO.: 227591.01
DATE: APRIL 2014
SCALE: AS SHOWN
SHEET: 10 OF 17

C-202

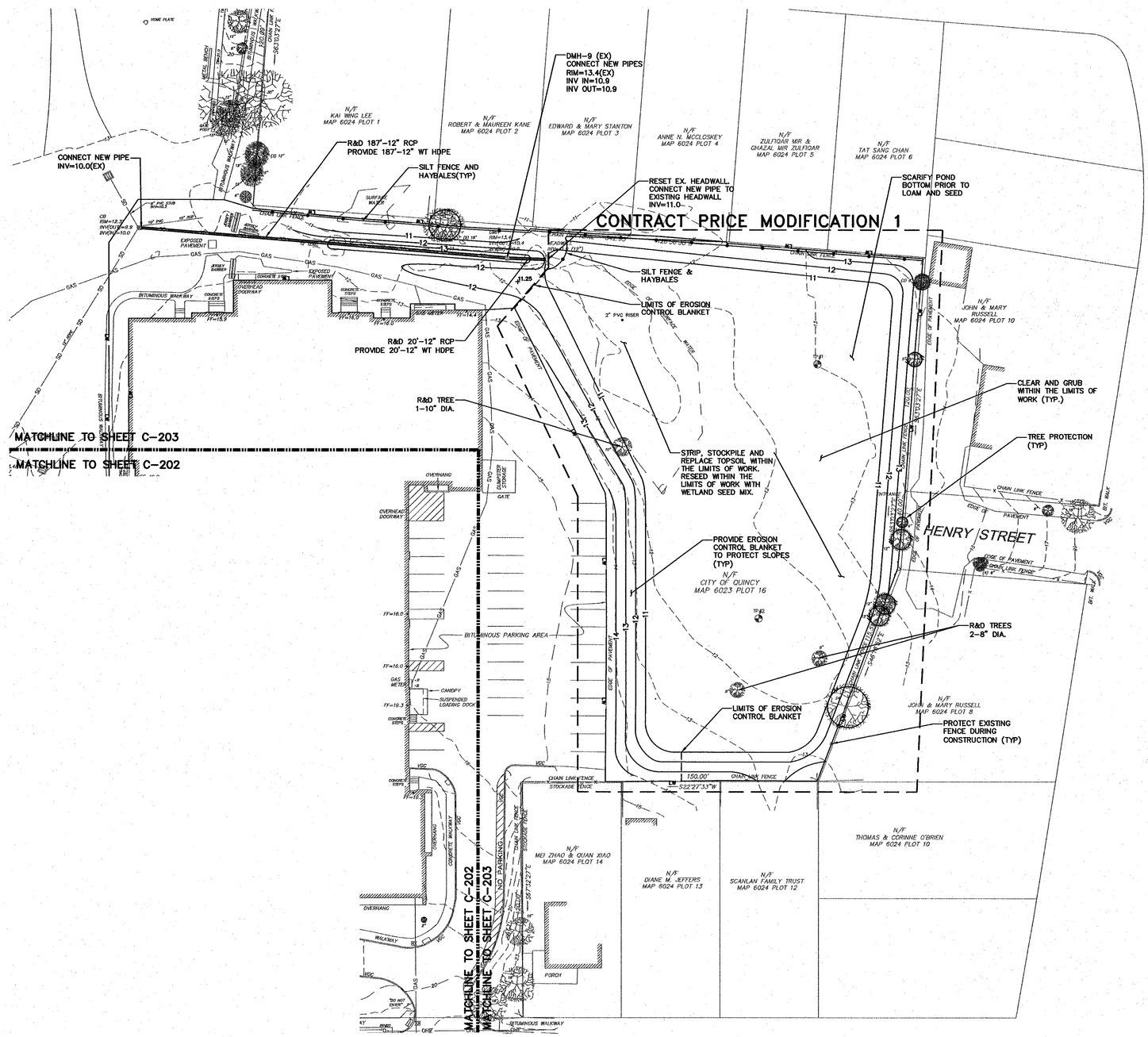

30' 0 30' 60'

BAR SCALE
1" = 30'
CHECK GRAPHIC SCALE BEFORE USING

980 Washington Street, Suite 325N
Dedham, Massachusetts 02026
800.446.5518 | www.woodardcurran.com

WOODARD & CURRAN
COMMITMENT & INTEGRITY DRIVE RESULTS

THE PROPERTY OF WOODARD & CURRAN INC. AND ITS CONT. RISK-BOCCHINI, OR USE/REPRODUCTION WITHOUT WRITTEN PERMISSION IS PROHIBITED.

COMMONWEALTH OF MASSACHUSETTS
DAVID A. WHITE
CIVIL
No. 38880
REGISTERED PROFESSIONAL ENGINEER
7/14/14

REV.	DESCRIPTION	DATE

DESIGNED BY: RJD
DRAWN BY: PMM
CHECKED BY: DAW
227591 SITE LAYOUT.dwg

GRADING AND DRAINAGE PLAN 2

CITY OF QUINCY, MASSACHUSETTS
DEPARTMENT OF PARKS AND FORESTRY
1 MERRYMOUNT PARKWAY QUINCY,MA

ATLANTIC MIDDLE SCHOOL CAMPUS
IMPROVEMENT PROJECT

JOB NO.: 227591.01
DATE: APRIL 2014
SCALE: 1"=30'
SHEET: 11 OF 17

C-203

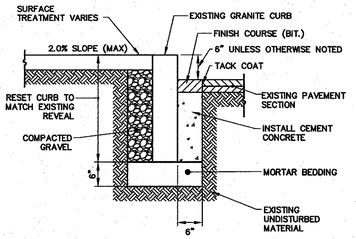

NOTE:

1. THIS PROCEDURE IS APPLICABLE ONLY IF CURB IS TO BE SET AFTER BASE AND/OR BINDER ARE IN PLACE, OR SET IN EXISTING PAVEMENT.
2. SAWCUT NEAT LINE 6" FROM CURB LINE AND REMOVE BINDER, BASE AND GRAVEL, REPLACE WITH CEMENT CONCRETE.
3. PAYMENT PER FOOT OF CURB IS INCLUSIVE OF ALL ITEMS OF WORK REQUIRED TO COMPLETE PROPER INSTALLATION OF THE CURB.

RESET EXISTING GRANITE CURB DETAIL (INSTALLATION IN EXISTING PAVEMENT)

NOT TO SCALE

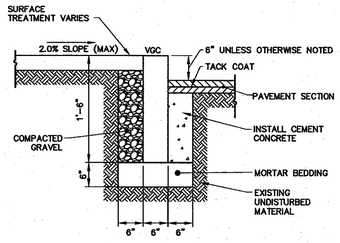

NOTE:

1. PAYMENT PER FOOT OF CURB IS INCLUSIVE OF ALL ITEMS OF WORK REQUIRED TO COMPLETE PROPER INSTALLATION OF THE CURB.

VERTICAL GRANITE CURB TYPE VA-3 (VGC)

NOT TO SCALE

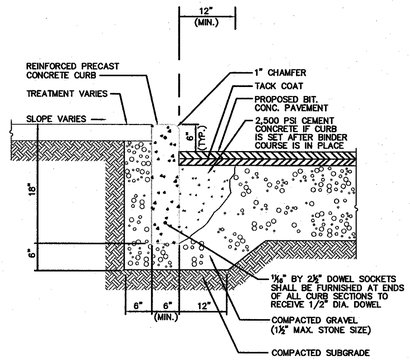

PRECAST CONCRETE CURB (PCC)

NOT TO SCALE

NOTES:

1. PROVIDE EXPANSION JOINTS AT MIN. 30 FT. O.C. WITH PRE-MOLDED JOINT FILLER.
2. PROVIDE CONTROL JOINTS AT 6' O.C.
3. PROVIDE BROOM FINISH IN DIRECTION PERPENDICULAR TO CURB.
4. CEMENT CONCRETE SHALL BE 4000 PSI-TYPE II
5. EXISTING GRAVEL SUB-BASE TO REMAIN IN AREAS WHERE NO TRENCHING IS PROPOSED.
6. SEE ROADWAY/SIDEWALK RECONSTRUCTION DETAIL FOR GRAVEL APPLICATION IN AREAS OF PROPOSED TRENCHING.

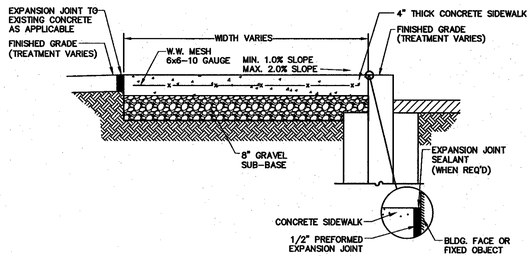

SECTION

TYPICAL CEMENT CONCRETE SIDEWALK DETAIL

NOT TO SCALE

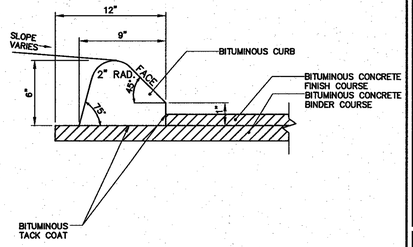

TYPE-2 BITUMINOUS CURB DETAIL

NOT TO SCALE

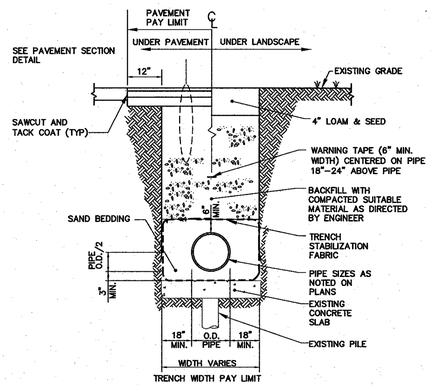

TRENCH DETAIL A (SLAB/PILE SUPPORTED)

NOT TO SCALE

NOTES:

1. MAINTAIN UNIFORM TRENCH WIDTH TO 6" OVER PIPE.
2. BRACING AND SHEETING OR OTHER TRENCH PROTECTION TO BE PROVIDED TO MEET APPLICABLE O.S.H.A. SAFETY REGULATIONS. ALL SUCH TRENCH PROTECTION TO BE RESPONSIBILITY OF CONTRACTOR. CONTRACTOR TO PROVIDE SHOP DRAWINGS OF TRENCH SUPPORT SYSTEMS ENDORSED BY A PROFESSIONAL ENGINEER LICENSED IN THE STATE OF MASSACHUSETTS.
3. CONTRACTOR SHALL OBTAIN TRENCHING PERMIT AND SATISFY ALL PERMITTING REQUIREMENTS.
4. SUITABLE MATERIAL SHALL BE WELL GRADED GRANULAR MATERIAL. A MINIMUM OF 25 PERCENT BY WEIGHT SHALL BE RETAINED ON THE NO. 40 SIEVE AND A MINIMUM OF 80 PERCENT BY WEIGHT SHALL BE RETAINED ON A NO. 200 SIEVE. IT SHALL BE FREE OF CLAY, PEAT, ORGANIC MATTER, DEBRIS AND SHALL NOT CONTAIN ANY STONES GREATER THAN 6 INCHES IN DIAMETER.
5. WRAP BEDDING IN STABILIZATION FABRIC. STABILIZATION FABRIC MAY BE OMITTED, AS DIRECTED BY ENGINEER, IN INSTANCE WHERE EXISTING SOILS AT THE TRENCH BOTTOM AND SIDEWALLS ARE SUITABLE GRANULAR MATERIAL.

a. REPRESENTS TRENCH WIDTH PAY LIMIT FOR BOTH TRENCH DETAIL A AND TRENCH DETAIL B
b. FOR ROCK EXCAVATION SUBTRACT 1'-0"

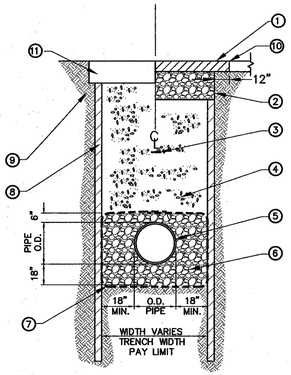

1. SEE ROADWAY/SIDEWALK RECONSTRUCTION DETAIL
2. EXCAVATION PAY LIMIT
3. WARNING TAPE CENTERED ON PIPE 18"-24" ABOVE PIPE
4. COMPACTED SUITABLE BACKFILL MATERIAL AS DIRECTED BY ENGINEER
5. PIPE SIZES AS SHOWN ON PLANS
6. 3/4" COMPACTED CRUSHED STONE
7. STABILIZATION FABRIC (SEE NOTE 5)
8. SUPPORT OF EXCAVATION (CONTRACTOR DESIGNED AS NEEDED)
9. EXISTING UNDISTURBED MATERIAL
10. SAWCUT AND TACK COAT (TYP.)/PAVEMENT PAY LIMIT
11. LOAM AND SEED, AS SPECIFIED

TRENCH WIDTHS [a]

PIPE SIZE (INCHES)	MAX. (ONE PIPE) (b)
6"	4.0'
8"	4.0'
10"	4.0'
12"	4.0'
15"	4.0'
18"	5.0'
24"	5.5'
30"	6.0'
36"	7.0'
42"	7.5'
48"	8.0'
60"	10.0'

TRENCH DETAIL B

NOT TO SCALE

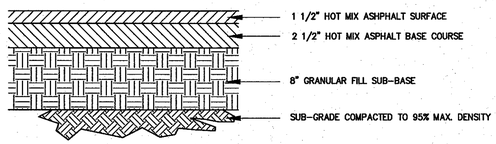

STANDARD DUTY PAVEMENT SECTION

NOT TO SCALE

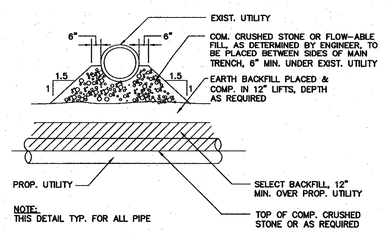

NOTE:
THIS DETAIL TYP. FOR ALL PIPE

UTILITY CROSSING DETAIL

NOT TO SCALE
SOURCE: CITY OF QUINCY

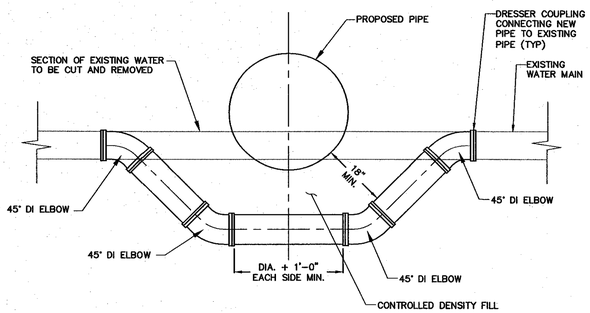

NOTE:
ALL FITTINGS SHALL BE RESTRAINED MECHANICAL JOINTS.

WATER LINE CROSSING DETAIL

NOT TO SCALE

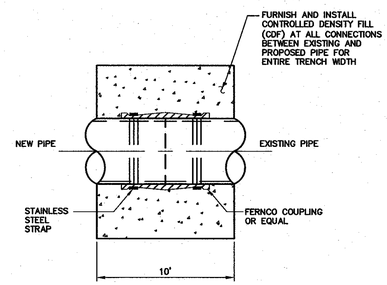

NEW PIPE TO EXISTING PIPE CONNECTION DETAIL

NOT TO SCALE

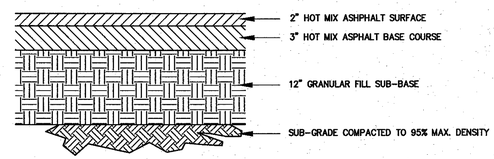

HEAVY DUTY PAVEMENT SECTION

NOT TO SCALE

900 Washington Street, Suite 325N
Dedham, Massachusetts 02026
800.446.5516 | www.woodardcurran.com
WOODARD & CURRAN
COMMITMENT & INTEGRITY DRIVE RESULTS

THIS DOCUMENT IS THE PROPERTY OF WOODARD & CURRAN INC. AND ITS CLIENT. REPRODUCTION, OR MODIFICATION WITHOUT WRITTEN PERMISSION IS PROHIBITED.

COMMONWEALTH OF MASSACHUSETTS
DAVID A. WHITE
Civil
No. 39860
REGISTERED PROFESSIONAL ENGINEER

REV	DESCRIPTION	DATE

DESIGNED BY:
DRAWN BY:
CHECKED BY:

PROJECT DETAILS 1

CITY OF QUINCY, MASSACHUSETTS
DEPARTMENT OF PARK AND FORESTRY
1 MERRYMOUNT PARKWAY QUINCY,MA

ATLANTIC MIDDLE SCHOOL CAMPUS
IMPROVEMENT PROJECT

JOB NO.: 227591.01
DATE: APRIL 2014
SCALE: NOT TO SCALE
SHEET: 12 OF 17

C-300

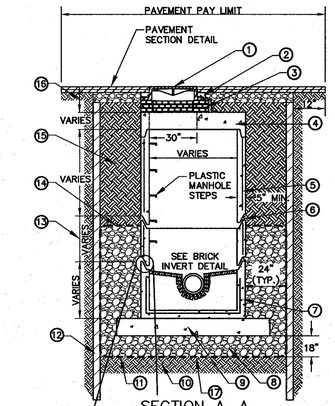

SECTION A–A

JOINT/MASTIC DETAIL

1. CAST IRON MANHOLE FRAME AND COVER WITH 30"ø CLEAR OPENING(SEE SPECIFICATION FOR TYPE)
2. FRAME TO BE SET IN A CONCRETE COLLAR
3. ADJUST TO GRADE WITH BRICK
4. TOP SLAB 8" OR ECCENTRIC CONE SECTION
5. PRECAST REINFORCED CONCRETE MANHOLE TOP SECTION
6. ALL SECTION SHALL RECIEVE BUTYL RUBBER JOINT SEALANT.
7. PRECAST CONCRETE BOTTOM SECTION WITH PIPE OPENINGS PROVIDED AS REQUIRED
8. COMPACTED 3/4" CRUSHED STONE
9. ANTI–FLOATATION SLAB
10. COMPACTED SUBGRADE OR SUITABLE BACKFILL
11. WRAP BEDDING IN STABILIZATION FABRIC. STABILIZATION FABRIC MAY BE OMITTED, AS DIRECTED BY ENGINEER, IN INSTANCE WHERE EXISTING SOILS AT THE TRENCH BOTTOM AND SIDEWALLS ARE SUITABLE GRANULAR MATERIAL.
12. SUPPORT EXCAVATION (CONTRACTOR DESIGNED)
13. PRECAST REINFORCED CONCRETE BARREL SECTION
14. COMPACTED 3/4" CRUSHED STONE TO EXTEND TO 6" ABOVE TOP OF PIPE
15. COMPACTED SUITABLE BACKFILL MATERIAL
16. EXCAVATION PAY LIMIT

PRECAST CONCRETE MANHOLE

NOT TO SCALE

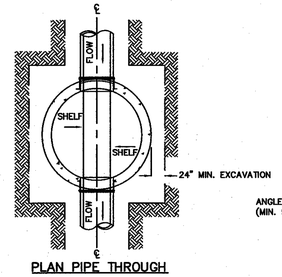

PLAN PIPE THROUGH

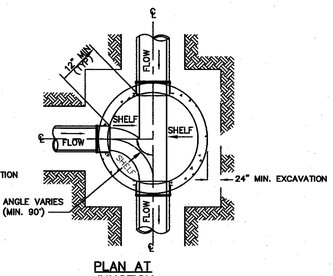

PLAN AT JUNCTION

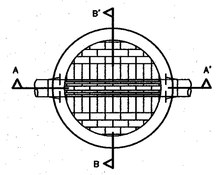

PLAN

NOTES:
1. TOOL ALL JOINTS IN CHANNEL AND ON TABLES.
2. FILL UNDER TABLE WITH MORTAR–BEDDED BRICK.
3. SLOPE CHANNEL UNIFORMLY DOWN FROM INLET TO OUTLET.
4. MAKE CHANGES IN FLOW DIRECTION BY CIRCULAR CHANNEL CONSTRUCTION WITH MAXIMUM RADIUS POSSIBLE.
5. FOR DEAD–END MANHOLES, BUILD CHANNEL AS DIRECTED BY ENGINEER.

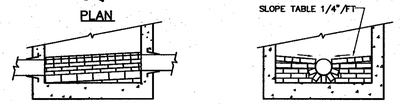

SECTION A–A' SECTION B–B'

BRICK INVERT

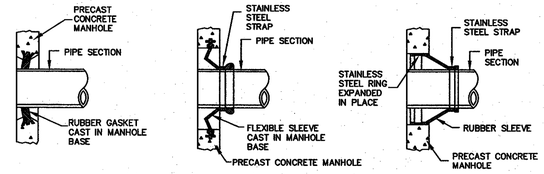

MANHOLE SEAL DETAILS

NOT TO SCALE
SOURCE: CITY OF QUINCY

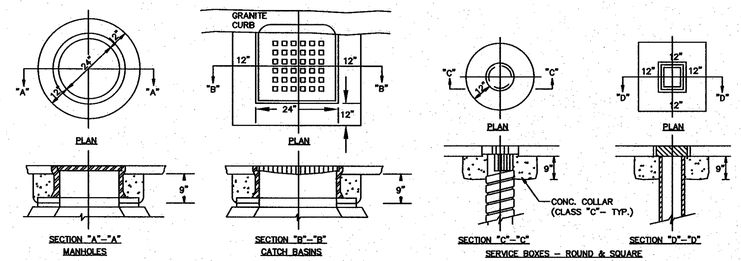

CONCRETE COLLARS

NOT TO SCALE
SOURCE: CITY OF QUINCY

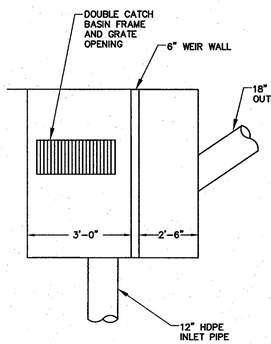

PLAN VIEW

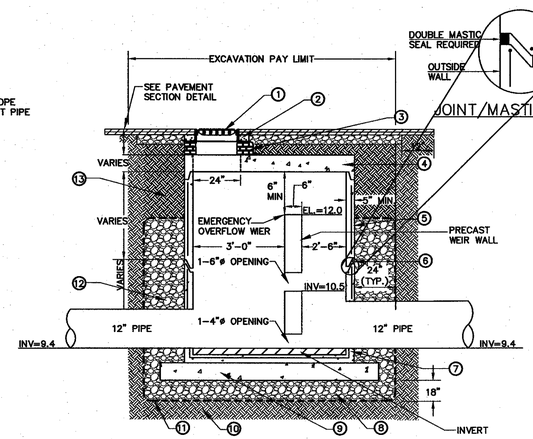

SECTION A–A

DOUBLE CATCH BASIN 6–FT SQUARE CONTROL STRUCTURE DETAIL

NOT TO SCALE

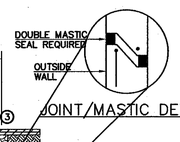

JOINT/MASTIC DETAIL

1. DOUBLE CATCH BASIN CAST IRON FRAME AND GRATE(3 FLANGE WHEN ADJACENT TO CURB)
2. FRAME TO BE SET IN A CONCRETE COLLAR
3. ADJUST TO GRADE WITH BRICK MIN 1 COURSE, MAX 3 COURSES OR CONCRETE GRADING RINGS. ALL BRICK TO BE LAID AS HEADERS
4. TOP SLAB 8" MIN.
5. PRECAST REINFORCED CONCRETE MANHOLE TOP SECTION
6. PRE–MOLDED JOINT FILLER OR BIT. MASTIC SEAL
7. PRECAST CONCRETE BOTTOM SECTION WITH PIPE OPENINGS PROVIDED AS REQUIRED
8. COMPACTED 3/4" CRUSHED STONE
9. ANTI–FLOATATION SLAB
10. COMPACTED SUBGRADE OR SUITABLE BACKFILL
11. WRAP BEDDING IN GEOTEXTILE STABILIZATION FABRIC.
12. COMPACTED 3/4" CRUSHED STONE TO EXTEND 6" ABOVE TOP OF PIPE
13. COMPACTED SUITABLE BACKFILL MATERIAL

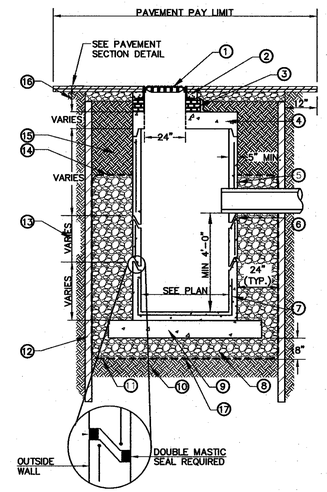

JOINT/MASTIC DETAIL

1. CAST IRON FRAME AND GRATE(3 FLANGE WHEN ADJACENT TO CURB)
2. FRAME TO BE SET IN A CONCRETE COLLAR
3. ADJUST TO GRADE WITH BRICK MIN 1 COURSE, MAX 3 COURSES OR CONCRETE GRADING RINGS. ALL BRICK TO BE LAID AS HEADERS
4. TOP SLAB 8" MIN. OR ECCENTRIC CONE SECTION
5. PRECAST REINFORCED CONCRETE MANHOLE TOP SECTION
6. PRE–MOLDED JOINT FILLER OR BIT. MASTIC SEAL
7. PRECAST CONCRETE BOTTOM SECTION WITH PIPE OPENINGS PROVIDED AS REQUIRED
8. COMPACTED 3/4" CRUSHED STONE
9. ANTI–FLOATATION SLAB
10. COMPACTED SUBGRADE OR SUITABLE BACKFILL
11. WRAP BEDDING IN STABILIZATION FABRIC. STABILIZATION FABRIC MAY BE OMITTED, AS DIRECTED BY ENGINEER, IN INSTANCE WHERE EXISTING SOILS AT THE TRENCH BOTTOM AND SIDEWALLS ARE SUITABLE GRANULAR MATERIAL.
12. SUPPORT EXCAVATION (CONTRACTOR DESIGNED)
13. PRECAST REINFORCED CONCRETE BARREL SECTION.
14. COMPACTED 3/4" CRUSHED STONE TO EXTEND 6" ABOVE TOP OF PIPE
15. COMPACTED SUITABLE BACKFILL MATERIAL
16. EXCAVATION PAY LIMIT

PRECAST CONCRETE CATCH BASIN

NOT TO SCALE

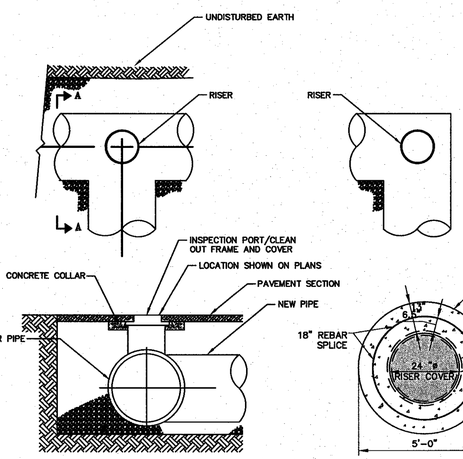

SECTION A–A RISER COLLAR PLAN VIEW

TYPICAL CLEANOUT/INSPECTION PORT DETAIL

NOT TO SCALE

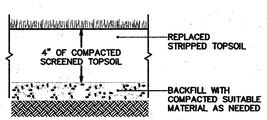

LOAM & SEED DETAIL

NOT TO SCALE

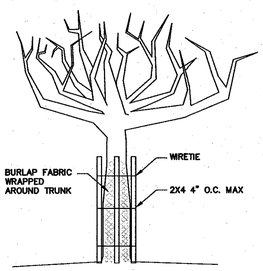

TREE PROTECTION

NOT TO SCALE

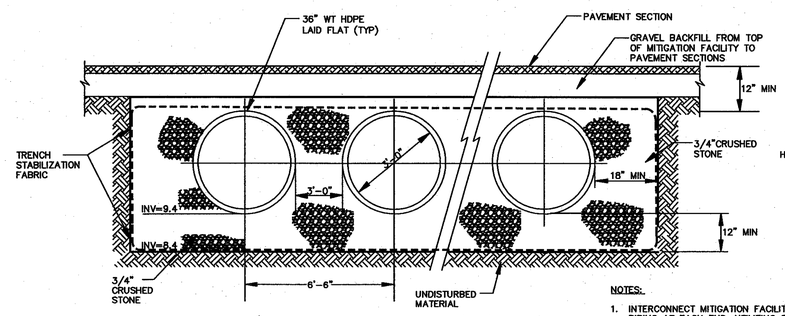

NOTES:
1. INTERCONNECT MITIGATION FACILITY PIPING AT EACH END, UTILIZING SAME DIAMETER MATERIAL PIPES AND FITTINGS.
2. CONTRACTOR TO PROVIDE SHOP DRAWING OF SYSTEM TO ENGINEER FOR APPROVAL PRIOR TO CONSTRUCTION

TYPICAL SUBSURFACE MITIGATION FACILITY CROSS SECTION

NOT TO SCALE

980 Washington Street, Suite 325N
Dedham, Massachusetts 02026
800.446.5518 | www.woodardcurran.com
WOODARD & CURRAN
COMMITMENT & INTEGRITY DRIVE RESULTS
THIS DOCUMENT, OR THE PROPERTY OF WOODARD & CURRAN INC. AND ITS CLIENT, HEREIN, CONTAINS PROPRIETARY INFORMATION WHICH MAY NOT BE REPRODUCED OR DISCLOSED WITHOUT WRITTEN PERMISSION.

COMMONWEALTH OF MASSACHUSETTS
DAVID A. SWIFT
CIVIL
No. 38860
REGISTERED PROFESSIONAL ENGINEER
7/17/14

REV	DESCRIPTION	DATE

DESIGNED BY:
DRAWN BY:
CHECKED BY:

PROJECT DETAILS 2

CITY OF QUINCY, MASSACHUSETTS
DEPARTMENT OF PARKS AND FORESTRY
1 MERRYMOUNT PARKWAY QUINCY,MA

ATLANTIC MIDDLE SCHOOL CAMPUS IMPROVEMENT PROJECT

JOB NO.: 227591.01
DATE: APRIL 2014
SCALE: NOT TO SCALE
SHEET: 13 OF 17

C-301

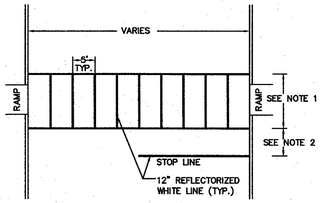

NOTE:
1. CROSSWALK SHALL BE 10' WIDE UNLESS NOTED OTHERWISE ON THE PLANS.
2. DISTANCE FROM STOP LINE SHALL BE 4' UNLESS OTHERWISE INDICATED PLANS.
3. CROSSWALK & STOPLINE PAVEMENT MARKINGS FOR USE AS TEMPORARY PAVEMENT MARKING (NONE REFLECTORIZED PAINT).
4. PERMANENT USE (THERMOPLASTIC) SHALL BE USED AS SPECIFIED UNDER MASS DOT STANDARD SPECIFICATIONS.

CROSSWALK AND STOPLINE PAVEMENT MARKING DETAIL

NOT TO SCALE
SOURCE: CITY OF QUINCY

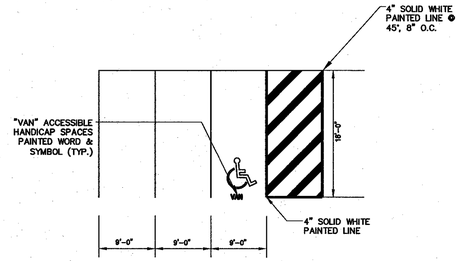

HANDICAP PARKING STALL LAYOUT DETAIL

NOT TO SCALE

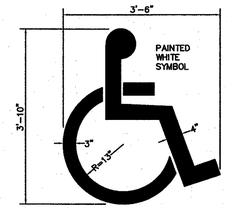

TYPICAL PAINTED HANDICAP SYMBOL DETAIL

NOT TO SCALE

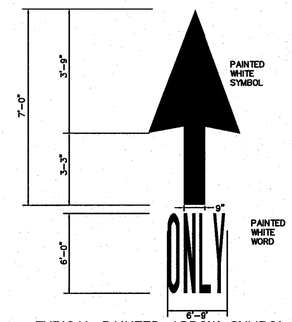

TYPICAL PAINTED ARROW SYMBOL DETAIL

NOT TO SCALE

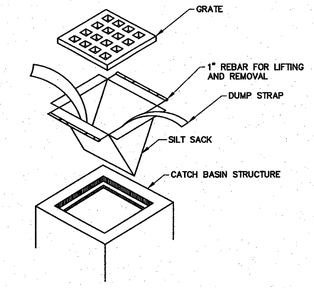

NOTE:
1. INSTALL SILTSACK PER MANUFACTURER'S INSTRUCTIONS AND RECOMMENDATIONS. EMPTY OR REMOVE SEDIMENT FROM SILTSACK WHEN RESTRAINT CORD IS NO LONGER VISIBLE. CLEAN, RINSE, AND REPLACE AS NEEDED.
2. SILT SACKS TO BE INSTALLED DURING CONSTRUCTION OPERATIONS WHEN THE POTENTIAL FOR SEDIMENT TO ENTER EXISTING & PROPOSED BASINS EXISTS.

SILT SACK INLET PROTECTION DETAIL

NOT TO SCALE

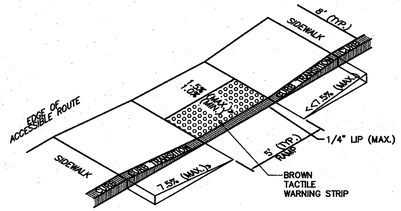

ACCESSIBLE CURB RAMP NOTES:

1. THE MAXIMUM ALLOWABLE SIDEWALK AND CURB RAMP CROSS SLOPES SHALL BE 1.5% (1% MIN.).
2. THE MAXIMUM ALLOWABLE SLOPE OF ACCESSIBLE ROUTE EXCLUDING CURB RAMPS SHALL BE 5%.
3. THE MAXIMUM ALLOWABLE SLOPE OF ACCESSIBLE ROUTE CURB RAMPS SHALL BE 7.5%.
4. A MINIMUM OF 3 FEET CLEAR SHALL BE MAINTAINED AT ANY PERMANENT OBSTACLE IN ACCESSIBLE ROUTE (I.E., HYDRANTS, UTILITY POLES, TREE WELLS, SIGNS, ETC.)
5. CURB TREATMENT VARIES, SEE PLANS FOR CURB TYPE.
6. BASE OF RAMP SHALL BE GRADED TO PREVENT PONDING.
7. SEE TYPICAL SIDEWALK SECTION FOR RAMP CONSTRUCTION.
8. WHERE ACCESSIBLE ROUTES ARE LESS THAN 5' IN WIDTH (EXCLUDING CURBING) A 5' x 5' PASSING AREA SHALL BE PROVIDED AT INTERVALS NOT TO EXCEED 200 FEET.
9. ELIMINATE ALL CURBING AT RAMP (OTHER THAN VERTICAL CURBING, WHICH SHALL BE SET FLUSH) WHERE IT ABUTS ROADWAY.
10. ALL PORTIONS OF RAMP SHALL BE CEMENT CONCRETE, SEE CONCRETE SIDEWALK DETAIL.

ACCESSIBLE CURB RAMP (ACR) – TYPE 'A'

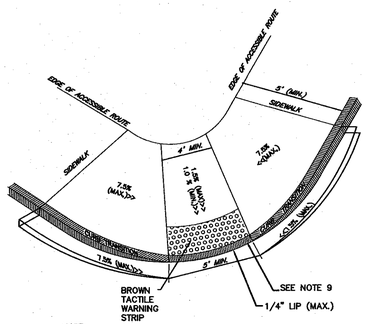

NOTE:
1. ACCESSIBLE CURB RAMP NOTES PROVIDED UNDER "ACCESSIBLE CURB RAMP – TYPE 'A' DETAIL ON THIS SHEET ARE APPLICABLE.

ACCESSIBLE CURB RAMP (ACR) – TYPE 'B'

NOT TO SCALE

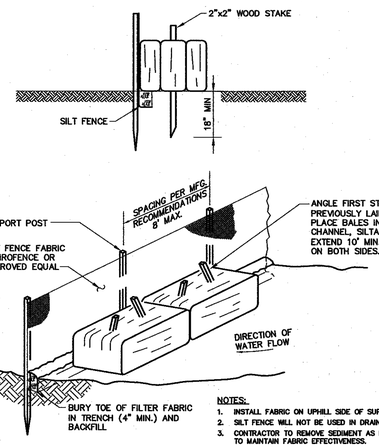

NOTES:
1. INSTALL FABRIC ON UPHILL SIDE OF SUPPORT POSTS.
2. SILT FENCE WILL NOT BE USED IN DRAINAGE WAYS.
3. CONTRACTOR TO REMOVE SEDIMENT AS NECESSARY TO MAINTAIN FABRIC EFFECTIVENESS.

TYPICAL SILTATION FENCE/HAYBALE BARRIER

NOT TO SCALE

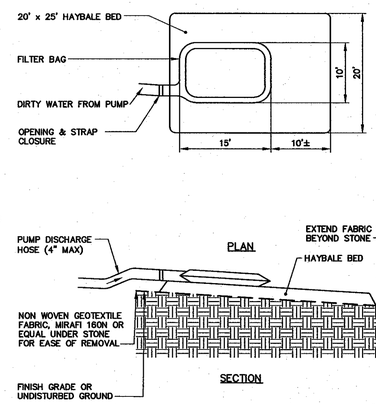

DEWATERING NOTES

1. LOCATE DISCHARGE SITE ON FLAT UPLAND AREAS AS FAR AWAY AS POSSIBLE FROM STREAMS, WETLANDS, OTHER RESOURCES AND POINTS OF CONCENTRATED FLOW.
2. DOWNGRADIENT RECEIVING AREA MUST BE WELL VEGETATED OR OTHERWISE STABLE FROM EROSION, I.E. FOREST FLOOR OR COARSE GRAVEL/STONE.
3. NEVER DISCHARGE TO AREAS THAT ARE BARE OR NEWLY VEGETATED.
4. DIRT BAG MATERIAL BASED ON PARTICLE SIZE IN DIRTY WATER, I.E., FOR COARSE PARTICLES A WOVEN MATERIAL; FOR SILTS/CLAYS A NON–WOVEN MATERIAL.
5. DO NOT OVER PRESSURIZE DIRT BAG OR USE BEYOND CAPACITY.
6. CHANNELS DUG FOR DISCHARGING WATER FROM THE EXCAVATED AREA NEED TO BE STABLE. IF FLOW VELOCITIES CAUSE EROSION WITHIN THE CHANNEL THEN A DITCH LINING SHOULD BE USED.
7. BUCKETED WATER SHOULD BE DISCHARGED IN A STABLE MANNER TO THE SEDIMENT REMOVAL AREA. A SPLASH PAD OF RIPRAP UNDERLAIN WITH GEOTEXTILE MAY BE NECESSARY TO PREVENT SCOURING OF SOIL.
8. DEWATERING IN PERIODS OF INTENSE, HEAVY RAIN, WHEN THE INFILTRATIVE CAPACITY OF THE SOIL IS EXCEEDED, SHOULD BE AVOIDED.
9. INSTALL DIVERSION DITCHES OR BERMS TO MINIMIZE THE AMOUNT OF CLEAN STORMWATER RUNOFF ALLOWED INTO THE EXCAVATED AREA.
10. DURING THE ACTIVE DEWATERING PROCESS, INSPECTION OF THE DEWATERING FACILITY SHOULD BE REVIEWED FREQUENTLY. SPECIAL ATTENTION SHOULD BE PAID TO THE BUFFER AREA FOR ANY SIGN OF EROSION AND CONCENTRATION OF FLOW THAT MAY COMPROMISE THE BUFFER AREA. OBSERVE WHERE POSSIBLE THE VISUAL QUALITY OF THE EFFLUENT AND DETERMINE IF ADDITIONAL TREATMENT CAN BE PROVIDED.
11. EROSION CONTROL REQUIRED AROUND DEWATERING DISCHARGE SEDIMENT CONTROL DEVICE.

DEWATERING DISCHARGE SEDIMENT CONTROL DEVICE

NOT TO SCALE

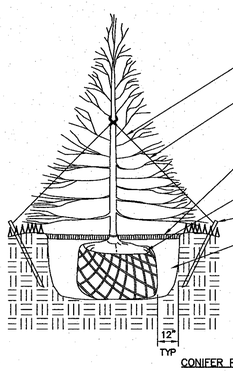

NOTES:
1. TREE SHALL BEAR SAME RELATIONSHIP TO PROPOSED GRADE AS TO GRADE FROM WHICH IT WAS DUG.
2. ALL MATERIAL TO BE GUARANTEED.

CONIFER PLANTING

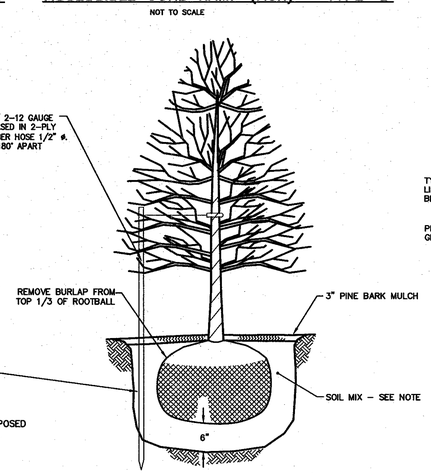

DECIDUOUS PLANTING

PLANTING DETAIL

NOT TO SCALE

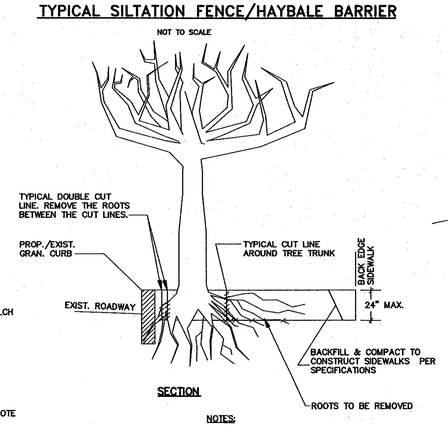

SECTION

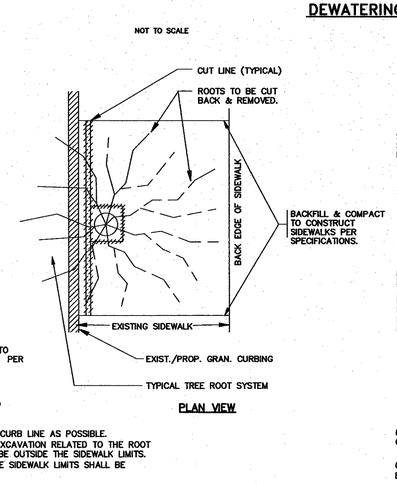

PLAN VIEW

NOTES:
1. LOCATE THE CUT LINES AS CLOSE TO THE CURB LINE AS POSSIBLE.
2. UNLESS DIRECTED BY THE ENGINEER, ALL EXCAVATION RELATED TO THE ROOT SYSTEM AND STUMP REMOVAL SHALL NOT BE OUTSIDE THE SIDEWALK LIMITS.
3. ALL ROOTS WITHIN 24 INCH DEPTH AND THE SIDEWALK LIMITS SHALL BE REMOVED.

TREE ROOT REMOVAL DETAIL

NOT TO SCALE
SOURCE: CITY OF QUINCY

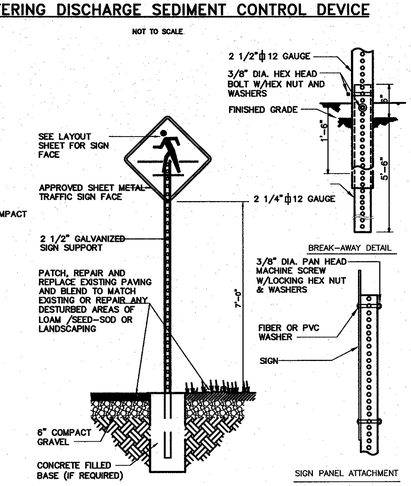

TRAFFIC SIGN POST

NOT TO SCALE

980 Washington Street, Suite 325N
Dedham, Massachusetts 02026
800.446.5516 | www.woodardcurran.com
COMMITMENT & INTEGRITY DRIVE RESULTS
WOODARD & CURRAN

THIS DOCUMENT IS THE PROPERTY OF WOODARD & CURRAN INC. AND ITS CLIENT. REPRODUCTION OR MODIFICATION WITHOUT WRITTEN PERMISSION IS PROHIBITED.

COMMONWEALTH OF MASSACHUSETTS
DAVID A. WHITE
CIVIL
No. 38860
PROFESSIONAL ENGINEER
4/18/14

REV	DESCRIPTION	DATE

DESIGNED BY:
DRAWN BY:
CHECKED BY:

PROJECT DETAILS 3

CITY OF QUINCY, MASSACHUSETTS
DEPARTMENT OF PARK AND FORESTRY
1 MERRYMOUNT PARKWAY QUINCY,MA

ATLANTIC MIDDLE SCHOOL CAMPUS
IMPROVEMENT PROJECT

JOB NO.: 227591.01
DATE: APRIL 2014
SCALE: NOT TO SCALE
SHEET: 14 OF 17

C-302

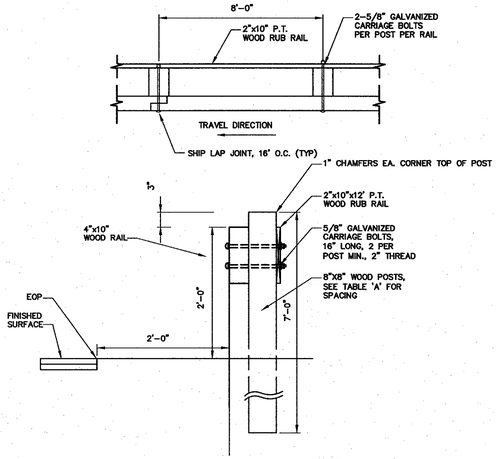

NOTE: TYPE 2 GUARDRAIL TO BE INSTALLED ADJACENT TO SIDEWALK.

TIMBER GUARDRAIL DETAIL

NOT TO SCALE

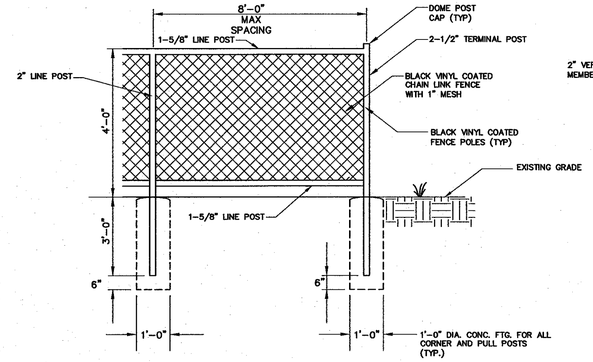

NOTES:

1. PROVIDE BLACK VINYL COATED MEMBERS AND HARDWARE TO MATCH MESH FABRIC, EXCEPT WHERE INDICATED

48" CHAIN LINK FENCE DETAIL

NOT TO SCALE

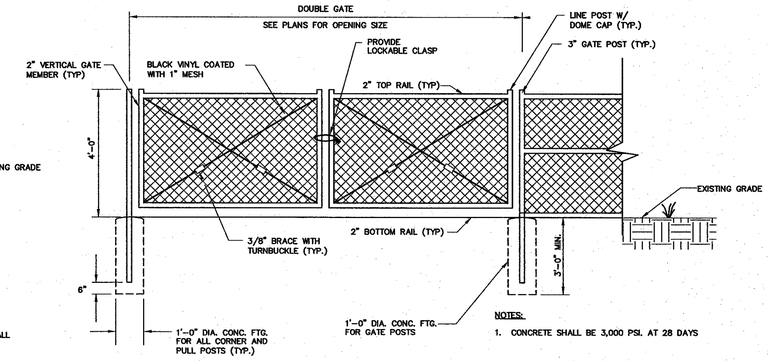

NOTES:

1. CONCRETE SHALL BE 3,000 PSI. AT 28 DAYS

48" CHAIN LINK SWING GATE FENCE DETAIL

NOT TO SCALE

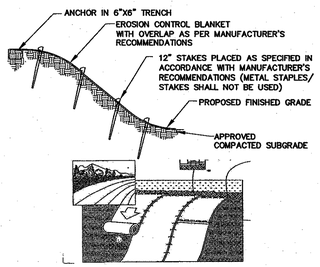

NOTES:

1. ALL EROSION CONTROL BLANKETS SHALL BE INSTALLED WITH 12" DEEP CHECK SLOTS EVERY 25 FEET OR AT THE MIDPOINT IF BLANKET LENGTH IS LESS THAN 50.
2. INSTALL EROSION CONTROL BLANKETS IN ALL AREAS WHERE SLOPE IS 3:1 OR GREATER, AFTER SEEDING. CONTRACTOR SHALL BE RESPONSIBLE FOR MAINTAINING EROSION CONTROL BLANKET UNTIL SEEDED AREA IS FULLY ESTABLISHED.

EROSION CONTROL BLANKET

NOT TO SCALE

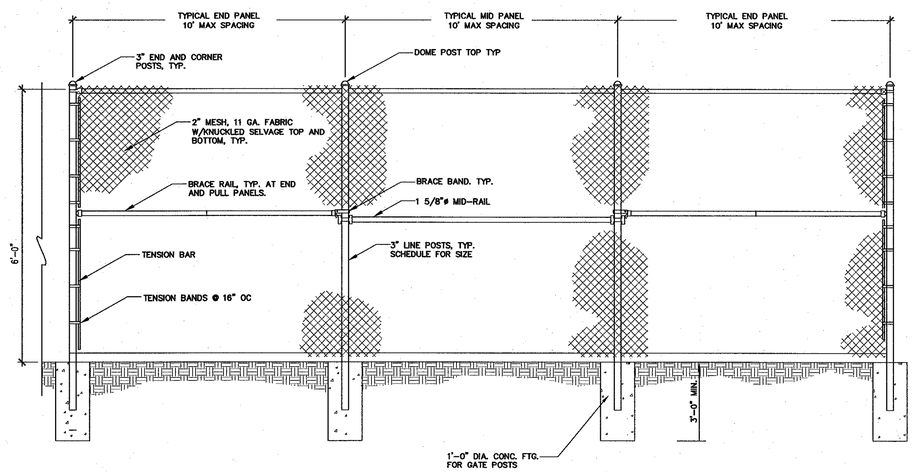

72" CHAIN LINK FENCE DETAIL

NOT TO SCALE

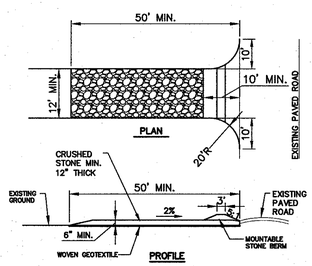

NOTES:

- STONE SIZE: ASTM C-33, SIZE NO. 2 (1 ½" TO 2½")
- INSTALLATION SHALL OCCUR AT THE INITIATION OF CONSTRUCTION ACTIVITIES.
- CROSSING EXISTING CURBS: PROVIDE CRUSHED STONE, CRUSHED CONCRETE, OR LUMBER RAMP. SOIL RAMPS ARE NOT ACCEPTABLE.
- WHEEL WASH PITS MAY ALSO BE USED, IF APPROVED.
- WHEN WASHING IS REQUIRED, IT SHALL BE DONE ON AN AREA STABILIZED WITH CRUSHED STONE THAT DRAINS INTO AN APPROVED SEDIMENT TRAP OR SEDIMENT BASIN
- A STABILIZED CONSTRUCTION ENTRANCE MUST BE PROVIDED AT EACH POINT OF INGRESS AND EGRESS ONTO ADJACENT PAVED ROADS OR PAVED AREAS WITHIN THE PROJECT.

MAINTENANCE: INSPECT FOR EFFECTIVE REMOVAL OF SOIL FROM VEHICLES PRIOR TO LEAVING THE SITE. SWEEP ANY SOIL FROM ADJACENT ROADWAYS.

REMOVAL: AT LEAST ONE CONSTRUCTION ENTRANCE SHALL BE MAINTAINED UNTIL ALL AREAS OF THE SITE ARE STABILIZED.

CONSTRUCTION ENTRANCE

N.T.S.

980 Washington Street, Suite 325N
Dedham, Massachusetts 02026
800.446.5518 | www.woodardcurran.com

COMMITMENT & INTEGRITY DRIVE RESULTS

WOODARD & CURRAN

THIS DOCUMENT IS THE PROPERTY OF WOODARD & CURRAN INC. AND IT IS CONFIDENTIAL. THIS DOCUMENT OR INFORMATION CONTAINED HEREIN MAY NOT BE REPRODUCED OR USED FOR ANY OTHER PURPOSE WITHOUT WRITTEN PERMISSION.

COMMONWEALTH OF MASSACHUSETTS
DAVID A. WHITE
CIVIL
No. 35860
REGISTERED PROFESSIONAL ENGINEER

REV	DESCRIPTION	DATE

DESIGNED BY:
DRAWN BY:
CHECKED BY:

PROJECT DETAILS 3

CITY OF QUINCY, MASSACHUSETTS
DEPARTMENT OF PARK AND FORESTRY
1 MERRYMOUNT PARKWAY QUINCY,MA

ATLANTIC MIDDLE SCHOOL CAMPUS IMPROVEMENT PROJECT

JOB NO.: 227591.01
DATE: APRIL 2014
SCALE: NOT TO SCALE
SHEET: 15 OF 17

C-303

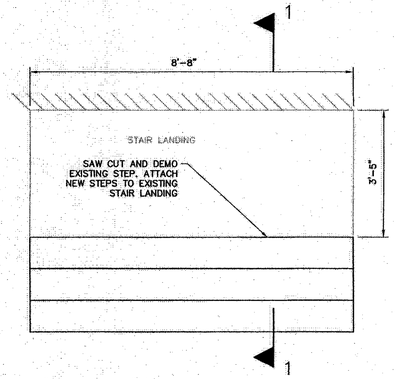

PLAN VIEW

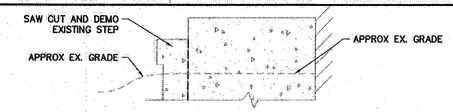

EXISTING SECTION 1–1

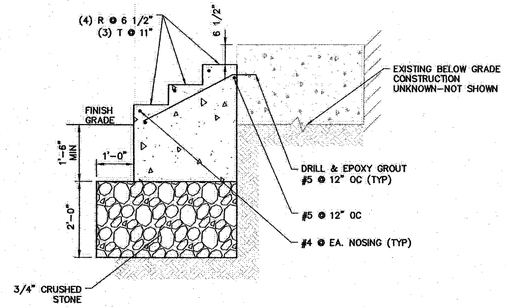

PROP. SECTION 1–1

STAIR # 1 REPAIR DETAIL

SCALE: 1/2"=1'-0"

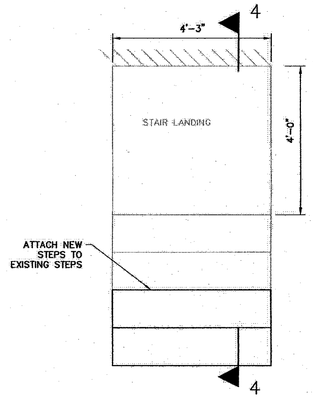

PLAN VIEW

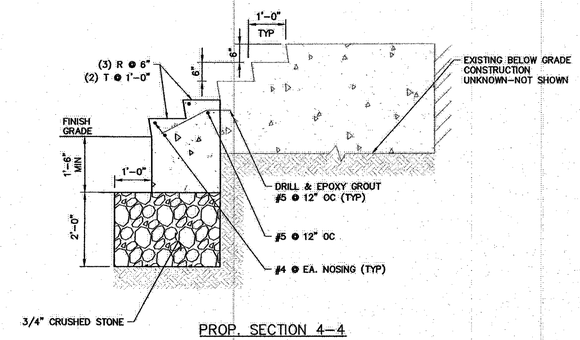

PROP. SECTION 4–4

STAIR # 4 REPAIR DETAIL

SCALE: 1/2"=1'-0"

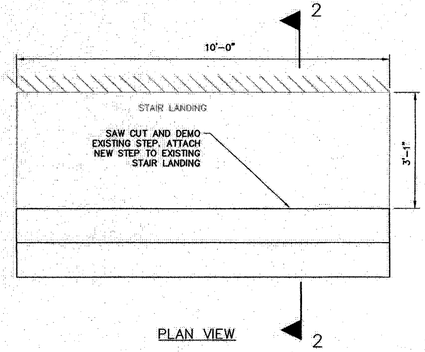

PLAN VIEW

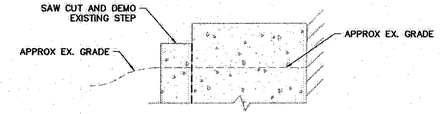

EXISTING SECTION 2–2

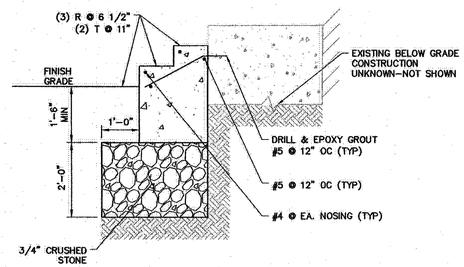

PROP. SECTION 2–2

STAIR # 2 REPAIR DETAIL

SCALE: 1/2"=1'-0"

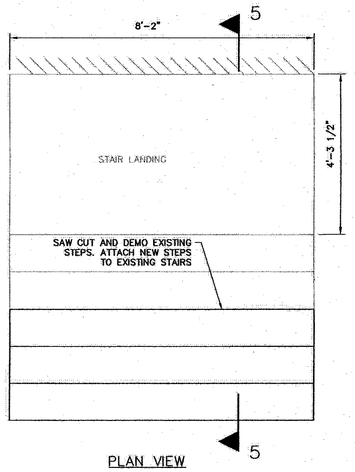

PLAN VIEW

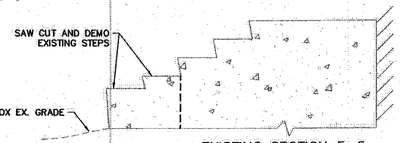

EXISTING SECTION 5–5

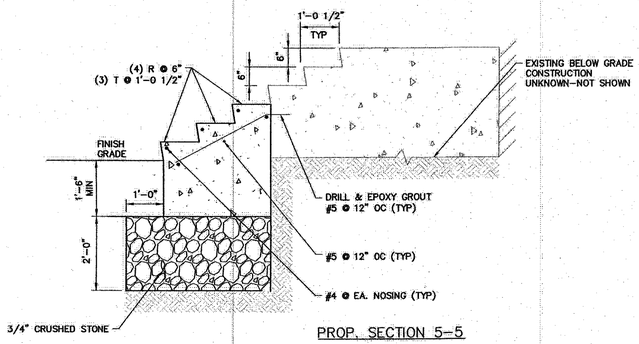

PROP. SECTION 5–5

STAIR # 5 REPAIR DETAIL

SCALE: 1/2"=1'-0"

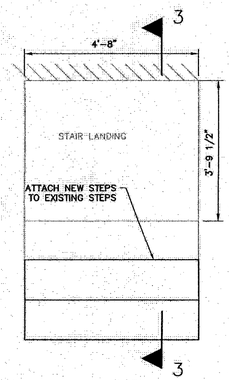

PLAN VIEW

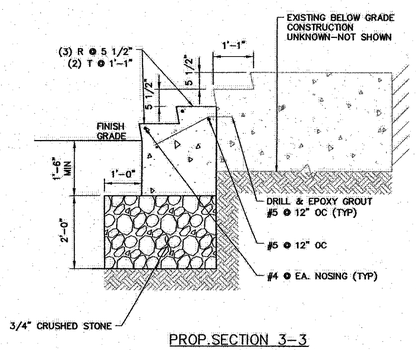

PROP.SECTION 3–3

STAIR # 3 REPAIR DETAIL

SCALE: 1/2"=1'-0"

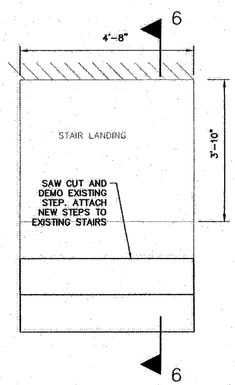

PLAN VIEW

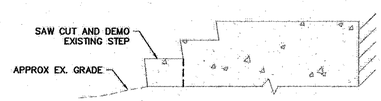

EXISTING SECTION 6–6

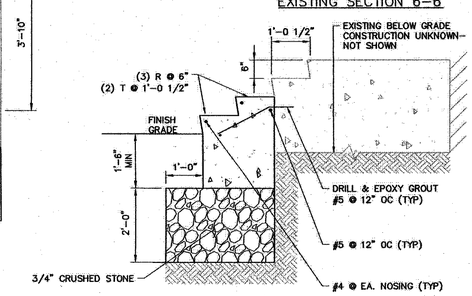

SECTION 6–6

STAIR # 6 REPAIR DETAIL

SCALE: 1/2"=1'-0"

NOTES:

1. THERE ARE EXISTING RAILINGS AT STAIRS 3, 4, 5 AND 6 THAT ARE NOT SHOWN AND THAT ARE TO BE DEMOLISHED AND PROPERLY DISPOSED OF. WHERE POSTS ARE EMBEDDED IN EXISTING CONCRETE REMOVE IN ENTIRETY, REMOVING GROUT AS NECESSARY. PATCH REMAINING HOLES WITH NON–SHRINK GROUT AND PROVIDE FLUSH WALKING SURFACE.
2. NEW GUARD AND HANDRAILS ARE REQUIRED AT STAIRS 1, 2, 3, 4, 5 AND 6, AND ARE NOT SHOWN – SEE SHEET S–02 FOR DETAILS.
3. THE CONFIGURATION AND DIMENSIONS AT EACH STAIR INCLUDING NUMBER OF TREADS, TREAD LENGTH, RISER HEIGHT, AND LANDING DIMENSIONS VARY. VERIFY IN FIELD PRIOR TO WORK.
4. THE TREAD AND RISER DIMENSION AT EACH STAIR IS TO BE CONSTANT. REGRADE AS REQUIRED TO MEET BOTTOM OF BOTTOM RISER FOR CORRECT DIMENSIONING. SLOPE GRADE AWAY FROM STAIRS.
5. DO NOT DAMAGE EXISTING CONCRETE THAT IS TO REMAIN. WHERE NEW CONCRETE IS PLACED AGAINST EXISTING CONCRETE PREPARE SURFACE AS FOLLOWS.
6. CLEAN EXISTING CONCRETE SURFACE OF ALL CONTAMINATION AND DEBRIS, AND ROUGHEN BY WATER–JETTING. SATURATE THE SURFACE AND REMOVE EXCESS WATER IMMEDIATELY PRIOR TO CONCRETE PLACEMENT. APPLY BONDING COMPOUND TO PREPARED SURFACE IN STRICT ACCORDANCE WITH THE MANUFACTURER'S INSTRUCTIONS PRIOR TO CONCRETE PLACEMENT.
7. EPOXY ADHESIVE FOR ANCHORING REINFORCEMENT SHALL BE A TWO–COMPONENT SOLID EPOXY BASED SYSTEM SUPPLIED IN MANUFACTURER'S STANDARD SIDE–BY–SIDE CARTRIDGES AND DISPENSED THROUGH MANUFACTURER'S STANDARD MIXING NOZZLE. EPOXY ADHESIVE SHALL BE EPOXY TIE SET OR ET BY SIMPSON STRONG TIE CO., INC., HIT RE–500 BY HILTI, INC., OR APPROVED EQUAL. THE EMBEDMENT DEPTH SHALL BE PER THE MANUFACTURER'S REQUIREMENTS AND SUCH THAT: THE ULTIMATE STRENGTH EXCEEDS THE TENSILE STRENGTH OF THE BAR, AND THE ULTIMATE STRENGTH DIVIDED BY A MINIMUM SAFETY FACTOR OF 3.75 IS AT LEAST 40% OF THE YIELD STRENGTH OF THE BAR.
8. STRICT CONFOMANCE TO THE MANUFACTURER'S INSTALLATION REQUIREMENTS IS REQUIRED. HAMMER DRILLS SHALL BE USED, DIAMOND DRILL BITS ARE PROHIBITED. DISCARD INITIAL MATERIAL EXTRUDED THROUGH NOZZLE TO ENSURE PROPER MIXING. DEPTH STOPS SHALL BE USED TO ENSURE CORRECT DEPTH OF DRILLED HOLES. DRILLED HOLES SHALL BE BLOWN OUT WITH AIR, THOROUGHLY WIRE BRUSHED, AND BLOWN OUT AGAIN. ADHESIVE SHALL BE INJECTED STARTING FROM THE BOTTOM OF THE HOLE, AND SLOWLY WITHDRAWN AS FILLING PROGRESSES IN ORDER TO AVOID AIR POCKETS. ANCHORED BARS SHALL REMAIN COMPLETELY UNDISTURBED BETWEEN THE MANUFACTURER'S SPECIFIED GEL TIME AND THE FULL CURE TIME, WITH NO LOAD APPLIED.
9. PROVIDE 3/8" NOSING RADIUS AT EACH TREAD. AT EXISTING STAIRS WITH NON–VERTICAL (SLANTED) RISERS, MATCH EXISTING CONFIGURATION.
10. APPLY BROOM FINISH.
11. APPLY WATER REPELLENT, BARACADE WB 244 BY EUCLID CHEMICAL, AQUAPEL BY L&M CONSTRUCTION CHEMICALS, INC., OR APPROVED EQUAL.

WOODARD & CURRAN
980 Washington Street, Suite 325N
Dedham, Massachusetts 02026
800.446.5516 | www.woodardcurran.com
COMMITMENT & INTEGRITY DRIVE RESULTS

THIS DOCUMENT IS THE PROPERTY OF WOODARD & CURRAN INC. AND IS TO BE RETURNED ON REQUEST. REPRODUCTION OR RE-PRODUCTION WITHOUT WRITTEN PERMISSION IS PROHIBITED.

COMMONWEALTH OF MASSACHUSETTS MARK W. CANNISTRARO STRUCTURAL 40588 REGISTERED PROFESSIONAL ENGINEER

REV	DESCRIPTION	DATE

DESIGNED BY: MWC
DRAWN BY: PMM
CHECKED BY: MWC

STRUCTURAL DETAILS 1

CITY OF QUINCY, MASSACHUSETTS
DEPARTMENT OF PARK AND FORESTRY
1 MERRYMOUNT PARKWAY QUINCY,MA

ATLANTIC MIDDLE SCHOOL CAMPUS
IMPROVEMENT PROJECT

JOB NO.: 227591.01
DATE: APRIL 2014
SCALE: AS NOTED
SHEET: 16 OF 17

S-01

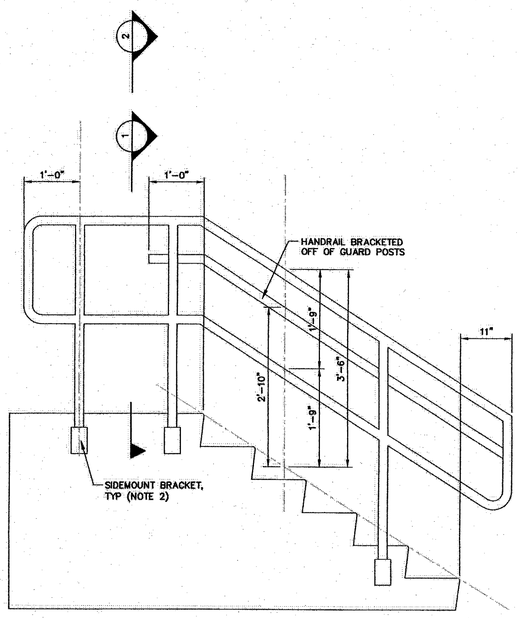

NOTES:

1. THE CONFIGURATION AND DIMENSIONS AT EACH STAIR INCLUDING NUMBER OF TREADS, TREAD LENGTH, RISER HEIGHT, AND LANDING DIMENSIONS VARY.

2. SIDE-MOUNTED POSTS REQUIRED EXCEPT PROVIDE TOP-MOUNTED POSTS AT STAIR #2 ONLY.

3. ALL RAILING COMPONENTS SHALL BE HOT DIP GALVANIZED.

4. HAND CLEAN RAILING COMPONENTS WITH ALL PURPOSE CLEANER AND THOROUGHLY RINSE WITH WATER AND ALLOW TO DRY. APPLY FIELD PRIME COAT OF SHERWIN-WILLIAMS "MACROPOXY 646" AT 3-5 MIL DFT, OR APPROVED EQUAL. FOLLOW WITH TWO FINISH COATS OF SHERWIN-WILLIAMS "HIGH SOLIDS POLYURETHANE 100", OR APPROVED EQUAL, AT 3-4 MIL DFT EACH.

TYPICAL GUARD AND HANDRAIL

SCALE: 3/4"=1'-0"

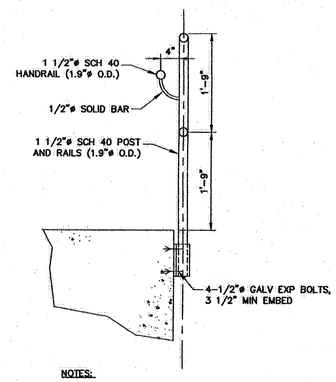

NOTES:

1. SIDE-MOUNTED POSTS REQUIRED EXCEPT AT STAIR #2 ONLY.

SECTION 1

SCALE: 3/4"=1'-0"

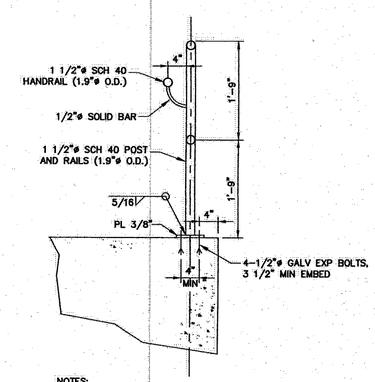

NOTES:

1. PROVIDE TOP-MOUNTED POSTS AT STAIR #2 ONLY.

SECTION 2

SCALE: 3/4"=1'-0"

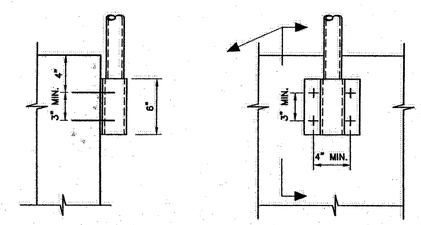

TYPICAL SIDE-MOUNT DETAIL

SCALE: 1 1/2"=1'-0"

980 Washington Street, Suite 325N
Dedham, Massachusetts 02026
800.446.5518 | www.woodardcurran.com

COMMITMENT & INTEGRITY DRIVE RESULTS

WOODARD & CURRAN

THIS DOCUMENT IS THE PROPERTY OF WOODARD & CURRAN INC. AND TO CLIENT. REPRODUCTION OR MODIFICATION WITHOUT WRITTEN PERMISSION IS PROHIBITED.

COMMONWEALTH OF MASSACHUSETTS
MARK W. CUNNINGHAM
STRUCTURAL
40356
REGISTERED PROFESSIONAL ENGINEER

REV	DESCRIPTION	DATE

DESIGNED BY: MWC
DRAWN BY: MWC
CHECKED BY: MWC

STRUCTURAL DETAILS 2

CITY OF QUINCY, MASSACHUSETTS
DEPARTMENT OF PARK AND FORESTRY
1 MERRYMOUNT PARKWAY QUINCY,MA

ATLANTIC MIDDLE SCHOOL CAMPUS
IMPROVEMENT PROJECT

JOB NO.: 227591.01
DATE: APRIL 2014
SCALE: AS NOTED
SHEET: 17 OF 17

S-02