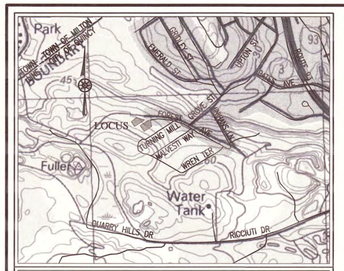

ZONING DATA

DISTRICT: RESIDENCE A

MINIMUM REQUIREMENTS:

LOT AREA	7,650 S.F.
LOT FRONTAGE	85 FT
FRONT YARD	25 FT
SIDE YARD	13 FT
REAR YARD	20 FT
MAX LOT COVERAGE	35%
REQUIRED LOT WIDTH PERPENDICULAR TO SIDELINES	85 FT
MAX BUILDING HEIGHT	2.5 STORIES

SHEET INDEX

SHEET 1	TITLE & INDEX SHEET
SHEET 2	LOTTING
SHEET 3	EXISTING CONDITIONS
SHEET 4	UTILITIES & GRADING
SHEET 5	PLAN & PROFILE
SHEET 6	DETAILS
SHEET 7	DETAILS
SHEET 8	DETAILS

QUINCY PLANNING BOARD

APPROVED CONDITIONALLY SUBJECT TO THE COMPLETION OF ALL REQUIRED GROUNDWORK AS SHOWN ON THESE PLANS AND AS SET FORTH IN THE COVENANT.

DATE APPROVED: _____

DATE SIGNED: _____

THIS APPROVAL IS SUBJECT TO A COVENANT DULY EXECUTED DATED THE ___ DAY OF _____, 2016, RUNNING WITH THE LAND TO BE DULY RECORDED BY OR FOR THE OWNER OF RECORD.

THIS PLAN IS SUBJECT TO ALL CONDITIONS OF THE QUINCY PLANNING BOARD CERTIFICATE OF ACTION DATED _____, 2016, FILED WITH THE QUINCY CITY CLERK ON _____ AND HEREWITH RECORDED AS PART OF THIS PLAN.

QUINCY CITY CLERK

I HEREBY CERTIFY THAT THERE HAS BEEN NO APPEAL TAKEN TO THIS PLANNING BOARD ACTION DURING THE TWENTY DAY STATUTORY APPEAL PERIOD.

QUINCY CITY CLERK DATE

WAIVERS:

A. SECTION 3-1 PRELIMINARY PLAN.

B. SECTION 4-2.3 PROPOSED WAY WIDTH

C. SECTION 4-2.8 TURNING CIRCLE

D. SECTION 5-1.4 ROADWAYS SHOULDERS AND CONSTRUCTION OF SIDEWALKS

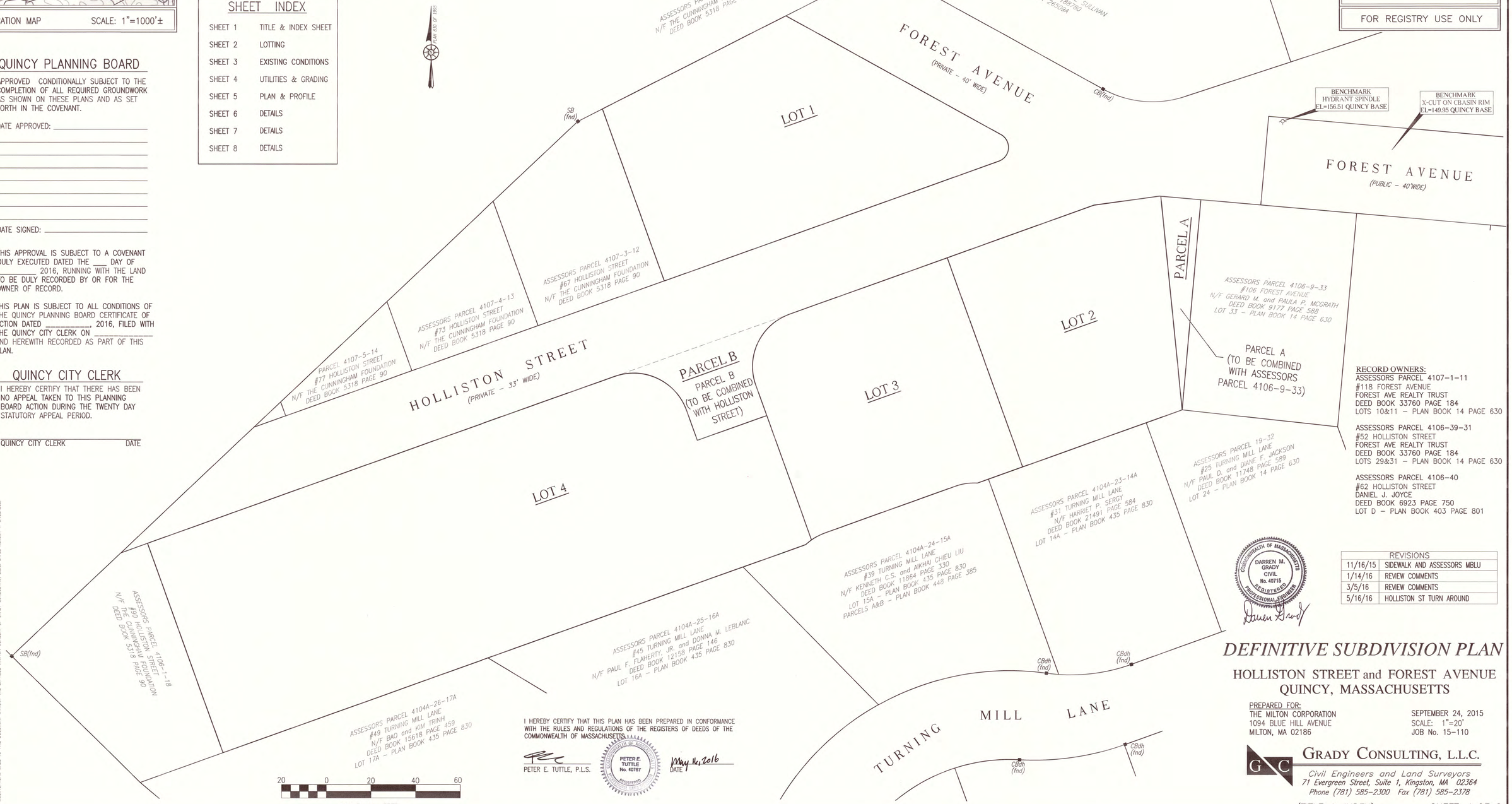

FOR REGISTRY USE ONLY

RECORD OWNERS:

ASSESSORS PARCEL 4107-1-11
#118 FOREST AVENUE
FOREST AVE REALTY TRUST
DEED BOOK 33760 PAGE 184
LOTS 10&11 - PLAN BOOK 14 PAGE 630

ASSESSORS PARCEL 4106-39-31
#52 HOLLISTON STREET
FOREST AVE REALTY TRUST
DEED BOOK 33760 PAGE 184
LOTS 29&31 - PLAN BOOK 14 PAGE 630

ASSESSORS PARCEL 4106-40
#62 HOLLISTON STREET
DANIEL J. JOYCE
DEED BOOK 6923 PAGE 750
LOT D - PLAN BOOK 403 PAGE 801

I HEREBY CERTIFY THAT THIS PLAN HAS BEEN PREPARED IN CONFORMANCE WITH THE RULES AND REGULATIONS OF THE REGISTERS OF DEEDS OF THE COMMONWEALTH OF MASSACHUSETTS.

PETER E. TUTTLE, P.L.S. — PETER E. TUTTLE No. 40767 REGISTERED — DATE May 4, 2016

COMMONWEALTH OF MASSACHUSETTS — DARREN M. GRADY CIVIL No. 40715 REGISTERED PROFESSIONAL ENGINEER

REVISIONS	
11/16/15	SIDEWALK AND ASSESSORS MBLU
1/14/16	REVIEW COMMENTS
3/5/16	REVIEW COMMENTS
5/16/16	HOLLISTON ST TURN AROUND

DEFINITIVE SUBDIVISION PLAN

HOLLISTON STREET and FOREST AVENUE
QUINCY, MASSACHUSETTS

PREPARED FOR:
THE MILTON CORPORATION
1094 BLUE HILL AVENUE
MILTON, MA 02186

SEPTEMBER 24, 2015
SCALE: 1"=20'
JOB No. 15-110

GRADY CONSULTING, L.L.C.
Civil Engineers and Land Surveyors
71 Evergreen Street, Suite 1, Kingston, MA 02364
Phone (781) 585-2300 Fax (781) 585-2378

(TITLE & INDEX) SHEET 1 OF 8

COPYRIGHT © BY GRADY CONSULTING, L.L.C.
ALL RIGHTS RESERVED. NO PART OF THIS DOCUMENT MAY BE STORED IN A RETRIEVAL SYSTEM, OR TRANSMITTED IN ANY FORM OR BY ANY MEANS, ELECTRONIC, MECHANICAL, PHOTOCOPYING, RECORDING OR OTHERWISE, WITHOUT THE EXPRESS WRITTEN CONSENT OF GRADY CONSULTING, L.L.C. WITH THE EXCEPTION OF ONE COPY MADE BY THE RECIPIENT FOR REVIEW PURPOSES ONLY. ANY UNAUTHORIZED USE, DISCLOSURE OR MODIFICATION OF THIS DOCUMENT, WITHOUT THE EXPRESS WRITTEN CONSENT OF GRADY CONSULTING, L.L.C. SHALL RENDER IT UNUSABLE. ANY AUTHORIZED REUSE OF THIS DOCUMENT WITHOUT THE EXPRESS WRITTEN CONSENT OF GRADY CONSULTING, L.L.C. SHALL RENDER IT UNUSABLE.

J:\2015\15-110\DWG\2016-04-05 Concept - Turn around - 100 ft lot.dwg 5/17/2016 3:22:28 PM

RECORD OWNERS:
ASSESSORS PARCEL 4107-1-11
#118 FOREST AVENUE
FOREST AVE REALTY TRUST
DEED BOOK 33760 PAGE 184
LOTS 10&11 – PLAN BOOK 14 PAGE 630

ASSESSORS PARCEL 4106-39-31
#52 HOLLISTON STREET
FOREST AVE REALTY TRUST
DEED BOOK 33760 PAGE 184
LOTS 29&31 – PLAN BOOK 14 PAGE 630

ASSESSORS PARCEL 4106-40
#62 HOLLISTON STREET
DANIEL J. JOYCE
DEED BOOK 6923 PAGE 750
LOT D – PLAN BOOK 403 PAGE 801

PLAN REFERENCES:
1. DEED BOOK 1032 PAGE 207
2. PLAN BOOK 14 PAGE 630
3. PLAN No. 442 OF 1953, BOOK 3161 PAGE 23
4. PLAN No. 430 OF 1986, PLAN BOOK 335
5. PLAN No. 1519 OF 1987, PLAN BOOK 362
6. PLAN No. 190 OF 1988, PLAN BOOK 365
7. PLAN No. 148 OF 1988, PLAN BOOK 364
8. PLAN No. 389 OF 1990, PLAN BOOK 392
9. PLAN No. 393 OF 1990, PLAN BOOK 392
10. PLAN No. 801 OF 1991, PLAN BOOK 403
11. PLAN No. 830 OF 1995, PLAN BOOK 435
12. PLAN No. 385 OF 1997, PLAN BOOK 448
13. PLAN No. 97 OF 2006, PLAN BOOK 554
14. LAND COURT PLAN No. 26509A

NOTES:
1. PROPERTY LINE, STREET LINE AND OWNER INFORMATION WAS COMPILED FROM RECORDS ON FILE AT THE NORFOLK COUNTY REGISTRY OF DEEDS AND THE CITY OF QUINCY ASSESSORS DEPARTMENT.
2. TOPOGRAPHY INFORMATION SHOWN ON THIS PLAN IS BASED UPON AN ON THE GROUND SURVEY PERFORMED BY GRADY CONSULTING, L.L.C. ON MAY 26–29, 2015.
3. ALL ELEVATIONS ARE BASED ON THE TOWN OF CITY OF QUINCY VERTICAL DATUM.
4. NO WETLAND RESOURCE AREAS WERE OBSERVED DURING THIS SURVEY.
5. EXISTING UTILITIES, WHERE SHOWN, HAVE BEEN COMPILED BASED ON OBSERVED ABOVE GROUND EVIDENCE ONLY AND ARE TO BE CONSIDERED APPROXIMATE. GRADY CONSULTING, L.L.C. DOES NOT GUARANTEE THE LOCATION OF THE UNDERGROUND UTILITIES SHOWN OR THAT ALL EXISTING UTILITIES AND/OR SUBSURFACE STRUCTURES ARE SHOWN.
6. BY GRAPHIC PLOTTING ONLY, THIS PROPERTY IS LOCATED IN ZONE "X" OF THE FLOOD INSURANCE RATE MAP, AS DEPICTED ON COMMUNITY PANEL No. 250245 0206E, WHICH BEARS AN EFFECTIVE DATE OF JULY 17, 2012, AND IS NOT IN A SPECIAL FLOOD HAZARD AREA.

FOR REGISTRY USE ONLY

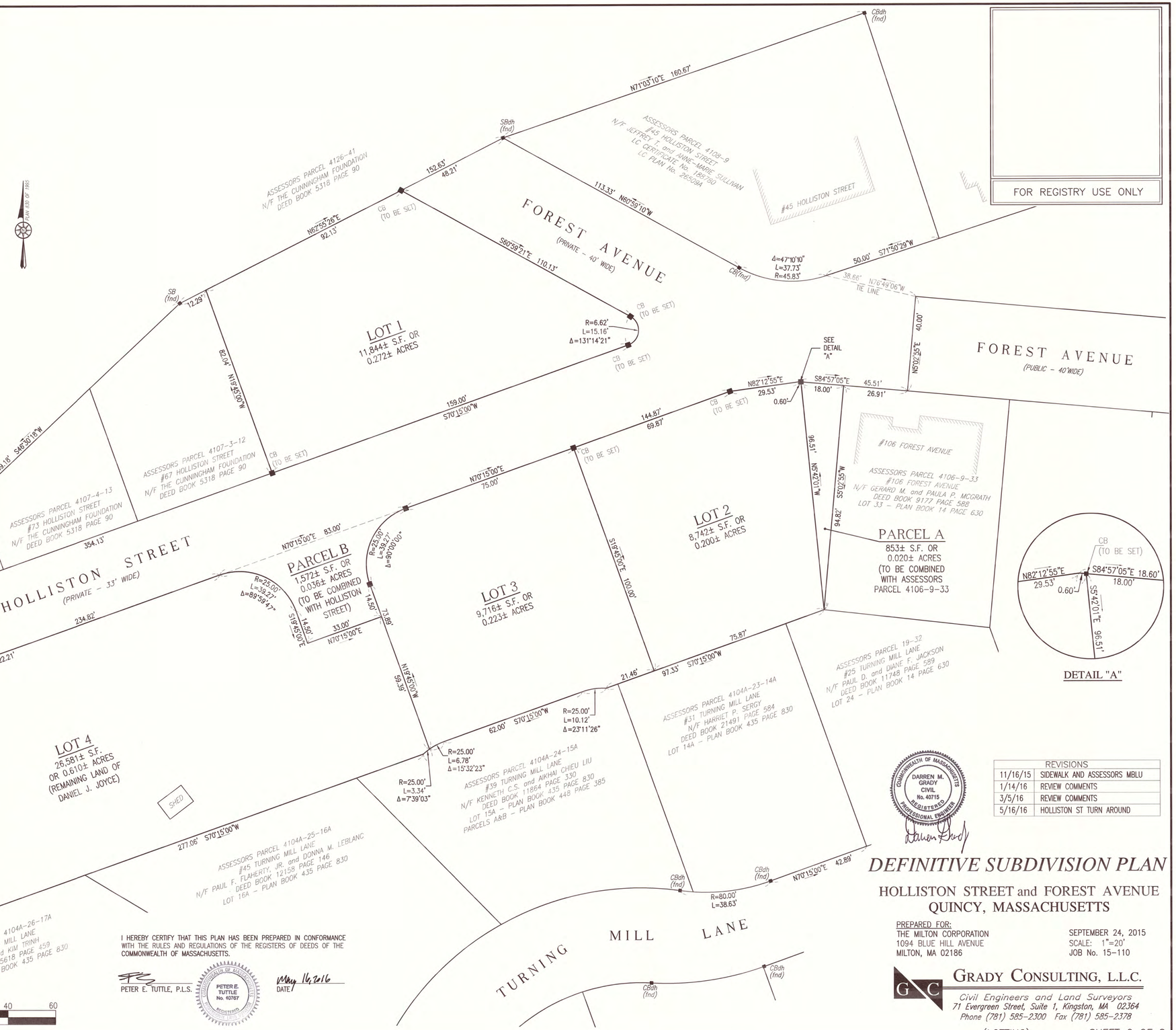

DETAIL "A"

I HEREBY CERTIFY THAT THIS PLAN HAS BEEN PREPARED IN CONFORMANCE WITH THE RULES AND REGULATIONS OF THE REGISTERS OF DEEDS OF THE COMMONWEALTH OF MASSACHUSETTS.

PETER E. TUTTLE, P.L.S. — DATE: May 16, 2016

PETER E. TUTTLE No. 40767 REGISTERED PROFESSIONAL LAND SURVEYOR

DARREN M. GRADY CIVIL No. 40715 REGISTERED PROFESSIONAL ENGINEER — COMMONWEALTH OF MASSACHUSETTS

REVISIONS	
11/16/15	SIDEWALK AND ASSESSORS MBLU
1/14/16	REVIEW COMMENTS
3/5/16	REVIEW COMMENTS
5/16/16	HOLLISTON ST TURN AROUND

DEFINITIVE SUBDIVISION PLAN

HOLLISTON STREET and FOREST AVENUE
QUINCY, MASSACHUSETTS

PREPARED FOR:
THE MILTON CORPORATION
1094 BLUE HILL AVENUE
MILTON, MA 02186

SEPTEMBER 24, 2015
SCALE: 1"=20'
JOB No. 15–110

GRADY CONSULTING, L.L.C.
Civil Engineers and Land Surveyors
71 Evergreen Street, Suite 1, Kingston, MA 02364
Phone (781) 585–2300 Fax (781) 585–2378

(LOTTING) SHEET 2 OF 8

COPYRIGHT © BY GRADY CONSULTING, L.L.C.
ALL RIGHTS RESERVED. NO PART OF THIS PLAN MAY BE REPRODUCED OR TRANSMITTED IN ANY FORM OR BY ANY MEANS, ELECTRONIC, MECHANICAL, PHOTOCOPYING, RECORDING OR OTHERWISE, WITHOUT THE EXPRESS WRITTEN CONSENT OF GRADY CONSULTING, L.L.C. WITH THE EXCEPTION OF ANY REGULATORY AUTHORITY WHICH MAY REPRODUCE IT IN CONJUNCTION WITH THE PERFORMANCE OF OFFICIAL BUSINESS UNDER ITS JURISDICTION. ANY MODIFICATIONS MADE TO THIS DOCUMENT WITHOUT THE EXPRESS WRITTEN CONSENT OF GRADY CONSULTING, L.L.C. SHALL RENDER IT VOID.

X:\2015\15-110\DWG\2016-04-05 Concept - Turn around - 100 ft lots.dwg, 5/17/2016 3:23:44 PM

RECORD OWNERS:
ASSESSORS PARCEL 4107-1-11
#118 FOREST AVENUE
FOREST AVE REALTY TRUST
DEED BOOK 33760 PAGE 184
LOTS 10&11 – PLAN BOOK 14 PAGE 630

ASSESSORS PARCEL 4106-39-31
#52 HOLLISTON STREET
FOREST AVE REALTY TRUST
DEED BOOK 33760 PAGE 184
LOTS 29&31 – PLAN BOOK 14 PAGE 630

ASSESSORS PARCEL 4106-40
#62 HOLLISTON STREET
DANIEL J. JOYCE
DEED BOOK 6923 PAGE 750
LOT D – PLAN BOOK 403 PAGE 801

PLAN REFERENCES:
1. DEED BOOK 1032 PAGE 207
2. PLAN BOOK 14 PAGE 630
3. PLAN No. 442 OF 1953, BOOK 3161 PAGE 23
4. PLAN No. 430 OF 1986, PLAN BOOK 335
5. PLAN No. 1519 OF 1987, PLAN BOOK 362
6. PLAN No. 190 OF 1988, PLAN BOOK 365
7. PLAN No. 148 OF 1988, PLAN BOOK 364
8. PLAN No. 389 OF 1990, PLAN BOOK 392
9. PLAN No. 393 OF 1990, PLAN BOOK 392
10. PLAN No. 801 OF 1991, PLAN BOOK 403
11. PLAN No. 830 OF 1995, PLAN BOOK 435
12. PLAN No. 385 OF 1997, PLAN BOOK 448
13. PLAN No. 97 OF 2006, PLAN BOOK 554
14. LAND COURT PLAN No. 26509A

NOTES:
1. PROPERTY LINE, STREET LINE AND OWNER INFORMATION WAS COMPILED FROM RECORDS ON FILE AT THE NORFOLK COUNTY REGISTRY OF DEEDS AND THE CITY OF QUINCY ASSESSORS DEPARTMENT.
2. TOPOGRAPHY INFORMATION SHOWN ON THIS PLAN IS BASED UPON AN ON THE GROUND SURVEY PERFORMED BY GRADY CONSULTING, L.L.C. ON MAY 26–29, 2015.
3. ALL ELEVATIONS ARE BASED ON THE TOWN OF CITY OF QUINCY VERTICAL DATUM.
4. NO WETLAND RESOURCE AREAS WERE OBSERVED DURING THIS SURVEY.
5. EXISTING UTILITIES, WHERE SHOWN, HAVE BEEN COMPILED BASED ON OBSERVED ABOVE GROUND EVIDENCE ONLY AND ARE TO BE CONSIDERED APPROXIMATE. GRADY CONSULTING, L.L.C. DOES NOT GUARANTEE THE LOCATION OF THE UNDERGROUND UTILITIES SHOWN OR THAT ALL EXISTING UTILITIES AND/OR SUBSURFACE STRUCTURES ARE SHOWN.
6. BY GRAPHIC PLOTTING ONLY, THIS PROPERTY IS LOCATED IN ZONE "X" OF THE FLOOD INSURANCE RATE MAP, AS DEPICTED ON COMMUNITY PANEL No. 250245 0206E, WHICH BEARS AN EFFECTIVE DATE OF JULY 17, 2012, AND IS NOT IN A SPECIAL FLOOD HAZARD AREA.

BORINGS

#	ELEVATION	DEPTH TO REFUSAL
A1	156.8	>10'
A2	161.6	>10'
A3	167.2	>10'
A4	173.4	>10'
B1	161.2	>10'
B2	168.3	>10'
B3	173.4	>10'
B4	178.8	>10'
B5	181.5	9.5'
B6	202.1	>10'
B7	208.0	9.5'
CL1	158.4	>10'
CL2	162.5	>10'
CL3	169.2	>10'
CL4	174.8	>10'
CL5	172.3	8'
CL6	192.9	8'
CL7	200.3	>10'

BORING DEPTHS PROVIDED BY MICHAEL SOLIMANDO 8/18/15

SOIL LOGS

T.H.#1
EL. 158.50

0"–10" A SANDY LOAM	157.67
10"–32" B SANDY LOAM	155.83
32"–152" C LOAMY SAND	145.83
D=12'–8" NO WATER	

T.H.#2
EL. 162.00

0"–10" A SANDY LOAM	157.67
10"–32" B SANDY LOAM	155.83
32"–180" C LOAMY SAND	147.00
D=15'–0" NO WATER	

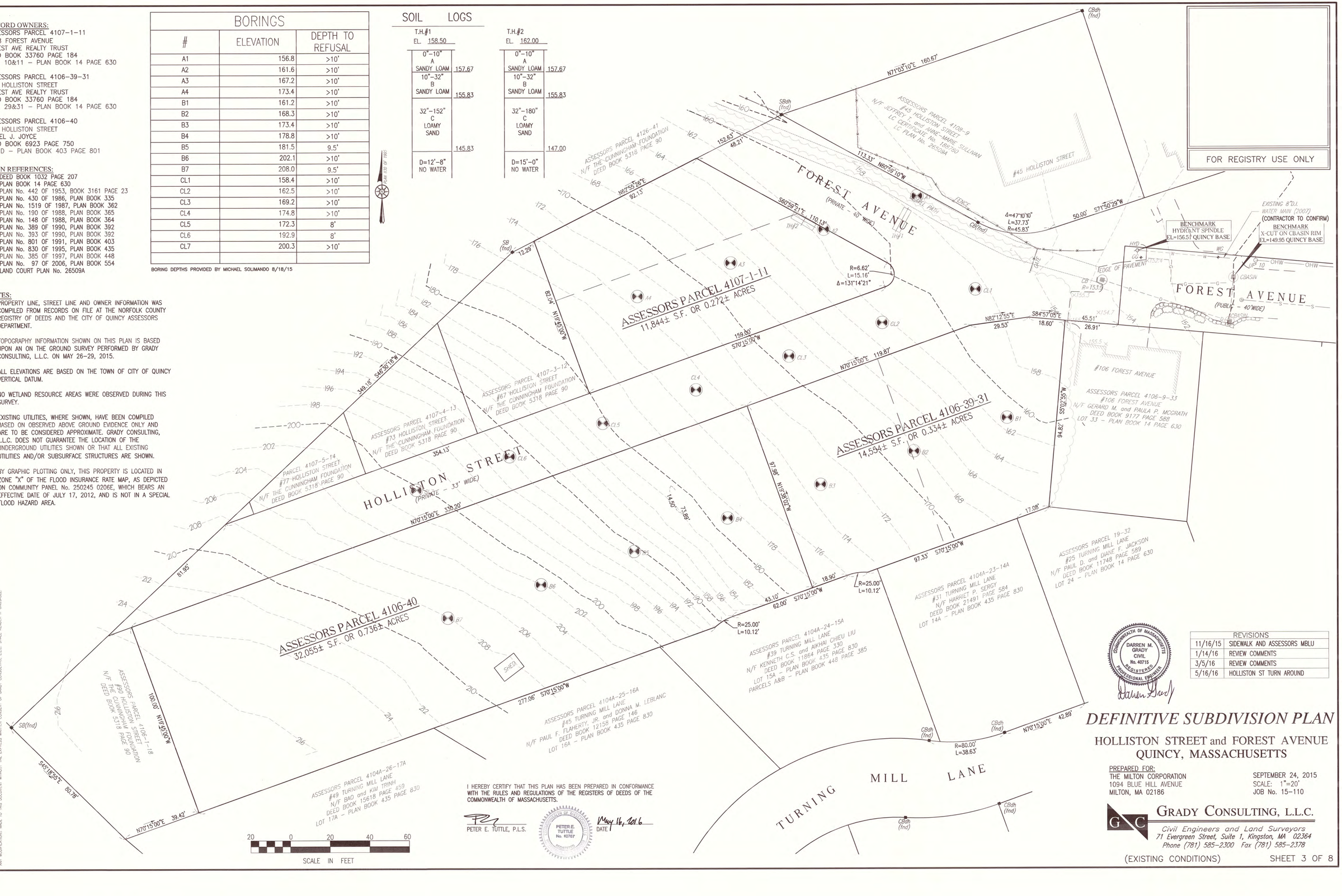

20 0 20 40 60
SCALE IN FEET

I HEREBY CERTIFY THAT THIS PLAN HAS BEEN PREPARED IN CONFORMANCE WITH THE RULES AND REGULATIONS OF THE REGISTERS OF DEEDS OF THE COMMONWEALTH OF MASSACHUSETTS.

PETER E. TUTTLE, P.L.S.

PETER E. TUTTLE No. 40767 REGISTERED

May 16, 2016
DATE

FOR REGISTRY USE ONLY

COMMONWEALTH OF MASSACHUSETTS
DARREN M. GRADY
CIVIL
No. 40715
REGISTERED
PROFESSIONAL ENGINEER

REVISIONS	
11/16/15	SIDEWALK AND ASSESSORS MBLU
1/14/16	REVIEW COMMENTS
3/5/16	REVIEW COMMENTS
5/16/16	HOLLISTON ST TURN AROUND

DEFINITIVE SUBDIVISION PLAN

HOLLISTON STREET and FOREST AVENUE
QUINCY, MASSACHUSETTS

PREPARED FOR:
THE MILTON CORPORATION
1094 BLUE HILL AVENUE
MILTON, MA 02186

SEPTEMBER 24, 2015
SCALE: 1"=20'
JOB No. 15–110

GRADY CONSULTING, L.L.C.
Civil Engineers and Land Surveyors
71 Evergreen Street, Suite 1, Kingston, MA 02364
Phone (781) 585–2300 Fax (781) 585–2378

(EXISTING CONDITIONS) SHEET 3 OF 8

COPYRIGHT © BY GRADY CONSULTING, L.L.C.
ALL RIGHTS RESERVED. NO PART OF THIS PLAN MAY BE REPRODUCED IN ANY FORM OR BY ANY MEANS, ELECTRONIC, MECHANICAL, PHOTOCOPYING, RECORDING OR OTHERWISE, WITHOUT THE EXPRESS WRITTEN CONSENT OF GRADY CONSULTING, L.L.C. WITH THE EXCEPTION OF ANY REGULATORY AUTHORITY WHICH MAY REPRODUCE IT IN CONJUNCTION WITH THE PERFORMANCE OF OFFICIAL BUSINESS UNDER ITS JURISDICTION. ANY REPRODUCTION MADE TO THIS EXTENT WITHOUT THE EXPRESS WRITTEN CONSENT OF GRADY CONSULTING, L.L.C. SHALL CONSTITUTE AN INFRINGEMENT.

J:\2015\15-110\DWGs\2016-04-05 Concept - Turn around - 100 ft lot\.dwg, 5/17/2016 3:24:39 PM

LEGEND

EXISTING		PROPOSED
	PROPERTY LINE	
62	CONTOUR	100
	EDGE OF PAVEMENT	
x x x x	FENCE	x x x x
o o o o	FENCE	o o o o
o o o o	FENCE	o o o o
W W	WATER LINE	W W
WS WS	WATER SERVICE	WS WS
E E	ELECTRIC LINE	E E
OHW OHW	ELECTRIC LINE	
G G	GAS LINE	G G
S S	SEWER LINE	S S
D D	DRAIN LINE	D D
	WETLAND LINE	
	TEST HOLE	
	HYDRANT	
	GATE VALVE	
UP	UTILITY POLE	UP
	WATER SERVICE SHUT OFF	

FOR REGISTRY USE ONLY

FOREST AVENUE (PRIVATE – 40' WIDE)

HOLLISTON STREET (PRIVATE – 33' WIDE)

LOT 1 · LOT 2 · LOT 3 · LOT 4

#45 HOLLISTON STREET · #106 FOREST AVENUE

PROPOSED 2' WIDE x 15'LONG CRUSHED STONE TRENCH TOP EL=158± BOTTOM EL=155.83 (CONNECT TO DRAIN SYSTEM 1)

PROPOSED DRAIN SYSTEM 1 67.5'x 19.4' SUBSURFACE DRAINAGE SYSTEM WITH 2 ROWS OF 15 H20 LOADING STORMTECH MC-4500 CHAMBERS WITH 2 END CAPS PER ROW

2000 GALLON H20 LOADING PRECAST CONCRETE TANK R=158.7 15"INV IN EL.= 150.61 15"INV OUT EL=150.61

L=42 FT. S=0.010 15"CL.V RCP

L=21 FT. S=0.005 12"CL.V RCP

L=22 FT. S=0.005 12"CL.V RCP

CB 1+04 11 R R=155.9 12"INV IN EL.= 151.34 12"INV IN EL.= 151.34 15"INV OUT EL=151.09

CB 0+77 11 R R=154.1 12" INV OUT EL =151.47

EXIST. CB 0+77 2 R REMOVE FRAME & GRATE RAISE & INSTALL FRAME & COVER R=154.2

PROPOSED 8"X8"X6" WYE/TEE 8"X6" REDUCER 6"GATE VALVE, 1-45° BEND WITH THRUST BLOCKS

EXISTING HYDRANT SHALL BE INSPECTED, REFURBISHED OR REPLACED (HYDRANT INSPECTION TO BE COORDINATED WITH DPW)

PROPOSED 8"WATER MAIN CONNECTION AND 8"GATE VALVE

EXISTING 8"D.I. WATER MAIN (2007)

(CONTRACTOR TO CONFIRM)

BENCHMARK HYDRANT SPINDLE EL=156.5' QUINCY BASE

BENCHMARK X-CUT ON CBASIN RIM EL=149.95 QUINCY BASE

(INSTALL SILT SACK DURING CONSTRUCTION)

SMH (SEE NOTE 1.) R=149.7 8"INV IN EL.=142.00

SAWCUT PAVEMENT

SAWCUT EXISTING PAVEMENT

PROPOSED UTILITY POLE

PROPOSED GRANITE CURB

PROPOSED OVERHEAD ELECTRIC & TELECOMMUNICATION LINES

PROPOSED UTILITY POLE

PROPOSED 8" WATER MAIN

STREET SIGN

PROPOSED SEWER SERVICE (TYP.)

PROPOSED WATER SERVICE (TYP.)

PROPOSED GAS SERVICE (TYP.)

PROPOSED HYDRANT 6" GATE VALVE & 6"x8" TEE T.W. 180.0 B.W. 179.0

PROPOSED 8" CAP & THRUST BLOCK T.W. 187.0 B.W. 184.0

PROPOSED CEMENTED STONE MASONRY RETAINING WALL OR APPROVED EQUAL T.W. 190.0

L=173 FT. S=0.010 8" SDR 35

SMH #1 R=157.9 8" INV IN EL. = 152.00 8" INV OUT EL =152.00

L=113 FT. S=0.086 8" SDR 35

CB 0+93 -11 L R=155.7 12"INV OUT EL=151.46

L=169 FT. S=0.010 6"HDPE

PROPOSED ELECTRIC SERVICE (TYP.)

PROPOSED 4' BIT. CONC. SIDEWALK

SMH #2 R=175.4 8" INV OUT EL =168.00

PROPOSED GAS MAIN

OVERFINSPECTION PORT (TYP.) OVERFLOW AND OUTLET DRAINS SEE SHEET 7 DRAIN SYSTEM 1 DETAIL.

PROPOSED TEMPORARY CRUSHED STONE CONSTRUCTION ENTRANCE

(INSTALL SILT SACK DURING CONSTRUCTION)

SHED

SCALE IN FEET: 20 0 20 40 60

NOTES:
1. THE EXISTING SEWER MANHOLE AND SEWER PIPE SHALL BE INSPECTED FOR STRUCTURAL INTEGRITY. DEFICIENCIES SHALL BE CORRECTED.

REVISIONS	
11/16/15	SIDEWALK AND ASSESSORS MBLU
1/14/16	REVIEW COMMENTS
3/5/16	REVIEW COMMENTS
5/16/16	HOLLISTON ST TURN AROUND

COMMONWEALTH OF MASSACHUSETTS
DARREN M. GRADY
CIVIL
No. 40715
REGISTERED PROFESSIONAL ENGINEER

DEFINITIVE SUBDIVISION PLAN

HOLLISTON STREET and FOREST AVENUE
QUINCY, MASSACHUSETTS

PREPARED FOR:
THE MILTON CORPORATION
1094 BLUE HILL AVENUE
MILTON, MA 02186

SEPTEMBER 24, 2015
SCALE: 1"=20'
JOB No. 15-110

GRADY CONSULTING, L.L.C.
Civil Engineers and Land Surveyors
71 Evergreen Street, Suite 1, Kingston, MA 02364
Phone (781) 585-2300 Fax (781) 585-2378

(UTILITIES & GRADING) SHEET 4 OF 8

COPYRIGHT © BY GRADY CONSULTING, L.L.C.
NO PART OF THIS DOCUMENT MAY BE REPRODUCED, STORED IN A RETRIEVAL SYSTEM, OR TRANSMITTED IN ANY FORM OF BY ANY MEANS, ELECTRONIC, MECHANICAL, PHOTOCOPYING, RECORDING OR OTHERWISE WITHOUT THE EXPRESS WRITTEN CONSENT OF GRADY CONSULTING, L.L.C. IN THE EXCEPTION THAT A REPRODUCTION MAY BE MADE BY A REGISTERED PROFESSIONAL ENGINEER OR LAND SURVEYOR FOR THE EXCLUSIVE USE OF HIS OR HER CLIENT. ANY MODIFICATIONS MADE TO THIS DOCUMENT WITHOUT THE EXPRESS WRITTEN CONSENT OF GRADY CONSULTING, L.L.C. SHALL RENDER IT UNUSABLE.

J:\2015\15-110\DWG\2016-04-05 Concept - Turn around - 100 ft lots.dwg, 5/17/2016 3:06:36 PM

HOLLISTON STREET PROFILE

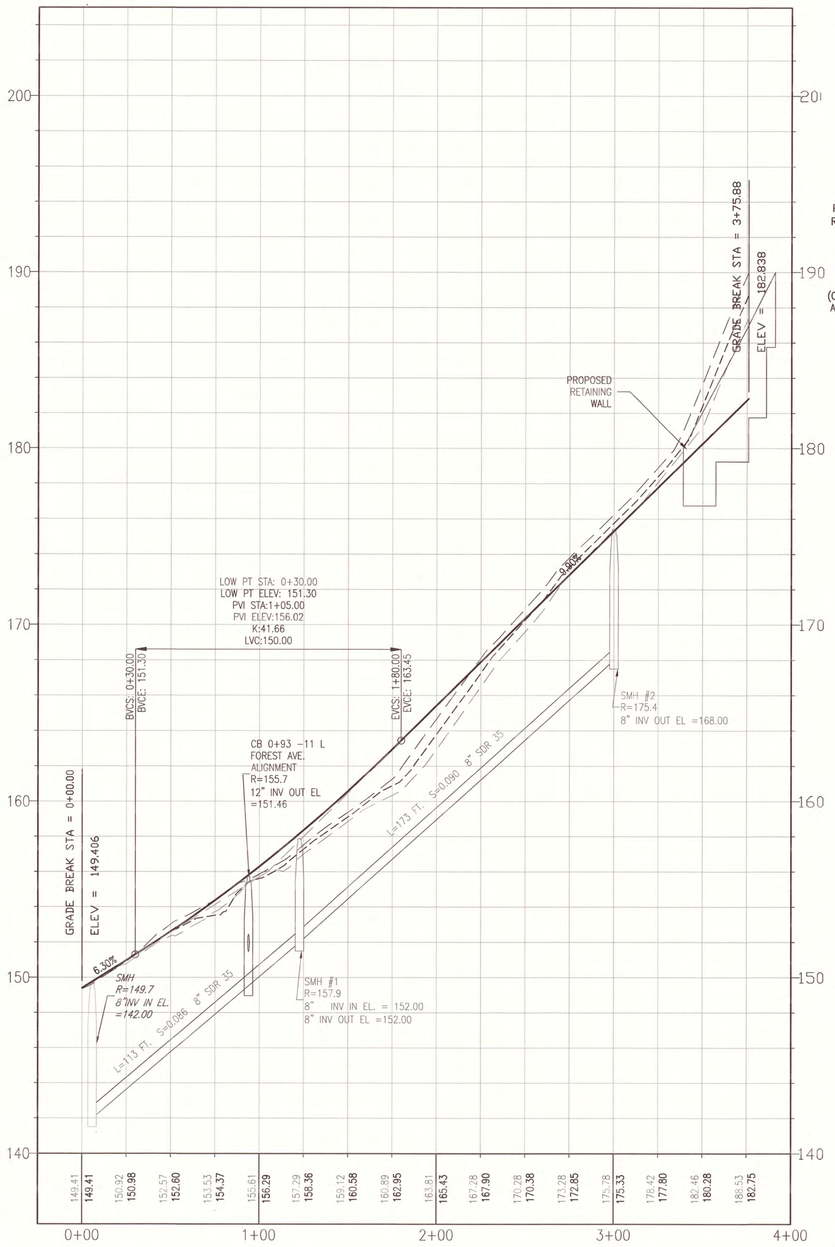

FOREST AVENUE PROFILE

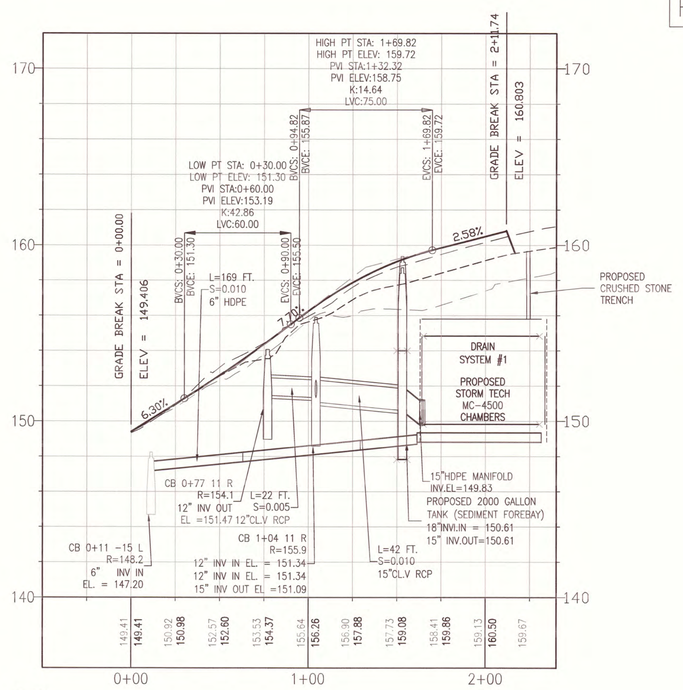

HOLLISTON STREET EXT. PROFILE

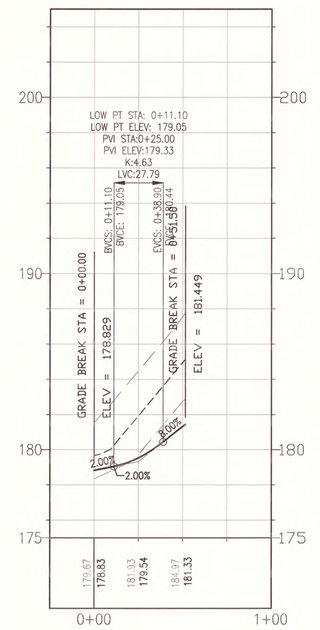

HORIZONTAL SCALE: 1"=40'

VERTICAL SCALE: 1"=4'

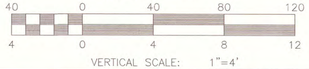

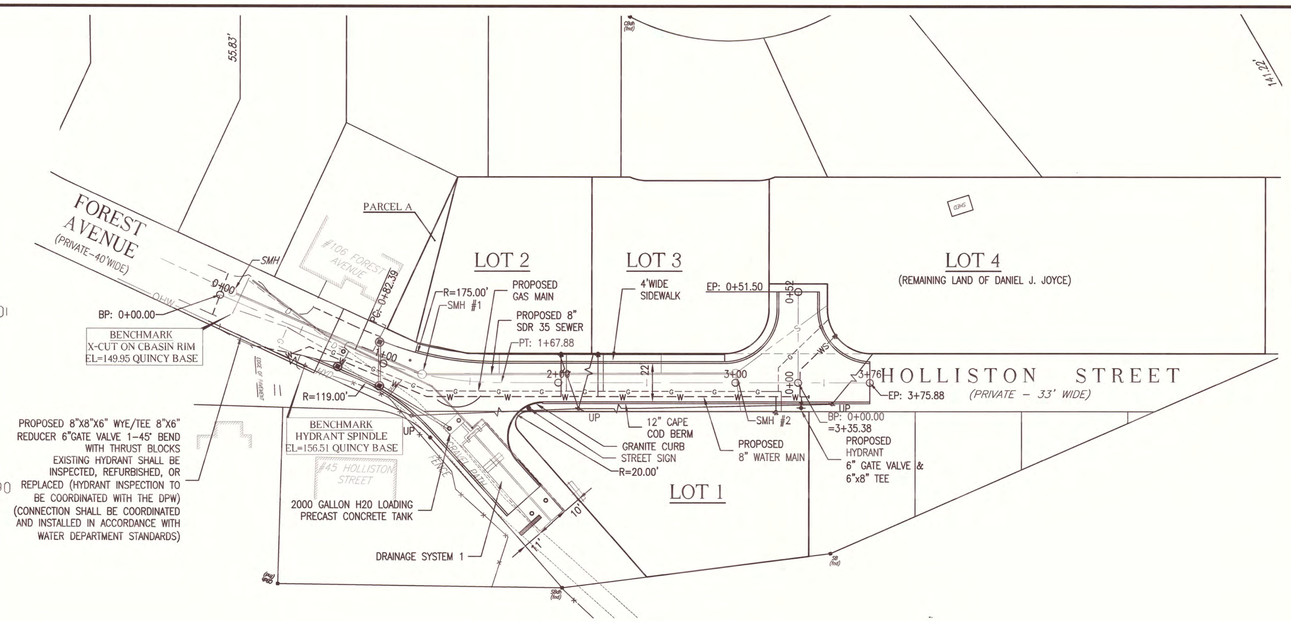

FOR REGISTRY USE ONLY

COPYRIGHT © BY GRADY CONSULTING, L.L.C.
NO PART OF THIS DOCUMENT MAY BE REPRODUCED OR TRANSMITTED IN ANY FORM OR BY ANY MEANS, ELECTRONIC, MECHANICAL, PHOTOCOPYING, RECORDING, OR OTHERWISE, WITHOUT THE EXPRESS WRITTEN CONSENT OF GRADY CONSULTING, L.L.C. WITH THE EXCEPTION OF ONE REPRODUCTION FOR THE PURPOSE OF REVIEW BY THE PLANNING BOARD AND ITS AGENTS. ANY UNAUTHORIZED USE, DISCLOSURE OR MODIFICATION BY ANY PERSON OTHER THAN THE PLANNING BOARD AND ITS AGENTS FOR THE PURPOSE OF REVIEW OF THIS PLAN, WITHOUT THE PRIOR EXPRESS WRITTEN CONSENT OF GRADY CONSULTING, L.L.C. SHALL RENDER IT UNUSABLE. ANY MODIFICATIONS MADE TO THIS DOCUMENT WITHOUT THE EXPRESS WRITTEN CONSENT OF GRADY CONSULTING, L.L.C. SHALL RENDER IT UNUSABLE.

COMMONWEALTH OF MASSACHUSETTS
DARREN M. GRADY
CIVIL
No. 40715
REGISTERED PROFESSIONAL ENGINEER

REVISIONS	
11/16/15	SIDEWALK AND ASSESSORS MBLU
1/14/16	REVIEW COMMENTS
3/5/16	REVIEW COMMENTS
5/16/16	HOLLISTON ST TURN AROUND

DEFINITIVE SUBDIVISION PLAN

HOLLISTON STREET and FOREST AVENUE
QUINCY, MASSACHUSETTS

PREPARED FOR:
THE MILTON CORPORATION
1094 BLUE HILL AVENUE
MILTON, MA 02186

SEPTEMBER 24, 2015
SCALE: 1"=20'
JOB No. 15-110

GRADY CONSULTING, L.L.C.
Civil Engineers and Land Surveyors
71 Evergreen Street, Suite 1, Kingston, MA 02364
Phone (781) 585-2300 Fax (781) 585-2378

(PLAN & PROFILE) SHEET 5 OF 8

J:\2015\15-110\DWG\2016-04-05 Concept - Turn around - 100 ft lot\dwg, 5/17/2016 3:27:17 PM

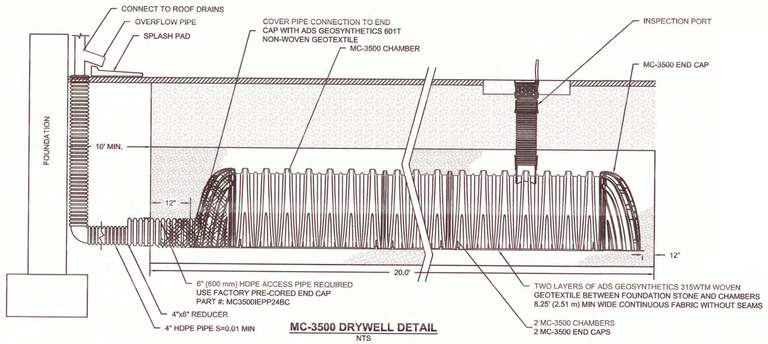

MC-3500 DRYWELL DETAIL
NTS

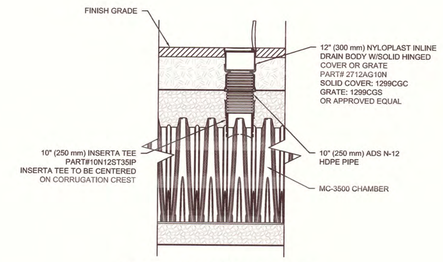

MC-3500 INSPECTION PORT DETAIL
NTS

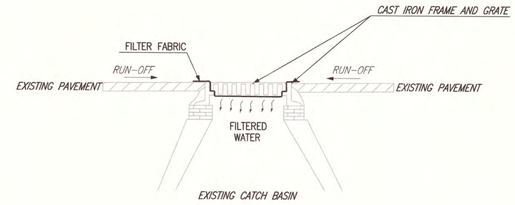

NOTE: SILT SACKS SHALL BE INSPECTED AFTER EVERY MAJOR STORM AND SILT SHALL BE REMOVED WHEN ACCUMULATED TO ALLOW CATCH BASIN TO FUNCTION PROPERLY.

SILT SACK
(NOT TO SCALE)

FOR REGISTRY USE ONLY

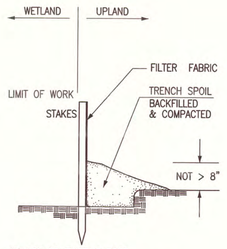

*ATTACH TO EXISTING POST AND RAIL FENCE WHERE NECESSARY

SILT FENCE
(NOT TO SCALE)

1. SILT FENCE, AND/OR APPROVED EQUAL SHALL BE USED FOR STABILIZING SLOPES GREATER THAN 3:1 SLOPE
2. INSPECT AFTER EVERY MAJOR STORM.
3. SILT SHALL BE REMOVED AS NECESSARY TO MAINTAIN PROPER FUNCTION.

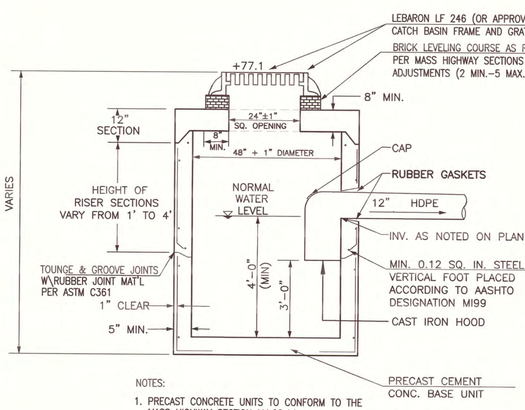

NOTES:
1. PRECAST CONCRETE UNITS TO CONFORM TO THE MASS HIGHWAY SECTION M4.02.14
2. 4000 PSI MINIMUM COMPRESSIVE STRENGTH
3. PRECAST UNITS TO BE HS–20 LOADING
4. EXTERIOR SURFACES TO BE SEALED W\ COLD APPLIED BITUMINOUS SEALER
5. CASTINGS FOR FRAME, GRATES, COVERS & HOODS TO CONFORM TO ASTM A48, GRADE 30 MINIMUM & COATED WITH APPROVED BLACK ASPHALTUM.

PROVIDE RUBBER GASKETS AND EXTERIOR COATED WITH BITUMINOUS SEAL PER PLANNING BOARD RULES AND REGULATIONS

PRECAST GASOLINE TRAP CATCH BASIN
(NOT TO SCALE)

DRYWELL NOTES:

1. MC-3500 CHAMBERS SHALL CONFORM TO THE REQUIREMENTS OF ASTM F2418 "STANDARD SPECIFICATION FOR POLYPROPYLENE (PP) CORRUGATED WALL STORMWATER COLLECTION CHAMBERS".
2. MC-3500 CHAMBERS SHALL BE DESIGNED IN ACCORDANCE WITH ASTM F2787 "STANDARD PRACTICE FOR STRUCTURAL DESIGN OF THERMOPLASTIC CORRUGATED WALL STORMWATER COLLECTION CHAMBERS".
3. "ACCEPTABLE FILL MATERIALS" A, B, C, D LAYERS FROM MANUFACUTURERS DESIGN GUIDANCE PROVIDES MATERIAL LOCATIONS, DESCRIPTIONS, GRADATIONS, AND COMPACTION REQUIREMENTS FOR FOUNDATION, EMBEDMENT, AND FILL MATERIALS.
4. THE "SITE DESIGN ENGINEER" REFERS TO THE ENGINEER RESPONSIBLE FOR THE DESIGN AND LAYOUT OF THE STORMTECH CHAMBERS FOR THIS PROJECT.
5. THE SITE DESIGN ENGINEER IS RESPONSIBLE FOR ASSESSING THE BEARING RESISTANCE (ALLOWABLE BEARING CAPACITY) OF THE SUBGRADE SOILS AND THE DEPTH OF FOUNDATION STONE WITH CONSIDERATION FOR THE RANGE OF EXPECTED SOIL MOISTURE CONDITIONS.
6. PERIMETER STONE MUST BE EXTENDED HORIZONTALLY TO THE EXCAVATION WALL FOR BOTH VERTICAL AND SLOPED EXCAVATION WALLS.
7. ONCE LAYER 'C' IS PLACED, ANY SOIL/MATERIAL CAN BE PLACED IN LAYER 'D' UP TO THE FINISHED GRADE. MOST PAVEMENT SUBBASE SOILS CAN BE USED TO REPLACE THE MATERIAL REQUIREMENTS OF LAYER 'C' OR 'D' AT THE SITE DESIGN ENGINEER'S DISCRETION.

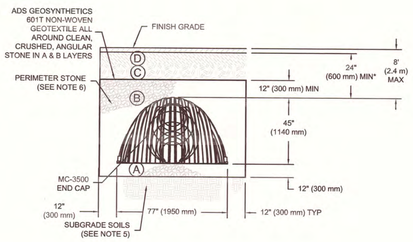

INSPECTION & MAINTENANCE

STEP 1) INSPECT ROW FOR SEDIMENT
- A.1. INSPECTION PORTS
- A.2. REMOVE/OPEN LID ON NYLOPLAST INLINE DRAIN
- A.3. USING A FLASHLIGHT AND STADIA ROD, MEASURE DEPTH OF SEDIMENT AND RECORD ON MAINTENANCE LOG
- A.4. LOWER A CAMERA INTO ISOLATOR ROW FOR VISUAL INSPECTION OF SEDIMENT LEVELS (OPTIONAL)
- A.5. IF SEDIMENT IS AT, OR ABOVE, 3" (80 mm) PROCEED TO STEP 2. IF NOT, PROCEED TO STEP 3.

STEP 2) CLEAN OUT ROW USING THE JETVAC PROCESS
- A. A FIXED CULVERT CLEANING NOZZLE WITH REAR FACING SPREAD OF 45° (1.1 m) OR MORE IS PREFERRED
- B. APPLY MULTIPLE PASSES OF JETVAC UNTIL BACKFLUSH WATER IS CLEAN
- C. VACUUM STRUCTURE SUMP AS REQUIRED

STEP 3) REPLACE ALL COVERS, GRATES, FILTERS, AND LIDS; RECORD OBSERVATIONS AND ACTIONS.

NOTES

1. **INSPECT EVERY 12 MONTHS .**
2. CONDUCT JETTING AND VACTORING ANNUALLY OR WHEN INSPECTION SHOWS THAT MAINTENANCE IS NECESSARY.

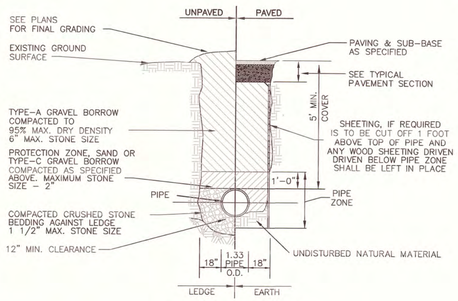

TYPICAL WATER TRENCH DETAIL
NOT TO SCALE

1. GRAVEL BORROW SHALL CONFORM TO MASS HIGHWAY SPECIFICATION M1.03.0
2. CRUSHED STONE BEDDING SHALL CONFORM TO MASS HIGHWAY SPECIFICATION M2.01.1

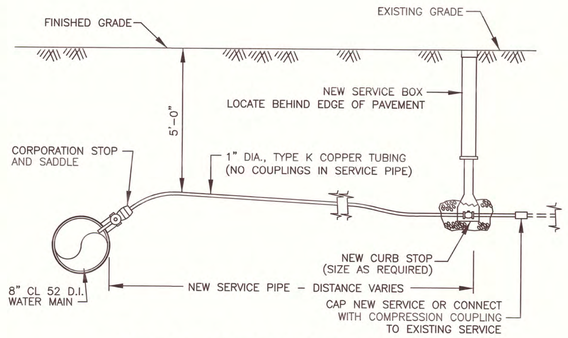

TYPICAL HOUSE SERVICE CONNECTION
N.T.S.

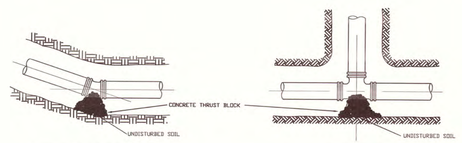

PLAN HORIZONTAL BEND — PLAN TEE

NOTE: COVER MECHANICAL JOINTS WITH 3 MIL POLYETHYLENE TO PROTECT BOLTS FROM CONCRETE THRUST BLOCK

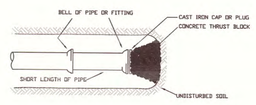

PLAN PLUG END OF LINE

THRUST BLOCK REQUIREMENTS	
FITTING	MIN BEARING AREA (SF)
8"X 1/8 BEND	12
12"X 8" TEE	12
10"X 8" TEE	10
6"X 8" TEE	9
8"X 6" TEE	3
8" CAP / PLUG	12
12"X 8" REDUCER	8
10"X 8" REDUCER	6
8" X 6" REDUCER	4
8" 22 1/2"\ & 45° BENDS	8
ALL TEES AND VALVES	10
HYDRANTS	9

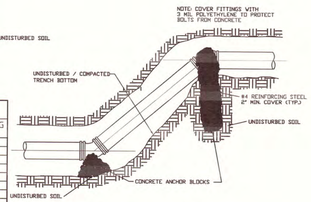

ELEVATION – VERTICAL BENDS

ANCHORAGE DETAILS
(NOT TO SCALE)

GENERAL:

1. TOPOGRAPHIC DATA BY GRADY CONSULTING, L.L.C.
2. THE ACCURACY OF EXISTING UTILITY LOCATIONS, DIMENSIONS AND LINES IS FROM EXISTING INFORMATION OF RECORD AND IS NOT WARRANTED. CONTRACTOR TO VERIFY PRIOR TO INITIATING CONSTRUCTION.
3. PRIOR TO CONSTRUCTION, THE CONTRACTOR SHALL SECURE ALL NECESSARY STATE, MUNICIPAL AND OTHER UTILITY PERMITS AND VERIFY THE PROPOSED LOCATIONS OF UTILITIES WITH UTILITY COMPANIES.
4. CONTRACTOR SHALL NOTIFY "DIG SAFE" (1–888–344–7233) AT LEAST 4 DAYS PRIOR TO CONSTRUCTION.
5. UNDERGROUND UTILITIES SHALL BE INSTALLED IN ACCORDANCE WITH THE SPECIFICATIONS OF THE APPROPRIATE DEPARTMENT OR COMPANY. THE CONTRACTOR SHALL NOTIFY THE QUINCY D.P.W. AT LEAST 4 DAYS PRIOR TO CONSTRUCTION OF DRAINAGE & WATER SYSTEMS.
6. ALL CONSTRUCTION SHALL CONFORM TO CITY OF QUINCY PLANNING BOARD RULES AND REGULATIONS,
7. ALL STUMPS SHALL BE DISPOSED OFF SITE.

WATER SYSTEM NOTES:

1. ALL WATER SERVICES SHALL BE 1" TYPE "K" COPPER TUBING OR APPROVED EQUAL.
2. ALL CONSTRUCTION MATERIALS AND METHODS SHALL CONFORM TO CITY OF QUINCY WATER DEPARTMENT REQUIREMENTS.
3. ALL WATER GATES SHALL CONFORM TO CITY OF QUINCY WATER DEPARTMENT STARDARDS.

SEWER SYSTEM NOTES:

1. INSTALLATION OF SANITARY SEWER FACIILITIES SHALL BE SUBJECT TO INSPECTION AND APPROVAL OF THE CITY ENGINEER.

STORM DRAIN NOTES:

1. INSTALLATION OF STORM WATER DRAINS SHALL BE SUBJECT TO INSPECTION AND APPROVAL OF THE CITY ENGINEER.
2. THE CONTRACTOR SHALL APPLY FOR A STORMWATER CONNECTION PERMIT FROM THE DEPARTMENT OF PUBLIC WORKS PRIOR TO CONSTRUCTION.

EROSION CONTROL:

1. ALL CUT AND FILL AREAS, AND DISTURBED DRAINAGE AREAS ARE TO BE BROUGHT TO FINISHED GRADE WITH A MIN. OF 4" OF LOAM, SEEDED WITH A MIXTURE OF ANNUAL RYEGRASS AND PERENNIAL GRASSES, AND MAINTAINED UNTIL VEGETATION STABILIZES THESE AREAS.
2. HAY MULCH, OR OTHER SUITABLE EROSION PROTECTION, SHALL BE UTILIZED ON ALL EXPOSED SLOPES.
3. SILT SACKS IN BOTH EXISTING AND NEWLY INSTALLED CATCH BASINS SHALL BE USED TO TRAP SEDIMENT PRIOR TO ENTERING THE DRAINAGE SYSTEM.

CONSTRUCTION SEQUENCE:

STAKE PROPERTY LINE ADJACENT TO FOREST AVENUE EXTENSION (PARCEL 4108–9)

INSTALL EROSION CONTROLS

CLEAR AND GRUB SITE AREAS

BRING CUT AREAS TO SUBGRADE

INSTALL UTILITIES (ie, DRAIN, WATER, ELECTRIC, etc.)

CATCH BASIN GRATES ARE TO BE SET AT BINDER GRADE

INSTALL EROSION CONTROLS ON EXPOSED SLOPES

PLACE BASE COURSE OF PAVEMENT / LOAM AND SEED GRASS AREAS

FINISH PAVING ON ROADWAY

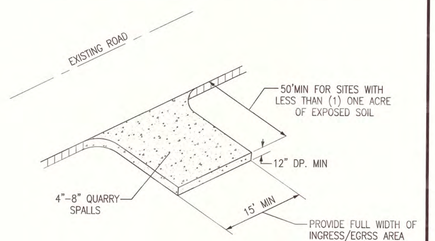

1. INSPECT DAILY.
2. SILT SHALL BE REMOVED AS NECESSARY TO MAINTAIN PROPER FUNCTION.

STONE CONSTRUCTION ENTRANCE
(NOT TO SCALE)

REVISIONS	
11/16/15	SIDEWALK AND ASSESSORS MBLU
1/14/16	REVIEW COMMENTS
3/5/16	REVIEW COMMENTS
5/16/16	HOLLISTON ST TURN AROUND

COMMONWEALTH OF MASSACHUSETTS
DARREN M. GRADY
CIVIL
No. 40715
REGISTERED
PROFESSIONAL ENGINEER

DEFINITIVE SUBDIVISION PLAN

HOLLISTON STREET and FOREST AVENUE
QUINCY, MASSACHUSETTS

PREPARED FOR:
THE MILTON CORPORATION
1094 BLUE HILL AVENUE
MILTON, MA 02186

SEPTEMBER 24, 2015
SCALE: 1"=20'
JOB No. 15–110

GRADY CONSULTING, L.L.C.
Civil Engineers and Land Surveyors
71 Evergreen Street, Suite 1, Kingston, MA 02364
Phone (781) 585–2300 Fax (781) 585–2378

(DETAILS) SHEET 6 OF 8

COPYRIGHT © BY GRADY CONSULTING, L.L.C.
NO PART OF THIS DOCUMENT MAY BE REPRODUCED, STORED IN A RETRIEVAL SYSTEM, OR TRANSMITTED IN ANY FORM OR BY ANY MEANS, ELECTRONIC, MECHANICAL, PHOTOCOPYING, RECORDING, OR OTHERWISE, WITHOUT THE PRIOR WRITTEN PERMISSION OF GRADY CONSULTING, L.L.C. IT IS A VIOLATION OF ANY REGULATORY AUTHORITY WHICH MAY REPRODUCE, IT IN CONJUNCTION WITH THE PERFORMANCE OF OFFICIAL BUSINESS UNDER ITS JURISDICTION. ANY MODIFICATIONS MADE TO THIS DOCUMENT WITHOUT THE EXPRESS WRITTEN CONSENT OF GRADY CONSULTING, L.L.C. SHALL RENDER IT UNUSABLE.

JA\2015\15-110\DWG\2016-04-05 Concept - Turn around - 100 ft lots.dwg, 5/17/2016 3:27:57 PM

UNDERDRAIN DETAIL
NTS

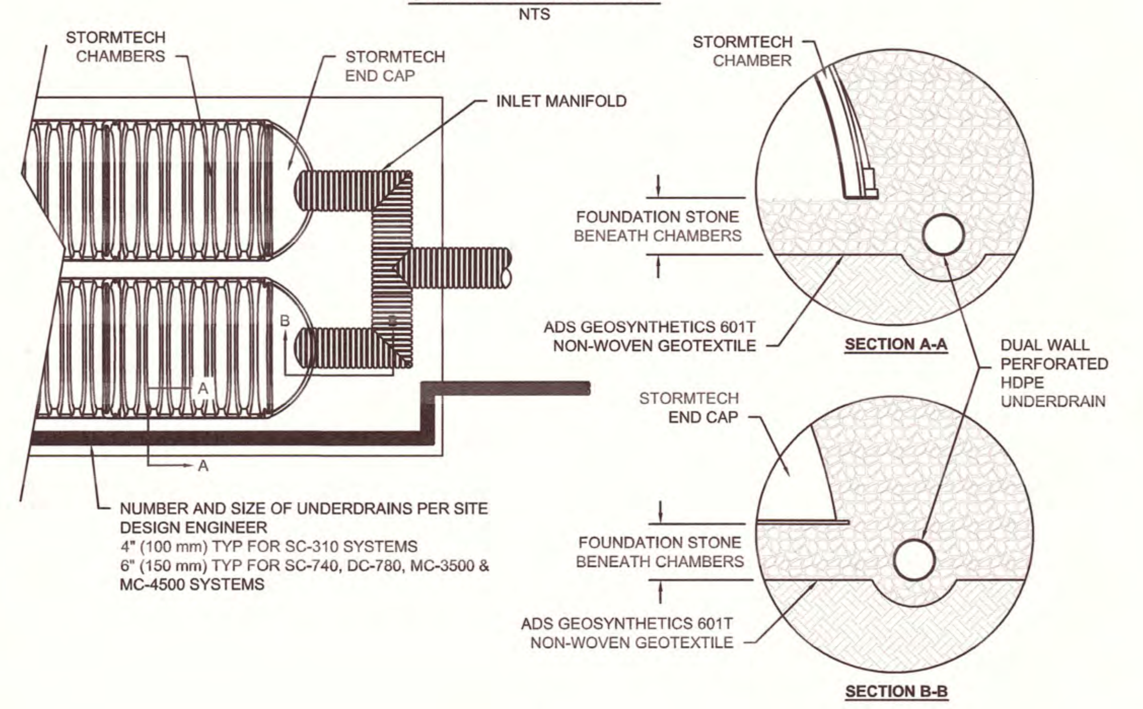

SEPTIC TANK–2,000 GALLON MONOLITHIC H20 LOADING

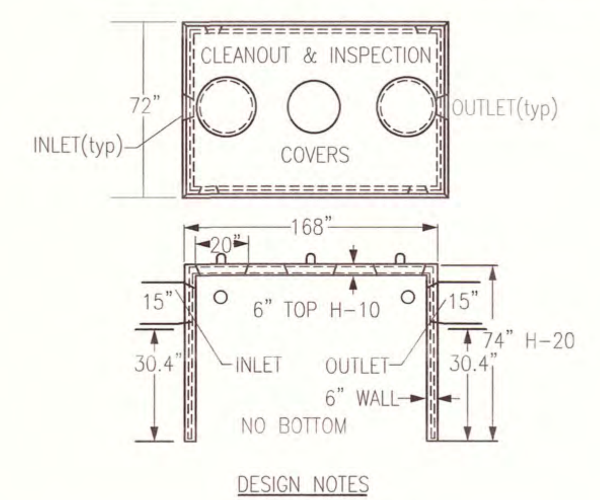

DESIGN NOTES

1. TANK COMPLETELY REINFORCED (PER ASTM C1227)
2. CONCRETE IS 4,000 P.S.I. @ 28 DAYS.

2000 GALLON MONOLITHIC TANK DETAIL
(NOT TO SCALE)

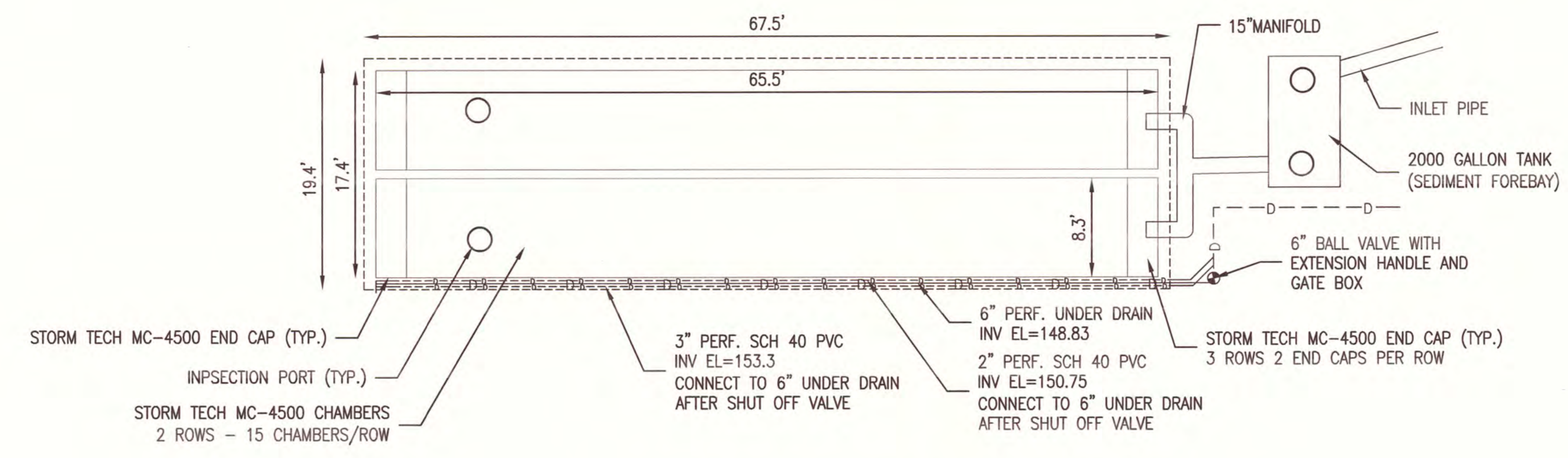

DRAIN SYSTEM 1
(NOT TO SCALE)

FOR REGISTRY USE ONLY

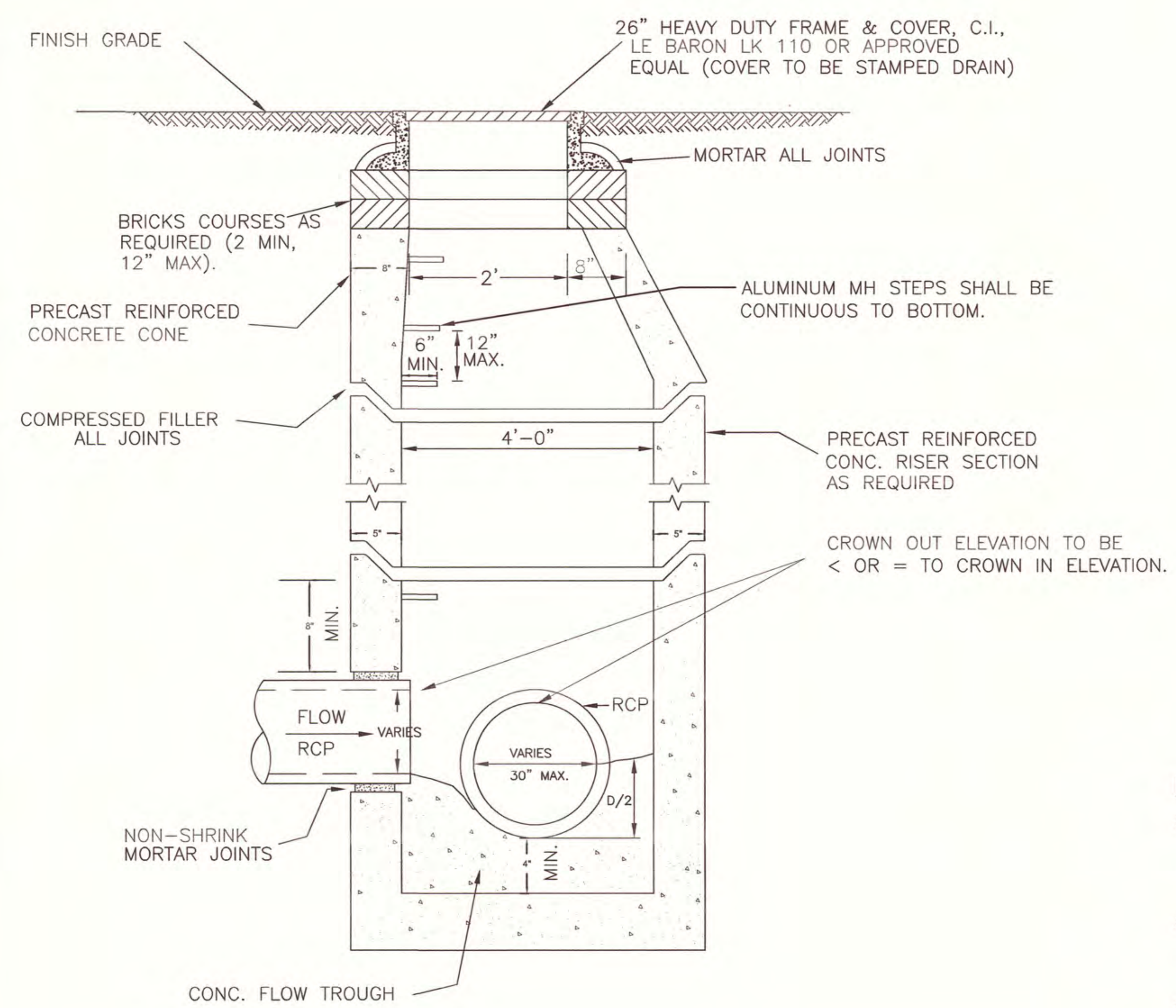

TYPICAL PRECAST CONCRETE DRAIN MANHOLE
(NOT TO SCALE)

MC-SERIES END CAP INSERTION DETAIL
NTS

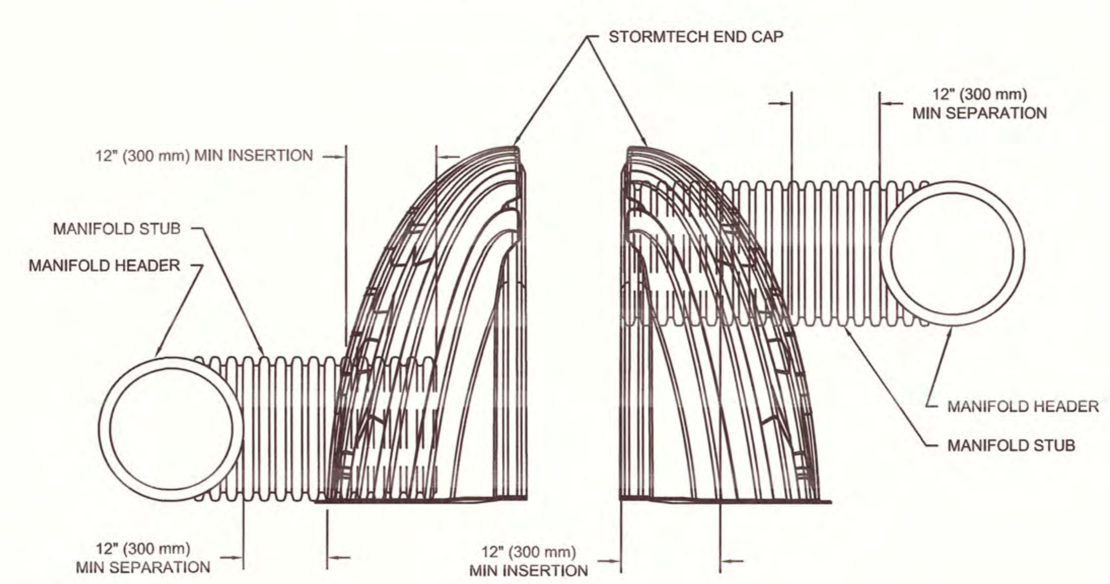

NOTE: MANIFOLD STUB MUST BE LAID HORIZONTAL FOR A PROPER FIT IN END CAP OPENING.

ACCEPTABLE FILL MATERIALS: STORMTECH MC-4500 CHAMBER SYSTEMS

	MATERIAL LOCATION	DESCRIPTION	AASHTO MATERIAL CLASSIFICATIONS	COMPACTION / DENSITY REQUIREMENT
D	**FINAL FILL:** FILL MATERIAL FOR LAYER 'D' STARTS FROM THE TOP OF THE 'C' LAYER TO THE BOTTOM OF FLEXIBLE PAVEMENT OR UNPAVED FINISHED GRADE ABOVE. NOTE THAT PAVEMENT SUBBASE MAY BE PART OF THE 'D' LAYER	ANY SOIL/ROCK MATERIALS, NATIVE SOILS, OR PER ENGINEER'S PLANS. CHECK PLANS FOR PAVEMENT SUBGRADE REQUIREMENTS.	N/A	PREPARE PER SITE DESIGN ENGINEER'S PLANS. PAVED INSTALLATIONS MAY HAVE STRINGENT MATERIAL AND PREPARATION REQUIREMENTS.
C	**INITIAL FILL:** FILL MATERIAL FOR LAYER 'C' STARTS FROM THE TOP OF THE EMBEDMENT STONE ('B' LAYER) TO 24" (600 mm) ABOVE THE TOP OF THE CHAMBER. NOTE THAT PAVEMENT SUBBASE MAY BE A PART OF THE 'C' LAYER.	GRANULAR WELL-GRADED SOIL/AGGREGATE MIXTURES, <35% FINES OR PROCESSED AGGREGATE. MOST PAVEMENT SUBBASE MATERIALS CAN BE USED IN LIEU OF THIS LAYER.	AASHTO M145[1] A-1, A-2-4, A-3 OR AASHTO M43[1] 3, 357, 4, 467, 5, 56, 57, 6, 67, 68, 7, 78, 8, 89, 9, 10	BEGIN COMPACTIONS AFTER 24" (600 mm) OF MATERIAL OVER THE CHAMBERS IS REACHED. COMPACT ADDITIONAL LAYERS IN 12" (300 mm) MAX LIFTS TO A MIN. 95% PROCTOR DENSITY FOR WELL GRADED MATERIAL AND 95% RELATIVE DENSITY FOR PROCESSED AGGREGATE MATERIALS.
B	**EMBEDMENT STONE:** FILL SURROUNDING THE CHAMBERS FROM THE FOUNDATION STONE ('A' LAYER) TO THE 'C' LAYER ABOVE.	CLEAN, CRUSHED, ANGULAR STONE, NOMINAL SIZE DISTRIBUTION BETWEEN 3/4-2 INCH (20-50 mm)	AASHTO M43[1] 3, 4	NO COMPACTION REQUIRED.
A	**FOUNDATION STONE:** FILL BELOW CHAMBERS FROM THE SUBGRADE UP TO THE FOOT (BOTTOM) OF THE CHAMBER.	CLEAN, CRUSHED, ANGULAR STONE, NOMINAL SIZE DISTRIBUTION BETWEEN 3/4-2 INCH (20-50 mm)	AASHTO M43[1] 3, 4	PLATE COMPACT OR ROLL TO ACHIEVE A FLAT SURFACE. [2,3]

PLEASE NOTE:
1. THE LISTED AASHTO DESIGNATIONS ARE FOR GRADATIONS ONLY. THE STONE MUST ALSO BE CLEAN, CRUSHED, ANGULAR. FOR EXAMPLE, A SPECIFICATION FOR #4 STONE WOULD STATE: "CLEAN, CRUSHED, ANGULAR NO. 4 (AASHTO M43) STONE".
2. STORMTECH COMPACTION REQUIREMENTS ARE MET FOR 'A' LOCATION MATERIALS WHEN PLACED AND COMPACTED IN 9" (230 mm) (MAX) LIFTS USING TWO FULL COVERAGES WITH A VIBRATORY COMPACTOR.
3. WHERE INFILTRATION SURFACES MAY BE COMPROMISED BY COMPACTION, FOR STANDARD DESIGN LOAD CONDITIONS, A FLAT SURFACE MAY BE ACHIEVED BY RAKING OR DRAGGING WITHOUT COMPACTION EQUIPMENT. FOR SPECIAL LOAD DESIGNS, CONTACT STORMTECH FOR COMPACTION REQUIREMENTS.

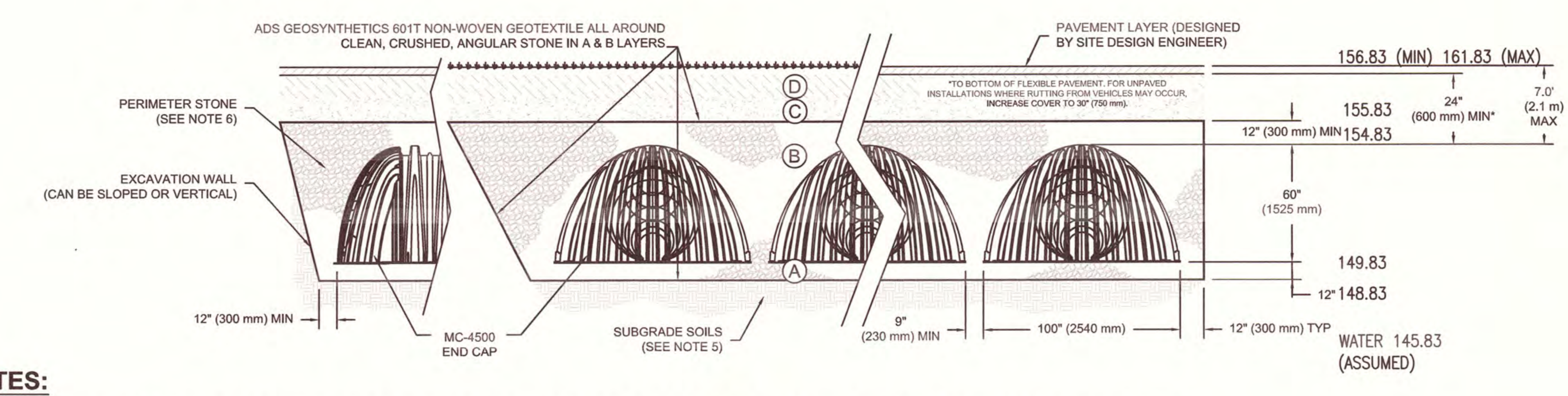

INSPECTION & MAINTENANCE

STEP 1) INSPECT ROWS FOR SEDIMENT
- A. INSPECTION PORTS (IF PRESENT)
  - A.1. REMOVE/OPEN LID ON NYLOPLAST INLINE DRAIN
  - A.2. USING A FLASHLIGHT AND STADIA ROD, MEASURE DEPTH OF SEDIMENT AND RECORD ON MAINTENANCE LOG
  - A.3. LOWER A CAMERA INTO ROW FOR VISUAL INSPECTION OF SEDIMENT LEVELS (OPTIONAL)
  - A.4. IF SEDIMENT IS AT, OR ABOVE, 3" (80 mm) PROCEED TO STEP 2. IF NOT, PROCEED TO STEP 3.

STEP 2) CLEAN OUT ROWS USING THE JETVAC PROCESS
- A. A FIXED CULVERT CLEANING NOZZLE WITH REAR FACING SPREAD OF 45" (1.1 m) OR MORE IS PREFERRED
- B. APPLY MULTIPLE PASSES OF JETVAC UNTIL BACKFLUSH WATER IS CLEAN
- C. VACUUM STRUCTURE SUMP AS REQUIRED

STEP 3) REPLACE ALL COVERS, GRATES, FILTERS, AND LIDS; RECORD OBSERVATIONS AND ACTIONS.

STEP 4) INSPECT AND CLEAN BASINS AND MANHOLES UPSTREAM OF THE STORMTECH SYSTEM.

NOTES

1. INSPECT EVERY 6 MONTHS DURING THE FIRST YEAR OF OPERATION. ADJUST THE INSPECTION INTERVAL BASED ON PREVIOUS OBSERVATIONS OF SEDIMENT ACCUMULATION AND HIGH WATER ELEVATIONS.
2. CONDUCT JETTING AND VACTORING ANNUALLY OR WHEN INSPECTION SHOWS THAT MAINTENANCE IS NECESSARY.

NOTES:

1. MC-4500 CHAMBERS SHALL CONFORM TO THE REQUIREMENTS OF ASTM F2418 "STANDARD SPECIFICATION FOR POLYPROPYLENE (PP) CORRUGATED WALL STORMWATER COLLECTION CHAMBERS".
2. MC-4500 CHAMBERS SHALL BE DESIGNED IN ACCORDANCE WITH ASTM F2787 "STANDARD PRACTICE FOR STRUCTURAL DESIGN OF THERMOPLASTIC CORRUGATED WALL STORMWATER COLLECTION CHAMBERS".
3. "ACCEPTABLE FILL MATERIALS" TABLE ABOVE PROVIDES MATERIAL LOCATIONS, DESCRIPTIONS, GRADATIONS, AND COMPACTION REQUIREMENTS FOR FOUNDATION, EMBEDMENT, AND FILL MATERIALS.
4. THE "SITE DESIGN ENGINEER" REFERS TO THE ENGINEER RESPONSIBLE FOR THE DESIGN AND LAYOUT OF THE STORMTECH CHAMBERS FOR THIS PROJECT.
5. THE SITE DESIGN ENGINEER IS RESPONSIBLE FOR ASSESSING THE BEARING RESISTANCE (ALLOWABLE BEARING CAPACITY) OF THE SUBGRADE SOILS AND THE DEPTH OF FOUNDATION STONE WITH CONSIDERATION FOR THE RANGE OF EXPECTED SOIL MOISTURE CONDITIONS.
6. PERIMETER STONE MUST BE EXTENDED HORIZONTALLY TO THE EXCAVATION WALL FOR BOTH VERTICAL AND SLOPED EXCAVATION WALLS.
7. ONCE LAYER 'C' IS PLACED, ANY SOIL/MATERIAL CAN BE PLACED IN LAYER 'D' UP TO THE FINISHED GRADE. MOST PAVEMENT SUBBASE SOILS CAN BE USED TO REPLACE THE MATERIAL REQUIREMENTS OF LAYER 'C' OR 'D' AT THE SITE DESIGN ENGINEER'S DISCRETION.

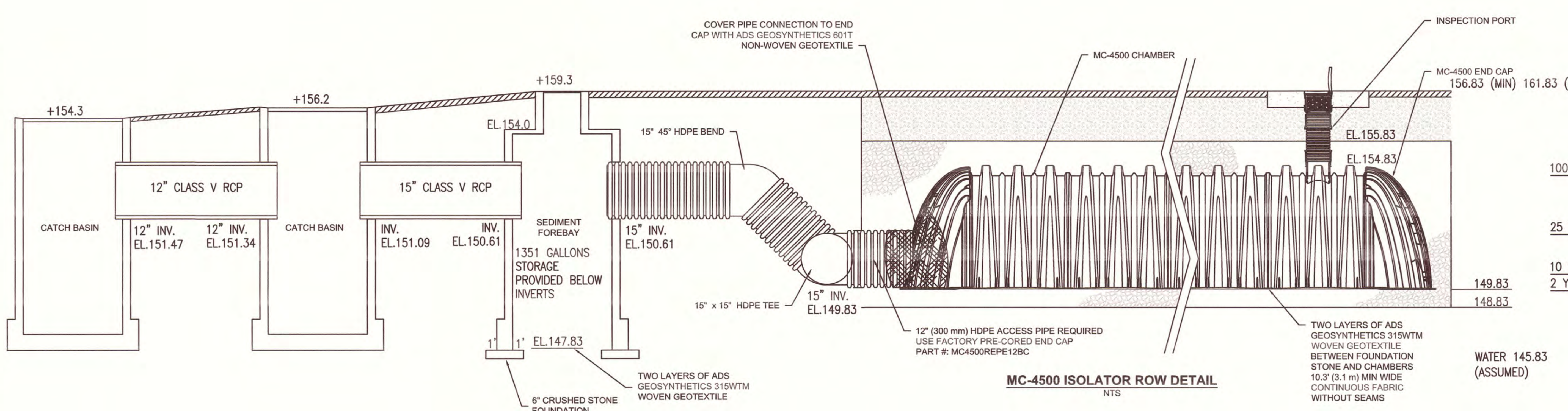

MC-4500 ISOLATOR ROW DETAIL
NTS

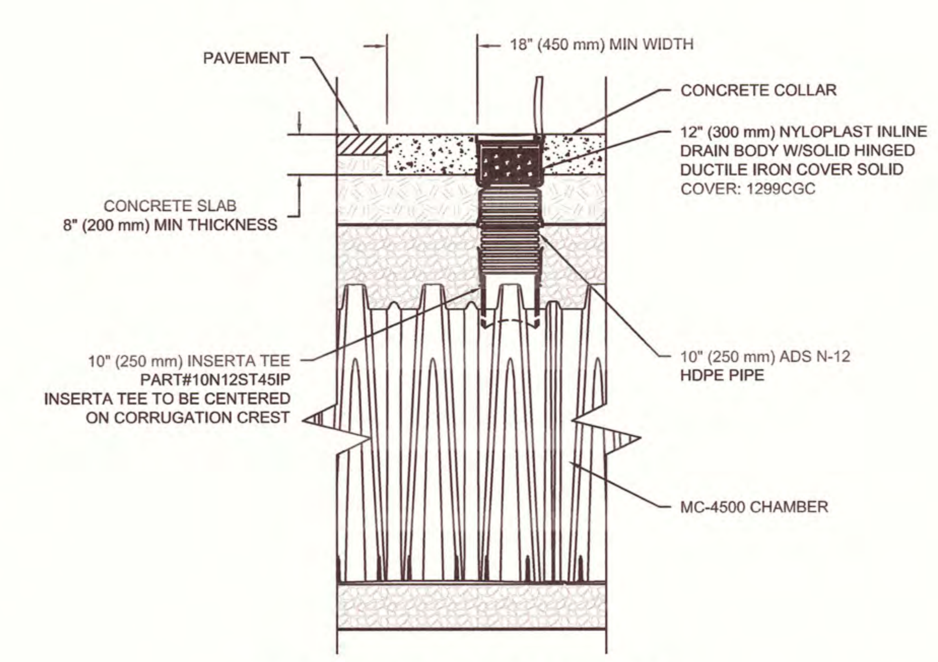

MC-4500 INSPECTION PORT DETAIL
NTS

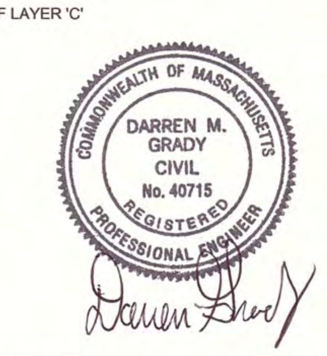

REVISIONS	
11/16/15	SIDEWALK AND ASSESSORS MBLU
1/14/16	REVIEW COMMENTS
3/5/16	REVIEW COMMENTS
5/16/16	HOLLISTON ST TURN AROUND

DEFINITIVE SUBDIVISION PLAN

HOLLISTON STREET and FOREST AVENUE QUINCY, MASSACHUSETTS

PREPARED FOR:
THE MILTON CORPORATION
1094 BLUE HILL AVENUE
MILTON, MA 02186

SEPTEMBER 24, 2015
SCALE: 1"=20'
JOB No. 15–110

GRADY CONSULTING, L.L.C.
Civil Engineers and Land Surveyors
71 Evergreen Street, Suite 1, Kingston, MA 02364
Phone (781) 585–2300 Fax (781) 585–2378

(DETAILS)

COPYRIGHT © BY GRADY CONSULTING, L.L.C.
NO PART OF THIS DOCUMENT MAY BE REPRODUCED, STORED IN A RETRIEVAL SYSTEM, OR TRANSMITTED IN ANY FORM OR BY ANY MEANS, ELECTRONIC, MECHANICAL, PHOTOCOPYING, RECORDING OR OTHERWISE, WITHOUT THE EXPRESS WRITTEN CONSENT OF GRADY CONSULTING, L.L.C. WITH THE EXCEPTION OF ANY REGULATORY AUTHORITY WHICH MAY REPRODUCE IT IN CONJUNCTION WITH THE PERFORMANCE OF OFFICIAL BUSINESS UNDER ITS JURISDICTION. ANY MODIFICATIONS MADE TO THIS DOCUMENT WITHOUT THE EXPRESS WRITTEN CONSENT OF GRADY CONSULTING, L.L.C. SHALL RENDER IT UNUSABLE.

J:\2015\15-110\DWG\2016-04-05 Concept - Turn around - 100 ft lots.dwg, 5/17/2016 3:28:33 PM

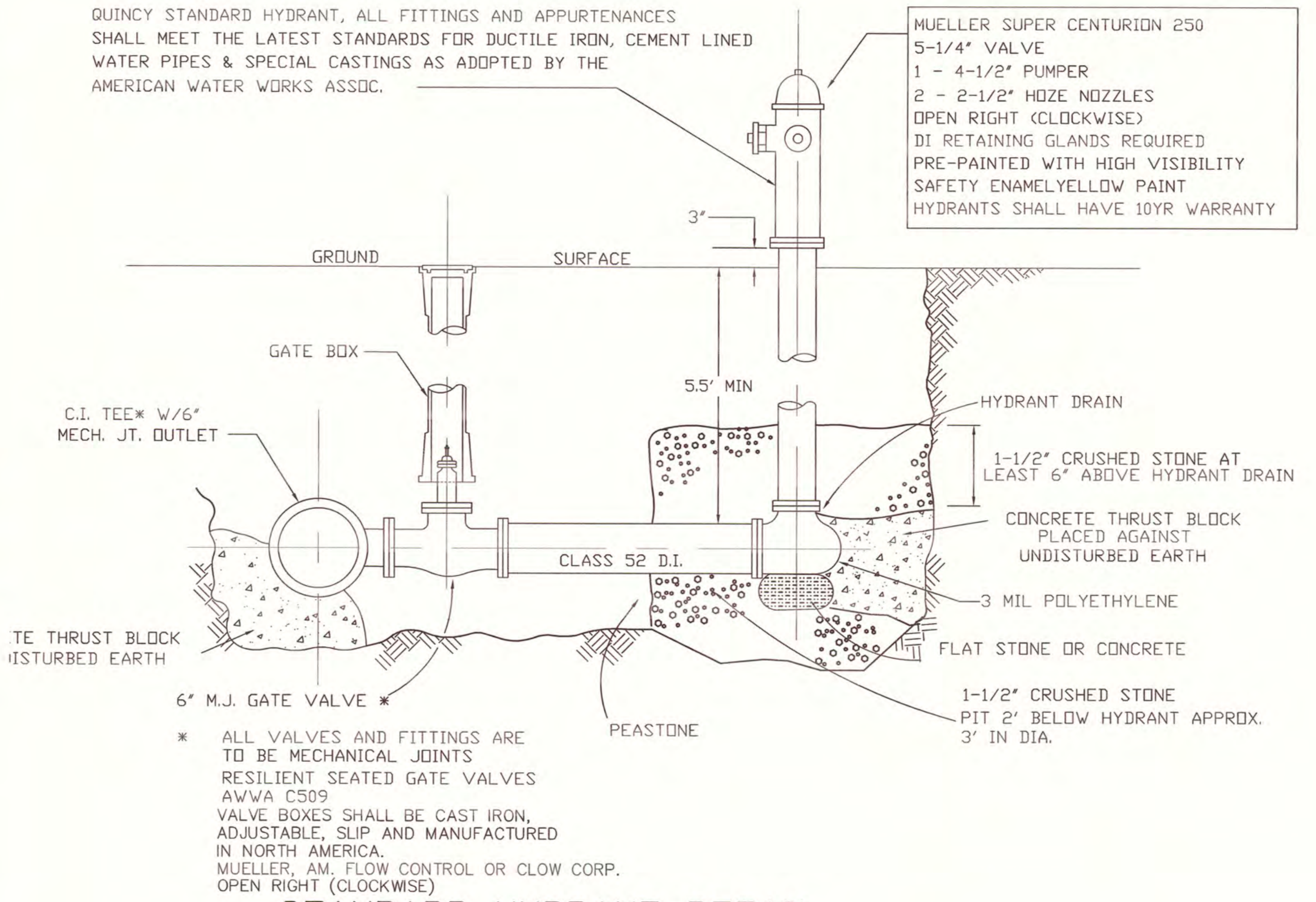

* ALL VALVES AND FITTINGS ARE TO BE MECHANICAL JOINTS
RESILIENT SEATED GATE VALVES AWWA C509
VALVE BOXES SHALL BE CAST IRON, ADJUSTABLE, SLIP AND MANUFACTURED IN NORTH AMERICA.
MUELLER, AM. FLOW CONTROL OR CLOW CORP.
OPEN RIGHT (CLOCKWISE)

STANDARD HYDRANT DETAIL

(NOT TO SCALE)

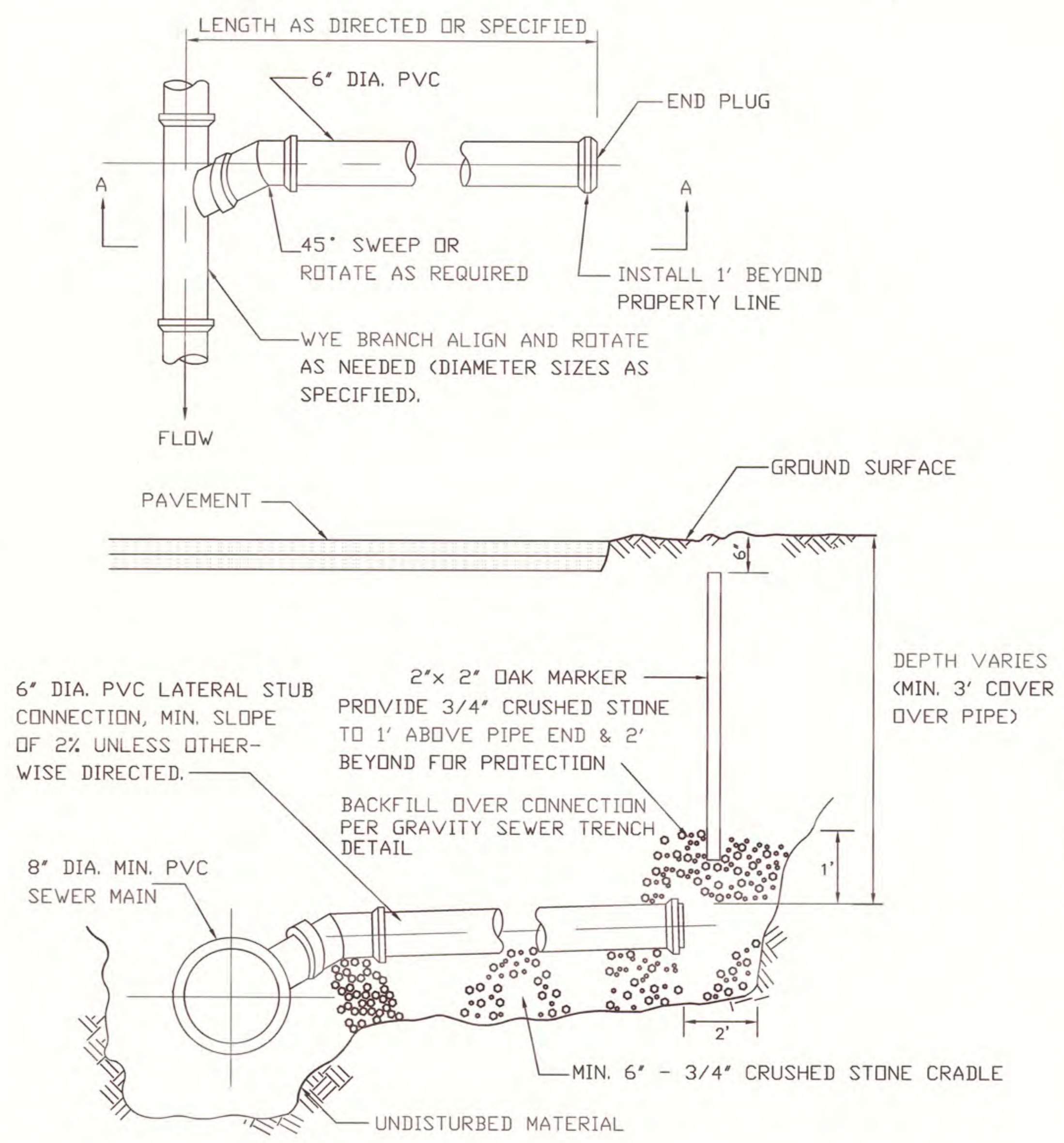

SECTION A-A

TYPICAL LATERAL STUB CONNECTION

(NOT TO SCALE)

LATERAL CONNECTION MANHOLE

WHERE REQUIRED, A MANHOLE TO BE CONSTRUCTED ON A LATERAL CONNECTION. THIS MANHOLE SHALL CONFORM TO THE SAME STANDARDS AS THE MAIN SEWER MANHOLES. (SEE SEWER MANHOLE DETAILS.)

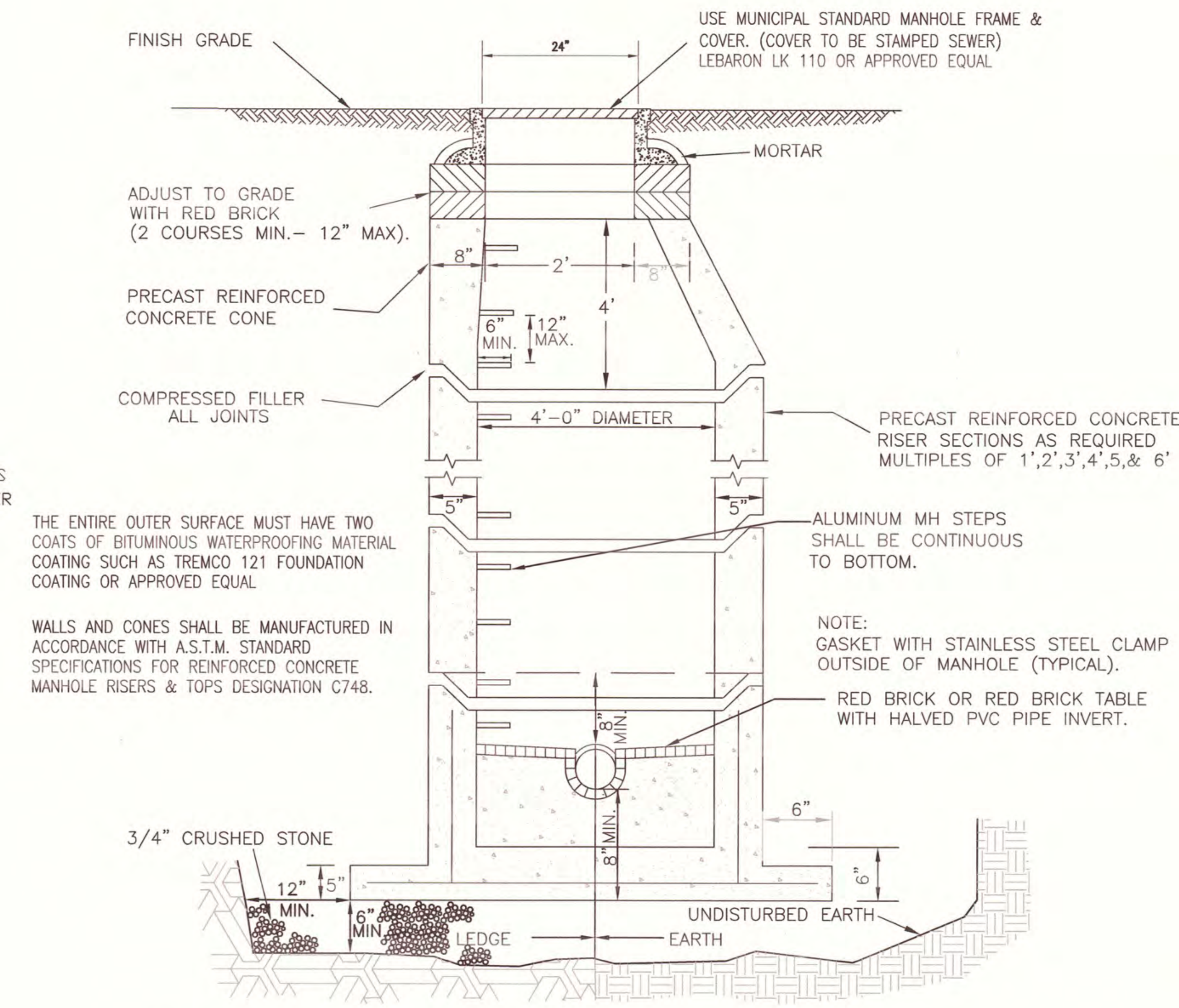

TYPICAL PRECAST CONCRETE SEWER MANHOLE

(NOT TO SCALE)

FOR REGISTRY USE ONLY

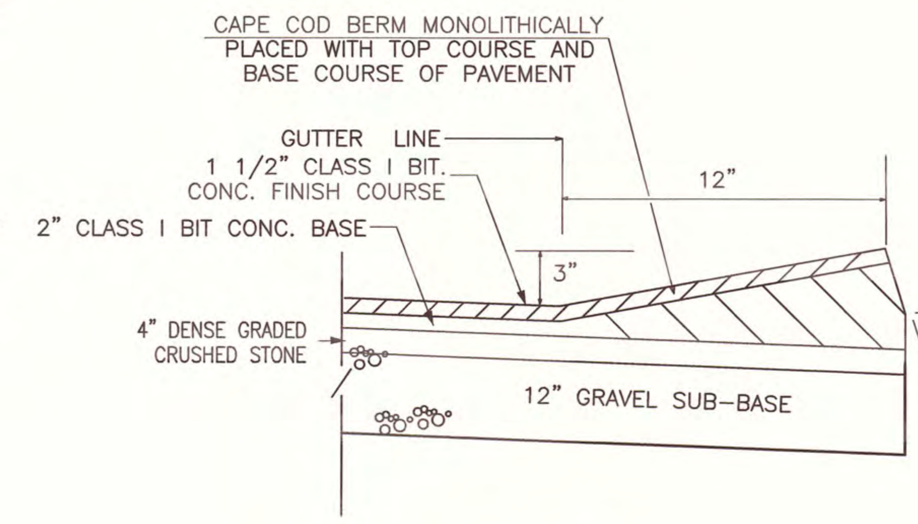

CAPE COD BERM DETAIL

(NOT TO SCALE)

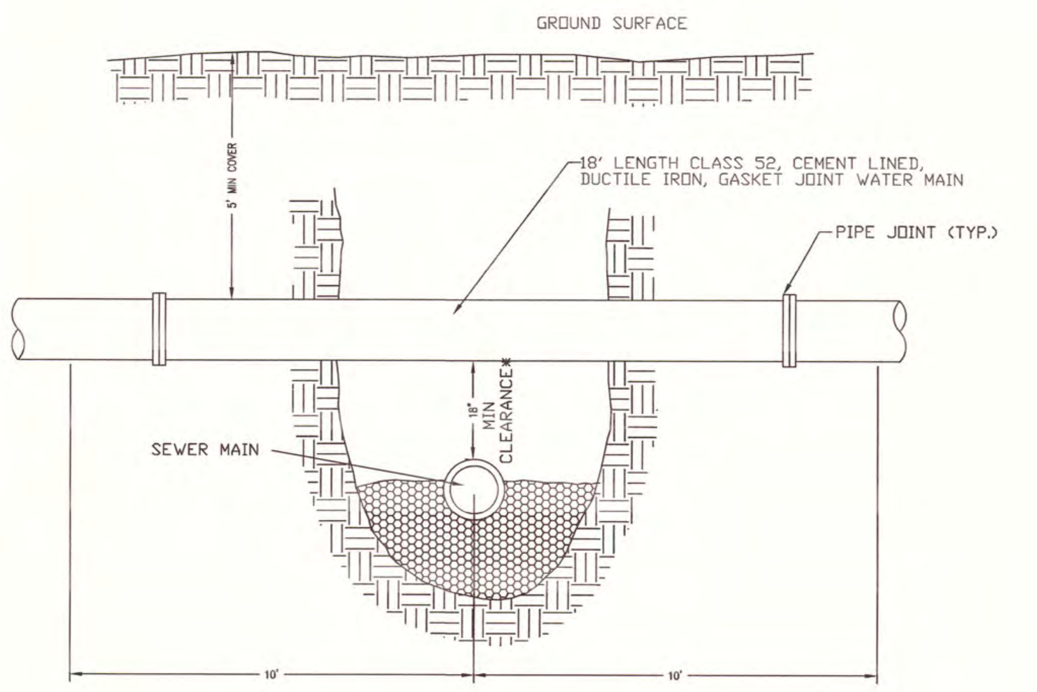

TYPICAL WATER CROSSING

* WHEN THE CROSSING AS SHOWN IS LESS THAN 18" VERTICAL CLEARANCE THE SEWER MAIN OR SERVICE MUST BE ENCASED 10' ON BOTH SIDES OF CROSSING WITH 6" OF 3000 PSI CONCRETE
IF THE SEWER MAIN OR SERVICE CROSSES ABOVE THE WATERMAIN OR SERVICE TOTAL ENCASEMENT, BOTH SIDES OF THE CROSSING IS REQUIRED, REGARDLESS OF SEPARATION.

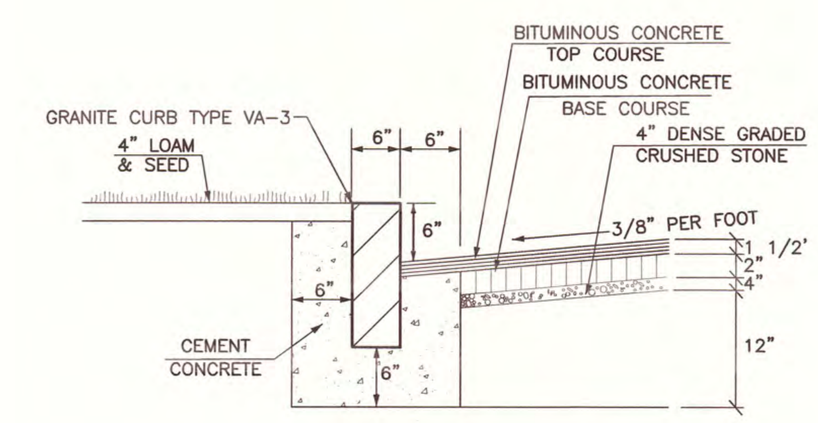

GRANITE CURB DETAIL

(NOT TO SCALE)

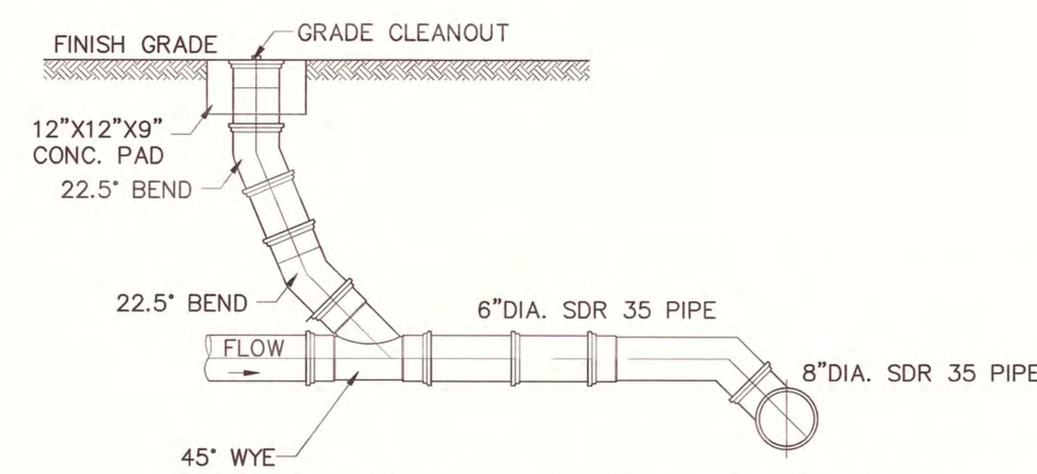

NOTE: CLEANOUTS SHALL BE INSTALLED FOR EACH SEWER SERVICE.

SEWER SERVICE CLEANOUT DETAIL

(NOT TO SCALE)

H (FT)	W (FT)	D (FT)	CONCRETE MASONRY FOOTING: SECTION AREA (SQ. FT.)	CONCRETE MASONRY FOOTING: VOLUME PER UNIT LENGTH (CU.YD./LIN.FT)	STONE MASONRY EXCLUDING COPING: SECTION AREA (SQ. FT.)	STONE MASONRY EXCLUDING COPING: VOLUME PER UNIT LENGTH (CU.YD./LIN.FT)
5.0	0.75	1.25	4.08	0.150	9.00	0.333
5.5			4.38	0.162	10.63	0.394
6.0			4.69	0.174	12.38	0.458
6.5			5.00	0.185	14.16	0.524
7.0			5.31	0.197	16.05	0.594
7.5			5.63	0.208	18.06	0.669
8.0	1.0	1.5	7.50	0.278	20.16	0.747
8.5			7.88	0.292	22.40	0.829
9.0			8.25	0.306	24.75	0.917
9.5			8.63	0.319	27.22	1.008
10.0	1.2	2.0	12.40	0.459	29.80	1.104
10.5			12.90	0.478	32.50	1.204
11.0			13.40	0.496	35.28	1.307
11.5			13.90	0.515	38.21	1.415
12.0			14.40	0.533	41.25	1.528
12.5			14.90	0.552	44.41	1.645
13.0	1.5	2.5	20.00	0.741	47.68	1.766
13.5			20.63	0.764	51.07	1.891
14.0			21.25	0.787	54.53	2.020
14.5			21.88	0.810	58.14	2.153
15.0			22.50	0.833	61.88	2.292
15.5			23.13	0.856	65.72	2.434
16.0			23.75	0.880	69.68	2.581
16.5	1.8	3.0	30.15	1.117	73.76	2.732
17.0			30.90	1.144	77.90	2.885
17.5			31.65	1.172	82.21	3.045
18.0			32.40	1.200	86.63	3.208
18.5			33.15	1.228	91.38	3.384
19.0			33.90	1.256	96.25	3.565
19.5			34.65	1.283	101.25	3.750
20.0			35.40	1.311	106.38	3.940
20.5			36.15	1.339	111.63	4.134
21.0			36.90	1.367	117.00	4.333
21.5			37.65	1.394	122.50	4.537
22.0			38.40	1.422	128.13	4.745
22.5			39.15	1.450	133.88	4.958
23.0			39.90	1.478	139.75	5.176
23.5			40.65	1.506	145.75	5.398
24.0			41.40	1.533	151.88	5.625
24.5			42.15	1.561	158.13	5.856
25.0			42.90	1.589	164.50	6.093
25.5			43.65	1.617	171.00	6.333
26.0			44.40	1.644	177.63	6.579
26.5			45.15	1.672	184.38	6.829

COPING TO BE PRECAST CONCRETE OR GRANITE OF UNIFORM DEPTH FOR THE ENTIRE LENGTH. DEPTH OF CONCRETE TO BE 1/12 THE AVERAGE "H" WITHIN THE LIMITS SHOWN. DEPTH OF GRANITE TO BE AS SHOWN ON THE PLANS, 6" OR 9".

FOR CHAIN LINK FENCE ON TOP OF WALL, THE COPING SHALL BE CONCRETE CAST-IN-PLACE WITH A MINIMUM DEPTH OF 12". THE LENGTH OF GALVANIZED PIPE SLEEVES FOR FENCE POSTS SHALL BE EQUAL TO THE DEPTH OF COPING.

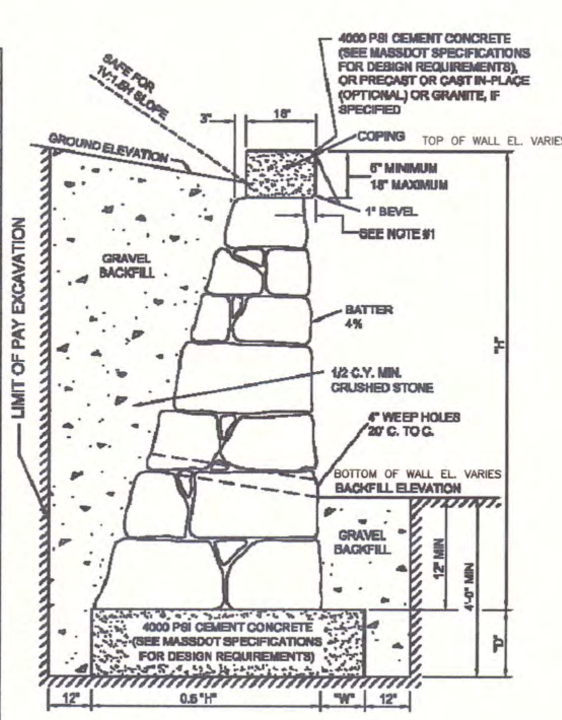

NOTES:

1. COPING OVERHANG TO BE APPROXIMATELY 3" FOR WALLS 10' OR MORE IN HEIGHT AND APPROXIMATELY 2" FOR WALLS LESS THAN 10' IN HEIGHT; IN A CONTINUOUS WALL OF VARYING HEIGHT THE OVERHANG WILL BE APPROXIMATELY 2" TO 3" FOR THE ENTIRE LENGTH.
2. ALL DIMENSIONS SHOWN ARE MINIMUM.
3. PAYMENT WILL BE BASED ON THE ACCOMPANYING TABLE.
4. TO BE FOUNDED ON SUITABLE SOIL.

CEMENTED STONE MASONRY WALL

(NOT TO SCALE)

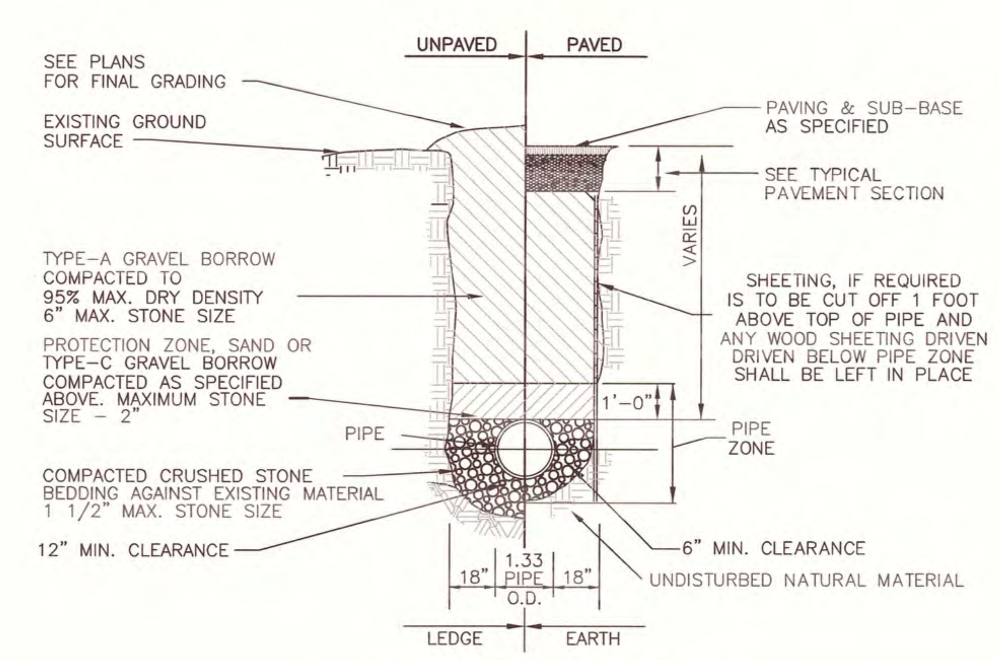

GRAVITY SEWER TRENCH DETAIL

NOT TO SCALE

1. GRAVEL BORROW SHALL CONFORM TO MASS HIGHWAY SPECIFICATION M1.03.0
2. CRUSHED STONE BEDDING SHALL CONFORM TO MASS HIGHWAY SPECIFICATION M2.01.1

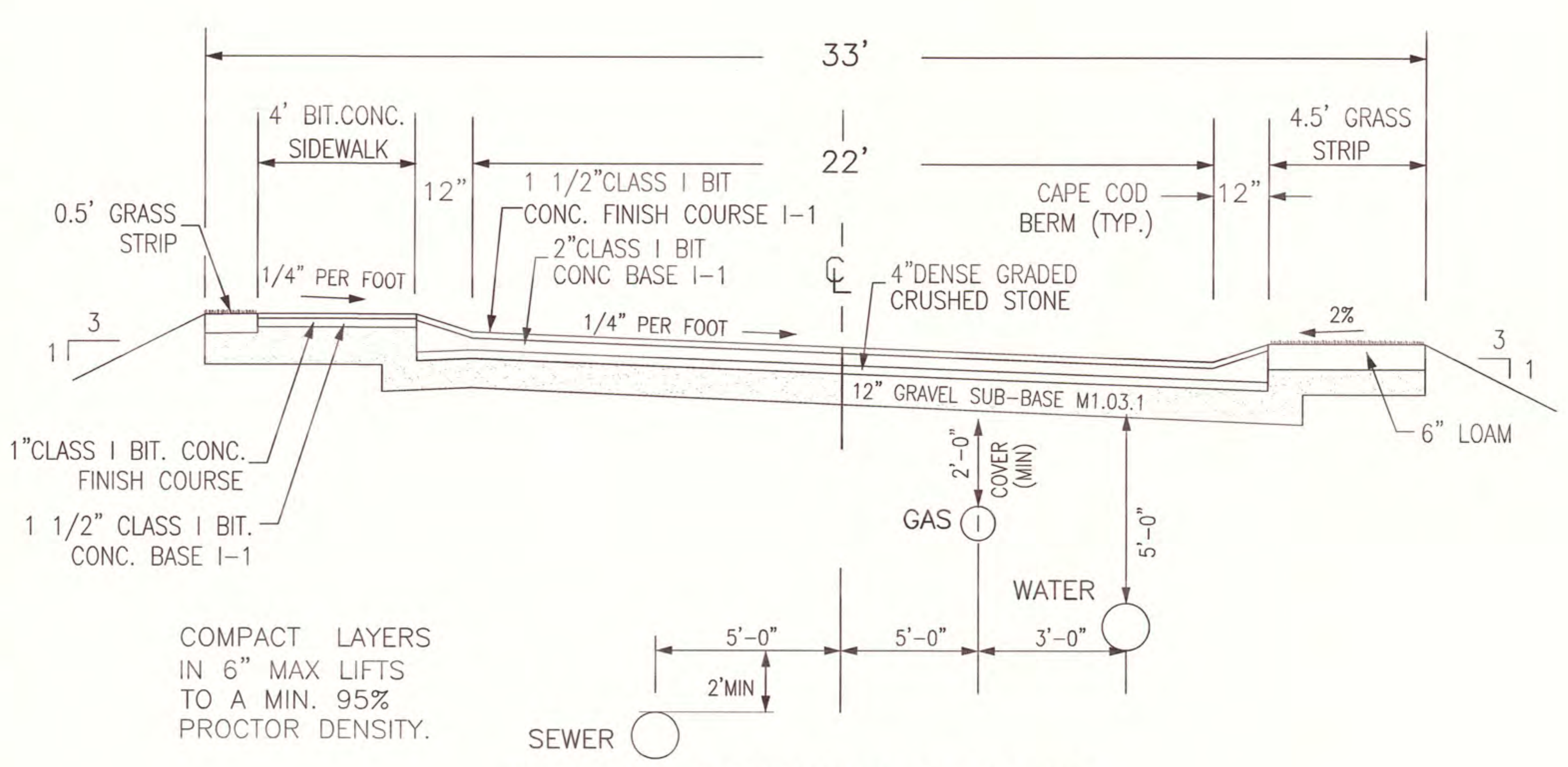

COMPACT LAYERS IN 6" MAX LIFTS TO A MIN. 95% PROCTOR DENSITY.

TYPICAL ROADWAY SECTION

(NOT TO SCALE)

COPYRIGHT © BY GRADY CONSULTING, L.L.C.
NO PART OF THIS DOCUMENT MAY BE REPRODUCED, STORED IN A RETRIEVAL SYSTEM, OR TRANSMITTED IN ANY FORM OR BY ANY MEANS, ELECTRONIC, MECHANICAL, PHOTOCOPYING, RECORDING OR OTHERWISE, WITHOUT THE EXPRESS WRITTEN CONSENT OF GRADY CONSULTING, L.L.C. WITH THE EXCEPTION OF ANY REGULATORY AUTHORITY WHICH MAY REPRODUCE IT IN CONJUNCTION WITH THE PERFORMANCE OF OFFICIAL BUSINESS UNDER ITS JURISDICTION. ANY MODIFICATIONS MADE TO THIS DOCUMENT WITHOUT THE EXPRESS WRITTEN CONSENT OF GRADY CONSULTING, L.L.C. SHALL RENDER IT UNUSABLE.

J:\2015\15-110\DWG\2016-04-05 Concept - Turn around - 100 ft lots.dwg, 5/17/2016 3:29:18 PM

COMMONWEALTH OF MASSACHUSETTS
DARREN M. GRADY
CIVIL
No. 40715
REGISTERED PROFESSIONAL ENGINEER

REVISIONS	
11/16/15	SIDEWALK AND ASSESSORS MBLU
1/14/16	REVIEW COMMENTS
3/5/16	REVIEW COMMENTS
5/16/16	HOLLISTON ST TURN AROUND

DEFINITIVE SUBDIVISION PLAN

HOLLISTON STREET and FOREST AVENUE
QUINCY, MASSACHUSETTS

PREPARED FOR:
THE MILTON CORPORATION
1094 BLUE HILL AVENUE
MILTON, MA 02186

SEPTEMBER 24, 2015
SCALE: 1"=20'
JOB No. 15-110

GRADY CONSULTING, L.L.C.
Civil Engineers and Land Surveyors
71 Evergreen Street, Suite 1, Kingston, MA 02364
Phone (781) 585-2300 Fax (781) 585-2378

(DETAILS)