Town Brook Base Flow Recapture Report

Centre Street
Quincy, Massachusetts

Prepared for:
City of Quincy
1305 Hancock Street
Quincy, Massachusetts 02169

Submitted: April 17, 2013

Project Number: 16120008

Prepared By:

EBI Consulting
environmental | engineering | due diligence

21 B Street
Burlington, MA 01803
Tel: (781) 273-2500
Fax: (781) 273-3311
www.ebiconsulting.com

In Association with:

Lucas Environmental, LLC
67 Coddington Street, Suite 204
Quincy, MA 02169

TABLE OF CONTENTS

1 INTRODUCTION 3

2 PROJECT BACKGROUND 5

2.1 Town Brook Watershed Overview 5
2.2 Previous Studies, Reports and Actions 6
Town Brook Enhancement Project 7
Preliminary Design of Flow Restoration in Town Brook 8
Memorandum of Agreement and Site Inspection Report 9
Town Brook Base Flow Recapture Alternatives Report 10
Town Brook Interim Flow Augmentation Protocol 11
2.3 Resource Area Due Diligence Assessment 12

3 PROPOSED IMPROVEMENTS 17

3.1 Crown Colony Stormwater Detention Basin 19
3.2 Crown Colony Drive / Centre Street Drainage System 22
3.3 Town Brook Open Channel Reach 27

4 CONCLUSION 31

4.1 Selected Base Flow Recapture Improvements 31
Crown Colony Stormwater Detention Basin 31
Crown Colony Drive / Centre Street Drainage System 31
Operations and Management Plan 33
4.2 Conclusion 33

APPENDICES

APPENDIX A

Figures
Figure 1 – Town Brook Drainage Features
Figure 2 – Town Brook Drainage Features Detail

APPENDIX B

Town Brook Base Flow Recapture Improvements Plans
Prepared by EBI Consulting and dated April 17, 2013
- Half Size (11"x17")
- Full Size (22"x34") – Provided Under Separate Cover

APPENDIX C

Technical Documentation
i – Existing Base Flow
ii – Existing Design Flow
iii – Proposed Base Flow
iv – Proposed Design Flow
v – Hydraulic Grade Line Design Flow Drainage Profiles
vi – Existing Trough Base Flow Calculation
vii – Crown Colony Stormwater Outlet Control Structures
viii – Water Quality Unit Technical Documentation

APPENDIX D

Construction Period And Long Term Pollution Prevention Plans

APPENDIX E

Conditions, Certifications and Agreements

i – Final Order of Conditions
ii – Water Quality Certification
iii – Memorandum of Agreement

APPENDIX F (ON CD)

MOA with Site Inspection Report

APPENDIX G (ON CD)

Centre Street Culvert Modifications

i – 1980 Centre Street Culvert Plans
ii – 1982 Centre Street Culvert Repair Details
iii – 1989 Centre Street/Crown Colony Drive Reconstruction Plans
iv – Routes I-93, MA-128 and MA-3 (Quincy/Braintree)
v – Revisions to Centre Street Junction
vi – USACE As-Built Plans (1993)

APPENDIX H (ON CD)

Gomez & Sullivan Report with Appendices A, B, C

APPENDIX I (ON CD)

Town Brook Local Flood Protection

i – Operation and Maintenance Manual Volume I (Excerpt)
ii – Operation and Maintenance Manual Volume II (Excerpt)

APPENDIX J (ON CD)

Braintree/Quincy Low Flow Protocol

APPENDIX K (ON CD)

Town Brook Enhancement Project Division of Marine Fisheries Comment Letter

APPENDIX L (ON CD)

Crown Colony Subdivision Plans (Excerpt)

APPENDIX M (ON CD)

USGS GAGE #01105585 DATA

APPENDIX N (ON CD)

Existing Conditions Plans

APPENDIX O (ON CD)

Town Brook Interim Flow Augmentation Protocol

APPENDIX P (ON CD)

Town Brook Base Flow Recapture Alternatives Report Comment Letters

i – Mass. Division of Marine Fisheries (DMF) received via email dated February 15, 2013
ii – Department of Conservation and Recreation (DCR) received via letter dated February 5, 2013
iii – Mass. Department of Environmental Protection received via letter dated February 25, 2013

1 INTRODUCTION

This Town Brook Base Flow Recapture Report (the "Report") has been prepared to identify design modifications and maintenance measures that will augment base flows to Town Brook without impacting flood protection, maintenance and operational concerns with respect to the federally constructed Town Brook Local Protection Project (the "Flood Control Project"). Flow augmentation will assist in returning base flows to levels that historically sustained a healthy rainbow smelt spawning habitat within downstream reaches of Town Brook. These modifications, as previously outlined in the Town Brook Base Flow Recapture Alternatives Report (the "Alternatives Report") dated January 14, 2013, have been reviewed and the selected alternatives have been approved for advancement to final design and permitting by the Massachusetts Department of Environmental Protection (MassDEP), the Department of Conservation and Recreation (DCR) and the Massachusetts Division of Marine Fisheries (DMF).

The Report has been prepared in accordance with the Memorandum of Agreement (MOA) for the Recapture of Base Stream Flows within Town Brook entered into by the City of Quincy (the "City"), joined by DCR, DMF and Street-Works Development LLC, as well as the Final Order of Conditions (FOC) and Water Quality Certification (WQC) for the Town Brook Enhancement Project (MassDEP File No. 59-1261). As noted in the MOA, included as Appendix E, the City is required to investigate, analyze and pursue certain improvements within the Town Brook watershed in efforts to recapture base flows within Town Brook as described below:

> *"The City, subject to coordination and approval by DCR and [United States Army Corps of Engineers], as applicable, shall undertake the monitoring of low flows, any necessary survey work to document existing conditions, initial design, and if such monitoring and design indicate-it to be feasible, the City shall, in accordance with Special Condition #38 of the FOC, undertake the final design, obtain any necessary property rights/ permits and construct modifications at both Crown Colony Meadow and the Centre Street Junction Structure as identified in the Site Inspection Report, in order to recapture substantially all of the base flows that are currently diverted away from Town Brook at these locations, provided any such modifications can be demonstrated to have no material adverse impact on flood control."*

As noted in the MOA, modifications are proposed to the Crown Colony Stormwater Detention Basin and within the Centre Street drainage systems (the "Proposed Improvements") and are detailed in this Report, including a complete analysis and description of the Proposed Improvements.

[THIS PAGE INTENTIONALLY LEFT BLANK]

2 PROJECT BACKGROUND

2.1 TOWN BROOK WATERSHED OVERVIEW

Town Brook is a perennial stream which originates in Braintree at the Old Quincy Reservoir, adjacent to the South Shore Plaza parking lot. The reservoir and its associated dam were reconstructed by the United States Army Corps of Engineers ("USACE") with outlet control structures regulating discharges into Town Brook. Controlled flow from the Old Quincy Reservoir discharges into Town Brook and flows downstream through Braintree and into Quincy where Town Brook then flows through areas of commercial development, dense residential development, various flow control structures designed to alleviate flooding impacts and then ultimately discharges into the Town River and Town River Bay. A vast majority of Town Brook in Quincy is conveyed through an artificial channel which alternates between open channel and enclosed sections of culverts of varying materials and dimensions. Approximately half of Town Brook is conveyed in the enclosed culvert from the outlet of the Old Quincy Reservoir to Town River Bay. Refer to Figures 1 and 2 included in Appendix A for an overview of the Town Brook Watershed drainage features.

Beginning at the Old Quincy Reservoir, Town Brook flows through a residential neighborhood in a north-easterly direction for approximately 0.7 miles prior to crossing Route 3 in Braintree. Town Brook is conveyed across Route 3 in a culvert and continues in a northerly direction in a combination of open channel and enclosed culverts, where it enters a wetland behind the Home Depot home improvement store referred to as the Town Brook Wetland. At this wetland, base flows enter dual 48-inch culverts and are conveyed along the frontage of the Home Depot to the Centre Street Junction Structure (the "Junction Structure") at the intersection of Crown Colony Drive and Centre Street. The Junction Structure was designed by the USACE as part of the Flood Control Project designed to convey base flows in Town Brook, while diverting peak storm event flows from Town Brook, thereby reducing flooding to downstream properties historically prone to flooding.

During site visits on July 23 and July 25, 2012, which are noted in the Site Investigation Report prepared by Stephenson Design Group, dated August 7, 2012, the Town Brook Wetland was investigated as part of an effort to determine potential locations where base flows are being prematurely diverted because it is the first location where base flows could potentially be diverted to the Burgin Parkway drainage system. Base flows were observed at this location, which was designed in conjunction with the Flood Control Project to divert peak stormwater flows to downstream reaches of Town Brook. This wetland has two potential discharge locations identified as the Centre Street Culvert Inlet, tributary to the Burgin Parkway Culvert, and the Town Brook Inlet, tributary to the dual 48-inch Town Brook culverts. Low flows were observed discharging to the Town Brook Inlet, however no low flows were observed being diverted to the Centre Street Culvert Inlet from this same wetland. The routing of base flows entirely to the Town Brook Inlet is likely due to an asphalt berm constructed at the Centre Street Culvert Inlet that directs base flows to Town Brook, while allowing stormwater flows to enter the Burgin Parkway stormwater system.

Base flows from the Town Brook Wetland are conveyed in the dual 48-inch culverts, which enter the Junction Structure from the southeast. Within the Junction Structure, flows are controlled by a steel overflow trough weir where excess flows above the designed capacity overflow into the Centre Street Culvert below. The Centre Street Culvert continues to the north as the Burgin Parkway Culvert along Burgin Parkway.

Design flows that are not diverted to the Centre Street Culvert at the overflow trough continue in Town Brook in an enclosed culvert to the north and daylight as an open channel for approximately 750 linear feet ("Open Channel Segment") prior to re-entering an enclosed culvert at the Lowe's home improvement parking lot generally continuing along the Brook Road for approximately 0.7 miles to the Deep Rock Relief Tunnel intake area.

The design and construction of the Deep Rock Relief Tunnel (the "Tunnel"), a 12-foot diameter concrete lined tunnel approximately 140 to 180 feet below the ground that spans approximately 4,060 feet from the Tunnel Intake at School Street to the tunnel outlet at Town River Bay was a major component of the Flood Control Project. The flow in the Burgin Parkway Culvert, previously diverted from Town Brook, enters the Tunnel intake structure from the south and is conveyed in its entirety to the Tunnel. Flows from Town Brook are subject to diversion at the Tunnel intake, where excess storm event flows within Town Brook are diverted over a lateral overflow weir to the Tunnel, bypassing downstream areas of Quincy. Low flows in Town Brook not diverted to the Tunnel continue across Burgin Parkway and the MBTA railway tracks via an enclosed culvert system prior to daylighting south of Revere Road. Flow continues downstream in alternating open and closed conduit segments until finally discharging to Town River and Town River Bay.

2.2 PREVIOUS STUDIES, REPORTS AND ACTIONS

Historically, Town Brook in Quincy and Braintree has been documented to experience flooding events dating back to 1885. These records include numerous requests, sketches and copies of permits to re-align culverted segments of Town Brook through various parcels. These numerous projects were intended to mitigate flood impacts and optimize land use potential of the properties adjacent to Town Brook. The results of these multiple projects on individual parcels created inconsistent sections of Town Brook within Quincy.

The most significant and comprehensive studies were performed by the USACE and the former Metropolitan District Commission ("MDC"), now the DCR, as part of the Flood Control Project. The USACE and MDC studies analyzed a number of potential projects intended to reduce flooding impacts associated with Town Brook. Based on recommendations included in studies, the USACE and MDC moved forward with the design, permitting and construction of the following Town Brook flood control projects:

- Town Brook Tunnel and Appurtenance Structures (aka "Deep Rock Relief Tunnel")
- Improvements to the Old Quincy Reservoir Dam for Flood Control
- Centre Street Junction Structure
- Burgin Parkway and Centre Street Culverts
- Town River Improvements

Some base flows historically tributary to Town Brook were ultimately diverted into the Deep Rock Relief Tunnel component of the Flood Control Project. This diversion of base flows has resulted in increased channel sedimentation and documented degradation of existing rainbow smelt spawning habitat within downstream reaches of Town Brook. The resulting adverse impacts of the Flood Control Project on this habitat were detailed in various technical reports commissioned by the DMF.

The following additional studies regarding the smelt habitat and flow recapture in Town Brook were performed by the DMF and Gomez and Sullivan Engineers, P.C.. Our review of low flow losses from Town Brook mainly references and utilizes information from the following three (3) reports:

- Chase, B.C. (December 2006). Rainbow smelt (*Osmerus mordax*) spawning habitat on the Gulf of Maine coast of Massachusetts. Mass. Div. of Marine Fisheries Technical Report TR-30. Gloucester, MA.
  http://www.mass.gov/dfwele/dmf/publications/tr30_smelt_spawning_habitat.pdf

- Chase, B.C. (May 2010). Quality Assurance Program Plan (QAPP) for Water Quality Measurements Conducted for Diadromous Fish Habitat Monitoring Version 1.0, 2008-2012. Mass. Div. of Marine Fisheries Technical Report TR-42. New Bedford, MA.
  http://www.mass.gov/dfwele/dmf/publications/tr_42.pdf

- Gomez & Sullivan. (March 2011). Preliminary Design of Flow Restoration in Town Brook, Quincy, MA. Final Report prepared for Mass. Div. of Marine Fisheries.
  http://www.mass.gov/dfwele/dmf/publications/town_brook_final_report.pdf

Additionally, the Town Brook Enhancement Project includes the creation of enhanced smelt spawning habitat that consists of additional daylighting of Town Brook, enhanced spawning substrate in a constructed low flow channel, as well as stormwater quality and conveyance improvements. The Town Brook Enhancement Project includes rerouting of the existing degraded culverted Town Brook that previously conveyed base flows as well as stormwater flows beneath Quincy Center in aged infrastructure consisting of various culvert segments. The realigned Town Brook conveys flows within an enlarged culvert segment, and is further described below.

TOWN BROOK ENHANCEMENT PROJECT

The Town Brook Enhancement Project results in the realignment of approximately 1,700 linear feet of the existing Town Brook within Quincy Center. Base flows in Town Brook have been directed into the realigned channel alignment and are no longer conveyed in the previous alignment through Quincy Center. Town Brook within Quincy Center, prior to the realignment, consisted of a predominantly culverted channel, portions of which is severely degraded with illicit connections and varies widely in size, shape, material and structural integrity. The Town Brook Enhancement Project realigns Town Brook from a connection point upstream of Quincy Center to a point just south of Quincy Center. The new course of Town Brook generally follows the newly constructed Mayor Hannon Parkway to a downstream connection point with the existing Town Brook channel. In this new alignment, the realigned Town Brook comprises a length of approximately 1,200 linear feet, consisting of enlarged culverted segments as well as enhanced open channel segments.

The Town Brook Enhancement Project improves flood control throughout the Quincy Center area by increasing the hydraulic capacity of Town Brook with a uniform section of enlarged culvert, as well as providing enhanced habitat for smelt and wetlands. The project provides a natural bottom channel with an integral low flow channel to convey base flow through the downstream portions of the project area. The low flow channel has been designed to specific DMF design requirements to achieve attraction velocities for smelt during low flow and includes resting pools designed to allow rainbow smelt to congregate during spawning events along the proposed low flow channel. A secured spawning substrate

is also included as part of the low flow channel to enhance the smelt spawning habitat. As directed by DMF, the low flow spawning channel has been designed to maintain a velocity range of 1.6 to 3.2 feet per second (ft/sec) with a depth of 0.5 to 1.0 feet for the mean daily discharge for April of 7 cubic feet per second (cfs). In addition to this average low flow design target, the low flow channel has been designed to achieve the target velocity and depth requirements for 3-5 cfs within the lower six inches and an additional 3-5 cfs in the upper six inches, for a total base flow range from 3-10 cfs, for the low flow channel. Refer to Appendix K for a copy of the comment letter from DMF where this base flow design target is noted.

The natural bottom channel includes a geogrid mat that incorporates soil with vegetative planting which is stabilized though reinforcing root zones and directing flows over the top cells, thereby increasing the shear resistance of the fill. The geogrid mat also stabilizes the smaller diameter stone preferred by smelt for spawning, which might otherwise be carried downstream by stormwater events without the use of the geogrid mat reinforcement. An impermeable membrane is included beneath the surface of the natural bottom channel sections to prevent loss of low base flows to infiltration, potentially negatively impacting smelt habitat. The walls of the open channel sections are comprised of reinforced concrete retaining walls with a natural finish to replicate the look and feel of the existing surrounding improvements. The project results in improved hydraulic conveyance of storm events in Town Brook and improved flow conditions during base flow conditions through the project area by the creation of the low flow channel and extending the smelt spawning habitat.

A Final Order of Conditions (MassDEP # 059-1261) for the Town Brook Enhancement Project was issued on May 30, 2012, and a Water Quality Certification was issued on August 31, 2012 by MassDEP allowing the City to undertake the work in connection with this project, which is currently under construction. Construction of the channel was substantially complete in early March 2013, allowing base flows to be redirected into the realigned channel, prior to the 2013 smelt spawning season identified as March 1 through May 31. Monitoring of associated improvements as it relates to the smelt spawning habitat has commenced and will continue to be performed as required by the Water Quality Certification and the Final Order of Conditions. Construction of certain components of the Town Brook Enhancement Project outside of the resource areas will continue to be advanced with full completion anticipated in summer of 2013. Refer to Appendix E for the Final Order of Conditions for the Town Brook Enhancement Project and the Water Quality Certification and associated Special Conditions.

PRELIMINARY DESIGN OF FLOW RESTORATION IN TOWN BROOK

A study of possible methods to recapture diverted base flows in Town Brook was provided in the Preliminary Design of Flow Restoration in Town Brook, Quincy, MA prepared by Gomez and Sullivan Engineers, P.C. in March 2011 for the DMF (the "Preliminary Design Report"). The Preliminary Design Report identifies two principal sources of the diversion of base flows resulting from the construction of the Centre Street Culvert which can be attributed to chronic losses from the Crown Colony area, and the Centre Street Junction Structure that diverts stormwater flows over a trough weir into the Centre Street Culvert below. Diverted base flows from both sources were found to then bypass downstream smelt spawning habitat within the Town Brook and, instead, drain into the Burgin Parkway culvert, ultimately emptying into the Deep Rock Relief Tunnel at the Tunnel Intake area ("Tunnel Intake").

The Preliminary Design Report suggests that structural work could potentially be undertaken at the Tunnel Intake area as well as at the Centre Street Junction Structure to augment the existing base flows

within Town Brook and offers 4 (four) preliminary conceptual alternative designs that could be implemented at these two locations. Some of these alternatives rely on pumps, introduction and implementation of new automated equipment, introduction and implementation of new manually operated flood control components and/or other devices that require long-term maintenance and substantial capital costs for replacement. Refer to Appendix H for the Preliminary Design Report.

MEMORANDUM OF AGREEMENT AND SITE INSPECTION REPORT

The Memorandum of Agreement (MOA) was entered into by the City, and joined by the DCR, DMF, and Street-Works Development LLC for the Recapture of Base Stream Flows within Town Brook. As agreed upon in the MOA, the City is required to investigate, analyze and pursue certain improvements within the Town Brook watershed in efforts to recapture base flows within Town Brook.

In support of the MOA, a Site Inspection Report was prepared in order to identify specific conditions within Town Brook that might be contributing the diversion of base flows from Town Brook into the Flood Control Project stormwater system. The Site Inspection Report also provided supplemental information on the continued research, investigations, preliminary analysis and ongoing coordination of the base flow recapture efforts to restore base flows within Town Brook. Refer to Appendix F for a copy of the MOA and Site Inspection Report.

Staff from EBI Consulting (formerly Stephenson Design Group, LLC), in conjunction with the DCR, City of Quincy and MassDEP, undertook a site inspection on July 25, 2012 to research and identify the locations where base flows are being diverted from Town Brook. As part of this site inspection potential alternatives for restoring low flow in Town Brook were reviewed, as well as the preliminary conceptual alternative solutions presented in the Preliminary Design Report prepared by Gomez & Sullivan Engineers, P.C. In preparation of the July 25th site inspection, a preliminary site visit was performed with representatives from DCR on July 23, 2012.

The Site Inspection Report identified three locations where base flows are currently being diverted or impeded from entering Town Brook and with the implementation of design modifications and effective maintenance could result in the recapture of lost flows. Based upon initial investigation, potential modifications and/or maintenance in these locations for the recapture of base flows to Town Brook appeared feasible without the need for significant structural modifications to the Flood Control Project structures that might otherwise present flooding, structural maintenance or operational concerns. The locations identified in the Site Inspection Report were:

1. The Constructed Stormwater Basin ("Crown Colony Stormwater Meadow"), constructed as part of the Crown Colony Office Park in the late 1980s/early 1990s;

2. The Centre Street Junction Structure, constructed as part of the Centre Street Culvert in 1984, as most recently modified in 1999; and

3. The Open Channel Segment of Town Brook immediately downstream of the Centre Street Junction Structure

As documented in the Site Inspection Report, at locations 1 and 2 identified above, low flows were observed within culverts discharging to the Burgin Parkway stormwater system (flows which are therefore bypassing Town Brook). In addition to proposed modifications at locations 1 and 2, adhering to an

ongoing sediment management plan in the Open Channel Segment of Town Brook downstream of the Junction Structure, as well as within the structures themselves, was determined to likely help eliminate dry weather flow losses experienced at the overflow weir within the Junction Structure. Although flow rates attributable to these diverted flows were not quantified, the presence of flows within these various reaches of the stormwater system bypassing Town Brook was strongly indicative that these diverted flows could be recaptured within Town Brook restoring base flow levels in Town Brook.

TOWN BROOK BASE FLOW RECAPTURE ALTERNATIVES REPORT

The purpose of the Alternatives Report, as required by the MOA, was to identify and evaluate possible alternative design modifications and other potential measures that could augment base flows to Town Brook without a material adverse impact to flood control as well as maintenance and operational concerns with respect to the Town Brook Local Protection Project. Multiple design modifications were evaluated as part of the Alternatives Report, including modifications at the Centre Street Culvert in the vicinity of the Centre Street Junction Structure and Crown Colony Outlet Control Structures, as well as proposed modifications and maintenance measures in the open channel reach of Town Brook downstream of the Junction Structure.

Comment letters were issued by MassDEP, DCR and DMF identifying the following improvements to be advanced to final design and permitting:

1. *Modification of the invert elevation of Crown Colony OCS-2 and localized regrading of the Stormwater Meadow detention basin coupled with construction of a small berm at OCS-1;*
2. *Construction of a diversion structure upstream of the Junction Structure;*
3. *Installation of a permanent access manhole at the confluence of the new box culvert and the existing Town Brook culvert to provide easier access for removal of accumulated sediments; and*
4. *Placement of a permanent mark at the outlet of the 72-inch culvert to help identify when premature diversions may be occurring.*

In addition to the improvements noted above, both MassDEP and DCR have suggested implementing a means to control sediment accumulation in Town Brook, which has proven to be a contributing factor in the premature diversions of base flows. The City concurs that maintenance of these structures is key to the long term success of the base flow recapture efforts, and as such, the City intends to install two water quality units to provide stormwater runoff treatment of flows entering the Junction Structure. Modifications to the existing metal trough and the installation of an inline grit basin within Town Brook were analyzed as part of the Alternatives Report but were not found to be warranted at this time, and are not included as part of the Proposed Improvements. Refer to Appendix P for comments received in response to the Alternatives Report

TOWN BROOK INTERIM FLOW AUGMENTATION PROTOCOL

In accordance with the MOA for the Recapture of Base Stream Flows within Town Brook, the City submitted the Town Brook Interim Flow Augmentation Protocol (the "Interim Protocol") in order to temporarily raise base flows within Town Brook during the 2013 smelt spawning season. As noted in the MOA, the City is required to investigate, analyze and pursue certain improvements within the Town Brook watershed in efforts to recapture base flows within Town Brook, however due to design, permitting and public bidding considerations, the proposed design modifications being evaluated were not completed in advance of the Spring 2013 smelt spawning season identified as March 1 – May 31 ("2013 Season"). Accordingly as described in the MOA;

> *"…the City shall develop, for approval by DCR, DEP, DMF and, as applicable, the USACE, an interim flow augmentation protocol (the "Interim Protocol") in order to temporarily raise base flows within Town Brook during the Spring 2013 period of smelt spawning. The Interim Protocol shall detail temporary measures that may include (a) releases from the Quincy Reservoir Dam, in coordination with the Town of Braintree and other necessary parties, that may require temporary modification to the so-called "low flow protocol" as set forth in the Operation and Maintenance Manual of the Town Brook Local Protection Project; (b) installation of temporary pumps at key locations to recapture otherwise diverted base flows and pump these flows into Town Brook; (c) pre/post survey of conditions in connection with the sediment removal activities prescribed by section IV.A.2., above; and/or (d) other measures that may be reasonably anticipated to augment the base flows to the newly-constructed smelt habitat in Town Brook during the 2013 Season. The Interim Protocol shall detail the means, methods and procedures required to implement these measures, which shall be submitted to DEP, DCR and DMF for approval…"*

The Interim Protocol dated January 4, 2013 was submitted to DCR, DMF and MassDEP for review and approval. Based on agency comments, a revised Interim Protocol dated February 4, 2013 was reviewed and approved for implementation for the 2013 Season. The maintenance measures included as part of the Interim Protocol were completed prior to the 2013 Season and a temporary pump was installed to augment flows within Town Brook during the 2013 Season, as needed.. The maintenance measures consisted of removing over 1,400 tons of accumulated sediment within the Junction Structure and the Open Channel Segment. Refer to Appendix O for the Interim Protocol. The Open Channel Segment was re-surveyed following completion of the Interim Protocol, and the revised profile is included in the Plans for reference. Multiple site investigations have been completed following the completion of the Interim Protocol as well as regular monitoring of the USGS Gauge at Miller Stile Road. The site investigations and gauge readings revealed that the Interim Protocol measures have been effective in maintaining the necessary flows needed to sustain the smelt habitat during the 2013 Season to date. In the event that the base flows fall below 2 cfs as measured at the USGS Gauge, the City will be notified, triggering an investigation into possible causes of the low base flows by the City Department of Public Works. In the event of low base flows, the Braintree/Quincy Low Flow Protocol may have to be activated to provide flow augmentation from the Old Quincy Reservoir. Refer to Appendix J for the Braintree/Quincy Low Flow Protocol.

2.3 RESOURCE AREA DUE DILIGENCE ASSESSMENT

A Professional Wetland Scientist (PWS) from Lucas Environmental, LLC conducted site investigations near the Junction Structure on November 28, 2012 and December 29, 2012. The wetland investigation was performed in accordance with the Massachusetts Department of Environmental Protection Division of Wetlands and Waterways Handbook for Delineating Bordering Vegetated Wetlands under the Massachusetts Wetlands Protection Act (1995), the U.S. Army Corps of Engineers (USACE) Wetland Delineation Manual (1987), and Northeast and Northcentral Regional Supplement v. 2.0 (2012).

Lucas Environmental also conducted an extensive review of available data and records to examine the potential local, state, and federally jurisdictional areas associated with proposed work for the Town Brook Base Flow Recapture Improvements. The area north of Crown Colony Drive near Centre Street, the BJ's Wholesale Club parcel, the Home Depot parcel near Thomas E. Burgin Parkway, the Lowe's Home Improvement parcel, and the Penn Street parcel were examined for wetland resource areas. A summary of the results of the resource area investigations located adjacent to the proposed improvements is described below.

Lowe's Home Improvement/Penn Street Parcels

Town Brook and associated Bordering Vegetated Wetlands (BVW) are located adjacent to the Lowe's Home Improvement and Penn Street parcels. The areas were previously delineated and have been identified on the project plans recently reviewed with the Quincy Conservation Commission for the Penn Street development. The limits of the Riverfront Area and the 100-Foot Buffer Zone to Bank and BVW were identified based upon this delineation.

The Riverfront Area extends 200 feet from Town Brook, however the Junction Structure is not located within the limits of this resource. Previous plans reviewed by the Conservation Commission for other development projects in the area have identified Riverfront Area in Centre Street, however, under the Wetlands Protection Act, *where a river runs through a culvert more than 200 feet in length, the riverfront area stops at a perpendicular line at the upstream end of the culvert and resumes at the* downstream end. Therefore, the Riverfront Area would not extend into Centre Street.

The limit of Town Brook based upon the Mean Annual High Water (MAHW)/Ordinary High Water (OHW) line is identified on the Site Plans, which also is the limit of Bank. The BVW along the open channel reach is also identified on the Site Plans. A 100-Foot Buffer Zone extends from the limit of the Bank/BVW and the 200-Foot Riverfront Area extends from the limit of the Bank. The regulated areas subject to local, state, and federal jurisdiction are identified on the Site Plans.

Crown Colony Drive

The area north of Crown Colony Drive, directly across from the BJ's Wholesale Club was examined for wetland resources. The area consists of three large constructed basins associated with the Crown Colony Place development. The northern most basin is a large retention pond that connects to two other large basins. The eastern basin is inundated and consists primarily of broadleaf cattail (*Typha latifolia*) with a fringe along the basin slopes. The southern basin borders on Crown Colony Drive and contains steep slopes. The vegetation in the basin is dominated by common reed (*Phragmites australis*) with broadleaf

cattail, Japanese knotweed (*Polygonum cuspidatum*), staghorn sumac (*Rhus typhina*), Oriental bittersweet (*Celastrus orbiculatus*), multiflora rose (*Rosa multiflora*), poison ivy (*Toxicodendron radicans*), and *Rubus* spp. present along the slopes and at the toe of slope.

Two large outlet control structures are located in the southern basin, one at each corner near Crown Colony Drive. The eastern structure conveys flows to the Junction Structure. The western structure conveys water behind the BJ's through a culvert and open drainage ditch and eventually into the Burgin Culvert. Discussions between Lucas Environmental and James Iorio of the Quincy Conservation Commission have indicated that the three basins were created as stormwater detention/retention basins to reduce flooding in the adjacent residential neighborhoods and detain stormwater from the Crown Colony Place development.

Based upon review of available documents and discussions with James Iorio of the Quincy Conservation Commission, it is Lucas Environmental's professional opinion that the constructed basin ("Crown Colony Stormwater Detention Basin") would not constitute a local, state, or federally regulated resource area as it was designed as a stormwater basins to reduce flooding in adjacent neighborhoods.

BJ's Wholesale Club

The BJ's Wholesale Club parcel was also examined for resource areas. An open drainage ditch is located at the back of the site. The vegetation along the slopes of the drainage ditch consists of tree-of-heaven (*Ailanthus altissima*), staghorn sumac, black cherry (*Prunus serotina*), gray birch (*Betula populifolia*), glossy buckthorn (*Franula alnus*), honeysuckle (*Lonicera* spp.), Oriental bittersweet, and *Rubus* spp. The vegetation within and along the toe of slope consists of common elderberry (*Sambucus canadensis*), quaking aspen (*Populus tremuloides*), sensitive fern (*Onoclea sensibilis*), glossy buckthorn, honeysuckle, and willow (*Salix* spp.).

The channel is approximately eight to ten feet wide, with the channel bottom approximately three to six feet wide. Water was flowing at the time of the site visits with average depths of six inches to two feet. The channel edge near the existing BJ's Wholesale Club is lined with rock riprap with vegetation growing throughout.

The Quincy Conservation Commission previously reviewed this site. According to the Notice of Intent for the BJ's Wholesale Club, the site is also subject to storm drainage directed toward Town Brook form the Crown Colony office development located west of the site. As noted in the Notice of Intent:

> *A series of detention basins controls the runoff from this development and one of the discharge points conveys storm drainage in a culvert that runs under the southern portion of the BJ's site. A short section of this storm drainage is day-lighted in an open stormwater drainage channel in the southern portion of the BJ's site: this is the only surface water feature on the site. This channel segment (as well as the entire storm drain system) does not conform to the definition of intermittent stream (310 CMR 10.04) with confining Banks (310 CMR 10.54) because it is upgradient of all vegetated wetland resource areas. This storm drainage system drains easterly through the site, and connects with the [Centre Street] flood culvert as described above. Accordingly, the flows from this storm drain system do not enter the low flow open channel portion of Town Brook, but rather are conveyed within the flood water culvert system that by-passes the low flow open channel of Town Brook.*

Therefore, the drainage ditch on the site is non-regulatory, although the floodplain is confined within this ditch. Lucas Environmental is in agreement with this assessment, which further supports the Crown Colony stormwater basins evaluation.

Furthermore, the stormwater from the BJ's Wholesale Club site is being discharged to the Centre Street storm drainage system bypassing Town Brook.

The Home Depot

A wetland swale is located on the Home Depot parcel along the edge of the parking lot near the Burgin Parkway access ramps. The swale is well defined and is approximately two to three feet wide where it begins. Standing water was present in the swale during the site investigation, approximately six inches to two feet deep. The vegetation along the fringe of the swale consists of eastern cottonwood (*Populus deltoides*), gray birch, American elm (*Ulmus americana*), staghorn sumac, dogwood (*Cornus* spp.), multiflora rose, common reed, and Oriental bittersweet. The swale vegetation was dominated by common reed.

The wetland is regulated under local, state, and federal jurisdiction. A 100-Foot Buffer Zone extends from the limit of the wetland under local and state regulation. The area was not delineated due to the original project location greater than 100 feet from this swale. An approximate 100-Foot Buffer Zone has been identified on the Site Plans for reference purposes.

Bordering Land Subject To Flooding

According to the Federal Emergency Management Association (FEMA) Flood Insurance Rate Map for the City of Quincy, Map Number 25021C0207E, dated July 17, 2012, the work area is located in Zone AE, which is classified as an area determined to be in the 1% annual chance floodplain (100-year flood) where base flood elevations have been determined. The flood elevation within the work area is 33.0 feet (NAVD 1988) or 39.6 feet (City of Quincy Datum). Therefore the site is located within the identified FEMA 100-year floodplain and Bordering Land Subject to Flooding.

According to the Penn Street Notice of Intent, *as part of the design and permitting efforts for the Lowe's project, Tetra Tech conducted an assessment of the floodplain associated with Town Brook in the vicinity of the Lowe's site to determine the influence of flood control improvements that have been implemented since 1980. The results were documented in Proposed Lowe's of Quincy, Flood Plain Assessment, Quincy, Massachusetts, dated September 25, 2007, and were provided to the City of Quincy and MA DEP as part of the Drainage Report submitted as part of the Lowe's of Quincy Notice of Intent*. Lucas Environmental was not able to obtain a copy of this Flood Plain Assessment.

Furthermore, *as part of the permitting process, MA DEP requested that Lowes' amend the flood elevation with FEMA. FEMA indicated that it was the responsibility of the local and/or state authorities to update the flood profiles for Town Brook and that a flood profile could not be amended for a single parcel. However, FEMA also confirmed that Tetra Tech's assessment and methodology for determining the flood elevation was consistent with their standards and MassDEP accepted the 100-year flood elevation determination at elevation 28.8 feet (NAVD) or 35.4 feet (City of Quincy Datum) for the Lowe's site*.

The Base Flow Recapture work area will be located within the limits of the FEMA mapped floodplain in Centre Street, however is outside of the Lowe's/Penn Street approved Flood Plan elevations. Although work is proposed within the FEMA approved 100-year floodplain and the regulated resource area Bordering Land Subject to Flooding, all work is proposed below grade, and no grading changes are proposed that would impact the flood storage in this area.

Critical Areas

A review of the current Mass GIS data layer for the Massachusetts Natural Heritage Atlas (effective October 1, 2008) under the Natural Heritage and Endangered Species Program (NHESP) indicates that the site is not located within Estimated Habitat for Rare Wildlife or Priority Habitat for Rare Species. No certified vernal pools under the jurisdiction of the Wetlands Protection Act (310 CMR 10.00) or the Massachusetts Endangered Species Act (321 CMR 10.00) occur in the area. The site is not located within any Wellhead Protection Areas, Outstanding Resource Waters (ORW), or Areas of Critical Environmental Concern (ACEC).

[THIS PAGE INTENTIONALLY LEFT BLANK]

3 PROPOSED IMPROVEMENTS

The Proposed Improvements in this Report originated from evaluations of certain modifications previously identified in the Site Inspection Report, the Preliminary Design Report, the Alternatives Report, which have the potential to reduce the historic diversion of base flows from Town Brook. This section will provide supplemental information on the advanced research, investigations, analysis, ongoing coordination and proposed improvements for the base flow recapture efforts. Refer to Appendix B for plans of the proposed improvements, Appendix D for the construction period and long term pollution prevention plans and Appendix N for existing conditions plans.

Flow Recapture Goal

The Preliminary Design Report states a goal for the flow recapture to be in the range of 3-8 cfs based on the decrease of the average of mean monthly flows for the annual spawning season following the completion of the Flood Control Project in 1998 as measured at USGS Gage #01105585 in Town Brook near Miller Stile road. The Flood Control Project was specifically designed to reduce stormwater flows from reaching the downstream reaches of Town Brook, therefore a reduction in mean flows would be expected following the completion of the Flood Control project.

Based on the same data set and analyses conducted by the DMF and presented in Table 2.2-2 of the Preliminary Design Report, the average of *minimum* flows within the spawning season prior to the construction of the Flood Control Project was in the range of 5.2-6.8 cfs, and following the completion of the Flood Control Project fell to 2.7-3.3 cfs. Refer to the table included on the following page for reference. This represents a reduction of approximately 2.5-3.5 cfs of measured average minimum flows following the completion of the Flood Control Project. It would seem that the average of minimum flows is more closely related to base flows, whereas the average of mean flows includes storm event flows which will naturally skew the measured "lost" flow rates upward. For this reason we expect that the limit of base flows that can potentially be recaptured will likely be in the range of 2.5-3.5 cfs, consistent with the reduction of average of minimum flows during the spawning season.

Although the expected recaptured flow is expected to be in the range of 2.5-3.5 cfs, the various proposed modifications have been analyzed and designed according to the base flow goals as previously expressed by DMF. As noted in a DMF comment letter for the Town Brook Enhancement Project Notice of Intent, the target design flow rate for downstream reaches of Town Brook was 7 cfs, with an upper limit of 10 cfs. Refer to the DMF comment letter included as Appendix K. Additional assumptions and design criteria for each alternative presented are further described and detailed below.

Site Investigations

Site investigations were performed by EBI Staff (formerly Stephenson Design Group) accompanied by representatives of the City, MassDEP and DCR on July 23 and July 25, 2012 as part of the Site Investigation Report prepared in support of the MOA. During these investigations, flows were observed discharging from the Crown Colony Stormwater Detention Basin through two outlet control structures. The overflow trough at the Junction Structure was diverting flow from Town Brook into the Burgin Parkway Culvert below, and flow in the open channel segment of Town Brook was moving slowly. The Town Brook wetland behind Home Depot was directing base flow into Town Brook and the inlet to the Centre Street Culvert was dry, indicating no base flows were being diverted.

Table 2.2-2 – Comparison of pre- and post-flood-control-project monthly flow statistics

	Year	March				April				May			
		Min.	*Max.*	*Mean*	*Rain*	*Min.*	*Max.*	*Mean*	*Rain*	*Min.*	*Max.*	*Mean*	*Rain*
Pre- Flood Control Project	1973	4.2	13.0	6.1	-1.70	2.9	37.0	12.5	2.09	2.8	27.0	9.2	0.53
	1974	4.4	77.0	14.5	0.11	7.4	45.0	15.0	0.40	4.9	16.0	7.0	-0.36
	1975	6.0	32.0	9.8	-1.16	3.6	58.0	9.4	-1.16	3.6	43.0	9.1	-1.45
	1976	4.7	16.0	8.3	-1.48	1.7	20.0	5.5	-1.56	3.4	24.0	5.3	-1.25
	1977	12.0	57.0	19.0	0.86	1.3	40.0	8.1	0.51	1.1	52.0	7.5	0.29
	1978	2.2	55.0	16.5	-1.44	3.2	23.0	7.5	-1.77	2.8	55.0	11.5	1.27
	1979	8.7	60.0	18.6	-0.87	2.4	32.0	6.7	-0.37	1.3	31.0	7.6	1.01
	1980	1.5	37.0	8.2	1.47	4.5	66.0	11.6	0.80	1.6	9.4	4.3	-0.93
	1981	2.4	20.0	9.4	-3.28	2.4	15.0	5.6	-0.42	2.0	13.0	5.1	-2.06
	1982	5.5	12.0	7.7	-1.73	5.4	30.0	14.0	-0.14	2.6	11.0	5.9	-0.65
	1983	15.0	124.0	33.8	5.82	13.0	87.0	26.5	3.30	2.1	24.0	11.2	-0.29
	1984	10.0	120.0	27.4	2.92	14.0	61.0	24.9	0.87	8.6	120.0	18.9	5.54
	1985	2.9	24.0	8.1	-1.63	2.9	15.0	4.9	-1.94	2.4	31.0	5.6	0.13
	1986	3.9	28.0	8.5	-0.48	3.6	12.0	6.4	-1.97	2.0	9.1	4.7	-1.92
	1987	-	-	-	-	-	-	-	-	-	-	-	-
	1988	10.0	55.0	21.8	-0.38	8.5	31.0	15.7	-2.09	7.2	39.0	12.7	-0.37
	1989	-	-	-	-	-	-	-	-	-	-	-	-
	1990	13.0	32.0	16.7	-2.19	12.0	81.0	24.6	2.38	16.0	56.0	26.1	3.30
	1991	-	-	-	-	-	-	-	-	13.0	24.0	15.7	-2.31
	1992	9.4	40.0	17.4	-0.31	15.0	36.0	18.6	-1.22	14.0	25.0	15.6	-1.83
	1993	6.5	71.0	18.4	3.77	12.0	81.0	24.4	1.30	5.6	21.0	14.1	-2.19
	1994	8.2	107.0	23.1	3.59	10.0	20.0	12.6	-1.31	8.6	37.0	12.2	2.12
	1995	9.3	31.0	13.1	-1.70	3.7	19.0	7.9	-2.16	2.3	12.0	4.0	-1.41
	1996	4.3	19.0	10.0	-1.54	3.8	60.0	14.7	0.81	9.0	23.0	13.1	-0.50
	1997	4.6	30.0	8.6	0.78	0.8	35.0	15.6	-0.10	2.9	15.0	6.8	-0.60
Post- Flood Control Project	1998	0.9	51.0	5.6	0.25	1.2	14.0	7.0	0.02	4.6	58.0	12.6	3.61
	1999	7.6	17.0	10.3	0.67	2.4	7.7	5.1	-2.73	2.2	21.0	5.3	-0.53
	2000	4.5	26.0	8.9	-0.31	4.1	25.0	7.7	1.46	3.6	17.0	6.3	-0.35
	2001	2.7	63.0	13.7	3.67	1.9	13.0	6.1	-2.68	1.8	10.0	3.1	-2.00
	2002	2.8	19.0	7.3	-0.38	3.2	24.0	6.7	-0.92	2.7	30.0	8.8	1.25
	2003	4.4	35.0	8.2	0.15	5.1	31.0	9.2	0.40	3.3	27.0	6.4	0.88
	2004	2.4	16.0	4.4	-0.65	4.5	52.0	10.3	5.75	2.5	12.0	4.5	-0.28
	2005	0.4	9.5	1.5	0.04	1.0	17.0	3.3	-0.43	1.3	32.0	5.5	0.74
	2006	3.8	6.1	4.1	-3.29	2.8	9.6	4.1	-1.77	2.2	68.0	13.0	9.24
	2007	3.8	30.0	9.2	0.46	6.4	36.0	12.8	3.11	3.1	24.0	7.1	0.46
	2008	3.5	36.0	7.5	0.82	2.4	19.0	4.5	-0.62	2.8	9.8	3.8	-0.51
Mean	1973-1997	6.8	48.2	14.8	-0.03	6.1	41.1	13.3	-0.17	5.2	31.2	10.1	-0.17
	1998-2008	3.3	28.1	7.3	0.13	3.2	22.6	7.0	0.14	2.7	28.1	6.9	1.14

Town Brook discharge records for 1973-2008 from the USGS Gage No. 01105585 near Miller Stiles Road. Discharge data are in cubic feet per second (cfs) and were provided by the USGS Water Resources Division in Marlboro, MA. Data from 1973-1986 and 1999-2008 are final; data from 1987-1998 are provisional. Rain data represent departure from normal monthly total precipitation in inches at Logan Airport in Boston. Analysis conducted and table provided by the MA DMF.

AVERAGE MINIMUM FLOWS PRIOR TO CONSTRUCTION OF THE FLOOD CONTROL PROJECT

AVERAGE MINIMUM FLOWS FOLLOWING THE CONSTRUCTION OF THE FLOOD CONTROL PROJECT

Notes:

1. The flood control tunnel was constructed in 1997 and began operation in 1998.
2. The series low for minimum flows in March and April resulted in smelt egg kills.
3. Normal monthly total precipitation: March- 4.03 in.; April - 3.82 in.; and May - 3.75 inches.

Table referenced from Preliminary *Design of Base Flow Restoration in Town Brook*, prepared by Gomez & Sullivan, Engineers, P.C., March, 2011.

Site investigations were also performed by EBI Consulting accompanied by representatives of the City on November 27 and December 19, 2012. During these investigations, the overflow trough at the Centre Street Junction Structure was diverting flow from Town Brook into the Burgin Parkway Culvert below and flow in the open channel segment of Town Brook was moving slowly. During the investigation on December 19, flows were observed discharging from the Crown Colony Stormwater Detention Basin through the two Outlet Control Structures, however during the site investigation on November 27 flows were observed discharging only through the westerly Outlet Control Structure, whereas the easterly Outlet Control Structure was inundated in the immediate vicinity, but not conveying flow.

A subsequent site investigation was performed by EBI Consulting on January 3, 2013. During this investigation, flows were observed discharging from the Crown Colony Stormwater Detention Basin through the two Outlet Control Structures, however there was a significant amount of debris accumulated at the outlet of the westerly outlet control structure resulting in approximately 1 foot of pooled water at the 24-inch inlet to the outlet control structure. The overflow trough at the Centre Street Junction was assumed to be diverting flow as rushing water was heard within the structure and the water surface elevation at the outlet of the 72-inch culvert was consistent with the tailwater elevations during the November and December site investigations.

Methodology

The hydraulic network modeling, used to analyze and determine the impacts of the Proposed Improvements, was performed by the Hydrodynamic (i.e. Saint Venant equations) routing methods using the Autodesk® Storm and Sanitary 2012 software. This software models a variety of flow patterns but more specifically tailwater submergence (backwater) effects, reverse flow, flow splits and surcharging. These specific capabilities are critical in the analysis of the proposed modifications to the Crown Colony Drive drainage system, Centre Street Junction Structure and the outlet to the open channel reach. HydroCAD® is stormwater modeling software that provides hydraulic calculations which are based on an extensive reference library of basic and practical hydraulic principles such as the Manning's equation for pipe flow. This software was used to more precisely model the outlet control structures and overflow trough within the Junction Structure as well as to corroborate the results of the hydraulic model. Technical Documentation is provided in Appendix C.

3.1 CROWN COLONY STORMWATER DETENTION BASIN

Existing Conditions

The Crown Colony Stormwater Detention Basin (the "Stormwater Basin") is a constructed stormwater detention basin that is part of the larger overall stormwater management system for the Crown Colony Place development. Flow enters the Stormwater Basin from various sources, including stormwater culverts that hydraulically connect upstream detention basins, as well as a through a connection to an upstream retention basin to the northwest. Two (2) outlet control structures are located at the Stormwater Basin (intersection of Congress Street and Crown Colony Drive) consisting of a concrete vault structure and reinforced concrete pipe (RCP) outlet. Flow enters the vault structures from the Stormwater Basin via either a concrete flared end section with trash rack connecting to a 24-inch orifice within the vault's side wall or overflows the top of the vault's horizontal metal trash rack during large storm events. The Stormwater Basin appears to have a generally uniform cross section without defined channels or flow paths with a gradual gradient sloping generally towards the outlet control structures along the southern boundary.

As previously noted, during the site investigations, flows were observed discharging from the Stormwater Basin through the two outlet control structures. Research of record documents for the Crown Colony stormwater improvements resulted in limited discovery of plans for this area, however excerpts from the planning documents indicative of the initial design of the Project were located and are included in Appendix L for reference. As noted in the Due Diligence review performed by Lucas Environmental, the Crown Colony Stormwater Basin was constructed as a stormwater detention basin, and based upon preliminary review, Lucas Environmental provides the professional opinion that these constructed basins do not constitute regulated resource areas.

Flows from the Crown Colony Stormwater Basin are controlled through two outlet control structures that appear to have been constructed to accept both base and stormwater flows. Outlet control structure (OCS) OCS-1 (southwestern outlet) discharges to a 48-inch culvert along the rear of the newly constructed BJ's Wholesale Club, at the intersection of Centre Street and Crown Colony Drive, which then daylights for a short length prior to re-entering a drainage culvert ultimately discharging to the Centre Street Culvert, bypassing Town Brook. This short length of open channel is identified as a non-jurisdictional drainage ditch in the Stormwater Management Report for BJ's Wholesale Club prepared by R.J. O'Connell & Associates, Inc., dated April 17, 2008, revised September 24, 2008. OCS-2 (southeastern outlet) discharges to a 42-inch culvert that follows the Crown Colony Drive alignment that ultimately discharges into the Burgin Parkway Culvert, bypassing Town Brook.

The invert elevation of the Flared End Section (FES) inlet to OCS-1 (elevation 34.75) is approximately three inches lower than the invert of the FES inlet to OCS- 2 (elevation 35.00). Although there is an elevation difference, both Outlet Control Structures appear to capture and convey base flows for a majority of the time. Even though flows conveyed through the outlet control structures at the Stormwater Basin have not been quantified, the presence of regular flows provides opportunity to augment base flows within Town Brook if redirected through structural modifications. The current diversion of base flows from the Crown Colony Place development is also consistent with the findings of DMF as noted in the March 7, 2007 Smelt Conservation Team Meeting Summary provided in the Preliminary Design Report, where it is noted that the gains in dry weather flows in Town Brook will depend on recapturing the chronic flow losses from the Crown Colony Place development.

Proposed Modifications

To restore base flows within Town Brook, the dry-weather operation of the outlet control structures within the Crown Colony Stormwater Basin will be modified such that dry weather flows would be directed through OCS-2, discharging to the Crown Colony culvert in Crown Colony Drive. Currently a high point exists at elevation 35.6 along the southerly edge of the Stormwater Basin between OCS-1 and OCS-2, and appears to divide base flows to the two outlet control structures. As part of the modifications to the Stormwater Basin, the FES to OCS-2 will be lowered to elevation 34.75, to provide a low flow drainage channel with positive slope into OCS-2. Minor re-grading at the southerly edge of the Stormwater Basin will be performed to eliminate the existing high point and provide a positive slope from the FES at OCS-2 up to an existing 36-inch RCP outlet at the southwest corner of the Stormwater Basin. Any areas impacted by grading activities beyond the drainage channel will be replanted to match existing conditions. A berm will be placed around OCS-1 which would prevent any slow moving base flows from entering OCS-1, directing base flows to OCS-2 and the 42-inch Crown Colony Drive culvert. The berm will vary in height depending on the elevation of the adjacent ground, with an average height of approximately one (1) foot. Currently the Crown Colony Drive culvert bypasses Town Brook at the Junction Structure, however, when these modifications are implemented in coordination with the

Proposed Improvements to the Crown Colony Drive stormwater system described in this Report, the flows can be redirected to Town Brook. Refer to Appendix B for Site Plans depicting the proposed improvements.

These modifications will redirect flows to OCS-2 during base flow conditions, until a significant storm event occurs at which point the basin will then fill to an elevation that overtops the berm allowing both outlet control structures to operate simultaneously. The openings and the configurations of the outlet control structures are not proposed to be modified, and as such the performance will not be affected. Information on the size and shape of the Crown Colony Stormwater Detention Basin was gathered from field survey, site observations, GIS information and record design plans. Varying water surface elevations within the basin were used in the analysis of the existing outlet control structures. The analyzed water surface elevations ranged from the elevation at the bottom of the basin to an elevation above the emergency overflow opening in the outlet control structures. The elevation of the proposed earthen berm at OCS-1 was then chosen to provide the desired amount of potential base flow diversion while maintaining the performance of the Crown Colony Stormwater Detention Basin in existing conditions. At the proposed earthen berm elevation of 36.7, approximately 14 cfs of flow could be directed to OCS-2, if available, prior to overtopping the proposed berm. Refer to Appendix B for the Site Plans and Details and Appendix C for the hydraulic analysis of the outlet control structures. Table 1 below summarizes the water surface elevations and discharge rates of the outlet control structures for existing and proposed conditions. In addition, the re-grading along the southern boundary of the basin will not introduce any new fill and will not have any material impacts on the overall flood storage capacity of the basin. Finally, it is the professional opinion of Lucas Environmental that the Crown Colony Stormwater Basin is constructed stormwater basin designed to reduce flooding in adjacent neighborhoods, and thus would not constitute a regulated resource area.

Table 1.0

Crown Colony Stormwater Basin Outlet Control Structure Analysis

Water Surface Elevation (NAVD 88)	Existing Conditions Discharge Flow Rate (cfs)			Proposed Conditions Discharge Flow Rate (cfs)		
	Outlet Control Structure 1 (OCS-1)	Outlet Control Structure 2 (OCS-2)	Total Flow	Outlet Control Structure 1 (OCS-1)	Outlet Control Structure 2 (OCS-2)	Total Flow
34.75	0	0	0	0	0	0
35.00	0.7	0	0.7	0	0.5	0.5
36.00	16.1	6.3	22.4	0	7.2	7.2
36.70	20.8	13.9	34.7	0	14.3	14.3
37.00	22.4	17.4	39.8	20.4	17.4	37.8
38.00	27.0	23.5	50.5	27.0	23.5	50.5
39.00	31.0	28.0	59.0	31.0	28.0	59.0
40.00	43.4	66.5	109.9	43.4	66.5	109.9

Proposed Operations & Maintenance

Accumulated debris at the trash racks for flared end sections may restrict some of the dry weather base flows from entering the drainage system within Crown Colony Drive. As part of a continued ongoing Operations and Maintenance (O&M) Plan the outlet control structures should be inspected, and any accumulated debris at the flared end section trash racks should be removed. The accumulated debris could likely be removed by hand without the use of heavy machinery.

In accordance with the MOA, the O&M measures as described herein must be performed annually prior to February 15th of each year. The City shall provide written confirmation that O&M inspections and actions taken (as needed) have been performed by February 20th of each year.

Construction Considerations

As mentioned in the discussion of proposed modifications, the improvements will include the modifications to existing structures, construction of an earthen berm for flow diversion and a drainage channel for conveying flows to OCS-2. It should be noted that the work will take place within an area as much as eight feet below adjacent access routes and will involve wet ground conditions. The limit of work will be minimized due to surrounding existing vegetation and will require erosion controls at the outlet control structures to prevent sediment from traveling downstream. The suggested erosion and sedimentation control measures should include a stabilized construction exit, erosion control barriers consisting of a straw bale and silt fence or silt socks, and a staging area. Silt socks should be used around the flared end sections of the outlet control structures. Disturbed areas should be planted and stabilized before erosion and sedimentation control measures are removed.

As required by the Final Order of Conditions and 401 Water Quality Certification for the Town Brook Enhancement Project, there shall be no construction that results in a discharge of waters to the Town Brook smelt run between March 1st and May 31st, unless otherwise allowed by DMF.

Conclusion

Through the implementation of the permanent modifications described herein, in conjunction with the Proposed Improvements within the Crown Colony Drive drainage system as described later in this Report, flows currently tributary to the Burgin Parkway system can be redirected to Town Brook. The modifications are relatively minor in nature and do not appear to have a material impact on the operation of the flood control functioning of the basin. Furthermore, there are no identified resources or sensitive vegetated areas immediately downstream of OCS-1 that would rely on base flows therefore the redirection of base flows from OCS-1 is acceptable.

3.2 CROWN COLONY DRIVE / CENTRE STREET DRAINAGE SYSTEM

Existing Conditions

As previously described, flows from the Crown Colony Stormwater Basin are controlled through two outlet control structures that appear to have been constructed to each accept base and stormwater flows. OCS-1 at the southwest corner of the Stormwater Basin discharges to a 48-inch culvert ultimately discharging to the Centre Street Culvert, bypassing Town Brook. Flow from OCS-2 discharges to a 42-inch culvert that follows the Crown Colony Drive alignment passing through a drain manhole junction structure that has a cross connection to Town Brook at the Centre Street Junction Structure via a raised 2-foot by 2-foot box culvert. Base flows in the 42-inch culvert do not reach the elevated cross connection and discharge into the Burgin Parkway Culvert bypassing Town Brook. Only during stormwater events where the capacity of the 42-inch culvert is nearly exceeded will flows have the potential to enter the raised 2-foot by 2-foot box culvert. Based on site investigations, the 2-foot by 2-foot box culvert showed evidence of prolonged dryness while the 42-inch culvert contained steady base flows. Based on discussions with DCR, the base flows from the north within the 42-inch culvert were originally intended to bypass Town Brook

due to the potentially high sediment content from a former quarry operation. To alleviate the potential accumulation of sediment in Town Brook potentially harming downstream smelt habitat, the base flows were routed to the Burgin Parkway Culvert where the sediment would be captured in the Tunnel Intake grit basin. A 24-inch drainage culvert in Centre Street conveys stormwater flows from the north discharging directly to the Junction Structure tributary to Town Brook. Flows in Town Brook also enter the Junction Structure from the south within existing twin 48-inch asphalt coated corrugated metal pipes (ACCMP) that accept base flows from the Town Brook Wetland behind Home Depot. Within the Junction Structure a significant amount of sediment accumulation has been documented downstream of the overflow trough and was recently removed as part of the Interim Protocol approved by MassDEP. The sediment accumulation can be attributed to the 90-degree bend immediately downstream of the trough. Refer to Appendix B for Site Plans and Appendix N for the hydraulic analysis including plans and profiles of the existing Crown Colony Drive/Centre Street stormwater culvert. Refer to Appendix G for historical construction and repair plans of the Centre Street Junction Structure.

Proposed Modifications

In order to redirect any available base flows from the 42-inch culvert in Crown Colony Drive to Town Brook the construction of a rectangular diversion manhole approximately 140 feet upstream from the Junction Structure along the existing 42-inch culvert alignment is proposed. This manhole will contain a 1-foot high stop log weir that will redirect base flows from the 42-inch culvert to a new 30-inch RCP and will allow stormwater flows from the existing 24-inch culvert and 42-inch culverts to be conveyed to the new 30-inch RCP and the existing 42-inch culvert. The new 30-inch RCP replaces the previously proposed 4-foot by 1-foot box culvert. The stop log will consist of an aluminum or stainless steel material with neoprene seals and will be installed in a configuration to allow for future adjustments, if required. The new 30-inch RCP will ultimately discharge directly into the existing 6.8-foot by 4-foot drainage culvert at the Junction Structure. The new connection will be located in the same location as an existing 24-inch RCP connection to minimize the impact on the 6.8-foot by 4-foot culvert's structural integrity. Based on the prior difficulty to access this area for sediment removal, an additional manhole will be installed to provide more direct access to this new inlet location for ease of continued future maintenance access. The downstream invert of the 30-inch RCP into the Junction Structure is proposed at elevation 23.9, nearly matching the elevation of the top of the overflow trough in order to maintain optimal hydraulic performance during base flow conditions.

In addition to the improvements noted above, two (2) water quality units will be installed to remove suspended sediment in flows tributary to Town Brook. One water quality unit will be included along the proposed 30-inch RCP alignment in Centre Street north of Burgin Parkway and a second water quality unit will be installed along the twin 48-inch ACCMPs in Centre Street south of Burgin Parkway, which convey base flows from the Town Brook Wetland behind Home Depot. Surface drainage in the vicinity of the Junction Structure will also be re-routed to connect to the new 30-inch RCP upstream of the proposed northerly water quality unit.

The work on the 48-inch culverts and the connection to the Junction Structure will result in minor impacts to Bank and Land Under Waterbodies and Waterways (LUWW) associated with the buried culverts conveying Town Brook base flow. The limit of Bank is equivalent to the federally regulated Ordinary High Water of the brook. While there will be minimal impacts to resource areas due to construction of the two water quality units and the 30-inch RCP, the improvements are consistent with the recommended alternatives as noted in the Alternatives Report, and are required by the MOA, as well as the FOC and WQC for the Town Brook Enhancement Project (MassDEP File No. 59-1261). Through a letter written to the MassDEP dated March 20, 2013, the City informed MassDEP and the City Conservation Commission

that the Proposed Improvements will be completed under the provisions of the FOC for the Town Brook Enhancement Project (MassDEP File No. 59-1261), and as such did not require the filing of an additional NOI. Through the letter, the City requested written notification if MassDEP or the City Conservation Commission felt that additional permitting was necessary. No objection or opinion contrary to the City's position was raised, thereby allowing the Project to proceed under the original Town Brook Enhancement Project FOC. A Section 404 Category 2 Permit will be submitted to the USACE for review and approval since the Junction Structure is a federally regulated structure, and improvements to the structure require USACE review and approval.

Hydraulics

A hydraulic model was developed based on information compiled from field survey and record drawings to determine the effects of the proposed weir at the diversion manhole on the performance of the Crown Colony/Centre Street drainage system. The model was created for the base flow (dry weather) hydraulic analysis as well as the design storm hydraulic analysis. The base flows included in the analysis ranged from the estimated "lost" base flows from Crown Colony, estimated to be approximately 3.5 cfs, up to the upper limit of base flow recapture goals of 10 cfs. A design storm flow rate of 35 cfs was used for the purposes of the analysis which was chosen based on the overall capacity of the Crown Colony Drive/Centre Street drainage system and the Crown Colony Stormwater Basin outlet control structures. Stormwater flows above the 35 cfs design flow rate result in a surcharged condition of segments of storm drains tributary to the 42-inch main. In addition to the 42-inch main, there is also a 24-inch drainage culvert in Centre Street which conveys stormwater flows from the north, ultimately discharging to the Junction Structure. The full flow capacity of this culvert is approximately 15 cfs.

The Proposed Improvements include the construction of a diversion manhole with a stop log weir that will direct base flows from Crown Colony into a proposed 30-inch RCP to Town Brook, while allowing stormwater flows to discharge over the weir, into the existing 42-inch culvert and ultimately to the Burgin Parkway system. Stormwater flows from the existing 42-inch culvert in Crown Colony Drive and 24-inch culvert in Centre Street will confluence at the proposed diversion manhole, and flows above the weir height will be diverted across the weir into the existing 42-inch culvert discharging to Burgin Parkway. The stop log diversion weir will include a 1-foot high 4-foot wide stop log that will be centered in a larger concrete weir with an overall width of approximately 10 feet. The 1-foot high stop log has been designed to direct flows up to approximately 5 cfs to Town Brook, allowing stormwater flows in excess of 5 cfs to discharge over the weir to the Burgin Parkway system. The full flow design capacity of the proposed 30-inch RCP is approximately 18 cfs, which provides increased hydraulic capacity compared to the existing 24-inch RCP that it will replace, which has a capacity of approximately 15 cfs. The existing 42-inch culvert will not be modified, and will maintain its existing capacity. Using these design flow rates, the existing and proposed hydraulic models were computed, and the hydraulic grade lines (HGL) were compared for any impacts resulting from the proposed improvements. Refer to Appendix C for technical documentation and the hydraulic model for the Crown Colony Drive/Centre Street drainage system performance under the existing and proposed conditions for the base flow and design storm event flow rates. A HGL comparison of the existing and proposed conditions of the Crown Colony Drive/Centre Street drainage systems is included for reference.

Overall, the Crown Colony Drive/Centre Street drainage system, with the proposed improvements, generally matches the performance of the drainage system in existing conditions with minor increases in the HGL due to the additional head losses where new diversions and the weir are proposed. Also, since the capacity of the various culvert segments and the stormwater flow routing will not to be significantly modified, it is not anticipated that there will be any material negative impact to the flood conveyance

capacity of the Town Brook drainage system downstream of the Junction Structure, which includes the 6.8-foot by 4-foot culvert and a combination of other large drainage culverts and an open channel conveyances. Furthermore, the flow tributary to downstream reaches of the Town Brook drainage system during storm events is also controlled by a side overflow weir and a baffle in Town Brook at the Tunnel intake at which point all stormwater flows above 100-cfs are diverted into the Tunnel. As storm event flows entering the Tunnel intake structure exceed the capacity of the baffle they spill over the side wall weir into the Tunnel.

Work on the twin 48-inch culverts in Centre Street on the southerly side of Burgin Parkway will be limited to the installation of a water quality unit and the associated diversion manhole that will direct base flows through the water quality unit. This work is not anticipated to have a material impact on the hydraulic performance of the drainage system during base flows or stormwater flows in this drainage system. Refer to Appendix B for Site Plans and Details of the proposed improvements.

Water Quality

The limits of the local watershed tributary to the proposed water quality units were based on in the field survey, site investigation, GIS information and record plans. In the proposed conditions approximately 5.3 acres of impervious area is directly tributary to the proposed water quality unit north of Burgin Parkway, resulting in 6.1 cfs of water quality flow to be treated. Approximately 3.4 acres of impervious area is directly tributary to the proposed water quality unit south of Burgin Parkway, resulting in 3.9 cfs of water quality flow to be treated. The water quality flow rates are based on one inch of water quality treatment to help ensure removal of sediment in Town Brook. Larger water quality units are proposed to account for treatment of flows beyond the local tributary watershed, up to 14 cfs, that originate from the Crown Colony Stormwater Detention Basin and the Town Brook Wetland. The preferred water quality units will be Vortechs® manufactured by Contech, which have been given a "1" rating by Massachusetts Stormwater Technology Evaluation Project (MASTEP). This rating verifies that there is sufficient Technology Acceptance Reciprocity Partnership (TARP)-compliant or similar reliable field or laboratory data on this technology to be able to evaluate pollutant removal efficient claims.[1] Refer to Appendix B for Site Plans and Details showing the locations and configurations of the proposed water quality units. Refer to Appendix C for information regarding the water quality unit and the Total Suspended Solids (TSS) removal performances.

Proposed Operations & Maintenance

Although the construction of the diversion structure is not anticipated to result in significant sediment accumulation, this location should be inspected concurrently with the proposed water quality units. Any accumulated sediment should be removed and disposed of in accordance with the proper local and state regulations.

The discharge of the proposed 30-inch RCP at the Junction Structure will be a location where sediment has the potential to accumulate. Due to the current configuration of the Junction Structure, and as identified in the USACE Town Brook Local Protection Project O&M Manual (2003), this location currently experiences sediment accumulation and may potentially contribute to backwater effects prematurely diverting flows to Burgin Parkway at the overflow trough. Although the water quality unit will reduce the accumulation of sediment at this location, it should continue to be inspected and any accumulated

[1] *University of Massachusetts – Amherst, Stormwater Technologies Clearinghouse,* http://www.mastep.net/index.cfm *(accessed March 2013)*

sediment should be removed and disposed of in accordance with the proper state and local regulations. Refer to Appendix D for O&M of the proposed water quality units and Appendix I for excerpts from the USACE Town Brook Local Protection Project O&M Manuals.

The proposed water quality units should be inspected at least twice per year. The water quality units should be cleaned when inspection reveals that the sediment depth has accumulated to within 12 to 18 inches of the dry-weather water surface elevation. More frequent inspections may be necessary in areas of rapid sediment accumulation; therefore the maintenance cycle should be modified as needed for site specific factors.

In accordance with the MOA, the O&M measures as described herein must be performed annually prior to February 15th of each year. The City shall provide written confirmation that O&M inspections and actions taken (as needed) have been performed by February 20th of each year.

Construction Considerations

As mentioned in the discussion of proposed modifications, the improvements will include the construction of a drainage conduit, drainage structures, water quality units, and modification of an existing drainage culvert. It should be noted that the work will take place within busy roadways and will require traffic management and police detail. Also, the water quality units will require a crane service for installation and the northerly water quality unit will be located near an existing elevated highway onramp, so care will need to be taken during installation.

The installation of the northerly water quality unit along the existing drainage culvert does not convey base flows, however will require bypass of storm water flows. The installation of the southerly water quality unit treating base flows conveyed in the twin 48-inch culverts will require a pump capable of conveying up to 3 cfs, used for bypass during construction. Sandbags will be used to create a berm in the twin 48-inch culverts, where flow will be pumped out of the twin 48-inch culverts at the upstream manholes, will be conveyed around the work area and will discharge back into the Town Brook culverts downstream of the work area.

The limit of work will be minimized due to traffic management considerations and will require silt sacks to be installed at adjacent catch basins on both public and private properties to prevent sediment from traveling downstream. Disturbed areas should be planted and stabilized before erosion and sedimentation control measures are removed. Finally, the relocation of existing electrical, telecommunications and fire alarm conduits within Centre Street adjacent to the Home Depot will be required to allow for the construction of the water quality unit. Temporary services may be required to facilitate the relocation.

As required by the Final Order of Conditions and 401 Water Quality Certification for the Town Brook Enhancement Project, there shall be no construction that results in a discharge of waters to the Town Brook smelt run between March 1st and May 31st, unless otherwise allowed by DMF.

Conclusion

Through the installation of the diversion manhole, a new 30-inch RCP in the Crown Colony Drive/Centre Street stormwater system and associated local drainage improvements as described herein, in conjunction with the proposed improvements at the Crown Colony Stormwater Basin as previously described, flows can be recaptured in Town Brook. A permanent access manhole will be installed in the vicinity of the

existing Junction Structure to provide easier access for removal of accumulated sediment. The installation of the water quality units will reduce the sediment accumulation within the Junction Structure and in turn will help alleviate the premature diversion of base flows into the Burgin Parkway Culvert. A USACE Section 404 Category 2 Permit will be required for modifications to the Junction Structure and work as noted herein will be performed under the provisions of the FOC for the Town Brook Enhancement Project (MassDEP File No. 59-1261).

3.3 TOWN BROOK OPEN CHANNEL REACH

Existing Conditions

Base flows in Town Brook exit the Junction Structure from a 72-inch RCP daylighting to a natural bottom vegetated open channel reach of Town Brook, which continues downstream for approximately 750-feet prior to entering a culverted segment and further continuing downstream in alternating open channel and culverted segments. It has been observed and noted by the USACE and representatives from DCR that sediment build-up in this open channel reach of Town Brook, and more specifically at the outlet to the 72-inch culvert, has been a problem. The buildup of sediment in this area has the potential to create backwater effects that extend upstream to the overflow trough, which can prematurely divert base flows into the Burgin Parkway Culvert. As part of the Interim Protocol, the entire length of the open channel reach was cleared of accumulated sediment. Refer to Appendix B for Site Plans including a plan and profile of this reach of the open channel Town Brook following completion of the sediment removal.

Proposed Modifications

As noted in the Water Quality Certification for the Town Brook Enhancement Project (MassDEP file 059-1261), Special Condition 28, the City is required to place a permanent mark at the outfall of the 72-inch Centre Street Culvert at the elevation of the top of the overflow trough (elevation 24.3). It should be noted that while the water surface elevation within the Town Brook culvert at the overflow trough was observed at an approximate elevation of 24.3, the water surface elevation decreased to an approximate elevation of 24.1 at the 72-inch culvert. Although the water surface at the 72-inch outfall was below the elevation of the overflow trough, base flows were still being prematurely diverted from Town Brook. To more accurately determine an appropriate elevation for a permanent mark, various tailwater elevations were entered into the model with various flow rates that corresponded to the point at which flows began to overtop the overflow trough. The model was calibrated based on field observation and in the field survey of water surface elevations within the Junction Structure and 72-inch RCP outlet. Based on the results of the modeling and confirmed by in the field observations, the overflow trough within the Junction Structure is very susceptible to minor variations in the tailwater conditions at the outlet. See Appendix C for technical backup on the calculation of the elevation of the high water mark. That information is summarized in Table 2.0 below:

Table 2.0

Tailwater Elevation (NAVD 88)	Base Flow Rate (cfs)
24.1	3.8
24.0	7.6
23.9	9.5
23.8	10.9

As the high end of the range of base flows within Town Brook is expected to be 10 cfs, the high water mark should be placed at elevation 23.7, which corresponds to the lowest elevation at which flows could potentially be overtopping the overflow trough in the Centre Street Junction Structure. The calculated flow capacity of the overflow trough is consistent with the measured flow at USGS gage #1105585 located in Town Brook downstream of Miller Stile Road near Quincy Center, which recorded the base flows on December 19, 2012 to be approximately 3 cfs. This data is also consistent with the hydraulic model created, factoring the measured tailwater elevation at the outlet of the 72-inch culvert, which indicates that under the tailwater controlled condition due to the sediment accumulation, approximately 3.8 cfs can be conveyed across the overflow trough prior to spilling over into the Burgin Parkway system. Refer to Appendix B for the hydraulic calculations and Appendix M for the USGS Gage data. The existing conditions hydraulic analysis was also calibrated based on surveyed water surface elevations within the various flood control structures.

A staff gauge will be installed at the outlet of the 72-inch culvert, which will identify elevation 23.7 as the elevation at which point flow diversion should be further investigated within the Junction Structure. The staff gauge will be installed with mechanical stainless steel drop in fasteners that will be installed in the existing stone headwall. Care shall also be taken to coordinate the installation of the staff gauge with the project surveyor to correctly reference the proper datum.

Proposed Operations & Maintenance

The 750-foot long reach of natural bottom, open channel portion of Town Brook downstream of the 72-inch RCP outlet should be inspected for sediment build up and any additional fallen trees or debris found to be encroaching into Town Brook. Any observed sediment should be removed to allow for positive drainage within the open channel reach, and accumulated debris and/or fallen trees should be removed. If sediment accumulation is properly managed, the open channel reach is unlikely to contribute significantly to a backwater effect causing premature diversions of flow at rates below the design capacity of the trough.

The high water mark placed at the outlet of the 72-inch culvert should also be visually inspected if the low flow alarm is triggered at the USGS Gauge at Miller Stile Road due to flows dropping below the 2 cfs threshold. If the water level at the outlet of the 72-inch culvert is below the mark it can be assumed flows are not being diverted at the overflow trough within the Junction Structure, whereas if the water level at the outlet of the 72-inch culvert is above the mark, it is possible that flows are being prematurely diverted at the trough, and the manholes at the Junction Structure should be opened to visually verify diversions. If flows are being diverted, sediment accumulation or blockages should be removed.

In accordance with the MOA, the O&M measures as described herein must be performed annually prior to February 15th of each year. The City shall provide written confirmation that O&M inspections and actions taken (as needed) have been performed by February 20th of each year.

Construction Considerations

As required by the FOC and WQC for the Town Brook Enhancement Project, there shall be no construction that results in a discharge of waters to the Town Brook smelt run between March 1st and May 31st, unless otherwise allowed by DMF. Care should be taken when installation of the staff gauge is performed as to minimize disturbances to the Town Brook open channel.

Conclusion

A staff gauge with a permanent mark at elevation 23.7 shall be installed at the outlet of the 72-inch culvert. The installation of the staff gauge and mark will help identify when premature diversions may be occurring and will allow City staff to respond and perform maintenance promptly to address the reason for the diversion. This mark will allow for visual inspection if the low flow alarm is triggered at the USGS Gauge at Miller Stile Road due to flows dropping below the 2 cfs threshold. The high water mark will be visible from the open channel reach, and will not require entering the culverted segments of Town Brook. The open channel segment of Town Brook should also continue to be maintained and the O&M procedures set forth in the USACE O&M Manual for sediment removal within the open channel reach of Town Brook should be followed. Refer to Appendix I for excerpts from the USACE O&M Manuals. Also, as previously described, water quality units will treat flows tributary to Town Brook prior to entering the Junction Structure and as a result will help reduce the sediment load further upstream of the Open Channel Segment while also minimizing potential future maintenance disturbing the existing natural bottom of Town Brook.

[THIS PAGE INTENTIONALLY LEFT BLANK]

4 CONCLUSION

4.1 SELECTED BASE FLOW RECAPTURE IMPROVEMENTS

Through additional research and discovery of record documents, along with the field investigations and discussions with DCR and the City of Quincy, it appears that base flows can be recaptured in Town Brook through the proposed improvements to the Crown Colony Stormwater Basin and the Crown Colony Drive/Centre Street drainage system, along with ongoing sediment management performed on a regular basis.

CROWN COLONY STORMWATER DETENTION BASIN

Base flows were observed discharging from the Crown Colony Stormwater Basin and controlled by the two outlet control structures. It appears that through a modification of the invert elevation of OCS-2, localized re-grading of the Stormwater Basin coupled with construction of a small berm at OCS-1, increased base flows will be directed to discharge through OCS-2 to the 42-inch culvert in Crown Colony Drive. When performed in conjunction with modifications at the Crown Colony Drive/Centre Street drainage system, the modifications to the Crown Colony Stormwater Basin are expected to result in the recapture of base flows in Town Brook.

CROWN COLONY DRIVE / CENTRE STREET DRAINAGE SYSTEM

OCS-2 discharges to the 42-inch culvert following the Crown Colony Drive alignment, which ultimately discharges into the Burgin Parkway Culvert below, bypassing Town Brook. Based on visual inspection, field survey and review of record plans, it appears that through the construction of a diversion structure approximately 140-feet upstream of the Junction Structure, low flows will be redirected to discharge to the existing 6.8-foot by 4-foot Town Brook drainage culvert. A 1-foot high weir or stop log within the diversion manhole will redirect base flows to the downstream reaches of Town Brook, effectively eliminating dry weather flow diversions from Crown Colony. When performed in conjunction with modifications at the Crown Colony Stormwater Basin, the modification to the Crown Colony Drive/Centre Street drainage system is expected to result in the recapture and treatment of base flows in Town Brook.

A permanent access manhole will be installed on the existing 6.8-foot by 4-foot Town Brook drainage culvert in Centre Street to provide better access for removal of accumulated sediment in the culverted segments of Town Brook. Additionally, two water quality units will be installed to remove suspended sediment in flow contributing to Town Brook. One water quality unit will be included along the proposed 30-inch RCP alignment in Centre Street north of Burgin Parkway, and a second water quality unit will be installed along the twin 48-inch ACCMPs in Centre Street, south of Burgin Parkway, which convey base flows from the Town Brook Wetland behind Home Depot.

As described in this Report, any alteration to wetlands or Town Brook, including culverted sections with artificial channels, will be subject to Section 404 review and permitting by the USACE. Based upon review of the available information, the construction of the improvements described herein will require Category 2 review as modifications are proposed to a federal project work area, the Centre Street Junction

Structure. The Centre Street Junction Structure is also part of a federally constructed Town Brook Local Protection Project (Flood Control Project), and the USACE retains technical oversight, particularly related to the structural integrity, access, and hydrology. The proposed improvements will be submitted for review and approval by the Construction/Operations Division.

OPERATIONS AND MANAGEMENT PLAN

In addition to the proposed improvements previously noted, adhering to an ongoing sediment O&M plan would likely help eliminate dry weather flow losses currently experienced at the overflow weir within the Junction Structure. This is consistent with the findings of DMF noted in the 2006 Smelt Conservation Team Meeting Summary, which indicates that, at that time, the sediment removal and maintenance efforts of the City's DPW in the open channel reaches of Town Brook downstream of the Junction Structure resulted in a significant reduction in dry weather flow diversions at the Junction Structure. As described herein, the outlet control structures at the Crown Colony Stormwater Basin should be inspected regularly. The diversion weirs in the proposed Crown Colony Drive diversion structure north of Burgin Parkway and the diversion structure at the water quality unit south of Burgin Parkway should be inspected immediately following construction, and at least annually thereafter in accordance with the inspection requirements as noted in the MOA. In addition to the O&M efforts associated with the proposed modifications, the other components of the Flood Control Project should also be inspected in accordance with the USACE O&M manual. The ongoing O&M measures must be performed annually prior to February 15th of each year as required by MOA, and the City shall provide written confirmation that O&M inspections and actions taken (as needed) have been performed by February 20th of each year.

A staff gauge with a permanent mark will be placed at the outlet of the 72-inch culvert to help identify when premature diversions may be occurring to allow City staff to respond and perform maintenance promptly to address the reason for diversion.

4.2 CONCLUSION

This Report identifies proposed modifications that will improve the water quality and recapture base flows currently being diverted from Town Brook without any material impacts to flood control for the surrounding areas. Through the implementation of the proposed improvements, in conjunction with effective maintenance, base flows within Town Brook will be returned to levels that historically sustained a healthy smelt spawning habitat in the downstream reaches of Town Brook.

APPENDIX A
FIGURES

Figure 1 – Town Brook Drainage Features
Figure 2 – Town Brook Drainage Features Detail

J:\Fay Spofford & Thorndike\Town Brook Base Flow Recapture\CAD\Planset\Interim Protocol Figures\10_006_TB_INT_PROTOCOL_FIG.dwg

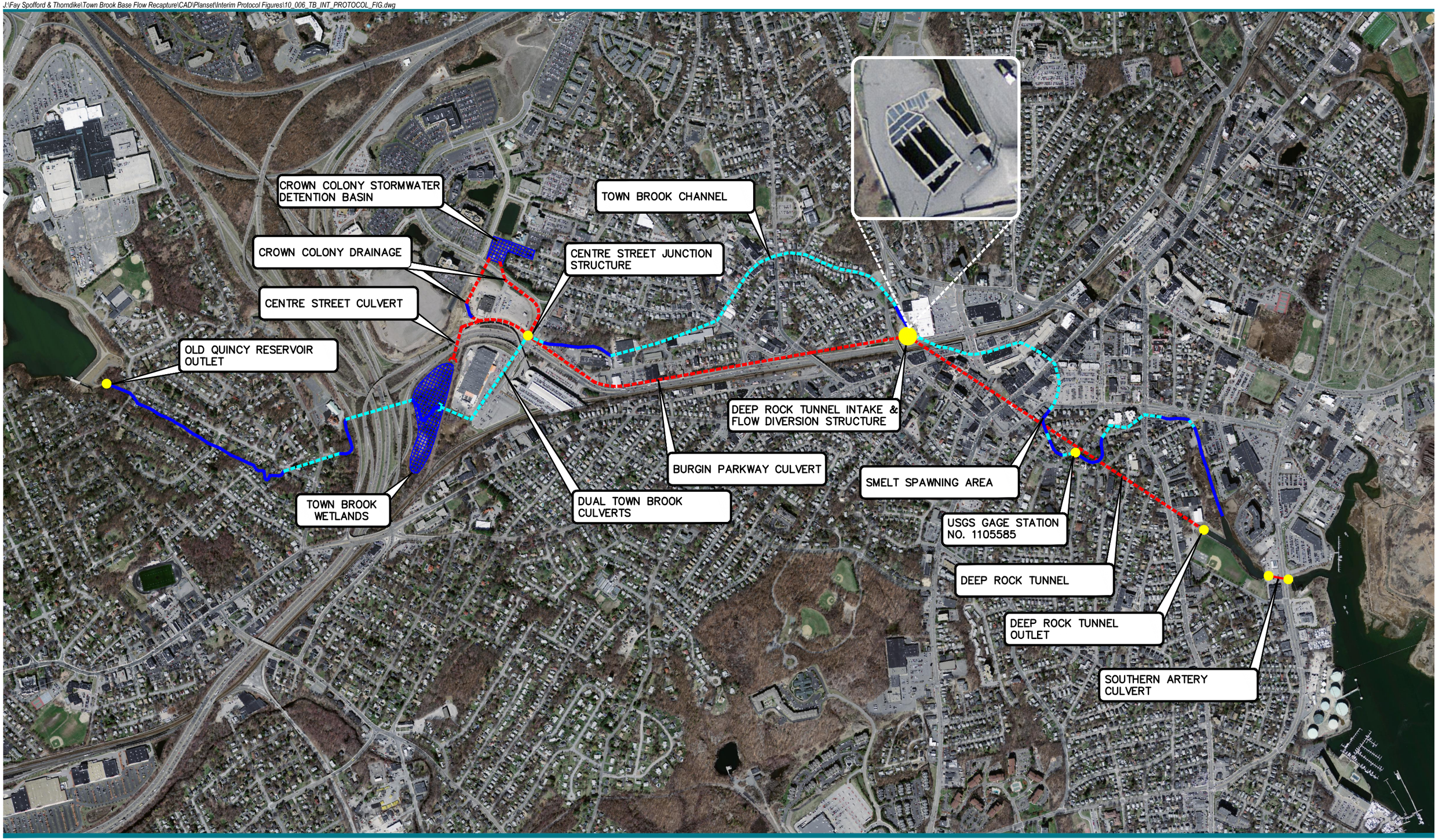

EBI Consulting
environmental | engineering | due diligence
21 B Street | Burlington, MA 01803
Tel: 781.273.2500 | Fax: 781.273.3311

LEGEND

- POINTS OF INTEREST
- EXISTING DIVERSION CHANNEL/TUNNEL
- EXISTING OPEN CHANNEL
- EXISTING CLOSED CONDUIT

0 500 1000 Feet

Title: Figure 1
Town Brook Drainage Features

Date: April 5, 2013

Project: Town Brook Base Flow Recapture Report
Centre Street
Quincy, Massachusetts 02169

Job No: 16120008

NOTE:
THIS EXHIBIT AND NOTED SITE CONDITIONS IS BASED ON OBSERVATIONS FROM SITE VISITS PERFORMED ON JULY 23 AND JULY 25, 2012 .

1 CROWN COLONY OCS-1

2 CROWN COLONY OCS-2

3 TOWN BROOK OVERFLOW WEIR

4 TOWN BROOK OPEN CHANNEL OUTLET

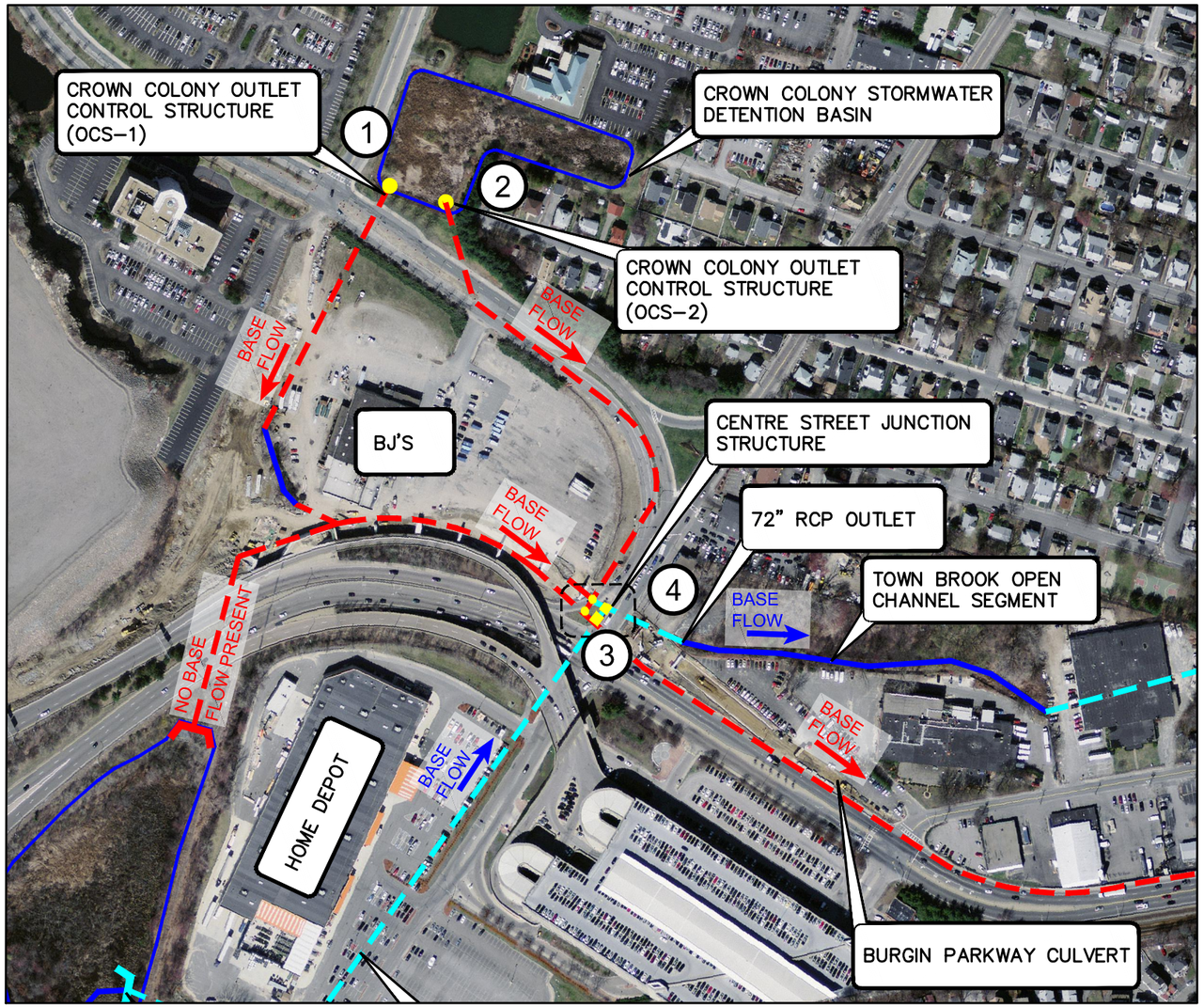

CENTRE STREET JUNCTION STRUCTURE AREA
SCALE = 1":300'

0 150 300 Feet

5 TOWN BROOK SEDIMENT TRAP
(SIDE OVERFLOW WIER)

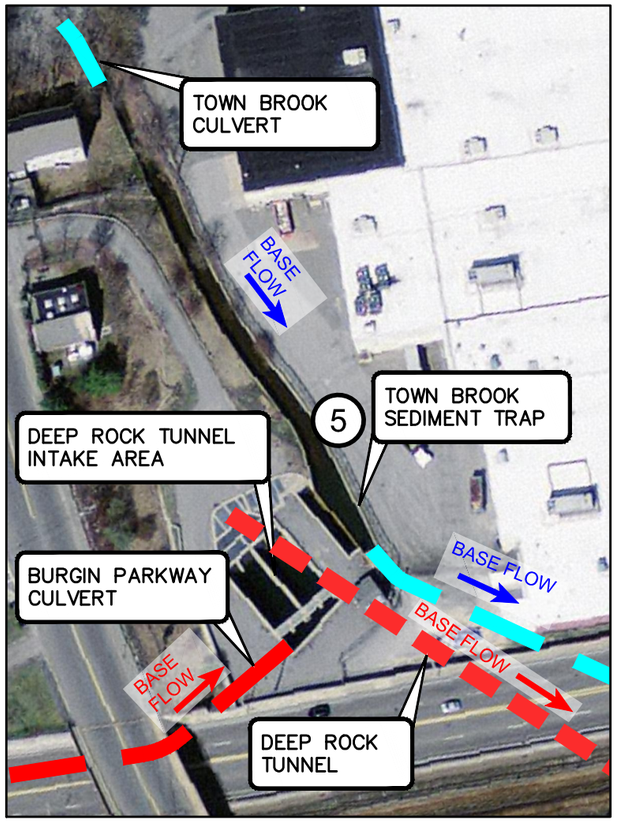

DEEP ROCK TUNNEL INTAKE AREA
SCALE = 1":100'

0 50 100 Feet

EBI Consulting
environmental | engineering | due diligence
21 B Street | Burlington, MA 01803
Tel: 781.273.2500 | Fax: 781.273.3311

LEGEND
- POINTS OF INTEREST
- EXISTING DIVERSION CHANNEL/TUNNEL
- EXISTING OPEN CHANNEL
- EXISTING TOWN BROOK CLOSED CONDUIT

Title: Figure 2
Town Brook Drainage Features Detail

Date: April 5, 2013

Project: Town Brook Base Flow
Recapture Report
Centre Street
Quincy, Massachusetts 02169

Job No: 16120008

APPENDIX B

TOWN BROOK BASE FLOW RECAPTURE IMPROVEMENTS PLANS

Prepared by EBI Consulting and dated April 17, 2013

- **Half Size (11”x17”)**
- **Full Size (22”x34”) – Provided Under Separate Cover**

Site Plans
for
Town Brook Base Flow Recapture Improvements
Centre Street - Quincy, MA

Issued For: Permitting
Date Issued: April 17, 2013
Latest Issue: April 17, 2013

SHEET INDEX

EBI Consulting Drawings

SHEET NO.	SHEET TITLE	LATEST ISSUE
C-1	Title Sheet	4/17/2013
C-2	Legend & General Notes	4/17/2013
C-3	Existing Overall Site Plan & Key Map	4/17/2013
C-4.1	Proposed Improvements Crown Colony Stormwater Detention Basin	4/17/2013
C-4.2	Proposed Improvements Centre Street (North)	4/17/2013
C-4.3	Proposed Improvements Centre Street (South)	4/17/2013
C-5.1	Details 1	4/17/2013
C-5.2	Details 2	4/17/2013
C-5.3	Details 3	4/17/2013
C-6.1	Existing Plan & Profile 1	4/17/2013
C-6.2	Existing Plan & Profile 2	4/17/2013
C-6.3	Existing Plan & Profile 3	4/17/2013
C-6.4	Existing Plan & Profile 4	4/17/2013

Reference Drawings

SHEET NO.	SHEET TITLE	LATEST ISSUE
1 to 4	Existing Conditions	4/2/2013

Dig Safe Systems, Inc.
1-888-DIG-SAFE
(1-888-344-7233)

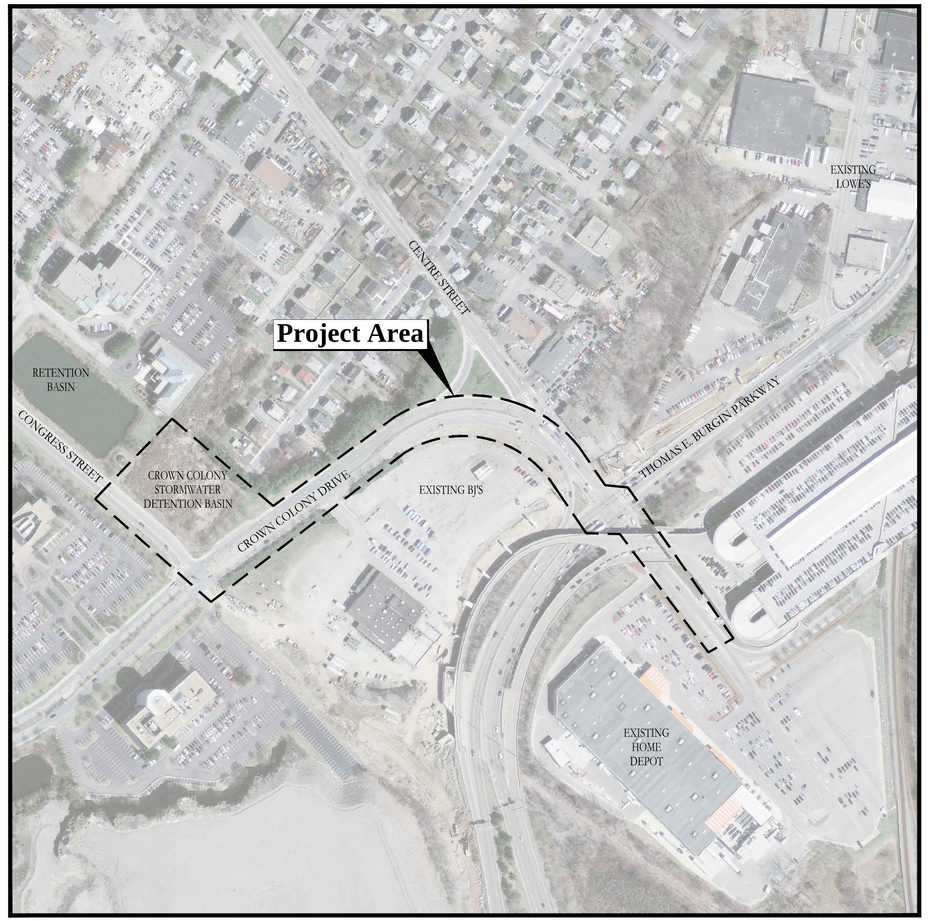

0 100 200 Feet

LOCUS MAP

Source: MassGIS

PROPERTY INFORMATION

OWNER (1)
City of Quincy
1305 Hancock Street
Quincy, MA 02169
Tel: (617) 376-1362
Fax: (617) 376-1097

OWNER (2)
Flatley John J Etal Trees
Crown Colony
Nominee Trust
C/O The Flatley Company
P.O. Box 850168 Attn: Carol Shan
Braintree, MA 02168-0185
Tel: (781) 380-7731

OWNER (3)
HD Development of Maryland Inc.
Property Tax Dept. 2608
P.O. Box 105842
Atlanta, GA 30348
Tel: (770) 433-8211

OWNER (4)
Penn Street, LLC
C/O Lowes Home Ctrs
P.O. Box 1000
Tax Dept. NB3TA
Mooresville, NC 28115

ASSESSOR'S INFORMATION
1. City of Quincy Right-of-Way
2. Map 4033, Lot 37-5A
3. Map 3092B, Lot 12-1
4. Map 3089, Lot 18-A

APPLICANT
City of Quincy
1305 Hancock Street
Quincy, MA 02169
Tel: (617) 376-1362
Fax: (617) 376-1097

PROJECT TEAM

CIVIL ENGINEER
EBI Consulting
environmental | engineering | due diligence
21 B Street | Burlington, MA 01803
Tel: 781.273.2500 | Fax: 781.273.3311
www.ebiconsulting.com

SURVEYOR
ThompsonFarland
398 County Street
New Bedford, MA 02740
Tel: (508) 717-3479

ENVIRONMENTAL SCIENTIST
Lucas Environmental, LLC
67 Coddington Street, Suite 204
Quincy, MA 02169
Tel: (617) 405-4140

EBI Consulting
environmental | engineering | due diligence
21 B Street | Burlington, MA 01803
Tel: 781.273.2500 | Fax: 781.273.3311
www.ebiconsulting.com

COMMONWEALTH OF MASSACHUSETTS
KARLIS SKULTE
CIVIL
No. 47703
REGISTERED PROFESSIONAL ENGINEER
4/17/2013

PREPARED FOR:
City of Quincy
1305 Hancock Street
Quincy, MA 02169
Tel: (617) 376-1362
Fax: (617) 376-1097

THIS DOCUMENT IS THE DESIGN PROPERTY AND COPYRIGHT OF EBI CONSULTING, INC. AND FOR THE EXCLUSIVE USE BY THE TITLE CLIENT. ANY DUPLICATION OR USE WITHOUT EXPRESS WRITTEN CONSENT OF THE CREATOR IS STRICTLY PROHIBITED.

DRAWING SCALES NOTED ARE FOR 22" x 34" SIZE PRINTED MEDIA ONLY. ALL OTHER PRINTED SIZES ARE DEEMED "NOT TO SCALE".

SUBMITTALS

NO.	DATE	DESCRIPTION	BY

DATE: April 17, 2013
PROJECT NUMBER: 16120008

PROJECT TITLE:
Town Brook Base Flow Recapture Improvements
Centre Street
Quincy, Massachusetts 02169
Norfolk County

ISSUED FOR:
Permitting
(Not Approved for Construction)

SHEET TITLE:
Title Sheet

SCALE: AS NOTED
DESIGNED BY: MVG | JVC
CHECKED BY: KPS | BKF

SHEET NO: C-1

LEGEND

General

- PROPERTY LINE
- RIGHT-OF-WAY
- INTERNAL LOT LINE
- ABUTTING PROPERTY LINE
- EASEMENT
- BLSF — BORDERING LAND SUBJECT TO FLOODING
- MAHW/OHW
- WETLAND BOUNDARY
- 100'RA — 100' RIVERFRONT AREA
- 200'RA — 200' RIVERFRONT AREA
- 100'BZ — 100' WETLAND BUFFER ZONE
- NDZ — NO DISTURB ZONE
- LIMIT OF DISTURBANCE
- BL 10 EL=98.5 — BORING LOCATION
- MW 2 EL=100.5 — MONITORING WELL
- TP 5 EL=112.7 — TEST PIT LOCATION
- MATCHLINE

Layout and Materials

- 100'–6" — BUILDING
- EN — BUILDING ENTRANCE
- LD — LOADING DOCK
- BUILDING SETBACK
- 50+00 — BASELINE
- LIMIT OF WORK
- SAWCUT LINE
- GRAVEL ROAD
- EOP — EDGE OF PAVEMENT
- VGC — VERTICAL GRANITE CURB
- VGC PCC — LIMIT OF CURB TYPE
- VGC — CONCRETE SIDEWALK
- VGC — PAVER SIDEWALK
- LANDSCAPE BUFFER
- PARKING SETBACK
- 50 — TOTAL PARKING COUNT
- 20 — STANDARD STALL COUNT
- C10 — COMPACT STALL COUNT
- ACCESSIBLE PARKING
- VAN — VAN ACCESSIBLE PARKING
- ACCESSIBLE CURB RAMP
- WHEEL STOP
- SIGN
- BOLLARD
- SITE LIGHT POLE
- UTILITY POLE
- GUY POLE
- OHW — OVERHEAD WIRE
- RETAINING WALL
- STONE WALL
- BARB WIRE FENCE
- CHAIN LINK FENCE
- CONSTRUCTION FENCE
- STOCKADE FENCE
- STEEL GUARDRAIL
- WOOD GUARDRAIL
- PATH
- TREE LINE

Erosion Control

- EROSION CONTROL BARRIER
- STRAW BALES
- STABILIZED CONSTRUCTION EXIT
- SILT SACK SEDIMENT TRAP

Grading

- 10 — MAJOR CONTOUR
- 1 — MINOR CONTOUR
- 100.5 TC 100.0 BC — SPOT ELEVATION
- DETENTION BASIN
- SWALE
- BIORETENTION AREA
- 100-YEAR FLOOD ELEVATION
- 10-YEAR FLOOD ELEVATION

Drainage

- 12"RCP — DRAIN
- 6"HDPE — ROOF DRAIN
- 6"PVC — UNDER DRAIN
- SINGLE CATCH BASIN
- DOUBLE CATCH BASIN
- DRAIN MANHOLE
- CO — CLEANOUT
- FLARED END SECTION
- HEADWALL
- RIPRAP

Utilities

- 6"S — SEWER
- FM — FORCE MAIN
- SEWER MANHOLE
- PLUG OR CAP
- 6"W — WATER
- 2"DW — DOMESTIC WATER
- 6"FP — FIRE PROTECTION
- CS — CURB STOP AND BOX
- HYD — FIRE HYDRANT
- PIV — POST INDICATOR VALVE
- 8"W 6"W — REDUCER
- SHUT-OFF VALVE
- SIAMESE CONNECTION
- TSV — TAPPING SLEEVE AND VALVE
- WV — WATER VALVE AND BOX
- WM — WATER METER
- G — GAS
- GG — GAS GATE
- GM — GAS METER
- UGE — UNDERGROUND ELECTRIC
- EMH — ELECTRIC MANHOLE
- EM — ELECTRIC METER
- TRANSFORMER PAD
- UGT — UNDERGROUND TELEPHONE
- TMH — TELEPHONE MANHOLE
- CATV — CABLE TV
- FO — FIBER OPTICS
- CONDUIT
- HH — HAND HOLE
- PB — PULL BOX

ABBREVIATIONS

General

ACR	ACCESSIBLE CURB RAMP
ADA	AMERICANS WITH DISABILITIES ACT
APPROX	APPROXIMATE
ARCH	ARCHITECTURAL
BC	BOTTOM OF CURB
BCB	BITUMINOUS CONCRETE BERM
BCC	BITUMINOUS CONCRETE CURB
BIT	BITUMINOUS
BLDG	BUILDING
BLSF	BORDERING LAND SUBJECT TO FLOODING
BOT	BOTTOM
BC	BOTTOM OF CURB
BS	BOTTOM OF SLOPE
BW	BOTTOM OF WALL
BWLL	BROKEN WHITE LANE LINE
CLF	CHAIN LINK FENCE
CONC	CONCRETE
DPW	DEPARTMENT OF PUBLIC WORKS
DYCL	DOUBLE YELLOW CENTER LINE
ECC	EXTRUDED CONCRETE CURB
ELEV	ELEVATION
EOP	EDGE OF PAVEMENT
EX	EXISTING
EXIST	EXISTING
FDN	FOUNDATION
FFE	FIRST FLOOR ELEVATION
FG	FINISHED GRADE
GRAN	GRANITE
GTD	GRADE TO DRAIN
HP	HIGH POINT
LA	LANDSCAPE AREA
LOD	LIMIT OF DISTURBANCE
LOW	LIMIT OF WORK
LP	LOW POINT
MAHW	MEAN ANNUAL HIGH WATER
MAX	MAXIMUM
MCC	MONOLITHIC CONCRETE CURB
MIN	MINIMUM
NDZ	NO DISTURB ZONE
NIC	NOT IN CONTRACT
NTS	NOT TO SCALE
OHW	ORDINARY HIGH WATER
PCC	PRECAST CONCRETE CURB
PL	PROPERTY LINE
PROP	PROPOSED
R	RADIUS
RA	RIVERFRONT AREA
REM	REMOVE
RET	RETAIN
ROW	RIGHT-OF-WAY
R&D	REMOVE AND DISPOSE
R&R	REMOVE AND RESET
SGE	SLOPED GRANITE EDGING
SWEL	SOLID WHITE EDGE LINE
SWLL	SOLID WHITE LANE LINE
TC	TOP OF CURB
TS	TOP OF SLOPE
TW	TOP OF WALL
TYP	TYPICAL
VGC	VERTICAL GRANITE CURB

Utilities

ABAN	ABANDON
ACCMP	ASPHALT COATED CORRUGATED METAL PIPE
ADJ	ADJUST
CATV	CABLE TV
CIP	CAST IRON PIPE
CMP	CORRUGATED METAL PIPE
CO	CLEANOUT
COND	CONDUIT
CS	CURB STOP AND BOX
DIA	DIAMETER
DCB	DOUBLE CATCH BASIN
DET	DETENTION
DIP	DUCTILE IRON PIPE
DMH	DRAIN MANHOLE
DW	DOMESTIC WATER
EMH	ELECTRIC MANHOLE
FA	FIRE ALARM
FES	FLARED END SECTION
FP	FIRE PROTECTION
FM	FORCE MAIN
FO	FIBER OPTICS
F&C	FRAME AND COVER
F&G	FRAME AND GRATE
GG	GAS GATE
GI	GUTTER INLET
GM	GAS METER
GT	GREASE TRAP
HDPE	HIGH DENSITY POLYETHYLENE PIPE
HH	HAND HOLE
HW	HEADWALL
HYD	HYDRANT
INF	INFILTRATION
INV	INVERT ELEVATION
I=	INVERT ELEVATION
MES	METAL END SECTION
MW	MONITORING WELL
OCS	OUTLET CONTROL STRUCTURE
OHW	OVERHEAD WIRE
PB	PULL BOX
PIV	POST INDICATOR VALVE
PVC	POLYVINYLCHLORIDE PIPE
RCP	REINFORCED CONCRETE PIPE
RD	ROOF DRAIN
R=	RIM ELEVATION
SAS	SOIL ABSORBTION SYSTEM
SCB	SINGLE CATCH BASIN
SLP	SITE LIGHT POLE
SMH	SEWER MANHOLE
SYS	SYSTEM
TMH	TELEPHONE MANHOLE
TSV	TAPPING SLEEVE, VALVE, AND BOX
UD	UNDERDRAIN
UG	UNDERGROUND
UP	UTILITY POLE
WM	WATER METER
WQI	WATER QUALITY INLET
WQS	WATER QUALITY STRUCTURE
WV	WATER VALVE AND BOX

GENERAL NOTES

General Information:

1. CONTRACTOR SHALL NOTIFY "DIG-SAFE" (1-888-344-7233) AT LEAST 72 HOURS BEFORE EXCAVATING.
2. CONTRACTOR SHALL BE RESPONSIBLE FOR SITE SECURITY AND JOB SAFETY, CONSTRUCTION ACTIVITIES SHALL BE IN ACCORDANCE WITH OSHA STANDARDS AND LOCAL REQUIREMENTS.
3. ACCESSIBLE ROUTES, PARKING SPACES, RAMPS, SIDEWALKS, AND WALKWAYS SHALL BE CONSTRUCTED IN CONFORMANCE WITH THE FEDERAL AMERICANS WITH DISABILITIES ACT AND WITH STATE AND LOCAL LAWS AND REGULATIONS (WHICHEVER ARE MORE STRINGENT).
4. AREAS DISTURBED DURING CONSTRUCTION AND NOT RESTORED WITH IMPERVIOUS SURFACES (BUILDINGS, PAVEMENTS, WALKS, ETC.) SHALL RECEIVE 6 INCHES LOAM AND SEED.
5. WITHIN THE LIMITS OF THE BUILDING FOOTPRINT, THE SITE CONTRACTOR SHALL PERFORM EARTHWORK OPERATIONS REQUIRED TO SUBGRADE ELEVATIONS.
6. WORK WITHIN THE LOCAL RIGHTS-OF-WAY SHALL CONFORM TO LOCAL MUNICIPAL STANDARDS. WORK WITHIN SITE RIGHTS-OF-WAY SHALL CONFORM TO THE LATEST EDITION OF THE STATE HIGHWAY DEPARTMENTS STANDARD SPECIFICATIONS FOR HIGHWAYS AND BRIDGES.
7. UPON AWARD OF CONTRACT, CONTRACTOR SHALL MAKE NECESSARY CONSTRUCTION NOTIFICATIONS AND APPLY FOR AND OBTAIN NECESSARY PERMITS, PAY FEES, AND POST BONDS ASSOCIATED WITH THE WORK INDICATED ON THE DRAWINGS, IN THE SPECIFICATIONS, AND IN THE CONTRACT DOCUMENTS. DO NOT CLOSE OR OBSTRUCT ROADWAYS, SIDEWALKS, AND FIRE HYDRANTS, WITHOUT APPROPRIATE PERMITS.
8. TRAFFIC SIGNAGE AND PAVEMENT MARKINGS SHALL CONFORM TO THE MANUAL OF UNIFORM TRAFFIC CONTROL DEVICES (M.U.T.C.D.).
9. AREAS OUTSIDE THE LIMITS OF PROPOSED WORK DISTURBED BY THE CONTRACTOR'S OPERATIONS SHALL BE RESTORED BY THE CONTRACTOR TO THEIR ORIGINAL CONDITION AT THE CONTRACTOR'S EXPENSE.
10. IN THE EVENT THAT SUSPECTED CONTAMINATED SOIL, GROUNDWATER, AND OTHER MEDIA ARE ENCOUNTERED DURING EXCAVATION AND CONSTRUCTION ACTIVITIES BASED ON VISUAL, OLFACTORY, OR OTHER EVIDENCE, THE CONTRACTOR SHALL STOP WORK IN THE VICINITY OF THE SUSPECT MATERIAL TO AVOID FURTHER SPREADING OF THE MATERIAL, AND SHALL NOTIFY THE OWNER IMMEDIATELY SO THAT THE APPROPRIATE TESTING AND SUBSEQUENT ACTION CAN BE TAKEN.
11. CONTRACTOR SHALL PREVENT DUST, SEDIMENT, AND DEBRIS FROM EXITING THE SITE AND SHALL BE RESPONSIBLE FOR CLEANUP, REPAIRS, AND CORRECTIVE ACTION IF SUCH OCCURS.
12. DAMAGE RESULTING FROM CONSTRUCTION LOADS SHALL BE REPAIRED BY THE CONTRACTOR AT NO ADDITIONAL COST TO THE OWNER.
13. CONTRACTOR SHALL CONTROL STORMWATER RUNOFF DURING CONSTRUCTION TO PREVENT ADVERSE IMPACTS TO OFF SITE AREAS, AND SHALL BE RESPONSIBLE TO REPAIR RESULTING DAMAGES, IF ANY, AT NO COST TO OWNER.

Layout and Materials:

1. DIMENSIONS ARE FROM THE FACE OF CURB, FACE OF BUILDING, FACE OF WALL, AND CENTER LINE OF PAVEMENT MARKINGS, UNLESS OTHERWISE NOTED.
2. CURBING SHALL BE PRECAST CONCRETE CURB (PCC) AND CURB RADII SHALL BE THREE FEET (3') WITHIN THE SITE, UNLESS OTHERWISE INDICATED ON THE SITE PLANS.
3. SEE ARCHITECTURAL DRAWINGS FOR EXACT BUILDING DIMENSIONS AND DETAILS CONTIGUOUS TO THE BUILDING, INCLUDING SIDEWALKS, RAMPS, BUILDING ENTRANCES, STAIRWAYS, UTILITY PENETRATIONS, CONCRETE DOOR PADS, COMPACTOR PAD, LOADING DOCKS, BOLLARDS, ETC.
4. PROPOSED BOUNDS AND ANY EXISTING PROPERTY LINE MONUMENTATION DISTURBED DURING CONSTRUCTION SHALL BE SET OR REST BY A PROFESSIONAL LICENSED SURVEYOR.
5. SYMBOLS AND LEGENDS OF PROJECT FEATURES ARE GRAPHIC REPRESENTATIONS AND ARE NOT NECESSARILY SCALED TO THEIR ACTUAL DIMENSIONS OR LOCATIONS ON THE DRAWINGS, THE CONTRACTOR SHALL REFER TO THE DETAIL SHEET DIMENSIONS, MANUFACTURER'S LITERATURE, SHOP DRAWINGS AND FIELD MEASUREMENTS OF SUPPLIED PRODUCTS FOR LAYOUT OF THE PROJECT FEATURES.
6. CONTRACTOR SHALL NOT RELY SOLELY ON ELECTRONIC VERSIONS OF PLANS, SPECIFICATIONS, AND DATA FILES THAT ARE OBTAINED FROM THE DESIGNERS, BUT SHALL VERIFY LOCATION OF PROJECT FEATURES IN ACCORDANCE WITH THE PAPER COPIES OF THE PLANS AND SPECIFICATIONS THAT ARE SUPPLIED AS PART OF THE CONTRACT DOCUMENTS.

Utilities:

1. THE LOCATIONS, SIZES, AND TYPES OF EXISTING UTILITIES ARE SHOWN AS AN APPROXIMATE REPRESENTATION ONLY. THE OWNER OR IT'S REPRESENTATIVES HAVE NOT INDEPENDENTLY VERIFIED THIS INFORMATION AS SHOWN ON THE PLANS. THE UTILITY INFORMATION SHOWN DOES NOT GUARANTEE THE ACTUAL EXISTENCE, SERVICEABILITY, OR OTHER DATA CONCERNING THE UTILITIES, NOR DOES IT GUARANTEE AGAINST THE POSSIBILITY THAT ADDITIONAL UTILITIES MAY BE PRESENT THAT ARE NOT SHOWN ON THE PLANS. PRIOR TO ORDERING MATERIALS AND BEGINNING CONSTRUCTION, THE CONTRACTOR SHALL VERIFY AND DETERMINE THE EXACT LOCATIONS, SIZES, AND ELEVATIONS OF THE POINTS OF ALL CONNECTIONS TO EXISTING UTILITIES AND, SHALL CONFIRM THAT THERE ARE NO INTERFERENCES WITH EXISTING UTILITIES AND THE PROPOSED UTILITY ROUTES, INCLUDING ROUTES WITHIN THE PUBLIC RIGHTS OF WAY.
2. WHERE AN EXISTING UTILITY IS FOUND TO CONFLICT WITH THE PROPOSED WORK, OR EXISTING CONDITIONS DIFFER FORM THOSE SHOWN SUCH THAT THE WORK CANNOT BE COMPLETED AS INTENDED, THE LOCATION, ELEVATION, AND SIZE OF THE UTILITY SHALL BE ACCURATELY DETERMINED WITHOUT DELAY BY THE CONTRACTOR, AND THE INFORMATION FURNISHED IN WRITING TO THE OWNER'S REPRESENTATIVE FOR THE RESOLUTION OF THE CONFLICT AND CONTRACTOR'S FAILURE TO NOTIFY PRIOR TO PERFORMING ADDITIONAL WORK RELEASES OWNER FROM OBLIGATIONS FOR ADDITIONAL PAYMENTS WHICH OTHERWISE MAY BE WARRANTED TO RESOLVE THE CONFLICT.
3. CONTRACTOR SHALL MAKE ARRANGEMENTS FOR AND SHALL BE RESPONSIBLE FOR PAYING FEES FOR POLE RELOCATION AND FOR THE ALTERATION AND ADJUSTMENT OF GAS, ELECTRIC, TELEPHONE, FIRE ALARM, AND ANY OTHER PRIVATE UTILITIES, WHETHER WORK IS PERFORMED BY CONTRACTOR OR BY UTILITIES COMPANY.
4. UTILITY PIPE MATERIALS SHALL BE AS FOLLOWS, UNLESS OTHERWISE NOTED ON THE PLAN:
   - A. STORM DRAINAGE PIPES SHALL BE REINFORCED CONCRETE PIPE (RCP)
   - B. SANITARY SEWER PIPES SHALL BE POLYVINYL CHLORIDE (PVC), SDR 35 SEWER PIPE
   - C. WATER PIPES SHALL BE CEMENT LINED DUCTILE IRON, CLASS 52

Erosion Control:

1. PRIOR TO STARTING ANY OTHER WORK ON THE SITE, THE CONTRACTOR SHALL NOTIFY APPROPRIATE AGENCIES AND SHALL INSTALL EROSION CONTROL MEASURES AS SHOWN ON THE PLANS AND AS IDENTIFIED IN FEDERAL, STATE, AND LOCAL APPROVAL DOCUMENTS PERTAINING TO THIS PROJECT.
2. CONTRACTOR SHALL INSPECT AND MAINTAIN EROSION CONTROL MEASURES, AND REMOVE SEDIMENT THEREFROM ON A WEEKLY BASIS AND WITHIN TWELVE HOURS AFTER EACH STORM EVENT AND DISPOSE OF SEDIMENTS IN AN UPLAND AREA SUCH THAT THEY DO NOT ENCUMBER OTHER DRAINAGE STRUCTURES AND PROTECTED AREAS.
3. CONTRACTOR SHALL BE FULLY RESPONSIBLE TO CONTROL CONSTRUCTION SUCH THAT SEDIMENTATION SHALL NOT AFFECT REGULATORY PROTECTED AREAS, WHETHER SUCH SEDIMENTATION IS CAUSED BY WATER, WIND, OR DIRECT DEPOSIT.
4. CONTRACTOR SHALL PERFORM CONSTRUCTION SEQUENCING SUCH THAT EARTH MATERIALS ARE EXPOSED FOR A MINIMUM OF TIME BEFORE THEY ARE COVERED, SEEDED, OR OTHERWISE STABILIZED TO PREVENT EROSION.
5. UPON COMPLETION OF CONSTRUCTION AND ESTABLISHMENT OF PERMANENT GROUND COVER, CONTRACTOR SHALL REMOVE AND DISPOSE OF EROSION CONTROL MEASURES AND CLEAN SEDIMENT AND DEBRIS FROM ENTIRE DRAINAGE AND SEWER SYSTEMS.

Demolition:

1. CONTRACTOR SHALL REMOVE AND DISPOSE OF EXISTING MANMADE SURFACE FEATURES WITHIN THE LIMIT OF WORK INCLUDING BUILDINGS, STRUCTURES, PAVEMENTS, SLABS, CURBING, FENCES, UTILITY POLES, SIGNS ETC. UNLESS INDICATED OTHERWISE ON THE DRAWINGS, REMOVE AND DISPOSE OF EXISTING UTILITIES, FOUNDATIONS AND UNSUITABLE MATERIAL BENEATH AND FOR A DISTANCE OF 10 FEET BEYOND THE PROPOSED BUILDING FOORTPRINT INCLUDING EXTERIOR COLUMNS.
2. EXISTING UTILITIES SHALL BE TERMINATED, UNLESS OTHERWISE NOTED, IN CONFORMANCE WITH LOCAL, STATE, AND INDIVIDUAL UTILITY COMPANY STANDARD SPECIFICATIONS AND DETAILS. THE CONTRACTOR SHALL COORDINATE UTILITY SERVICE DISCONNECTS WITH THE UTILITY REPRESENTATIVES.
3. CONTRACTOR SHALL DISPOSE OF DEMOLITION DEBRIS IN ACCORDANCE WITH APPLICABLE FEDERAL, STATE AND LOCAL REGULATIONS, ORDINANCES AND STATUES.

Existing Conditions:

1. THE EXISTING CONDITIONS SHOWN ARE BASED ON TOPOGRAPHIC SURVEY PREPARED BY THOMPSON FARLAND, INC. IN MARCH 2013.
2. TOPOGRAPHY: ELEVATIONS ARE BASED ON 1988 NAVD.
3. HORIZONTAL DATUM IS BASED ON MASS. GRID SYSTEM, NAD 1983.
4. ELEVATIONS REFERENCED IN THIS DRAWING REFLECT NAVD 1988 ELEVATIONS. ELEVATION CONVERSIONS TO THE CITY OF QUINCY BASE CAN BE PERFORMED BY APPLYING THE DATUM RELATIONSHIP ADJUSTMENTS SHOWN BELOW.
5. THE LOCATION OF ALL UNDERGROUND UTILITIES SHOWN HEREON ARE APPROXIMATE AND ARE BASED ON THE FIELD LOCATION OF ALL VISIBLE STRUCTURES SUCH AS CATCH BASINS, MANHOLES, WATER GATES, ETC. AND COMPILED FROM PLANS SUPPLIED BY VARIOUS UTILITY COMPANIES AND GOVERNMENT AGENCIES.
6. LUCAS ENVIRONMENTAL, LLC CONDUCTED A SITE INVESTIGATION NEAR THE CENTRE STREET JUNCTION BOX ON NOVEMBER 28, 2012 AND DECEMBER 29, 2012 TO IDENTIFY LOCAL, STATE, AND FEDERALLY REGULATED RESOURCE AREAS.

DATUM RELATIONSHIP

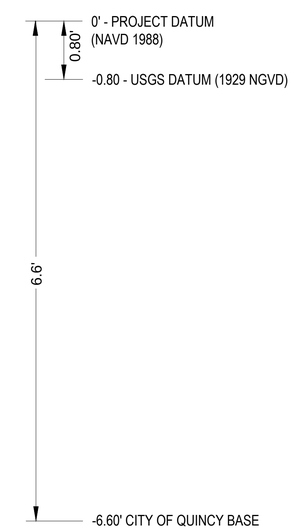

SCALE 1" = 1'

EBI Consulting
environmental | engineering | due diligence
21 B Street | Burlington, MA 01803
Tel: 781.273.2500 | Fax: 781.273.3311
www.ebiconsulting.com

COMMONWEALTH OF MASSACHUSETTS — KARLIS SKULTE — CIVIL — No. 47703 — REGISTERED PROFESSIONAL ENGINEER — 4/17/2013

PREPARED FOR:
City of Quincy
1305 Hancock Street
Quincy, MA 02169
Tel: (617) 376-1362
Fax: (617) 376-1097

THIS DOCUMENT IS THE DESIGN PROPERTY AND COPYRIGHT OF EBI CONSULTING, INC. AND FOR THE EXCLUSIVE USE BY THE TITLE CLIENT. ANY DUPLICATION OR USE WITHOUT EXPRESS WRITTEN CONSENT OF THE CREATOR IS STRICTLY PROHIBITED.

DRAWING SCALES NOTED ARE FOR 22" x 34" SIZE PRINTED MEDIA ONLY. ALL OTHER PRINTED SIZES ARE DEEMED "NOT TO SCALE".

SUBMITTALS

NO.	DATE	DESCRIPTION	BY

DATE: April 17, 2013
PROJECT NUMBER: 16120008

PROJECT TITLE:
Town Brook Base Flow Recapture Improvements
Centre Street
Quincy, Massachusetts 02169
Norfolk County

ISSUED FOR:
Permitting
(Not Approved for Construction)

SHEET TITLE:
Legend & General Notes

SCALE: AS NOTED
DESIGNED BY: MVG | JVC
CHECKED BY: KPS | BKF
SHEET NO: C-2

J:\Fay Spofford & Thorndike\Town Brook Base Flow Recapture\CAD\Planset\Permanent Mitigation Planset\16120008 OSP.dwg

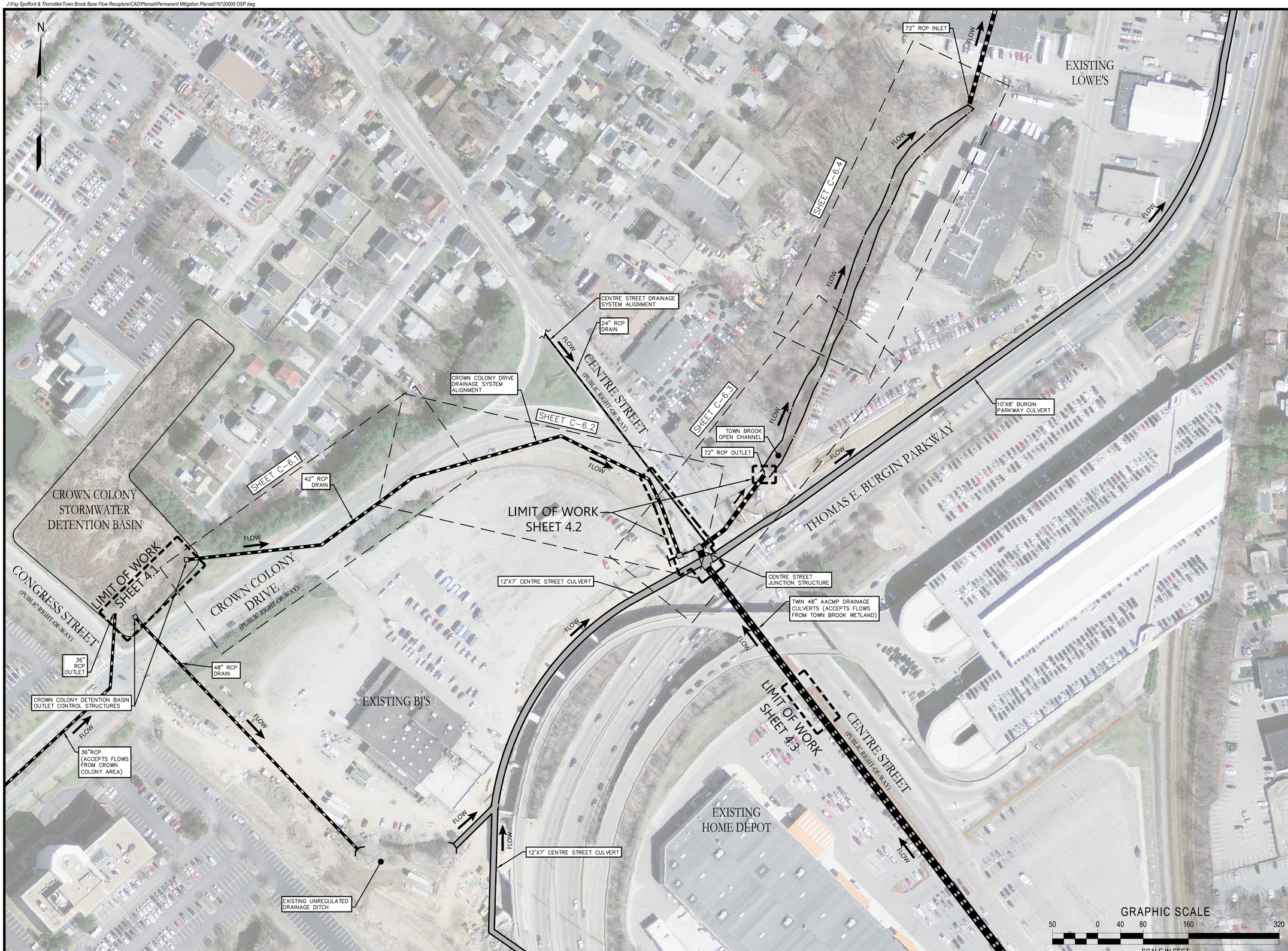

EBI Consulting
environmental | engineering | due diligence
21 B Street | Burlington, MA 01803
Tel: 781.273.2500 | Fax: 781.273.3311
www.ebiconsulting.com

COMMONWEALTH OF MASSACHUSETTS
KARLIS SKULTE
CIVIL
No. 47703
REGISTERED PROFESSIONAL ENGINEER
4/17/2013

PREPARED FOR:
City of Quincy

1305 Hancock Street
Quincy, MA 02169
Tel: (617) 376-1362
Fax: (617) 376-1097

THIS DOCUMENT IS THE DESIGN PROPERTY AND COPYRIGHT OF EBI CONSULTING, INC. AND FOR THE EXCLUSIVE USE BY THE TITLE CLIENT. ANY DUPLICATION OR USE WITHOUT EXPRESS WRITTEN CONSENT OF THE CREATOR IS STRICTLY PROHIBITED.

DRAWING SCALES NOTED ARE FOR 22" x 34" SIZE PRINTED MEDIA ONLY. ALL OTHER PRINTED SIZES ARE DEEMED "NOT TO SCALE".

SUBMITTALS

NO.	DATE	DESCRIPTION	BY

DATE: April 17, 2013

PROJECT NUMBER: 16120008

PROJECT TITLE:
Town Brook Base Flow Recapture Improvements

Centre Street
Quincy, Massachusetts 02169
Norfolk County

ISSUED FOR:
Permitting
(Not Approved for Construction)

SHEET TITLE:
Existing Overall Site Plan & Key Map

SCALE: AS NOTED

DESIGNED BY: MVG | JVC

CHECKED BY: KPS | BKF

SHEET NO: C-3

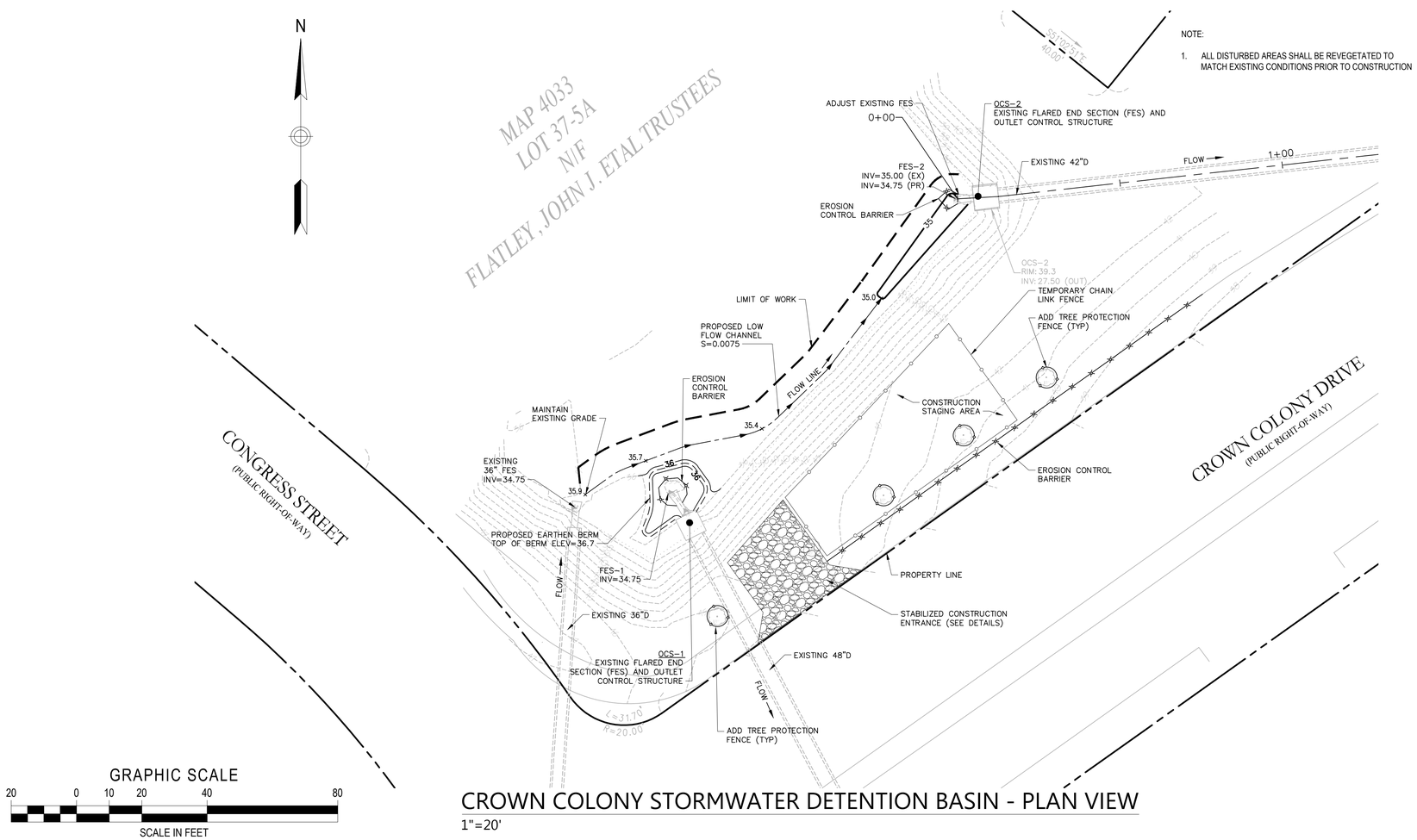

NOTE:

1. ALL DISTURBED AREAS SHALL BE REVEGETATED TO MATCH EXISTING CONDITIONS PRIOR TO CONSTRUCTION

CROWN COLONY STORMWATER DETENTION BASIN - PLAN VIEW

1"=20'

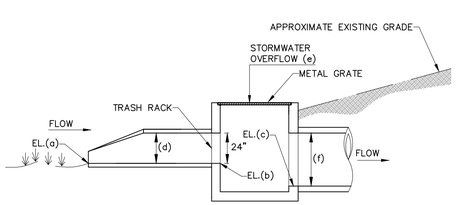

OCS NO.	INV IN (a)	INV OUT (b)	INV OUT (c)	DIA. (d)	RIM (e)	DIA. (f)
1	34.75	33.81	30.16	48"	39.8	48"

OCS-1 SECTION

SCALE: N.T.S.

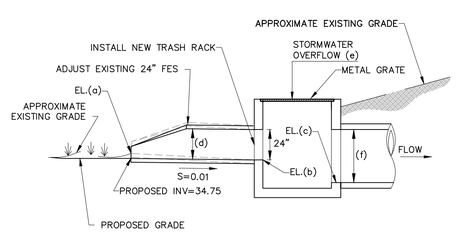

OCS NO.	INV IN (a)	INV OUT (b)	INV OUT (c)	DIA. (d)	RIM (e)	DIA. (f)
2	35.00	34.58	27.50	24"	39.3	42"

OCS-2 SECTION

SCALE: N.T.S.

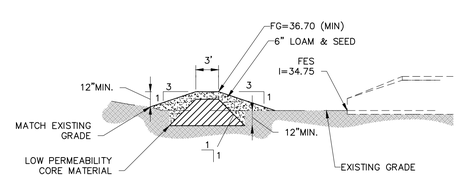

EARTHEN BERM

SCALE: N.T.S.

Table Of Dimensions

SWALE DESIGNATION	W	D
SWALE 1	4'-0"	1'-0"

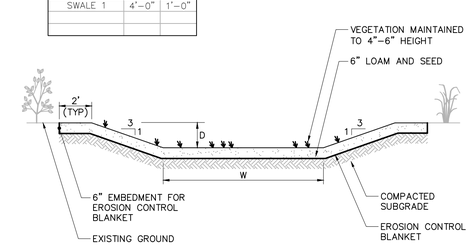

LOW FLOW CHANNEL

SCALE: N.T.S.

EBI Consulting
environmental | engineering | due diligence
21 B Street | Burlington, MA 01803
Tel: 781.273.2500 | Fax: 781.273.3311
www.ebiconsulting.com

COMMONWEALTH OF MASSACHUSETTS
KARLIS SKULTE
CIVIL
No. 47703
REGISTERED PROFESSIONAL ENGINEER
4/17/2013

PREPARED FOR:
City of Quincy

1305 Hancock Street
Quincy, MA 02169
Tel: (617) 376-1362
Fax: (617) 376-1097

THIS DOCUMENT IS THE DESIGN PROPERTY AND COPYRIGHT OF EBI CONSULTING, INC. AND FOR THE EXCLUSIVE USE BY THE TITLE CLIENT. ANY DUPLICATION OR USE WITHOUT EXPRESS WRITTEN CONSENT OF THE CREATOR IS STRICTLY PROHIBITED.

DRAWING SCALES NOTED ARE FOR 22" x 34" SIZE PRINTED MEDIA ONLY. ALL OTHER PRINTED SIZES ARE DEEMED "NOT TO SCALE".

SUBMITTALS

NO.	DATE	DESCRIPTION	BY

DATE: April 17, 2013

PROJECT NUMBER: 16120008

PROJECT TITLE:
Town Brook Base Flow Recapture Improvements

Centre Street
Quincy, Massachusetts 02169
Norfolk County

ISSUED FOR:
Permitting
(Not Approved for Construction)

SHEET TITLE:
Proposed Improvements Crown Colony Stormwater Detention Basin

SCALE: AS NOTED

DESIGNED BY: MVG | JVC

CHECKED BY: KPS | BKF

SHEET NO: C-4.1

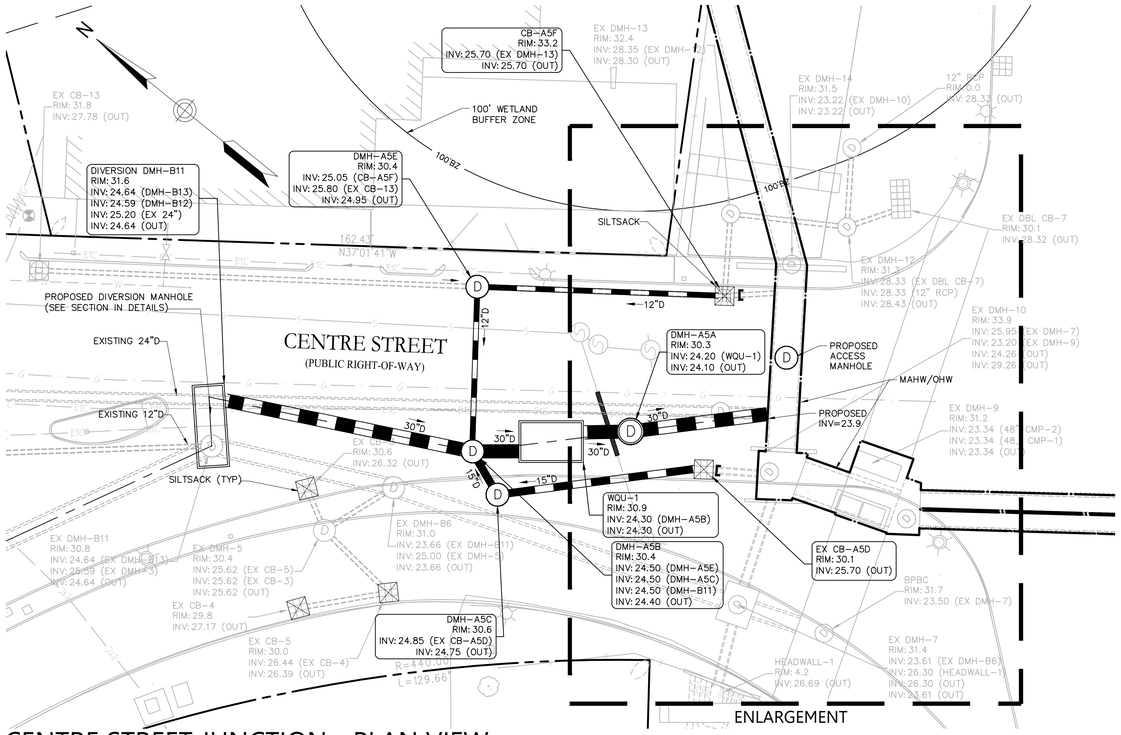

CENTRE STREET JUNCTION - PLAN VIEW

1"=20'

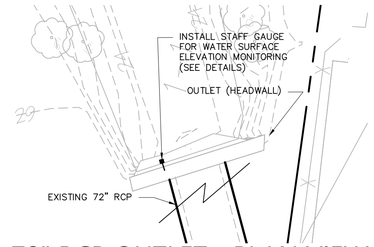

72" RCP OUTLET - PLAN VIEW

1"=10'

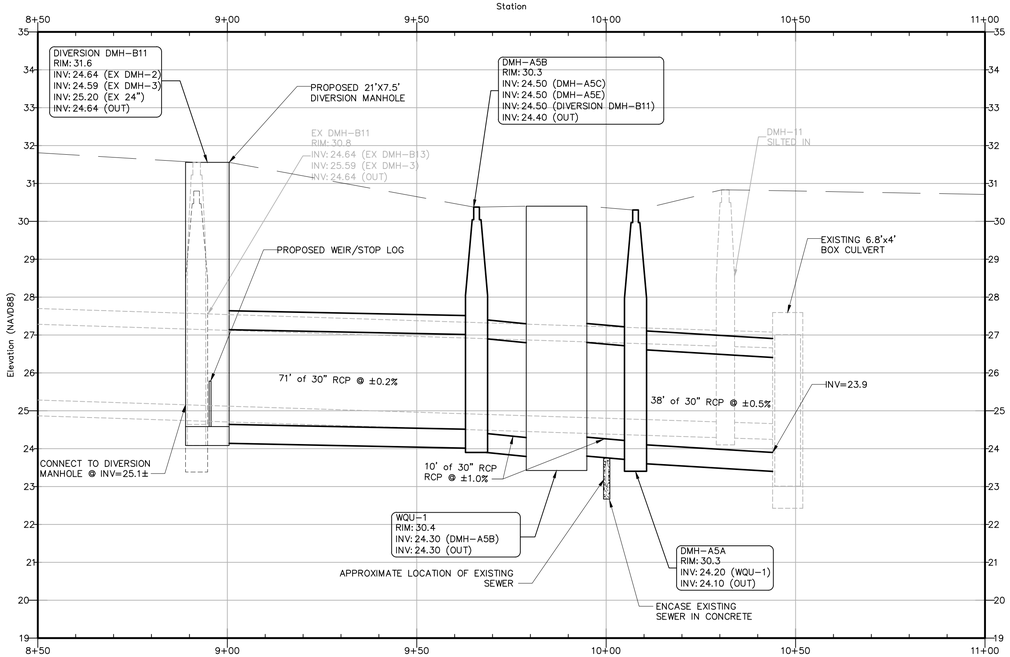

CENTRE STREET JUNCTION - PROFILE VIEW

1"=20' H

1"=2' V

HORIZONTAL SCALE IN FEET

20 0 10 20 40 80

2 0 1 2 4 8

VERTICAL SCALE IN FEET

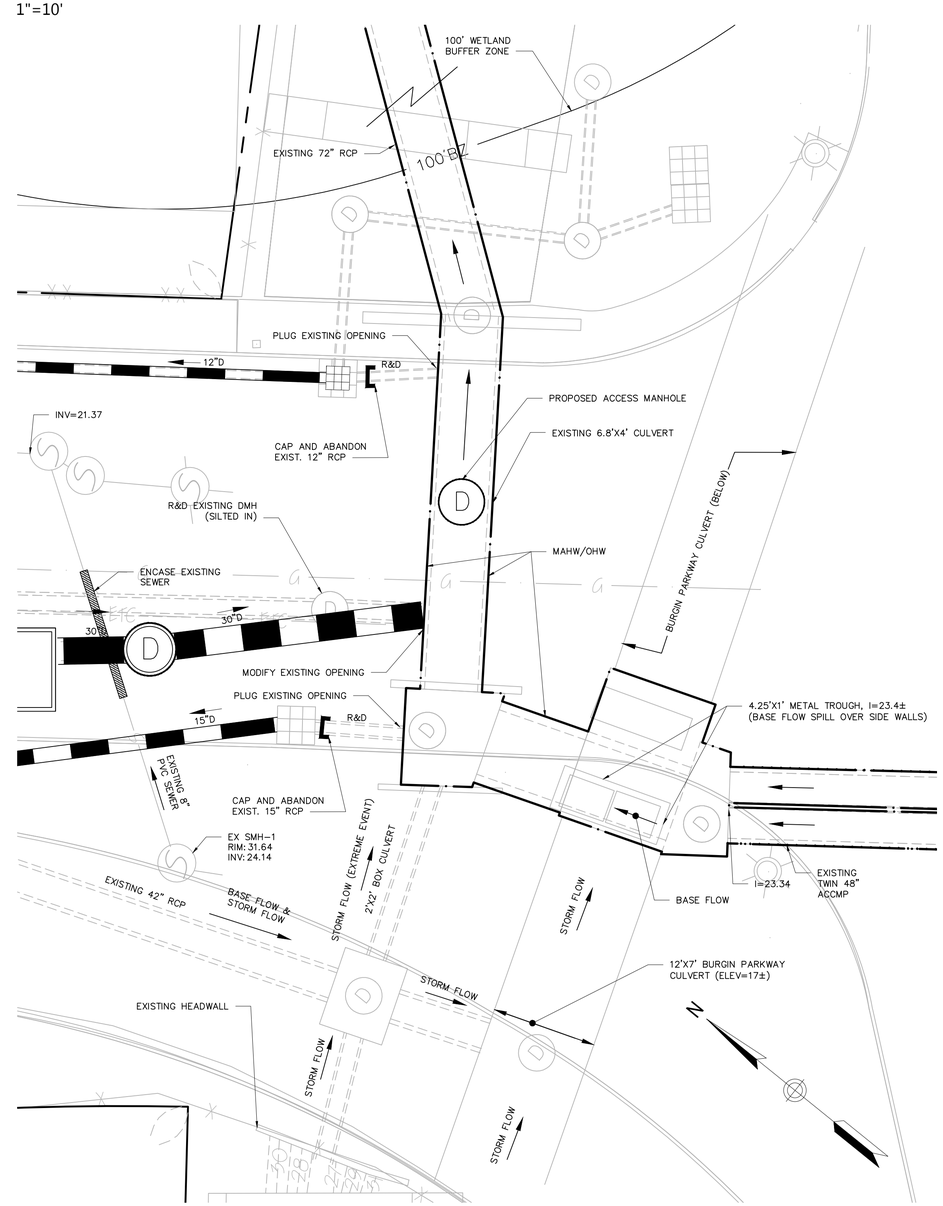

CENTRE STREET JUNCTION ENLARGEMENT - PLAN VIEW

1"=10'

EBI Consulting
environmental | engineering | due diligence
21 B Street | Burlington, MA 01803
Tel: 781.273.2500 | Fax: 781.273.3311
www.ebiconsulting.com

COMMONWEALTH OF MASSACHUSETTS
KARLIS SKULTE
CIVIL
No. 47703
REGISTERED PROFESSIONAL ENGINEER
4/17/2013

PREPARED FOR:
City of Quincy

1305 Hancock Street
Quincy, MA 02169
Tel: (617) 376-1362
Fax: (617) 376-1097

THIS DOCUMENT IS THE DESIGN PROPERTY AND COPYRIGHT OF EBI CONSULTING, INC. AND FOR THE EXCLUSIVE USE BY THE TITLE CLIENT. ANY DUPLICATION OR USE WITHOUT EXPRESS WRITTEN CONSENT OF THE CREATOR IS STRICTLY PROHIBITED.

DRAWING SCALES NOTED ARE FOR 22" x 34" SIZE PRINTED MEDIA ONLY. ALL OTHER PRINTED SIZES ARE DEEMED "NOT TO SCALE".

SUBMITTALS

NO.	DATE	DESCRIPTION	BY

DATE: April 17, 2013

PROJECT NUMBER: 16120008

PROJECT TITLE:
Town Brook Base Flow Recapture Improvements

Centre Street
Quincy, Massachusetts 02169
Norfolk County

ISSUED FOR:
Permitting
(Not Approved for Construction)

SHEET TITLE:
Proposed Improvements Centre Street (North)

SCALE: AS NOTED

DESIGNED BY: MVG | JVC

CHECKED BY: KPS | BKF

SHEET NO: C-4.2

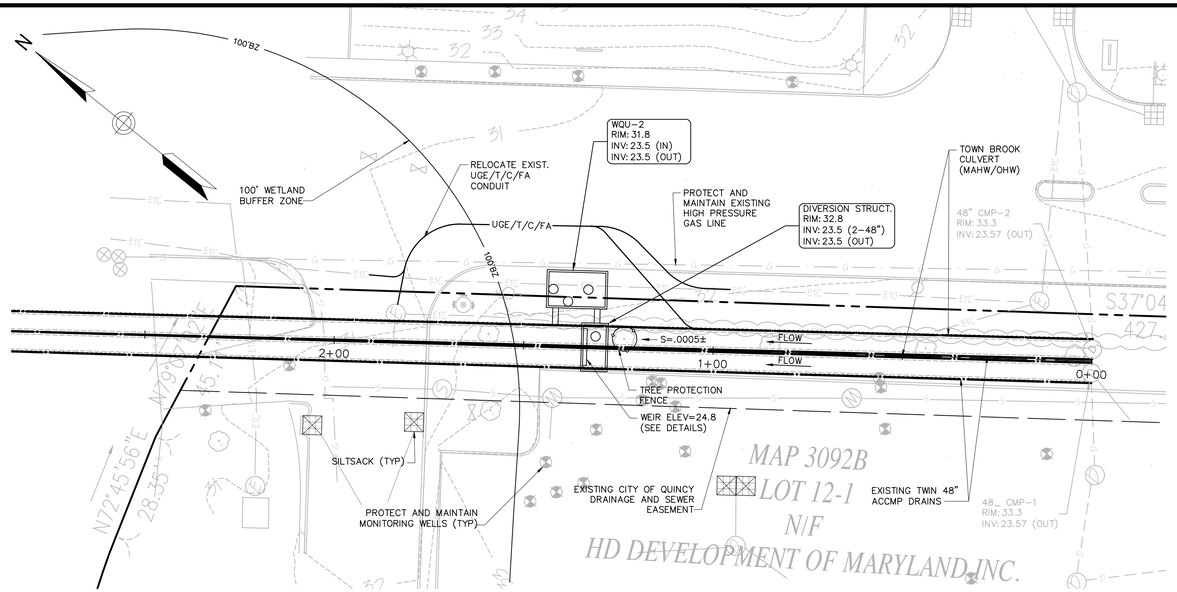

HORIZONTAL SCALE IN FEET

20 0 10 20 40 80

2 0 1 2 4 8

VERTICAL SCALE IN FEET

HOME DEPOT AREA - PLAN VIEW

1"=20'

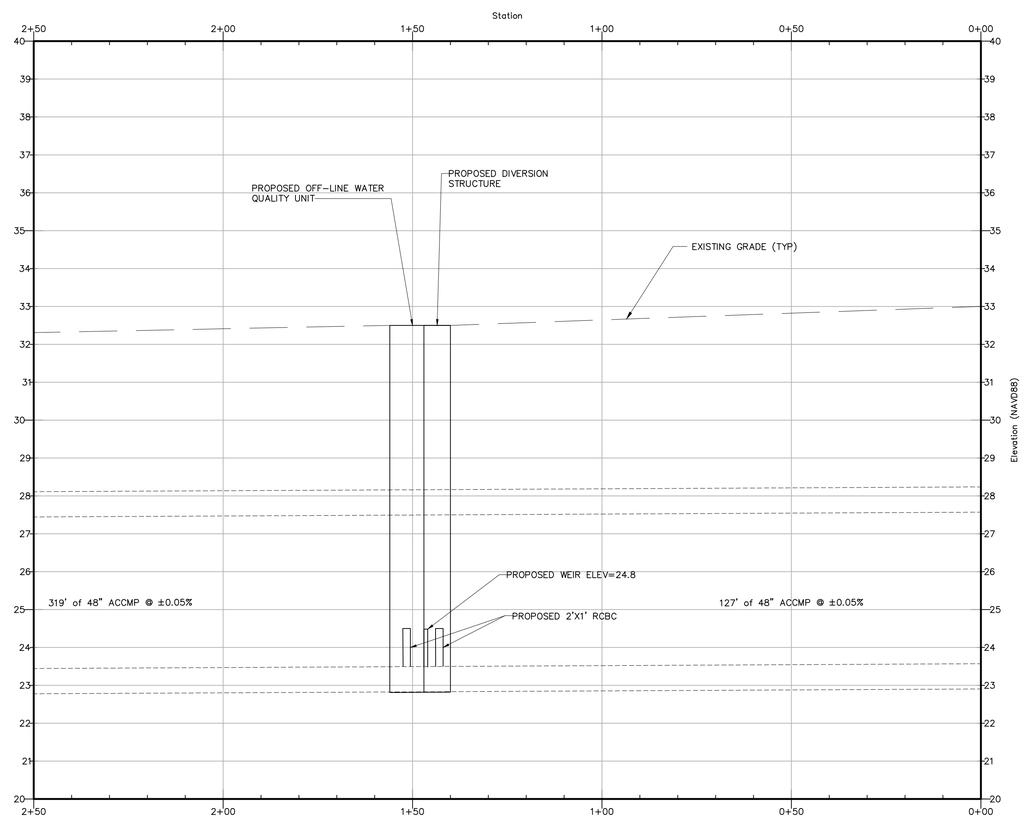

HOME DEPOT AREA - PROFILE VIEW

1"=20' H

1"=2' V

EBI Consulting
environmental | engineering | due diligence
21 B Street | Burlington, MA 01803
Tel: 781.273.2500 | Fax: 781.273.3311
www.ebiconsulting.com

COMMONWEALTH OF MASSACHUSETTS
KARLIS SKULTE
CIVIL
No. 47703
REGISTERED PROFESSIONAL ENGINEER
4/17/2013

PREPARED FOR:
City of Quincy

1305 Hancock Street
Quincy, MA 02169
Tel: (617) 376-1362
Fax: (617) 376-1097

THIS DOCUMENT IS THE DESIGN PROPERTY AND COPYRIGHT OF EBI CONSULTING, INC. AND FOR THE EXCLUSIVE USE BY THE TITLE CLIENT. ANY DUPLICATION OR USE WITHOUT EXPRESS WRITTEN CONSENT OF THE CREATOR IS STRICTLY PROHIBITED.

DRAWING SCALES NOTED ARE FOR 22" x 34" SIZE PRINTED MEDIA ONLY. ALL OTHER PRINTED SIZES ARE DEEMED "NOT TO SCALE".

SUBMITTALS

NO.	DATE	DESCRIPTION	BY

DATE: April 17, 2013

PROJECT NUMBER: 16120008

PROJECT TITLE:
Town Brook Base Flow Recapture Improvements

Centre Street
Quincy, Massachusetts 02169
Norfolk County

ISSUED FOR:
Permitting
(Not Approved for Construction)

SHEET TITLE:
Proposed Improvements Centre Street (South)

SCALE: AS NOTED

DESIGNED BY: MVG | JVC

CHECKED BY: KPS | BKF

SHEET NO: C-4.3

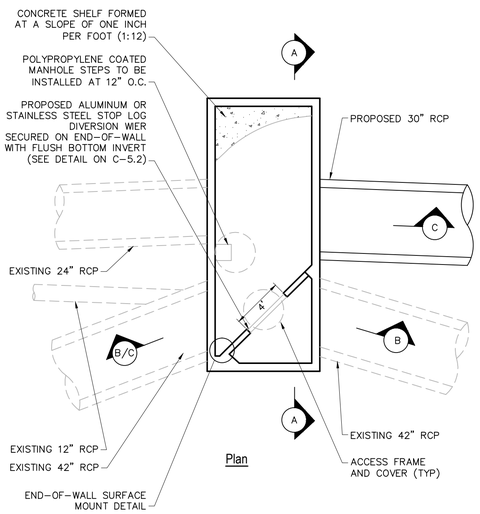

Plan

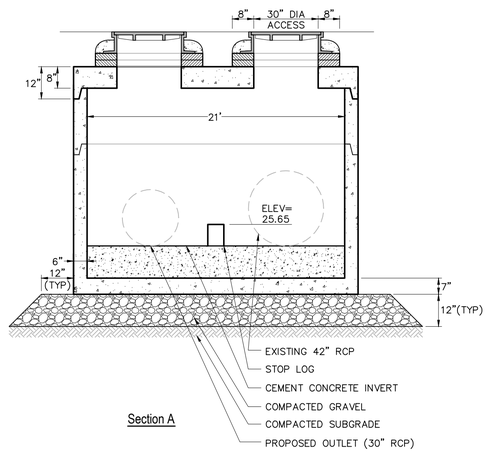

Section A

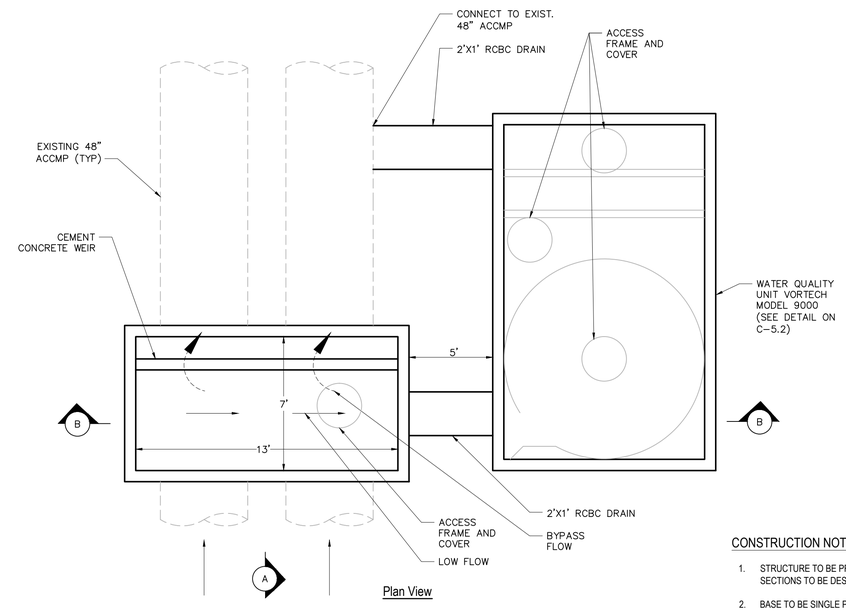

Plan View

CONSTRUCTION NOTES

1. STRUCTURE TO BE PRECAST CONCRETE, MINIMUM 4,000 PSI. ALL SECTIONS TO BE DESIGNED TO MEET OR EXCEED HS-20 LOADING.
2. BASE TO BE SINGLE POUR MONOLITHIC SECTION.

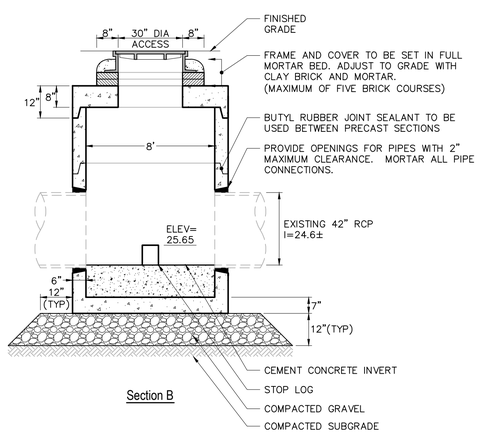

Section B

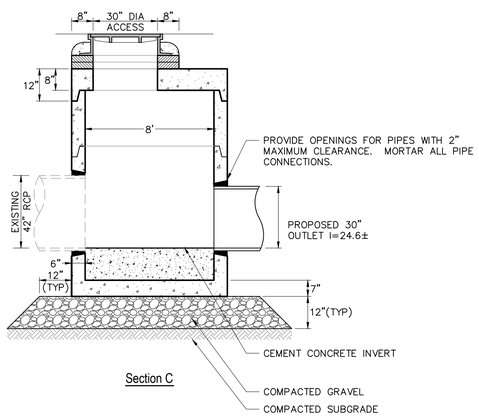

Section C

CONSTRUCTION NOTES

1. STRUCTURE TO BE PRECAST CONCRETE, MINIMUM 4,000 PSI. ALL SECTIONS TO BE DESIGNED TO MEET OR EXCEED HS-20 LOADING.
2. BASE TO BE SINGLE POUR MONOLITHIC SECTION.

DIVERSION MANHOLE 1

SCALE: N.T.S.

C-4.2

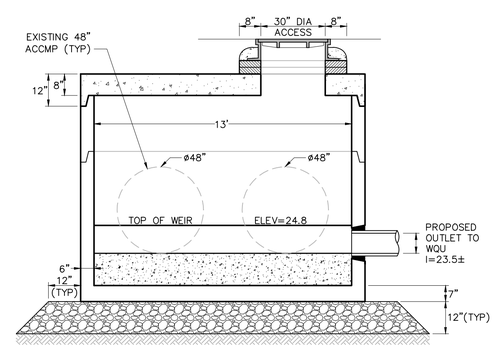

Section B

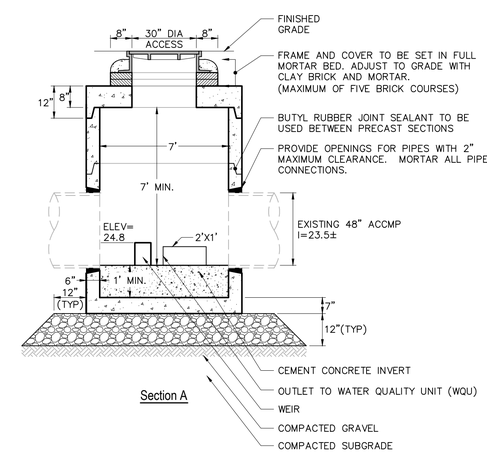

Section A

DIVERSION MANHOLE 2

SCALE: N.T.S.

C-4.3

EBI Consulting
environmental | engineering | due diligence
21 B Street | Burlington, MA 01803
Tel: 781.273.2500 | Fax: 781.273.3311
www.ebiconsulting.com

COMMONWEALTH OF MASSACHUSETTS
KARLIS SKULTE
CIVIL
No. 47703
REGISTERED PROFESSIONAL ENGINEER
4/17/2013

PREPARED FOR:
City of Quincy

1305 Hancock Street
Quincy, MA 02169
Tel: (617) 376-1362
Fax: (617) 376-1097

THIS DOCUMENT IS THE DESIGN PROPERTY AND COPYRIGHT OF EBI CONSULTING, INC. AND FOR THE EXCLUSIVE USE BY THE TITLE CLIENT. ANY DUPLICATION OR USE WITHOUT EXPRESS WRITTEN CONSENT OF THE CREATOR IS STRICTLY PROHIBITED.

DRAWING SCALES NOTED ARE FOR 22" x 34" SIZE PRINTED MEDIA ONLY. ALL OTHER PRINTED SIZES ARE DEEMED "NOT TO SCALE".

SUBMITTALS

NO.	DATE	DESCRIPTION	BY

DATE: April 17, 2013

PROJECT NUMBER: 16120008

PROJECT TITLE:
Town Brook Base Flow Recapture Improvements

Centre Street
Quincy, Massachusetts 02169
Norfolk County

ISSUED FOR:
Permitting
(Not Approved for Construction)

SHEET TITLE:
Site Details 1

SCALE: N.T.S.

DESIGNED BY: MVG/JVC

CHECKED BY: KPS/BKF

SHEET NO: C-5.1

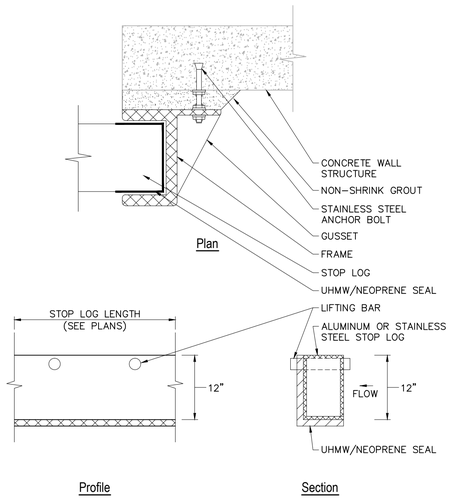

Plan

Profile

Section

CONSTRUCTION NOTES

1. METHOD OF INSTALLATION SHALL BE AS PER MANUFACTURER'S RECOMMENDATIONS.

DIVERSION WEIR

SCALE: N.T.S.

C-4.2

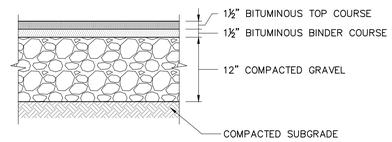

Standard Duty Flexible Pavement

CONSTRUCTION NOTES

1. PAVEMENT SECTIONS ARE SUBJECT TO CHANGE AND WILL BE BASED ON THE RESULTS OF FURTHER GEOTECHNICAL INVESTIGATIONS.

BITUMINOUS CONCRETE PAVEMENT

SCALE: N.T.S.

C-4.2

NOTE:
VORTECHS SYSTEMS INSTALLED IN A BYPASS CONFIGURATION REQUIRE AN UPSTREAM DIVERSION STRUCTURE THAT SHALL BE DETAILED BY THE CONSULTING ENGINEER WITH ELEVATION AND WEIR WIDTH DATA PROVIDED BY CONTECH STORMWATER SOLUTIONS.

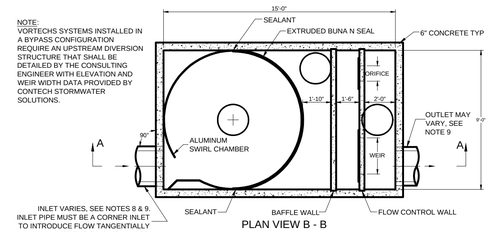

PLAN VIEW B - B

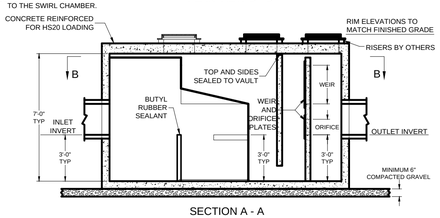

SECTION A - A

NOTES:
1. STORMWATER TREATMENT SYSTEM (SWTS) SHALL HAVE:

   PEAK TREATMENT CAPACITY: 14 CFS
   SEDIMENT STORAGE: 4.8 CU YD
   SEDIMENT CHAMBER DIA: 9' MIN

2. SWTS SHALL BE CONTAINED IN ONE RECTANGULAR STRUCTURE
3. SWTS REMOVAL EFFICIENCY SHALL BE DOCUMENTED BASED ON PARTICLE SIZE
4. SWTS SHALL RETAIN FLOATABLES AND TRAPPED SEDIMENT UP TO AND INCLUDING PEAK TREATMENT CAPACITY
5. SWTS INVERTS IN AND OUT ARE TYPICALLY AT THE SAME ELEVATION
6. SWTS SHALL NOT BE COMPROMISED BY EFFECTS OF DOWNSTREAM TAILWATER
7. SWTS SHALL HAVE NO INTERNAL COMPONENTS THAT OBSTRUCT MAINTENANCE ACCESS
8. INLET PIPE MUST BE PERPENDICULAR TO THE STRUCTURE
9. PIPE ORIENTATION MAY VARY; SEE SITE PLAN FOR SIZE AND LOCATION
10. PURCHASER SHALL NOT BE RESPONSIBLE FOR ASSEMBLY OF UNIT
11. MANHOLE FRAMES AND PERFORATED COVERS SUPPLIED WITH SYSTEM, NOT INSTALLED
12. PURCHASER TO PREPARE EXCAVATION AND PROVIDE CRANE FOR OFF-LOADING AND SETTING AT TIME OF DELIVERY
13. VORTECHS SYSTEMS BY CONTECH STORMWATER SOLUTIONS; PORTLAND, OR (800)548-4667; SCARBOROUGH, ME (877) 907-8676; LINTHICUM, MD (866) 740-3318.

WATER QUALITY UNIT

SCALE: N.T.S. (PROVIDED BY CONTECH STORMWATER SOLUTIONS)

C-4.2

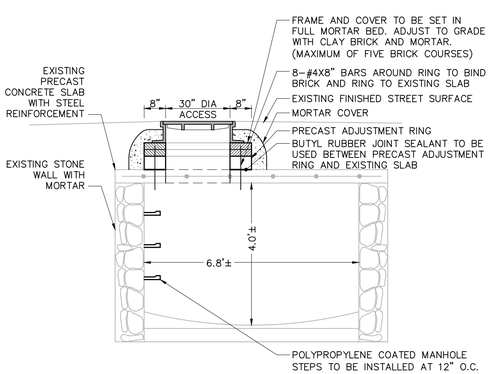

CONSTRUCTION NOTES

1. EXISTING DRAINAGE CULVERT INFORMATION TAKEN FROM THE CENTRE ST./CROWN COLONY DRIVE STREET RECONSTRUCTINO PLANS DATED MARCH 27, 1989 AND FIELD OBSERVATIONS.

ACCESS MANHOLE

SCALE: N.T.S.

C-4.2

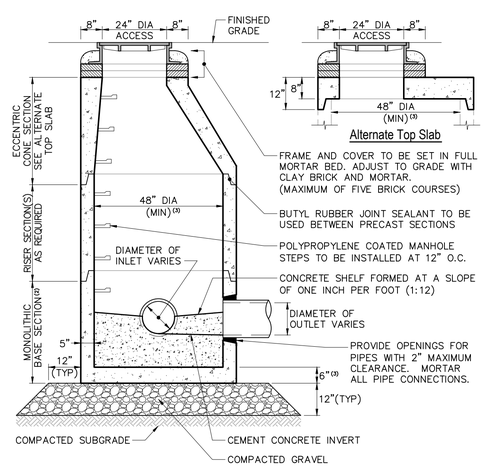

CONSTRUCTION NOTES

1. STRUCTURE TO BE PRECAST CONCRETE, MINIMUM 4,000 PSI. ALL SECTIONS TO BE DESIGNED TO MEET OR EXCEED HS-20 LOADING.
2. BASE TO BE SINGLE POUR MONOLITHIC SECTION.
3. 60" (5'-0") INSIDE DIAMETER FOR ALL MANHOLE DEPTHS GREATER THAN 20 FEET. 6" MINIMUM WALL THICKNESS AND 7" MINIMUM BASE THICKNESS FOR 5'-0" DIAMETER PRECAST MANHOLE.

DRAIN MANHOLE (DMH)

SCALE: N.T.S.

C-4.2

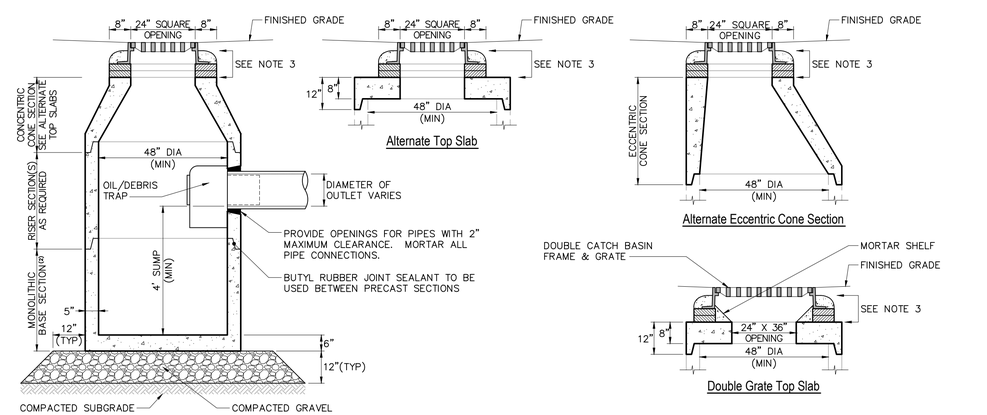

CONSTRUCTION NOTES

1. STRUCTURE TO BE PRECAST CONCRETE, MINIMUM 4,000 PSI. ALL SECTIONS TO BE DESIGNED TO MEET OR EXCEED HS-20 LOADING.
2. BASE TO BE SINGLE POUR MONOLITHIC SECTION.
3. FRAME AND GRATE TO BE SET IN FULL MORTAR BED. ADJUST TO GRADE WITH CLAY BRICK AND MORTAR. MAXIMUM OF FIVE BRICK COURSES.
4. PROVIDE DOGHOUSE OPENING FOR PIPES WITH 2" MAXIMUM CLEARANCE TO OUTSIDE OF PIPE. TOP SLAB SHALL NOT REST DIRECTLY ON THE PIPE. GROUT ALL CONNECTIONS WITH NON-SHRINK GROUT.

CATCH BASIN WITH OIL / DEBRIS TRAP

SCALE: N.T.S.

C-4.2

EBI Consulting
environmental | engineering | due diligence
21 B Street | Burlington, MA 01803
Tel: 781.273.2500 | Fax: 781.273.3311
www.ebiconsulting.com

COMMONWEALTH OF MASSACHUSETTS
KARLIS SKULTE
CIVIL
No. 47703
REGISTERED PROFESSIONAL ENGINEER
4/17/2013

PREPARED FOR:
City of Quincy

1305 Hancock Street
Quincy, MA 02169
Tel: (617) 376-1362
Fax: (617) 376-1097

THIS DOCUMENT IS THE DESIGN PROPERTY AND COPYRIGHT OF EBI CONSULTING, INC. AND FOR THE EXCLUSIVE USE BY THE TITLE CLIENT. ANY DUPLICATION OR USE WITHOUT EXPRESS WRITTEN CONSENT OF THE CREATOR IS STRICTLY PROHIBITED.

DRAWING SCALES NOTED ARE FOR 22" x 34" SIZE PRINTED MEDIA ONLY. ALL OTHER PRINTED SIZES ARE DEEMED "NOT TO SCALE".

SUBMITTALS

NO.	DATE	DESCRIPTION	BY

DATE: April 17, 2013

PROJECT NUMBER: 16120008

PROJECT TITLE:
Town Brook Base Flow Recapture Improvements

Centre Street
Quincy, Massachusetts 02169
Norfolk County

ISSUED FOR:
Permitting
(Not Approved for Construction)

SHEET TITLE:
Site Details 2

SCALE: N.T.S.

DESIGNED BY: MVG/JVC

CHECKED BY: KPS/BKF

SHEET NO: C-5.2

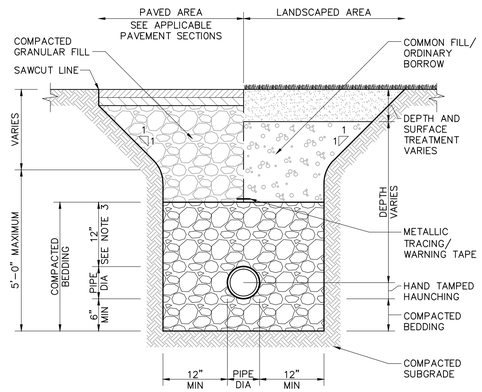

CONSTRUCTION NOTES

1. WHERE UTILITY TRENCHES ARE CONSTRUCTED THROUGH DETENTION BASIN BERMS OR OTHER SUCH SPECIAL SECTIONS, PLACE TRENCH BACKFILL WITH MATERIALS SIMILAR TO THE SPECIAL SECTION REQUIREMENTS.
2. USE METALLIC TRACING/WARNING TAPE OVER ALL PIPES.
3. FOR HIGH DENSITY POLYETHYLENE (HDPE) PIPE, DIMENSION IS 24 INCHES.

UTILITY TRENCH

SCALE: N.T.S.

C-4.2

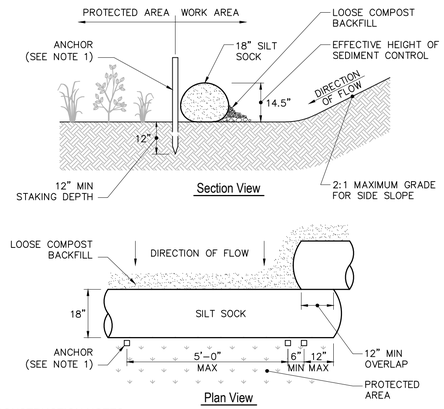

CONSTRUCTION NOTES

1. ANCHOR TO BE A 2" X 2" X 36" HARD WOOD STAKE, OR APPROVED EQUAL.
2. COMPOST FOR SILT SOCK FILL MATERIAL TO BE PROVIDED BY THE MANUFACTURER IN CONJUNCTION WITH THE ENGINEER TO PROVIDE THE REQUIRED REMOVAL OF SEDIMENT OR OTHER POLLUTANTS FROM RUNOFF.
3. COMPOST MATERIAL SHALL BE DISPERSED ON SITE, AS DETERMINED BY THE LOCAL CONSERVATION AGENT OR THE DESIGN ENGINEER.
4. SILT SOCK SHALL BE INSPECTED AT LEAST ONCE EVERY SEVEN DAYS OR PER LOCAL AND STATE REQUIREMENTS. REPAIR OR REPLACEMENT SHALL BE PERFORMED PROMPTLY, AS NEEDED.
5. METHOD OF INSTALLATION SHALL BE AS PER MANUFACTURER'S RECOMMENDATIONS.

SILT SOCK (EROSION CONTROL BARRIER)

SCALE: N.T.S.

C-4.1

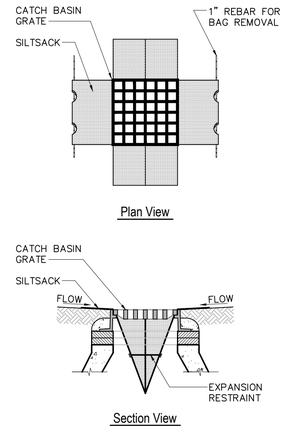

CONSTRUCTION NOTES

1. INSTALL SILT SACKS IN ALL CATCH BASINS WHERE INDICATED ON THE SITE PLANS BEFORE COMMENCING WORK OR IN PAVED AREAS AFTER BINDER COURSE IS PLACED AND HAY BALES HAVE BEEN REMOVED.
2. GRATE TO BE PLACED OVER SILT SACK.
3. SILT SACKS SHALL BE INSPECTED PERIODICALLY AND AFTER ALL STORM EVENTS. CLEANING OR REPLACEMENT SHALL BE PERFORMED AS NEEDED. MAINTAIN SILT SACKS UNTIL UPSTREAM AREAS HAVE BEEN PERMANENTLY STABILIZED.

SILT SACK

SCALE: N.T.S.

C-4.2

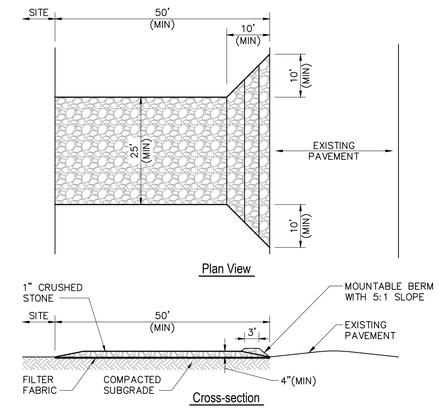

CONSTRUCTION NOTES

1. ENTRANCE WIDTH SHALL BE A TWENTY-FIVE (25) FOOT MINIMUM, BUT NOT LESS THAN THE FULL WIDTH AT POINTS WHERE INGRESS OR EGRESS OCCURS.
2. THE ENTRANCE SHALL BE MAINTAINED IN A CONDITION WHICH SHALL PREVENT TRACKING OR FLOWING OF SEDIMENT ONTO PUBLIC RIGHTS-OF-WAY. THIS MAY REQUIRE PERIODIC TOP DRESSING WITH ADDITIONAL STONE AS CONDITIONS DEMAND AND REPAIR OR CLEANOUT OF ANY MEASURES USED TO TRAP SEDIMENT. ALL SEDIMENT SPILLED, DROPPED, WASHED OR TRACKED ONTO PUBLIC RIGHTS-OF-WAY MUST BE REMOVED IMMEDIATELY. PERIODIC INSPECTION AND MAINTENANCE SHALL BE PROVIDED AS NEEDED.
3. STABILIZED CONSTRUCTION ENTRANCE SHALL BE REMOVED PRIOR TO FINAL FINISHED MATERIALS BEING INSTALLED.

STABILIZED CONSTRUCTION EXIT

SCALE: N.T.S.

C-4.1

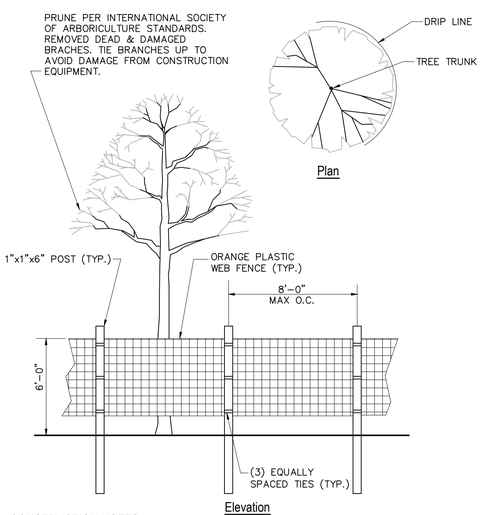

CONSTRUCTION NOTES

1. INSTALL TREE PROTECTION FENCE AT THE DRIIP LINE OF EXISTING TREES TO REMAIN
2. IF DRIP LINES OVERLAP, INSTALL CONTINUOUS PROTECTION FENCE FOR MULTIPLE EXISTING TREE TO REMAIN.

TREE PROTECTION FENCE

SCALE: N.T.S.

C-4.1

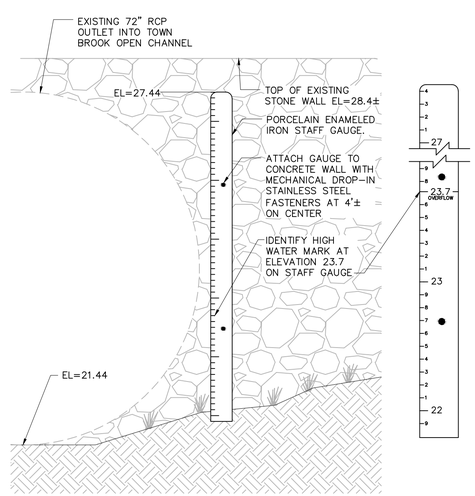

CONSTRUCTION NOTES

1. CONTRACTOR TO SET STAFF GAUGE TO REFLECT ACTUAL ELEVATIONS PER NAVD 88 WITH ASSISTANCE OF SURVEYOR TO PROPERLY CALIBRATE FINAL VERTICAL LOCATION.

STAFF GUAGE DETAIL

SCALE: N.T.S.

C-6.3

EBI Consulting
environmental | engineering | due diligence
21 B Street | Burlington, MA 01803
Tel: 781.273.2500 | Fax: 781.273.3311
www.ebiconsulting.com

COMMONWEALTH OF MASSACHUSETTS
KARLIS SKULTE
CIVIL
No. 47703
REGISTERED PROFESSIONAL ENGINEER
4/17/2013

PREPARED FOR:
City of Quincy
1305 Hancock Street
Quincy, MA 02169
Tel: (617) 376-1362
Fax: (617) 376-1097

THIS DOCUMENT IS THE DESIGN PROPERTY AND COPYRIGHT OF EBI CONSULTING, INC. AND FOR THE EXCLUSIVE USE BY THE TITLE CLIENT. ANY DUPLICATION OR USE WITHOUT EXPRESS WRITTEN CONSENT OF THE CREATOR IS STRICTLY PROHIBITED.

DRAWING SCALES NOTED ARE FOR 22" x 34" SIZE PRINTED MEDIA ONLY. ALL OTHER PRINTED SIZES ARE DEEMED "NOT TO SCALE".

SUBMITTALS

NO.	DATE	DESCRIPTION	BY

DATE: April 17, 2013
PROJECT NUMBER: 16120008

PROJECT TITLE:
Town Brook Base Flow Recapture Improvements
Centre Street
Quincy, Massachusetts 02169
Norfolk County

ISSUED FOR:
Permitting
(Not Approved for Construction)

SHEET TITLE:
Site Details 3

SCALE: N.T.S.
DESIGNED BY: MVG/JVC
CHECKED BY: KPS/BKF
SHEET NO: C-5.3

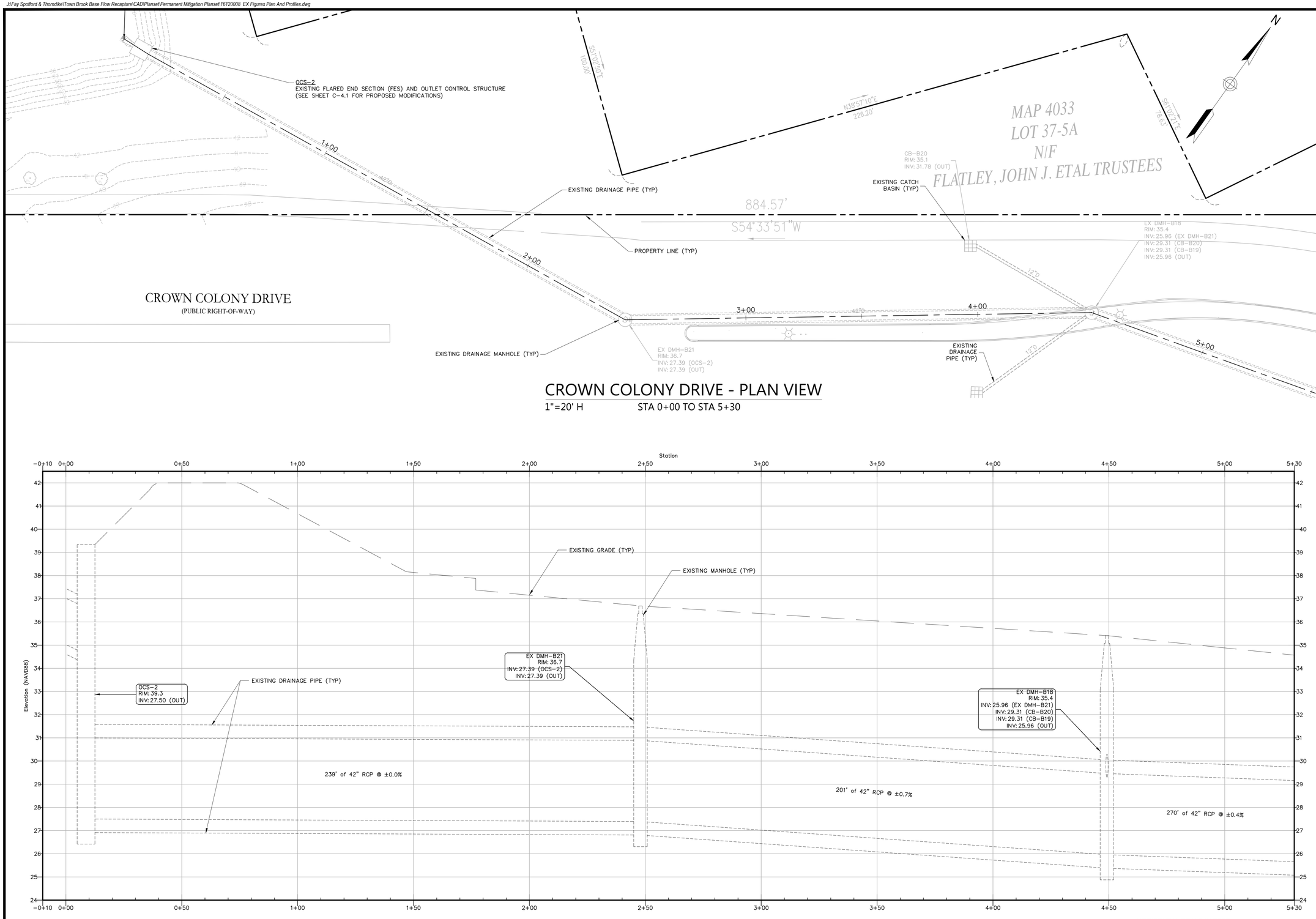

CROWN COLONY DRIVE - PLAN VIEW

1"=20' H STA 0+00 TO STA 5+30

CROWN COLONY DRIVE - PROFILE VIEW

1"=20' H STA 0+00 TO STA 5+30
1"=2' V

HORIZONTAL SCALE IN FEET: 20 0 10 20 40 80
VERTICAL SCALE IN FEET: 2 0 1 2 4 8

EBI Consulting
environmental | engineering | due diligence
21 B Street | Burlington, MA 01803
Tel: 781.273.2500 | Fax: 781.273.3311
www.ebiconsulting.com

COMMONWEALTH OF MASSACHUSETTS
KARLIS SKULTE
CIVIL
No. 47703
REGISTERED PROFESSIONAL ENGINEER
4/17/2013

PREPARED FOR:
City of Quincy
1305 Hancock Street
Quincy, MA 02169
Tel: (617) 376-1362
Fax: (617) 376-1097

THIS DOCUMENT IS THE DESIGN PROPERTY AND COPYRIGHT OF EBI CONSULTING, INC. AND FOR THE EXCLUSIVE USE BY THE TITLE CLIENT. ANY DUPLICATION OR USE WITHOUT EXPRESS WRITTEN CONSENT OF THE CREATOR IS STRICTLY PROHIBITED.

DRAWING SCALES NOTED ARE FOR 22" x 34" SIZE PRINTED MEDIA ONLY. ALL OTHER PRINTED SIZES ARE DEEMED "NOT TO SCALE".

SUBMITTALS

NO.	DATE	DESCRIPTION	BY

DATE: April 17, 2013
PROJECT NUMBER: 16120008

PROJECT TITLE:
Town Brook Base Flow Recapture Improvements
Centre Street
Quincy, Massachusetts 02169
Norfolk County

ISSUED FOR:
Permitting
(Not Approved for Construction)

SHEET TITLE:
Existing Plan & Profile 1
Crown Colony Drive

SCALE: AS NOTED
DESIGNED BY: MVG | JVC
CHECKED BY: KPS | BKF

SHEET NO: C-6.1

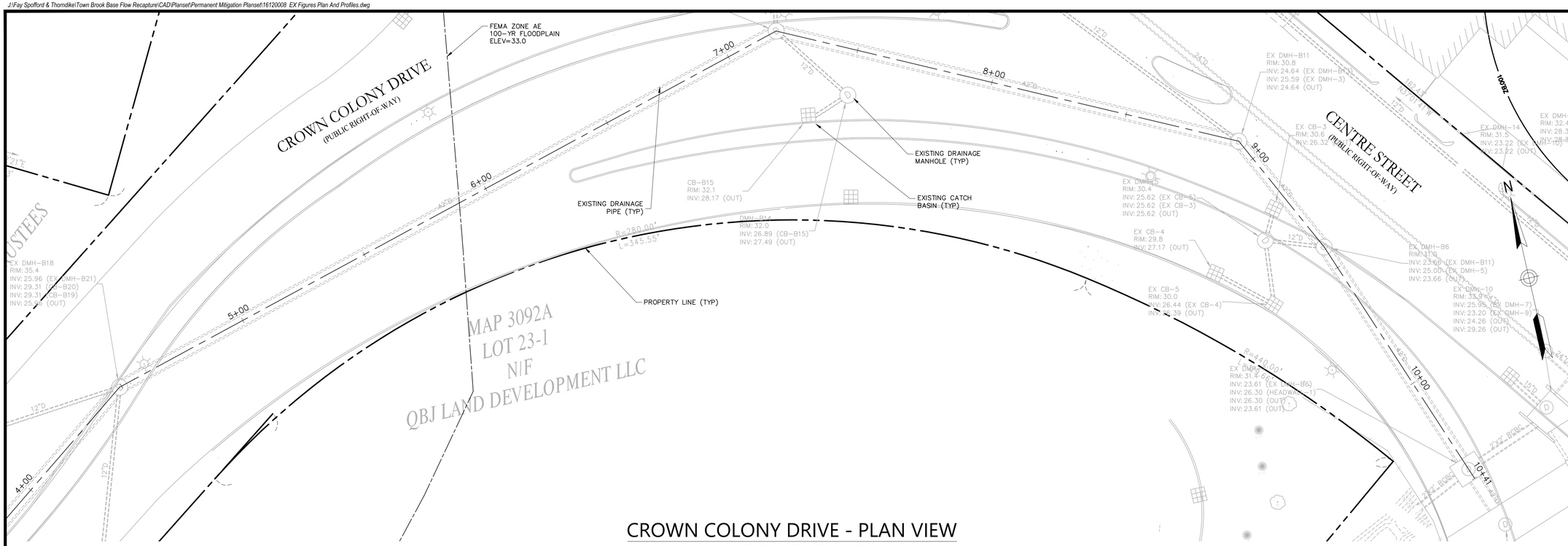

CROWN COLONY DRIVE - PLAN VIEW

1"=20' H STA 5+30 TO STA 10+70

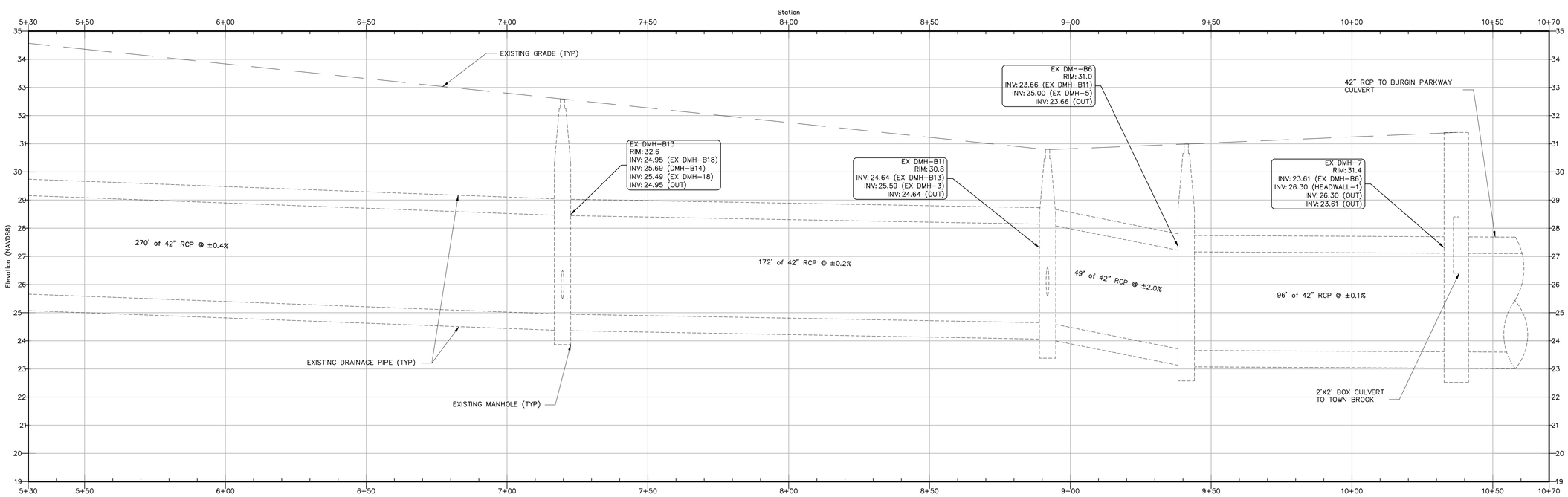

CROWN COLONY DRIVE - PROFILE VIEW

1"=20' H STA 5+30 TO STA 10+70
1"=2' V

HORIZONTAL SCALE IN FEET
20 0 10 20 40 80

VERTICAL SCALE IN FEET
2 0 1 2 4 8

EBI Consulting
environmental | engineering | due diligence
21 B Street | Burlington, MA 01803
Tel: 781.273.2500 | Fax: 781.273.3311
www.ebiconsulting.com

COMMONWEALTH OF MASSACHUSETTS
KARLIS SKULTE
CIVIL
No. 47703
REGISTERED PROFESSIONAL ENGINEER
4/17/2013

PREPARED FOR:
City of Quincy
1305 Hancock Street
Quincy, MA 02169
Tel: (617) 376-1362
Fax: (617) 376-1097

THIS DOCUMENT IS THE DESIGN PROPERTY AND COPYRIGHT OF EBI CONSULTING, INC. AND FOR THE EXCLUSIVE USE BY THE TITLE CLIENT. ANY DUPLICATION OR USE WITHOUT EXPRESS WRITTEN CONSENT OF THE CREATOR IS STRICTLY PROHIBITED.

DRAWING SCALES NOTED ARE FOR 22" x 34" SIZE PRINTED MEDIA ONLY. ALL OTHER PRINTED SIZES ARE DEEMED "NOT TO SCALE".

SUBMITTALS

NO.	DATE	DESCRIPTION	BY

DATE: April 17, 2013
PROJECT NUMBER: 16120008

PROJECT TITLE:
Town Brook Base Flow Recapture Improvements
Centre Street
Quincy, Massachusetts 02169
Norfolk County

ISSUED FOR:
Permitting
(Not Approved for Construction)

SHEET TITLE:
Existing Plan & Profile 2
Crown Colony Drive/
Centre Street

SCALE: AS NOTED
DESIGNED BY: MVG | JVC
CHECKED BY: KPS | BKF

SHEET NO: C-6.2

J:\Fay Spofford & Thorndike\Town Brook Base Flow Recapture\CAD\Planset\Permanent Mitigation Planset\16120008 EX Figures Plan And Profiles.dwg

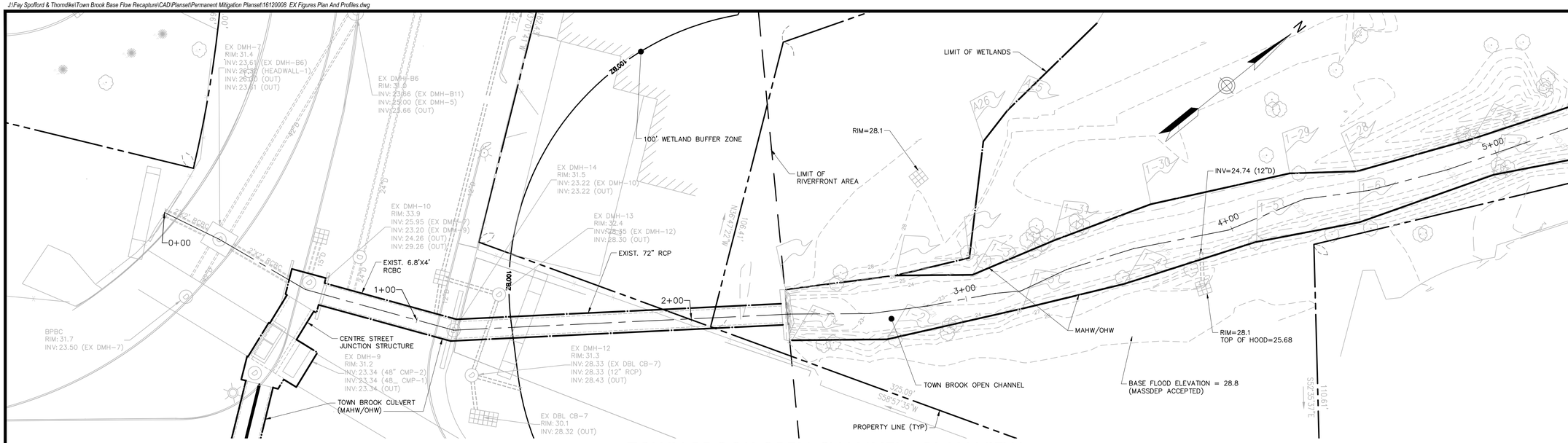

TOWN BROOK OPEN CHANNEL - PLAN VIEW

1"=20' H STA 0+00 TO STA 5+00

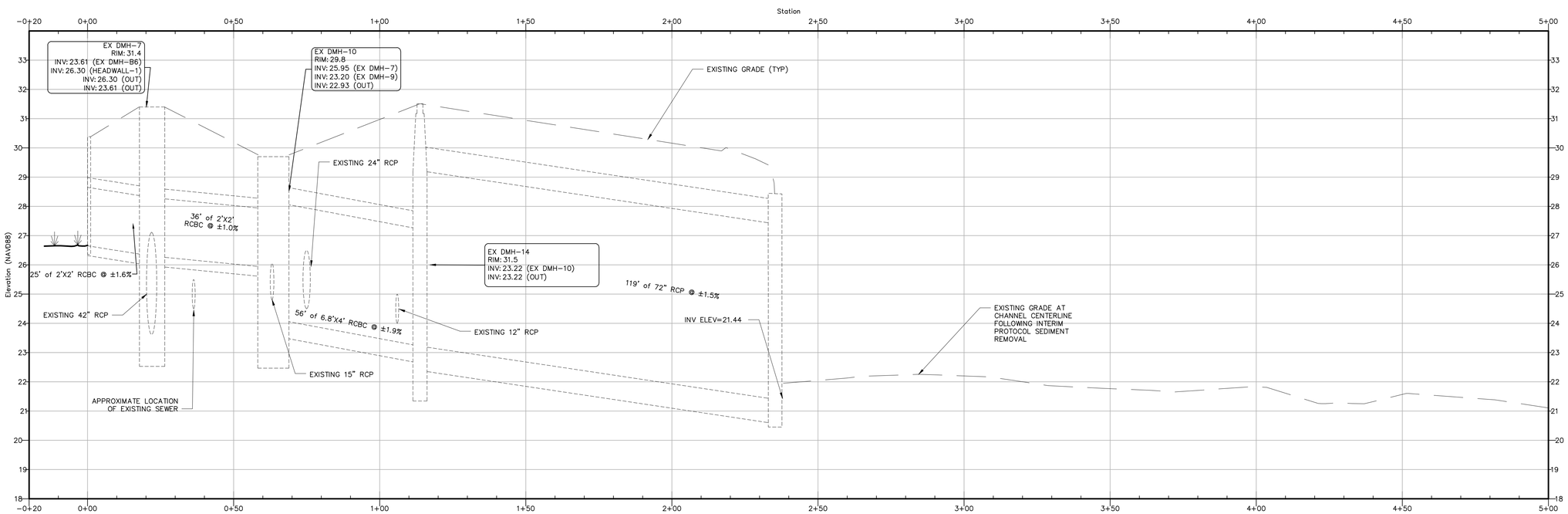

TOWN BROOK OPEN CHANNEL - PROFILE VIEW

1"=20' H STA 0+00 TO STA 5+00
1"=2' V

HORIZONTAL SCALE IN FEET
20 0 10 20 40 80
2 0 1 2 4 8
VERTICAL SCALE IN FEET

EBI Consulting
environmental | engineering | due diligence
21 B Street | Burlington, MA 01803
Tel: 781.273.2500 | Fax: 781.273.3311
www.ebiconsulting.com

COMMONWEALTH OF MASSACHUSETTS
KARLIS SKULTE
CIVIL
No. 47703
REGISTERED PROFESSIONAL ENGINEER
4/17/2013

PREPARED FOR:
City of Quincy
1305 Hancock Street
Quincy, MA 02169
Tel: (617) 376-1362
Fax: (617) 376-1097

THIS DOCUMENT IS THE DESIGN PROPERTY AND COPYRIGHT OF EBI CONSULTING, INC. AND FOR THE EXCLUSIVE USE BY THE TITLE CLIENT. ANY DUPLICATION OR USE WITHOUT EXPRESS WRITTEN CONSENT OF THE CREATOR IS STRICTLY PROHIBITED.

DRAWING SCALES NOTED ARE FOR 22" x 34" SIZE PRINTED MEDIA ONLY. ALL OTHER PRINTED SIZES ARE DEEMED "NOT TO SCALE".

SUBMITTALS

NO.	DATE	DESCRIPTION	BY

DATE: April 17, 2013
PROJECT NUMBER: 16120008

PROJECT TITLE:
Town Brook Base Flow Recapture Improvements
Centre Street
Quincy, Massachusetts 02169
Norfolk County

ISSUED FOR:
Permitting
(Not Approved for Construction)

SHEET TITLE:
Existing Plan & Profile 3 Centre Street/Town Brook Open Channel

SCALE: AS NOTED
DESIGNED BY: MVG | JVC
CHECKED BY: KPS | BKF
SHEET NO: C-6.3

J:\Fay Spofford & Thorndike\Town Brook Base Flow Recapture\CAD\Planset\Permanent Mitigation Planset\16120008 EX Figures Plan And Profiles.dwg

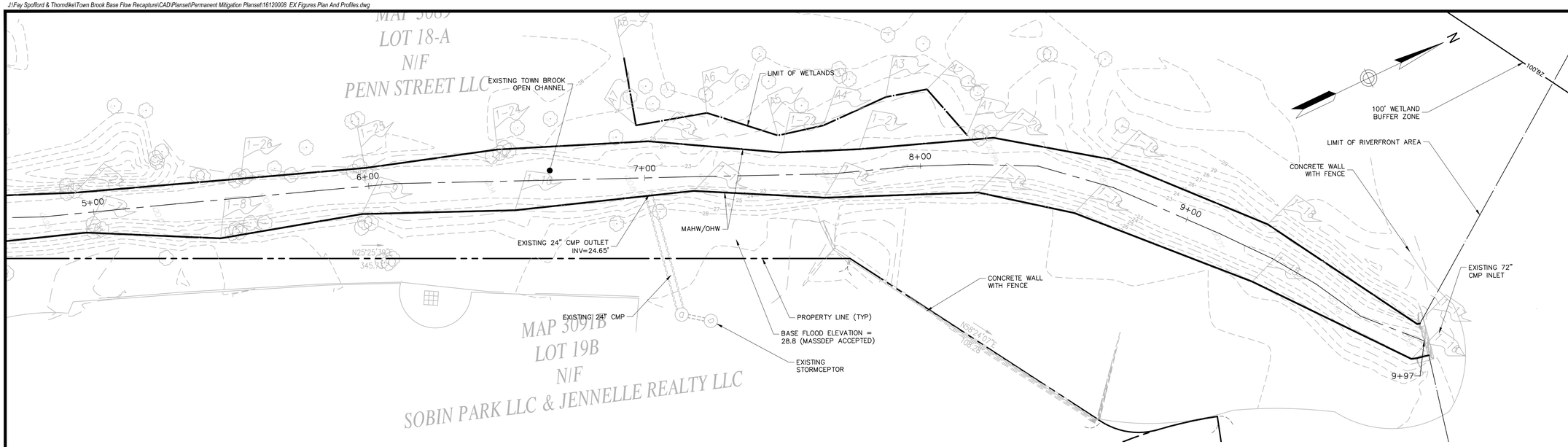

TOWN BROOK OPEN CHANNEL - PLAN VIEW

1"=20' H STA 5+00 TO STA 10+70

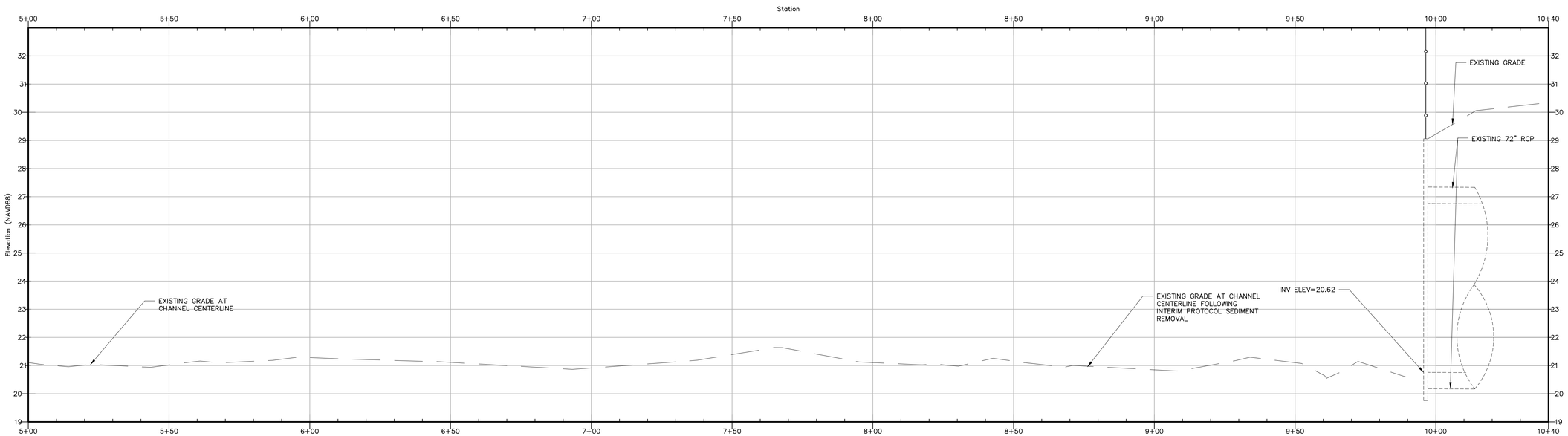

TOWN BROOK OPEN CHANNEL - PROFILE VIEW

1"=20' H STA 5+00 TO STA 10+70

1"=2' V

HORIZONTAL SCALE IN FEET

20 0 10 20 40 80

2 0 1 2 4 8

VERTICAL SCALE IN FEET

EBI Consulting
environmental | engineering | due diligence
21 B Street | Burlington, MA 01803
Tel: 781.273.2500 | Fax: 781.273.3311
www.ebiconsulting.com

COMMONWEALTH OF MASSACHUSETTS
KARLIS SKULTE
CIVIL
No. 47703
REGISTERED PROFESSIONAL ENGINEER
4/17/2013

PREPARED FOR:
City of Quincy

1305 Hancock Street
Quincy, MA 02169
Tel: (617) 376-1362
Fax: (617) 376-1097

THIS DOCUMENT IS THE DESIGN PROPERTY AND COPYRIGHT OF EBI CONSULTING, INC. AND FOR THE EXCLUSIVE USE BY THE TITLE CLIENT. ANY DUPLICATION OR USE WITHOUT EXPRESS WRITTEN CONSENT OF THE CREATOR IS STRICTLY PROHIBITED.

DRAWING SCALES NOTED ARE FOR 22" x 34" SIZE PRINTED MEDIA ONLY. ALL OTHER PRINTED SIZES ARE DEEMED "NOT TO SCALE".

SUBMITTALS

NO.	DATE	DESCRIPTION	BY

DATE: April 17, 2013

PROJECT NUMBER: 16120008

PROJECT TITLE:
Town Brook Base Flow Recapture Improvements

Centre Street
Quincy, Massachusetts 02169
Norfolk County

ISSUED FOR:
Permitting
(Not Approved for Construction)

SHEET TITLE:
Existing Plan & Profile 4
Town Brook Open Channel

SCALE: AS NOTED

DESIGNED BY: MVG | JVC

CHECKED BY: KPS | BKF

SHEET NO: C-6.4

EXISTING DRAINAGE AND SEWER TABLE

STRUCTURE NO.	RIM ELEV.	INV. OUT ELEV.	INV. IN ELEV.	FROM	PIPE SIZE	H20 ELEV.	BOTTOM ELEV.
CB-1	32.07	28.17			12" RCP		
DMH-1	31.99	27.49	26.89	CB-1			
DMH-2	32.99	24.95	29.69	DMH-1	12" RCP		
			25.49	N			
			24.95	SW	42" RCP TROUGH		
DMH-3	31.66	27.76	28.66	NW	12" RCP		
			27.76	N	12" RCP		
DMH-4	30.79	24.64	29.59	DMH-3	12" RCP		
			24.64	DMH2	42" RCP TROUGH		
CB-2	31.38				12" RCP		
CB-3	30.57	26.32			12" RCP		
CB-4	29.82	27.17			12" RCP		
CB-5	29.99	26.59	26.44	CB-4	12" RCP		
DMH-5	30.42	25.62	25.62	CB-5	12" RCP		
			25.82	CB-3	12" RCP		
DMH-6	30.99	25.66	N/A	DMH-5	12" RCP		
			25.66	DMH-4	42" RCP TROUGH		
SMH-1	31.64	24.14			8" PVC FLOW LINE		
SMH-2	30.16	25.98	ABANDONED		8" PVC FLOW LINE		
SMH-3	30.20	25.35	25.35	SMH-2	12"-18" RCP FLOW LINE		
SMH-4	30.22	21.57	25.02	SMH-3	18" RCP		
			21.67	SMH-1	8" PVC		
			21.57	SE	15" RCP FLOW LINE		
DMH-7	31.40	25.61	25.61	DMH-6	42" RCP TROUGH		
DMH-8	31.74	25.56	25.56	DMH-7	C.I. TROUGH		
BOX CULVERT		26.69			24" x 24" RCP		
DMH-9	31.20	25.54	25.54	SE	48" CMP		
		24.3			WATER LEVEL		
DMH-10	29.76	24.26			WATER LEVEL 72" RCP	25.46	22.95
			24.81	NW	15" RCP		
			25.2±	DMH-9	48" CMP		
			25.95	BOX CULVERT	24" x 24" BOX CULVERT		
DMH-11	29.82				SILTED IN		
CB-6	29.70	24.55	24.65	CB-13	12" RCP	24.20	25.50
CB-7 (DOUBLE)	30.12	28.32			12" RCP		
DMH-12	31.33	28.45	28.55	CB-7	12" CI	25.25	21.85
			28.55	NE	12" CI		
			28.58	FROM ABOVE	8" CI		
DMH-13	32.40	28.40	28.32	CB-6	12" CI	28.20	27.90
DMH-14	31.51	25.22	25.22	DMH-10	72" RCP	25.41	22.01
DMH-15	32.65	26.55	26.95	NW	24" RCP TROUGH	28.05	27.94
			27.88	CB-11	12" RCP		
DMH-16	32.52		29.12	CB-8	12" RCP	28.42	28.12 SILT
		29.02			10" CLAY		
DMH-17	33.38		28.18	CB-7	12" RCP	28.08	27.38
		28.13		DMH-18	12" RCP		
DMH-18	33.02		HOOD	DMH-2	12" RCP	27.72	26.92
		27.67		DMH-17	12" RCP		
CB-7	32.18	28.38		DMH-17	12" RCP		SILTED
			28.38	NW	12" RCP		
			30.48	SW	6" CLAY		
CB-8	32.17	29.52		DMH-16	12" RCP		27.17 SILT
CB-9	31.25	29.05		DMH-3	12" RCP		SILTED
CB-10	31.75			DMH-3			
CB-11	33.09	HOOD		DMH-15	12" RCP	29.59	27.49
			30.49	CB-12	8" CLAY		
CB-12	32.78	29.58		CB-11	8" CLAY	30.08	29.48
CB-13	30.63	27.78		CB-6	12" RCP	27.63	27.03
SMH-5	33.09	22.53	22.53	NW	10" RCP TROUGH		
SMH-6	32.25	22.85	22.85	SMH-7	10" RCP TROUGH		
			23.05	SW	8" PVC		
SMH-7	31.09	21.23	21.23	NE	18" RCP		
			21.40	SMH-8	12" RCP		
SMH-8	32.27	22.61	22.73	WEST	12" RCP		
CB-14	29.52	25.72	26.00	NW	15" RCP	25.62	24.62 SILT
DMH-19	33.22	25.57	25.57	NW	48" CMP TROUGH	24.72	23.57
			25.30	15" RCP			
DMH-20	33.23	25.75	25.75	DMH-19	48" CMP TROUGH		
			24.57	DMH-26	36" RCP		
DMH-21	32.54		24.04	DMH-20	48" CMP	24.59	24.01
DMH-22	32.52		23.93	DMH-20	48" CMP	24.57	23.93
			27.02	CB-23	CONCRETE FILLED PIPE		
DMH-23	32.43	26.38	27.93	DBL.-CB-26	12" HDPE		26.33
			26.54	NW	12"HDPE		
DMH-24	32.86	25.26	25.33	DMH-30	30" HDPE	24.06	16.66 SILT
DMH-25	32.93	23.93	23.93	DMH-24	30" HDPE	24.33	24.03
DMH-26	31.49	25.54	25.74	NE	12" RCP		24.94
			26.64	CB-19	12" RCP		
			26.79	NE	12" RCP		
			26.54	CB-18	12" RCP		
DMH-27	32.59	(A) 23.99				24.89	23.19
DMH-28	32.64	26.79	27.16	NE	12" RCP		27.14
			28.19	SE	12" RCP		
			30.14	CB-24			
			27.24	PIPE REPLACEMENT CB-24	12" RCP		
DMH-29	32.47	29.67	29.77	DMH-28	12" RCP	29.67	22.87

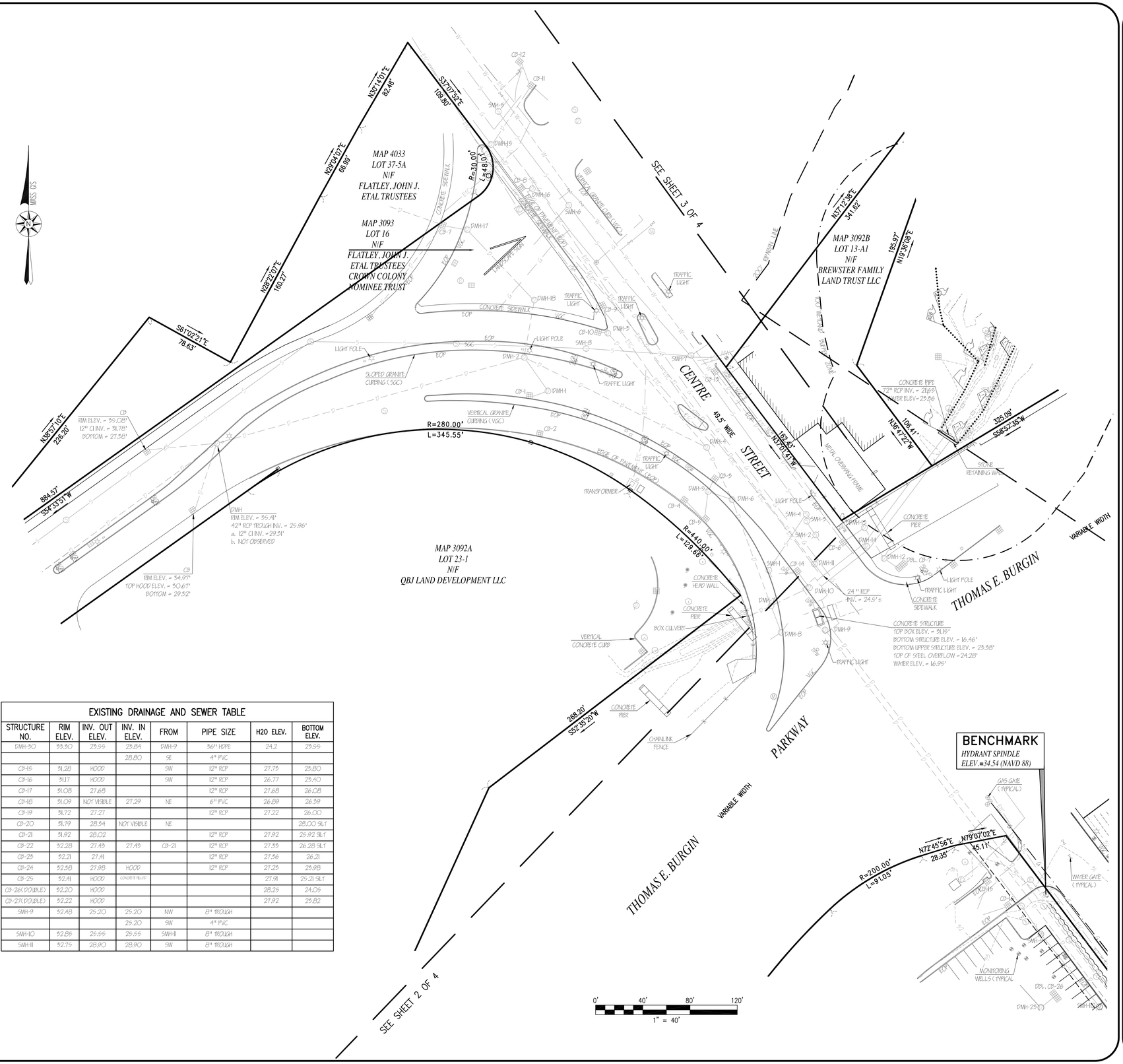

EXISTING DRAINAGE AND SEWER TABLE

STRUCTURE NO.	RIM ELEV.	INV. OUT ELEV.	INV. IN ELEV.	FROM	PIPE SIZE	H20 ELEV.	BOTTOM ELEV.
DMH-30	33.30	25.55	25.84	DMH-9	36" HDPE	24.2	23.55
			28.80	SE	4" PVC		
CB-15	31.28	HOOD		SW	12" RCP	27.75	25.80
CB-16	31.17	HOOD		SW	12" RCP	26.77	25.40
CB-17	31.08	27.68			12" RCP	27.68	26.08
CB-18	31.09	NOT VISIBLE	27.29	NE	6" PVC	26.89	26.59
CB-19	31.72	27.27			12" RCP	27.22	26.00
CB-20	31.79	28.54	NOT VISIBLE	NE			28.00 SILT
CB-21	31.92	28.02			12" RCP	27.92	25.92 SILT
CB-22	32.28	27.45	27.45	CB-21	12" RCP	27.55	26.28 SILT
CB-23	32.21	27.41			12" RCP	27.36	26.21
CB-24	32.38	27.98	HOOD		12" RCP	27.25	25.98
CB-25	32.41	HOOD	CONCRETE FILLED			27.91	25.21 SILT
CB-26K (DOUBLE)	32.20	HOOD				28.25	24.05
CB-27K (DOUBLE)	32.22	HOOD				27.92	25.82
SMH-9	32.48	25.20	25.20	NW	8" TROUGH		
			25.20	SW	4" PVC		
SMH-10	32.85	25.55	25.55	SMH-11	8" TROUGH		
SMH-11	32.75	28.90	28.90	SW	8" TROUGH		

REVISIONS

THOMPSONFARLAND
PROFESSIONAL ENGINEERS // LAND SURVEYORS
www.ThompsonFarland.com
(MAIN OFFICE) 398 COUNTY STREET, NEW BEDFORD, MA 02740 P.508.717.3479
NEW BEDFORD | TAUNTON | CAMBRIDGE | MARLBOROUGH

DRAWN BY: MOB/SMB

CHECKED BY: BJM

EXISTING CONDITIONS
TOWN BROOK ENHANCEMENT PROJECT
QUINCY, MASSACHUSETTS

PREPARED FOR: EBI CONSULTING
51 SLEEPER STREET, SUITE 600
BOSTON, MA 02210

JANUARY 14, 2013

SCALE: 1"=40'

JOB NO. 12-1189

LATEST REVISION:
APRIL 2, 2013

SHEET 1 OF 4

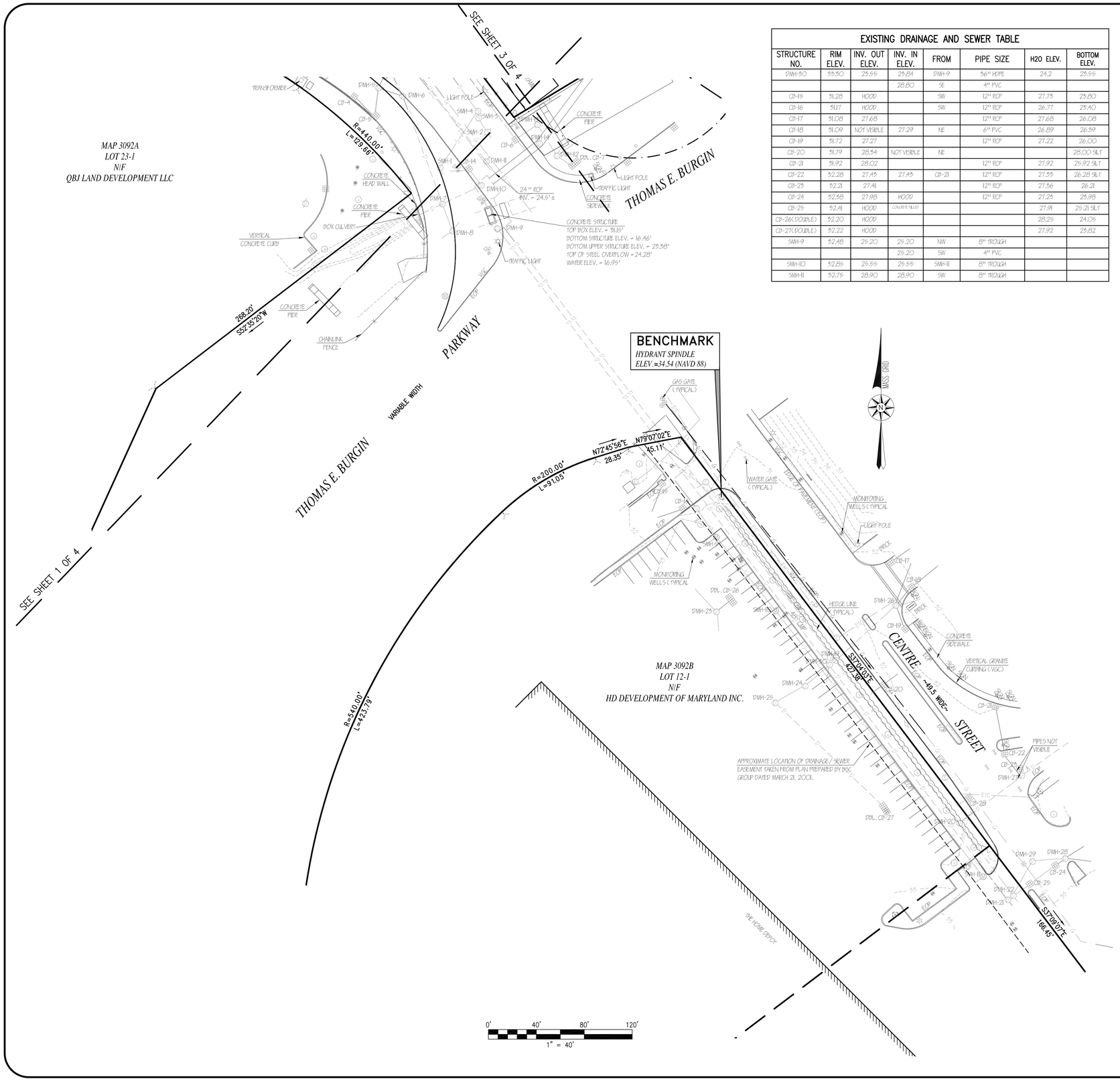

EXISTING DRAINAGE AND SEWER TABLE

STRUCTURE NO.	RIM ELEV.	INV. OUT ELEV.	INV. IN ELEV.	FROM	PIPE SIZE	H20 ELEV.	BOTTOM ELEV.
DMH-30	33.30	23.55	23.84	DMH-9	36" HDPE	24.2	23.55
			28.80	SE	4" PVC		
CB-15	31.28	HOOD		SW	12" RCP	27.75	25.80
CB-16	31.17	HOOD		SW	12" RCP	26.77	25.40
CB-17	31.08	27.68			12" RCP	27.68	26.08
CB-18	31.09	NOT VISIBLE	27.29	NE	6" PVC	26.89	26.59
CB-19	31.72	27.27			12" RCP	27.22	26.00
CB-20	31.79	28.34	NOT VISIBLE	NE			28.00 SILT
CB-21	31.92	28.02			12" RCP	27.92	25.92 SILT
CB-22	32.28	27.85	27.85	CB-21	12" RCP	27.55	26.28 SILT
CB-23	32.21	27.41			12" RCP	27.36	26.21
CB-24	32.38	27.98	HOOD		12" RCP	27.25	25.98
CB-25	32.41	HOOD	CONCRETE FILLED			27.19	25.21 SILT
CB-26 (DOUBLE)	32.20	HOOD				28.25	24.06
CB-27 (DOUBLE)	32.22	HOOD				27.92	25.82
SMH-9	32.48	29.20	29.20	NW	8" TROUGH		
			29.20	SW	4" PVC		
SMH-10	32.86	29.55	29.55	SMH-11	8" TROUGH		
SMH-11	32.75	28.90	28.90	SW	8" TROUGH		

EXISTING DRAINAGE AND SEWER TABLE

STRUCTURE NO.	RIM ELEV.	INV. OUT ELEV.	INV. IN ELEV.	FROM	PIPE SIZE	H20 ELEV.	BOTTOM ELEV.
CB-1	32.07	28.17			12" RCP		
DMH-1	31.99	27.49	26.89	CB-1			
DMH-2	32.59	24.95	25.69	DMH-1	12" RCP		
			25.49	N			
			24.95	SW	42" RCP TROUGH		
DMH-3	31.66	27.76	28.66	NW	12" RCP		
			27.76	N	12" RCP		
DMH-4	30.79	24.64	25.59	DMH-3	12" RCP		
			24.64	DMH2	42" RCP TROUGH		
CB-2	31.38						
CB-3	30.97	26.32			12" RCP		
CB-4	29.82	27.17			12" RCP		
CB-5	29.99	26.39	26.44	CB-4	12" RCP		
DMH-5	30.42	25.62	25.62	CB-5	12" RCP		
			25.82	CB-3	12" RCP		
DMH-6	30.99	25.66	N/ A	DMH-5	12" RCP		
			25.66	DMH-4	42" RCP TROUGH		
SMH-1	31.64	24.14			8" PVC FLOW LINE		
SMH-2	30.16	25.98	ABANDONED		8" PVC FLOW LINE		
SMH-3	30.20	25.35	25.35	SMH-2	12"-48" RCP FLOW LINE		
SMH-4	30.22	21.37	25.02	SMH-3	18" RCP		
			21.67	SMH-1	8" PVC		
			21.37	SE	16" RCP FLOWLINE		
DMH-7	31.40	25.61	25.61	DMH-6	42" RCP TROUGH		
DMH-8	31.74	25.56	25.56	DMH-7	C.I. TROUGH		
BOX CULVERT		26.69			24" x 24" RCP		
DMH-9	31.20	25.34	25.34	SE	48" CMP		
		24.3			WATER LEVEL		
DMH-10	29.76	24.26			WATER LEVEL 72" RCP	25.46	22.95
			24.81	NW	15" RCP		
			25.2±	DMH-9	48" CMP		
			25.95	BOX CULVERT	24" x 24" BOX CULVERT		
DMH-11	29.82				SILTED IN		
CB-6	29.70	24.35	24.65	CB-13	12" RCP	24.20	23.50
CB-7 (DOUBLE)	30.12	28.52			12" RCP		
DMH-12	31.33	28.45	28.33	CB-7	12" CI	23.23	21.83
			28.33	NE	12" CI		
			28.98	FROM ABOVE	8" CI		
DMH-13	32.40	28.40	28.32	CB-6	12" CI	28.20	27.90
DMH-14	31.51	25.22	25.22	DMH-10	72" RCP	25.41	22.01
DMH-15	32.63	26.93	26.93	NW	24" RCP TROUGH	28.05	27.94
			27.88	CB-11	12" RCP		
DMH-16	32.52		29.12	CB-8	12" RCP	28.42	28.12 SILT
		29.02			10" CLAY		
DMH-17	33.38		28.18	CB-7	12" RCP	28.08	27.38
		28.15		DMH-18	12" RCP		
DMH-18	33.02		HOOD	DMH-2	12" RCP	27.72	26.92
		27.67		DMH-17	12" RCP		
CB-7	32.18	28.38		DMH-17	12" RCP		SILTED
			28.38	NW	12" RCP		
			30.48	SW	6" CLAY		
CB-8	32.17	29.52		DMH-16	12" RCP		27.17 SILT
CB-9	31.29	29.05		DMH-3	12" RCP		SILTED
CB-10	31.75			DMH-3			
CB-11	33.09	HOOD		DMH-15	12" RCP	29.59	27.49
			30.49	CB-12	8" CLAY		
CB-12	32.78	29.58		CB-11	8" CLAY	30.08	29.48
CB-13	30.63	27.78		CB-6	12" RCP	27.63	27.03
SMH-5	33.09	22.93	22.93	NW	10" RCP TROUGH		
SMH-6	32.25	22.86	22.86	SMH-7	10" RCP TROUGH		
			25.06	SW	8" PVC		
SMH-7	31.08	21.29	21.29	NE	18" RCP		
			21.40	SMH-8	12" RCP		
SMH-8	32.27	22.61	22.73	WEST	12" RCP		
CB-14	29.52	25.72	26.00	NW	15" RCP	25.62	24.62 SILT
DMH-19	35.22	25.57	25.57	NW	48" CMP TROUGH	24.72	25.57
			25.30	15" RCP			
DMH-20	35.25	25.75	25.75	DMH-19	48" CMP TROUGH		
			24.37	DMH-26	36" RCP		
DMH-21	32.54		24.04	DMH-30	48" CMP	24.59	24.01
DMH-22	32.52		25.95	DMH-20	48" CMP	24.57	25.95
			27.02	CB-25	CONCRETE FILLED PIPE		
DMH-25	32.45	26.38	27.95	DBL-CB-26	12" HDPE		26.35
			26.54	NW	12" HDPE		
DMH-24	32.96	25.26	25.35	DMH-30	30" HDPE	24.06	16.66 SILT
DMH-29	32.95	25.95	25.95	DMH-24	30" HDPE	24.55	24.05
DMH-26	31.49	25.54	25.74	NE	12" RCP		24.94
			26.64	CB-19	12" RCP		
			26.79	NE	12" RCP		
			26.54	CB-18	12" RCP		
DMH-27	32.59	(A) 25.99				24.89	25.19
DMH-28	32.64	26.79	27.16	NE	12" RCP		27.14
			28.19	SE	12" RCP		
			30.14	CB-24			
			27.24	PIPE ROAS UNDER CB-24	12" RCP		
DMH-29	32.47	25.67	25.77	DMH-28	12" RCP	25.67	22.87

REVISIONS

THOMPSONFARLAND
PROFESSIONAL ENGINEERS // LAND SURVEYORS
www.ThompsonFarland.com
(MAIN OFFICE) 398 COUNTY STREET, NEW BEDFORD, MA 02740 P.508.717.3479
NEW BEDFORD | TAUNTON | CAMBRIDGE | MARLBOROUGH

DRAWN BY: MOB/SMB

CHECKED BY: BJM

EXISTING CONDITIONS

TOWN BROOK ENHANCEMENT PROJECT
QUINCY, MASSACHUSETTS

PREPARED FOR: EBI CONSULTING
51 SLEEPER STREET, SUITE 600
BOSTON, MA 02210

JANUARY 14, 2013

SCALE: 1"=40'

JOB NO. 12-1189

LATEST REVISION:
APRIL 2, 2013

SHEET 2 OF 4

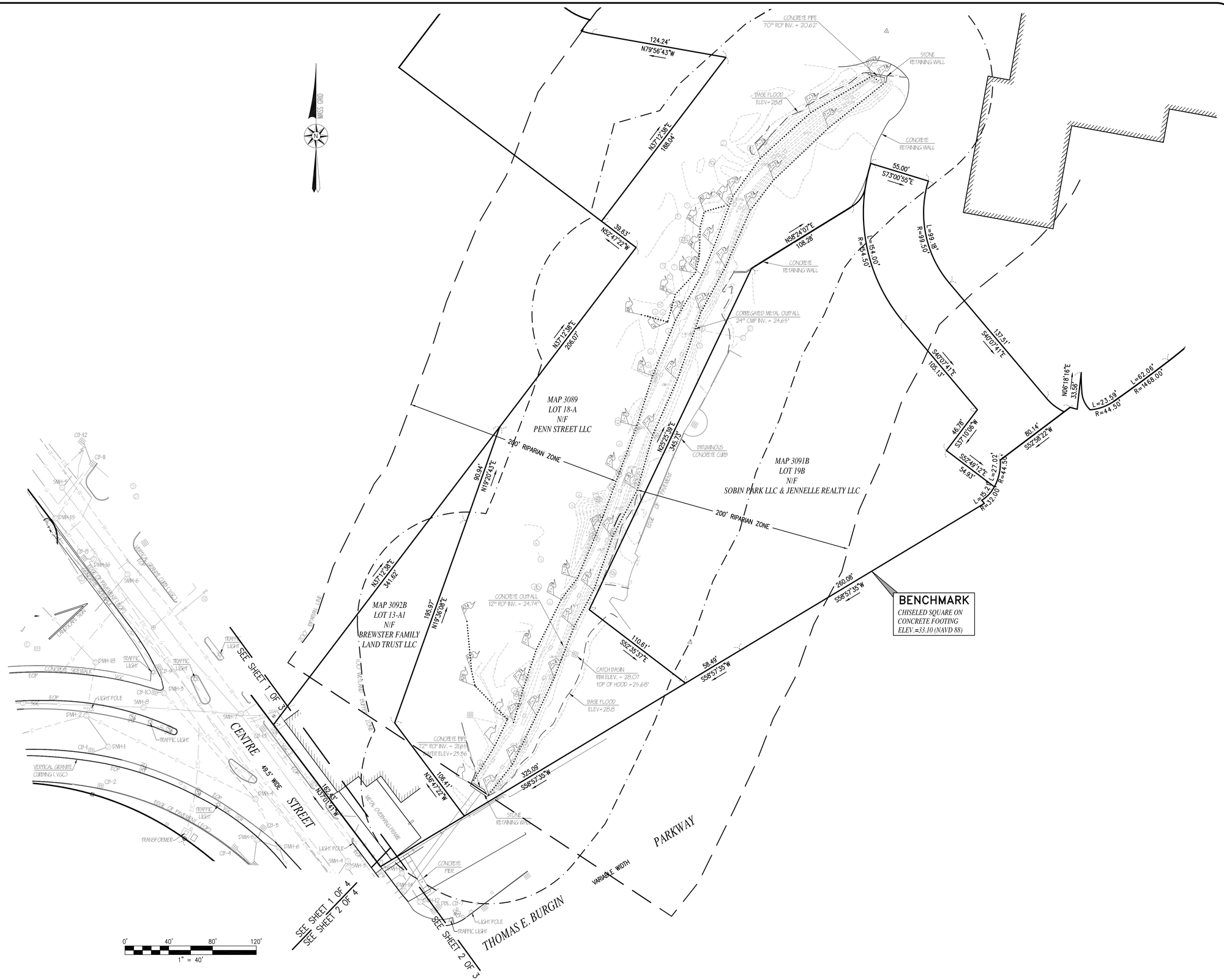

REVISIONS

THOMPSONFARLAND
PROFESSIONAL ENGINEERS // LAND SURVEYORS
www.ThompsonFarland.com
(MAIN OFFICE) 398 COUNTY STREET, NEW BEDFORD, MA 02740 P.508.717.3479
NEW BEDFORD | TAUNTON | CAMBRIDGE | MARLBOROUGH

DRAWN BY: MOB/SMB

CHECKED BY: BJM

EXISTING CONDITIONS

TOWN BROOK ENHANCEMENT PROJECT
QUINCY, MASSACHUSETTS

PREPARED FOR: EBI CONSULTING
51 SLEEPER STREET, SUITE 600
BOSTON, MA 02210

JANUARY 14, 2013

SCALE: 1"=40'

JOB NO. 12-1189

LATEST REVISION:
APRIL 2, 2013

SHEET 3 OF 4

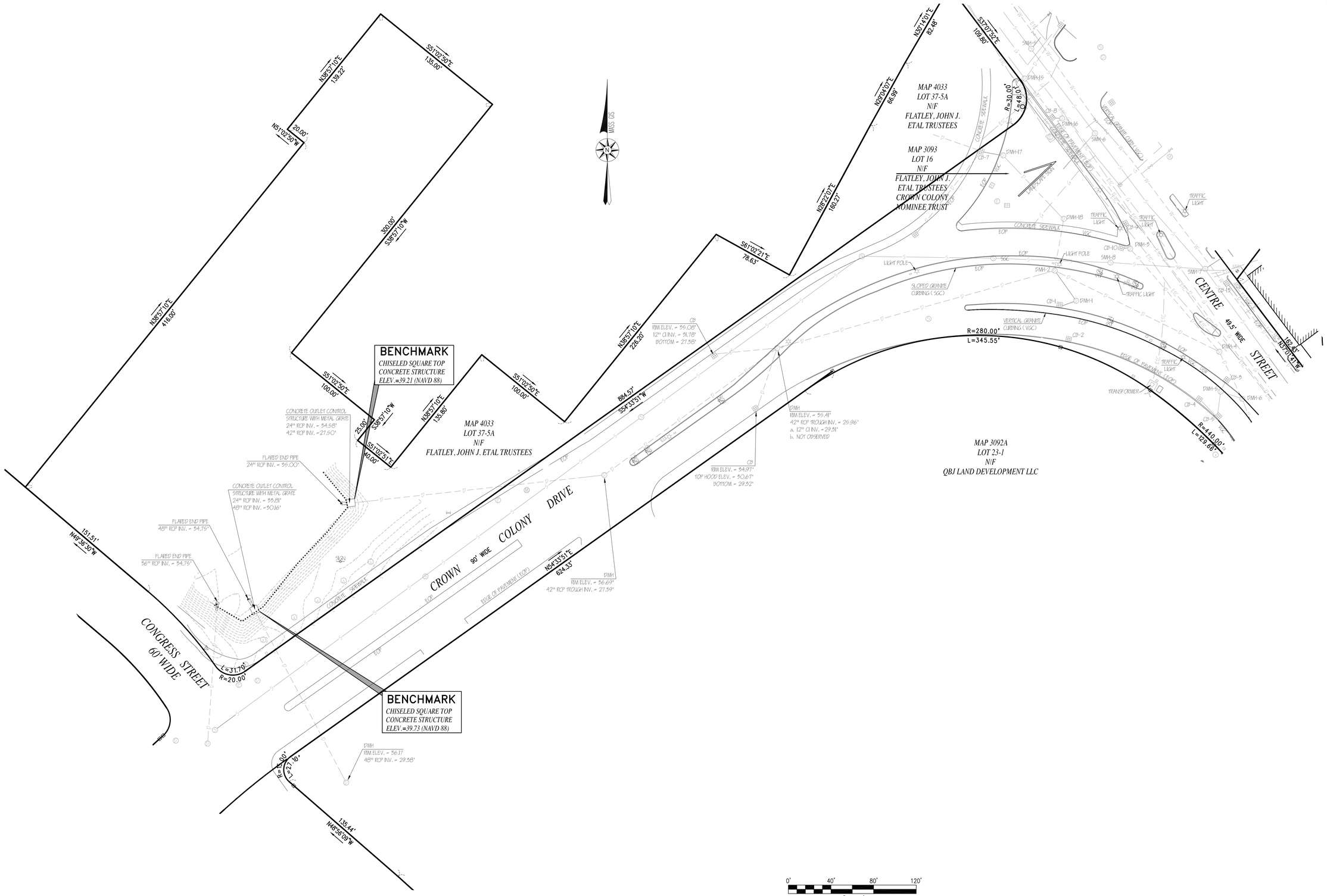

REVISIONS

THOMPSONFARLAND
PROFESSIONAL ENGINEERS // LAND SURVEYORS
www.ThompsonFarland.com
(MAIN OFFICE) 398 COUNTY STREET, NEW BEDFORD, MA 02740 P.508.717.3479
NEW BEDFORD | TAUNTON | CAMBRIDGE | MARLBOROUGH

DRAWN BY: MOB/SMB

CHECKED BY: BJM

EXISTING CONDITIONS

TOWN BROOK ENHANCEMENT PROJECT
QUINCY, MASSACHUSETTS

PREPARED FOR: EBI CONSULTING
51 SLEEPER STREET, SUITE 600
BOSTON, MA 02210

JANUARY 14, 2013

SCALE: 1"=40'

JOB NO. 12-1189

LATEST REVISION:
APRIL 2, 2013

SHEET 4 OF 4

APPENDIX C
TECHNICAL DOCUMENTATION

i – Existing Base Flow
ii – Existing Design Flow
iii – Proposed Base Flow
iv – Proposed Design Flow
v – Hydraulic Grade Line Design Flow Drainage Profiles
vi – Existing Trough Base Flow Calculation
vii – Crown Colony Stormwater Outlet Control Structures
viii – Water Quality Unit Technical Documentation

i – Existing Base Flow

Project Description

File Name	16120008 SSA EX BF.SPF

Project Options

Flow Units	CFS
Elevation Type	Elevation
Hydrology Method	SCS TR-20
Time of Concentration (TOC) Method	User-Defined
Link Routing Method	Hydrodynamic
Enable Overflow Ponding at Nodes	YES
Skip Steady State Analysis Time Periods	NO

Analysis Options

Start Analysis On	Dec 18, 2012	00:00:00
End Analysis On	Dec 19, 2012	00:00:00
Start Reporting On	Dec 18, 2012	00:00:00
Antecedent Dry Days	0	days
Runoff (Dry Weather) Time Step	0 01:00:00	days hh:mm:ss
Runoff (Wet Weather) Time Step	0 00:05:00	days hh:mm:ss
Reporting Time Step	0 00:05:00	days hh:mm:ss
Routing Time Step	1	seconds

Number of Elements

	Qty
Rain Gages	1
Subbasins	0
Nodes	35
Junctions	25
Outfalls	2
Flow Diversions	0
Inlets	8
Storage Nodes	0
Links	37
Channels	3
Pipes	31
Pumps	0
Orifices	0
Weirs	3
Outlets	0
Pollutants	0
Land Uses	0

Node Summary

SN	Element ID	Element Type	Invert Elevation (ft)	Ground/Rim (Max) Elevation (ft)	Peak Inflow (cfs)	Max HGL Elevation Attained (ft)	Min Freeboard Attained (ft)
1	DMH-A10	Junction	23.34	31.20	3.80	23.66	7.54
2	DMH-A11	Junction	23.57	33.22	4.37	24.59	8.63
3	DMH-A12	Junction	23.93	32.52	3.80	24.78	7.74
4	DMH-A2	Junction	22.01	31.51	17.00	23.59	7.92
5	DMH-A2B	Junction	22.20	31.08	12.07	23.60	7.48
6	DMH-A4	Junction	22.70	30.00	8.97	23.63	6.37
7	DMH-A5	Junction	26.53	32.60	0.00	26.53	6.07
8	DMH-A6	Junction	22.93	29.76	7.75	23.62	6.14
9	DMH-A8	Junction	23.17	31.19	6.19	23.63	7.56
10	DMH-A9	Junction	23.28	31.16	3.80	23.65	7.51
11	DMH-B11	Junction	24.64	30.79	3.55	25.02	5.77
12	DMH-B12	Junction	27.76	31.66	0.00	27.76	3.90
13	DMH-B13	Junction	24.95	32.59	3.61	25.64	6.95
14	DMH-B14	Junction	26.89	31.99	0.00	26.89	5.10
15	DMH-B16	Junction	27.67	33.02	0.00	27.67	5.35
16	DMH-B17	Junction	28.13	33.38	0.00	28.13	5.25
17	DMH-B18	Junction	25.96	35.41	3.71	26.56	8.85
18	DMH-B2	Junction	17.32	31.00	3.54	17.52	13.48
19	DMH-B21	Junction	27.39	36.69	4.24	27.93	8.76
20	DMH-B3	Junction	17.56	31.74	3.53	17.73	14.01
21	DMH-B4	Junction	23.61	31.40	3.54	24.31	7.09
22	DMH-B6	Junction	23.66	30.99	3.55	24.53	6.46
23	DMH-B7	Junction	25.62	30.42	0.00	25.62	4.80
24	FES-B22 (Crown Colony Meadow)	Junction	27.50	39.34	3.50	28.47	10.87
25	HW-B5	Junction	26.69	28.69	0.00	26.69	2.00
26	HW-A1 (Town Brook)	Outfall	21.44		17.00	23.46	
27	HW-B1 (Burgin Parkway)	Outfall	17.28		3.53	17.44	

Link Summary

SN	Element ID	Element Type	From (Inlet) Node	To (Outlet) Node	Length	Inlet Invert Elevation	Outlet Invert Elevation	Average Slope	Diameter or Height	Manning's Roughness	Peak Flow	Design Flow Capacity	Peak Flow Velocity
					(ft)	(ft)	(ft)	(%)	(in)		(cfs)	(cfs)	(ft/sec)
1	Link-01	Pipe	FES-B22 (Crown Colony Meadow)	DMH-B21	235.5	27.50	27.39	0.05	42	0.013	4.24	21.75	3.18
2	Link-02	Pipe	DMH-B21	DMH-B18	201.5	27.39	25.96	0.71	42	0.013	3.71	84.76	4.67
3	Link-03	Pipe	DMH-B18	DMH-B13	270.5	25.96	24.95	0.37	42	0.013	3.61	61.48	3.66
4	Link-04	Pipe	DMH-B13	DMH-B11	172.1	24.95	24.64	0.18	42	0.013	3.55	42.70	3.79
5	Link-05	Pipe	DMH-B11	DMH-B6	48.9	24.64	23.66	2.00	42	0.013	3.55	142.44	3.69
6	Link-06	Pipe	DMH-B6	DMH-B4	96.0	23.66	23.61	0.05	42	0.013	3.54	22.96	2.40
7	Link-07	Pipe	DMH-B4	DMH-B3	13.0	23.61	23.56	0.38	42	0.013	3.53	62.40	2.99
8	Link-09	Pipe	DMH-B2	HW-B1 (Burgin Parkway)	13.3	17.32	17.28	0.30	90	0.013	3.53	986.72	1.64
9	Link-10A	Pipe	DMH-A2	HW-A1 (Town Brook)	116.1	22.01	21.44	0.49	72	0.013	17.00	296.74	3.05
10	Link-10B	Pipe	DMH-A2B	DMH-A2	12.5	22.20	22.01	1.52	48	0.013	12.07	449.56	2.16
11	Link-10C	Pipe	CB-A3	DMH-A2B	14.5	24.00	23.90	0.69	15	0.015	0.00	4.64	0.00
12	Link-11A	Pipe	DMH-A4	DMH-A2B	31.6	22.70	22.23	1.49	48	0.013	8.97	444.95	1.68
13	Link-11B	Pipe	DMH-A5	DMH-A4	463.1	26.53	24.50	0.44	24	0.013	0.00	14.98	0.00
14	Link-12	Pipe	DMH-A6	DMH-A4	15.5	22.93	22.70	1.48	48	0.013	7.75	444.50	2.18
15	Link-12A	Pipe	CB-A7	DMH-A6	17.6	25.70	24.81	5.07	15	0.013	0.00	14.55	0.00
16	Link-12B	Pipe	DMH-B4	DMH-A6	24.0	26.30	25.95	1.46	24	0.013	0.00	34.78	0.00
17	Link-13	Pipe	DMH-A8	DMH-A6	21.8	23.17	22.93	1.10	78	0.013	6.19	1857.09	1.25
18	Link-16	Pipe	DMH-A11	DMH-A10	457.7	23.57	23.34	0.05	48	0.025	3.80	33.49	1.37
19	Link-17	Pipe	DMH-A12	DMH-A11	246.1	23.93	23.57	0.15	48	0.025	4.37	57.14	1.64
20	Link-2A	Pipe	CB-B19	DMH-B18	58.8	31.78	29.31	4.20	12	0.013	0.00	7.30	0.00
21	Link-2B	Pipe	CB-B20	DMH-B18	60.3	30.67	29.31	2.25	12	0.013	0.00	5.35	0.00
22	Link-3A	Pipe	DMH-B14	DMH-B13	34.6	27.49	25.69	5.20	12	0.013	0.00	8.12	0.00
23	Link-3B	Pipe	CB-B15	DMH-B14	16.3	28.17	26.89	7.85	12	0.013	0.00	9.98	0.00
24	Link-3C	Pipe	DMH-B16	DMH-B13	48.9	27.67	25.49	4.46	12	0.013	0.00	7.53	0.00
25	Link-3D	Pipe	DMH-B17	DMH-B16	79.3	28.13	27.67	0.58	12	0.013	0.00	2.71	0.00
26	Link-4A	Pipe	DMH-B12	DMH-B11	128.2	27.76	25.59	1.69	12	0.013	0.00	4.64	0.00
27	Link-5A	Pipe	DMH-B7	DMH-B6	21.6	25.62	25.19	1.99	12	0.013	0.00	5.03	0.00
28	Link-5B	Pipe	CB-B8	DMH-B7	12.7	26.32	25.82	3.92	12	0.013	0.00	7.06	0.00
29	Link-5C	Pipe	CB-B9	DMH-B7	23.4	26.39	25.62	3.29	12	0.013	0.00	6.47	0.00
30	Link-5D	Pipe	CB-B10	CB-B9	24.2	27.17	26.44	3.01	12	0.013	0.00	6.18	0.00
31	Link-6A	Pipe	HW-B5	DMH-B4	17.0	26.69	26.30	2.29	24	0.013	0.00	43.63	0.00
32	Link-08	Channel	DMH-B3	DMH-B2	80.7	17.56	17.32	0.30	84	0.013	3.54	1144.43	1.69
33	Link-14	Channel	DMH-A9	DMH-A8	15.3	23.28	23.17	0.72	12	0.015	3.80	27.58	2.65
34	Link-15	Channel	DMH-A10	DMH-A9	6.0	23.34	23.28	1.00	72	0.013	3.80	2004.08	1.32
35	Trough entrance	Weir	DMH-A9	DMH-B2		23.28	17.32				0.00		
36	Trough rear wall	Weir	DMH-A8	DMH-B2		23.17	17.32				0.00		
37	Trough side walls	Weir	DMH-A9	DMH-B2		23.28	17.32				0.00		

Junction Input

SN	Element ID	Invert Elevation (ft)	Ground/Rim (Max) Elevation (ft)	Ground/Rim (Max) Offset (ft)
1	DMH-A10	23.34	31.20	7.86
2	DMH-A11	23.57	33.22	9.65
3	DMH-A12	23.93	32.52	8.59
4	DMH-A2	22.01	31.51	9.50
5	DMH-A2B	22.20	31.08	8.88
6	DMH-A4	22.70	30.00	7.30
7	DMH-A5	26.53	32.60	6.07
8	DMH-A6	22.93	29.76	6.83
9	DMH-A8	23.17	31.19	8.02
10	DMH-A9	23.28	31.16	7.88
11	DMH-B11	24.64	30.79	6.15
12	DMH-B12	27.76	31.66	3.90
13	DMH-B13	24.95	32.59	7.64
14	DMH-B14	26.89	31.99	5.10
15	DMH-B16	27.67	33.02	5.35
16	DMH-B17	28.13	33.38	5.25
17	DMH-B18	25.96	35.41	9.45
18	DMH-B2	17.32	31.00	13.68
19	DMH-B21	27.39	36.69	9.30
20	DMH-B3	17.56	31.74	14.18
21	DMH-B4	23.61	31.40	7.79
22	DMH-B6	23.66	30.99	7.33
23	DMH-B7	25.62	30.42	4.80
24	FES-B22 (Crown Colony Meadow)	27.50	39.34	11.84
25	HW-B5	26.69	28.69	2.00

Junction Results

SN	Element ID	Peak Inflow (cfs)	Peak Lateral Inflow (cfs)	Max HGL Elevation Attained (ft)	Min Freeboard Attained (ft)
1	DMH-A10	3.80	0.00	23.66	7.54
2	DMH-A11	4.37	0.00	24.59	8.63
3	DMH-A12	3.80	3.80	24.78	7.74
4	DMH-A2	17.00	0.00	23.59	7.92
5	DMH-A2B	12.07	0.00	23.60	7.48
6	DMH-A4	8.97	0.00	23.63	6.37
7	DMH-A5	0.00	0.00	26.53	6.07
8	DMH-A6	7.75	0.00	23.62	6.14
9	DMH-A8	6.19	0.00	23.63	7.56
10	DMH-A9	3.80	0.00	23.65	7.51
11	DMH-B11	3.55	0.00	25.02	5.77
12	DMH-B12	0.00	0.00	27.76	3.90
13	DMH-B13	3.61	0.00	25.64	6.95
14	DMH-B14	0.00	0.00	26.89	5.10
15	DMH-B16	0.00	0.00	27.67	5.35
16	DMH-B17	0.00	0.00	28.13	5.25
17	DMH-B18	3.71	0.00	26.56	8.85
18	DMH-B2	3.54	0.00	17.52	13.48
19	DMH-B21	4.24	0.00	27.93	8.76
20	DMH-B3	3.53	0.00	17.73	14.01
21	DMH-B4	3.54	0.00	24.31	7.09
22	DMH-B6	3.55	0.00	24.53	6.46
23	DMH-B7	0.00	0.00	25.62	4.80
24	FES-B22 (Crown Colony Meadow)	3.50	3.50	28.47	10.87
25	HW-B5	0.00	0.00	26.69	2.00

Channel Input

SN	Element ID	Length (ft)	Inlet Invert Elevation (ft)	Inlet Invert Offset (ft)	Outlet Invert Elevation (ft)	Outlet Invert Offset (ft)	Total Drop (ft)	Average Slope (%)	Shape	Height (ft)	Width (ft)	Manning's Roughness	Entrance Losses	Exit/Bend Losses	Additional Losses
1	Link-08	80.69	17.56	0.00	17.32	0.00	0.24	0.3000	Rectangular	7.000	12.000	0.0130	0.5000	0.5000	0.0000
2	Link-14	15.33	23.28	0.00	23.17	0.00	0.11	0.7200	Rectangular	1.000	4.250	0.0150	0.5000	0.5000	0.0000
3	Link-15	5.98	23.34	0.00	23.28	0.00	0.06	1.0000	Rectangular	6.000	13.500	0.0130	0.5000	0.5000	0.0000

Channel Results

SN	Element ID	Peak Flow	Time of Peak Flow Occurrence	Design Flow Capacity	Peak Flow Velocity	Travel Time	Peak Flow Depth
		(cfs)	(days hh:mm)	(cfs)	(ft/sec)	(min)	(ft)
1	Link-08	3.54	0 00:09	1144.43	1.69	0.80	0.18
2	Link-14	3.80	0 04:46	27.58	2.65	0.10	0.34
3	Link-15	3.80	0 07:41	2004.08	1.32	0.08	0.34

Pipe Input

SN	Element ID	Length (ft)	Inlet Invert Elevation (ft)	Outlet Invert Elevation (ft)	Total Drop (ft)	Average Slope (%)	Pipe Shape	Pipe Diameter or Height (in)	Manning's Roughness	Entrance Losses	Exit/Bend Losses
1	Link-01	235.45	27.50	27.39	0.11	0.05	CIRCULAR	42	0.013	0.5	0.6
2	Link-02	201.49	27.39	25.96	1.43	0.71	CIRCULAR	42	0.013	0.5	0.6
3	Link-03	270.47	25.96	24.95	1.01	0.37	CIRCULAR	42	0.013	0.5	0.7
4	Link-04	172.12	24.95	24.64	0.31	0.18	CIRCULAR	42	0.013	0.5	0.6
5	Link-05	48.89	24.64	23.66	0.98	2.00	CIRCULAR	42	0.013	0.5	0.5
6	Link-06	96.01	23.66	23.61	0.05	0.05	CIRCULAR	42	0.013	0.5	0.5
7	Link-07	13.00	23.61	23.56	0.05	0.38	CIRCULAR	42	0.013	0.5	0.5
8	Link-09	13.26	17.32	17.28	0.04	0.30	Rectangular	90	0.013	0.5	0.5
9	Link-10A	116.10	22.01	21.44	0.57	0.49	CIRCULAR	72	0.013	0.5	0.6
10	Link-10B	12.51	22.20	22.01	0.19	1.52	Rectangular	48	0.013	0.5	0.5
11	Link-10C	14.53	24.00	23.90	0.10	0.69	CIRCULAR	15	0.015	0.5	0.5
12	Link-11A	31.59	22.70	22.23	0.47	1.49	Rectangular	48	0.013	0.5	0.5
13	Link-11B	463.07	26.53	24.50	2.03	0.44	CIRCULAR	24	0.013	0.5	0.5
14	Link-12	15.49	22.93	22.70	0.23	1.48	Rectangular	48	0.013	0.5	0.5
15	Link-12A	17.55	25.70	24.81	0.89	5.07	CIRCULAR	15	0.013	0.5	0.8
16	Link-12B	24.00	26.30	25.95	0.35	1.46	Rectangular	24	0.013	0.5	0.5
17	Link-13	21.80	23.17	22.93	0.24	1.10	Rectangular	78	0.013	0.5	0.8
18	Link-16	457.66	23.57	23.34	0.23	0.05	CIRCULAR	48	0.025	0.5	0.5
19	Link-17	246.06	23.93	23.57	0.36	0.15	CIRCULAR	48	0.025	0.5	0.5
20	Link-2A	58.83	31.78	29.31	2.47	4.20	CIRCULAR	12	0.013	0.5	0.5
21	Link-2B	60.34	30.67	29.31	1.36	2.25	CIRCULAR	12	0.013	0.5	0.6
22	Link-3A	34.64	27.49	25.69	1.80	5.20	CIRCULAR	12	0.013	0.5	1.0
23	Link-3B	16.31	28.17	26.89	1.28	7.85	CIRCULAR	12	0.013	0.5	0.8
24	Link-3C	48.85	27.67	25.49	2.18	4.46	CIRCULAR	12	0.013	0.5	0.8
25	Link-3D	79.26	28.13	27.67	0.46	0.58	CIRCULAR	12	0.013	0.5	0.8
26	Link-4A	128.18	27.76	25.59	2.17	1.69	CIRCULAR	12	0.013	0.5	0.5
27	Link-5A	21.58	25.62	25.19	0.43	1.99	CIRCULAR	12	0.013	0.5	0.6
28	Link-5B	12.74	26.32	25.82	0.50	3.92	CIRCULAR	12	0.013	0.5	0.8
29	Link-5C	23.38	26.39	25.62	0.77	3.29	CIRCULAR	12	0.013	0.5	0.8
30	Link-5D	24.23	27.17	26.44	0.73	3.01	CIRCULAR	12	0.013	0.5	0.8
31	Link-6A	17.00	26.69	26.30	0.39	2.29	Rectangular	24	0.013	0.5	0.8

Pipe Results

SN	Element ID	Peak Flow (cfs)	Time of Peak Flow Occurrence (days hh:mm)	Design Flow Capacity (cfs)	Peak Flow Velocity (ft/sec)	Travel Time (min)
1	Link-01	4.24	0 00:02	21.75	3.18	1.23
2	Link-02	3.71	0 00:03	84.76	4.67	0.72
3	Link-03	3.61	0 00:06	61.48	3.66	1.23
4	Link-04	3.55	0 00:08	42.70	3.79	0.76
5	Link-05	3.55	0 00:08	142.44	3.69	0.22
6	Link-06	3.54	0 00:09	22.96	2.40	0.67
7	Link-07	3.53	0 00:09	62.40	2.99	0.07
8	Link-09	3.53	0 00:10	986.72	1.64	0.13
9	Link-10A	17.00	0 00:00	296.74	3.05	0.63
10	Link-10B	12.07	0 00:00	449.56	2.16	0.10
11	Link-10C	0.00	0 00:00	4.64	0.00	
12	Link-11A	8.97	0 00:00	444.95	1.68	0.31
13	Link-11B	0.00	0 00:00	14.98	0.00	
14	Link-12	7.75	0 00:01	444.50	2.18	0.12
15	Link-12A	0.00	0 00:00	14.55	0.00	
16	Link-12B	0.00	0 00:00	34.78	0.00	
17	Link-13	6.19	0 00:01	1857.09	1.25	0.29
18	Link-16	3.80	0 20:00	33.49	1.37	5.57
19	Link-17	4.37	0 00:05	57.14	1.64	2.50
20	Link-2A	0.00	0 00:00	7.30	0.00	
21	Link-2B	0.00	0 00:00	5.35	0.00	
22	Link-3A	0.00	0 00:00	8.12	0.00	
23	Link-3B	0.00	0 00:00	9.98	0.00	
24	Link-3C	0.00	0 00:00	7.53	0.00	
25	Link-3D	0.00	0 00:00	2.71	0.00	
26	Link-4A	0.00	0 00:00	4.64	0.00	
27	Link-5A	0.00	0 00:00	5.03	0.00	
28	Link-5B	0.00	0 00:00	7.06	0.00	
29	Link-5C	0.00	0 00:00	6.47	0.00	
30	Link-5D	0.00	0 00:00	6.18	0.00	
31	Link-6A	0.00	0 00:00	43.63	0.00	

ii – Existing Design Flow

Project Description

File Name	16120008 SSA EX.SPF

Project Options

Flow Units	CFS
Elevation Type	Elevation
Hydrology Method	SCS TR-20
Time of Concentration (TOC) Method	User-Defined
Link Routing Method	Hydrodynamic
Enable Overflow Ponding at Nodes	YES
Skip Steady State Analysis Time Periods	NO

Analysis Options

Start Analysis On	Dec 18, 2012	00:00:00
End Analysis On	Dec 19, 2012	00:00:00
Start Reporting On	Dec 18, 2012	00:00:00
Antecedent Dry Days	0	days
Runoff (Dry Weather) Time Step	0 01:00:00	days hh:mm:ss
Runoff (Wet Weather) Time Step	0 00:05:00	days hh:mm:ss
Reporting Time Step	0 00:05:00	days hh:mm:ss
Routing Time Step	1	seconds

Number of Elements

	Qty
Rain Gages	1
Subbasins	3
Nodes	35
Junctions	25
Outfalls	2
Flow Diversions	0
Inlets	8
Storage Nodes	0
Links	37
Channels	3
Pipes	31
Pumps	0
Orifices	0
Weirs	3
Outlets	0
Pollutants	0
Land Uses	0

Subbasin Summary

SN	Subbasin ID	Area (ac)	Weighted Curve Number	Total Rainfall (in)	Total Runoff (in)	Total Runoff Volume (ft^3)	Peak Runoff (cfs)	Time of Concentration (days hh:mm:ss)
1	Sub-01	3.92	92.00	4.7	3.80	54049.97	14.41	0 00:05:00
2	Sub-02	0.25	98.00	4.7	4.46	4098.21	1.01	0 00:05:00
3	Sub-03	0.46	98.00	4.7	4.46	7371.31	1.79	0 00:05:00

Node Summary

SN	Element ID	Element Type	Invert Elevation (ft)	Ground/Rim (Max) Elevation (ft)	Peak Inflow (cfs)	Max HGL Elevation Attained (ft)	Min Freeboard Attained (ft)
1	DMH-A10	Junction	23.34	31.20	3.96	23.76	7.44
2	DMH-A11	Junction	23.57	33.22	4.37	24.59	8.63
3	DMH-A12	Junction	23.93	32.52	3.80	24.78	7.74
4	DMH-A2	Junction	22.01	31.51	20.58	23.59	7.92
5	DMH-A2B	Junction	22.20	31.08	20.57	23.64	7.44
6	DMH-A4	Junction	22.70	30.00	18.84	23.68	6.32
7	DMH-A5	Junction	26.53	32.60	14.34	28.27	4.33
8	DMH-A6	Junction	22.93	29.76	7.76	23.69	6.07
9	DMH-A8	Junction	23.17	31.19	6.20	23.69	7.50
10	DMH-A9	Junction	23.28	31.16	4.07	23.75	7.41
11	DMH-B11	Junction	24.64	30.79	35.00	26.83	3.96
12	DMH-B12	Junction	27.76	31.66	0.00	27.76	3.90
13	DMH-B13	Junction	24.95	32.59	35.71	27.67	4.92
14	DMH-B14	Junction	26.89	31.99	0.18	27.68	4.31
15	DMH-B16	Junction	27.67	33.02	0.00	27.67	5.35
16	DMH-B17	Junction	28.13	33.38	0.00	28.13	5.25
17	DMH-B18	Junction	25.96	35.41	39.74	28.40	7.01
18	DMH-B2	Junction	17.32	31.00	35.00	18.23	12.77
19	DMH-B21	Junction	27.39	36.69	43.81	29.49	7.20
20	DMH-B3	Junction	17.56	31.74	35.00	18.48	13.26
21	DMH-B4	Junction	23.61	31.40	35.00	26.06	5.34
22	DMH-B6	Junction	23.66	30.99	35.00	26.61	4.38
23	DMH-B7	Junction	25.62	30.42	0.83	26.61	3.81
24	FES-B22 (Crown Colony Meadow)	Junction	27.50	39.34	35.00	30.99	8.35
25	HW-B5	Junction	26.69	28.69	0.00	26.69	2.00
26	HW-A1 (Town Brook)	Outfall	21.44		20.60	23.46	
27	HW-B1 (Burgin Parkway)	Outfall	17.28		35.00	17.94	

Link Summary

SN	Element ID	Element Type	From (Inlet) Node	To (Outlet) Node	Length	Inlet Invert Elevation	Outlet Invert Elevation	Average Slope	Diameter or Height	Manning's Roughness	Peak Flow	Design Flow Capacity	Peak Flow Velocity
					(ft)	(ft)	(ft)	(%)	(in)		(cfs)	(cfs)	(ft/sec)
1	Link-01	Pipe	FES-B22 (Crown Colony Meadow)	DMH-B21	235.5	27.50	27.39	0.05	42	0.013	43.81	21.75	6.18
2	Link-02	Pipe	DMH-B21	DMH-B18	201.5	27.39	25.96	0.71	42	0.013	39.74	84.76	7.92
3	Link-03	Pipe	DMH-B18	DMH-B13	270.5	25.96	24.95	0.37	42	0.013	35.71	61.48	6.64
4	Link-04	Pipe	DMH-B13	DMH-B11	172.1	24.95	24.64	0.18	42	0.013	35.00	42.70	5.75
5	Link-05	Pipe	DMH-B11	DMH-B6	48.9	24.64	23.66	2.00	42	0.013	35.00	142.44	5.87
6	Link-06	Pipe	DMH-B6	DMH-B4	96.0	23.66	23.61	0.05	42	0.013	35.00	22.96	4.79
7	Link-07	Pipe	DMH-B4	DMH-B3	13.0	23.61	23.56	0.38	42	0.013	35.00	62.40	5.67
8	Link-09	Pipe	DMH-B2	HW-B1 (Burgin Parkway)	13.3	17.32	17.28	0.30	90	0.013	35.00	986.72	3.72
9	Link-10A	Pipe	DMH-A2	HW-A1 (Town Brook)	116.1	22.01	21.44	0.49	72	0.013	20.60	296.74	3.05
10	Link-10B	Pipe	DMH-A2B	DMH-A2	12.5	22.20	22.01	1.52	48	0.013	20.58	449.56	2.16
11	Link-10C	Pipe	CB-A3	DMH-A2B	14.5	24.00	23.90	0.69	15	0.015	1.79	4.64	3.09
12	Link-11A	Pipe	DMH-A4	DMH-A2B	31.6	22.70	22.23	1.49	48	0.013	18.86	444.95	2.31
13	Link-11B	Pipe	DMH-A5	DMH-A4	463.1	26.53	24.50	0.44	24	0.013	13.98	14.98	5.38
14	Link-12	Pipe	DMH-A6	DMH-A4	15.5	22.93	22.70	1.48	48	0.013	7.76	444.50	2.18
15	Link-12A	Pipe	CB-A7	DMH-A6	17.6	25.70	24.81	5.07	15	0.013	1.01	14.55	5.61
16	Link-12B	Pipe	DMH-B4	DMH-A6	24.0	26.30	25.95	1.46	24	0.013	0.00	34.78	0.00
17	Link-13	Pipe	DMH-A8	DMH-A6	21.8	23.17	22.93	1.10	78	0.013	6.20	1857.09	1.25
18	Link-16	Pipe	DMH-A11	DMH-A10	457.7	23.57	23.34	0.05	48	0.025	3.96	33.49	1.37
19	Link-17	Pipe	DMH-A12	DMH-A11	246.1	23.93	23.57	0.15	48	0.025	4.37	57.14	1.64
20	Link-2A	Pipe	CB-B19	DMH-B18	58.8	31.78	29.31	4.20	12	0.013	0.00	7.30	0.00
21	Link-2B	Pipe	CB-B20	DMH-B18	60.3	30.67	29.31	2.25	12	0.013	0.00	5.35	0.00
22	Link-3A	Pipe	DMH-B14	DMH-B13	34.6	27.49	25.69	5.20	12	0.013	0.18	8.12	0.41
23	Link-3B	Pipe	CB-B15	DMH-B14	16.3	28.17	26.89	7.85	12	0.013	0.00	9.98	0.00
24	Link-3C	Pipe	DMH-B16	DMH-B13	48.9	27.67	25.49	4.46	12	0.013	0.00	7.53	0.01
25	Link-3D	Pipe	DMH-B17	DMH-B16	79.3	28.13	27.67	0.58	12	0.013	0.00	2.71	0.00
26	Link-4A	Pipe	DMH-B12	DMH-B11	128.2	27.76	25.59	1.69	12	0.013	0.00	4.64	0.00
27	Link-5A	Pipe	DMH-B7	DMH-B6	21.6	25.62	25.19	1.99	12	0.013	0.83	5.03	1.49
28	Link-5B	Pipe	CB-B8	DMH-B7	12.7	26.32	25.82	3.92	12	0.013	0.09	7.06	0.42
29	Link-5C	Pipe	CB-B9	DMH-B7	23.4	26.39	25.62	3.29	12	0.013	0.08	6.47	0.24
30	Link-5D	Pipe	CB-B10	CB-B9	24.2	27.17	26.44	3.01	12	0.013	0.00	6.18	0.00
31	Link-6A	Pipe	HW-B5	DMH-B4	17.0	26.69	26.30	2.29	24	0.013	0.00	43.63	0.00
32	Link-08	Channel	DMH-B3	DMH-B2	80.7	17.56	17.32	0.30	84	0.013	35.00	1144.43	3.62
33	Link-14	Channel	DMH-A9	DMH-A8	15.3	23.28	23.17	0.72	12	0.015	4.09	27.58	2.65
34	Link-15	Channel	DMH-A10	DMH-A9	6.0	23.34	23.28	1.00	72	0.013	4.07	2004.08	1.32
35	Trough entrance	Weir	DMH-A9	DMH-B2		23.28	17.32				0.00		
36	Trough rear wall	Weir	DMH-A8	DMH-B2		23.17	17.32				0.00		
37	Trough side walls	Weir	DMH-A9	DMH-B2		23.28	17.32				0.00		

Junction Input

SN	Element ID	Invert Elevation (ft)	Ground/Rim (Max) Elevation (ft)	Ground/Rim (Max) Offset (ft)
1	DMH-A10	23.34	31.20	7.86
2	DMH-A11	23.57	33.22	9.65
3	DMH-A12	23.93	32.52	8.59
4	DMH-A2	22.01	31.51	9.50
5	DMH-A2B	22.20	31.08	8.88
6	DMH-A4	22.70	30.00	7.30
7	DMH-A5	26.53	32.60	6.07
8	DMH-A6	22.93	29.76	6.83
9	DMH-A8	23.17	31.19	8.02
10	DMH-A9	23.28	31.16	7.88
11	DMH-B11	24.64	30.79	6.15
12	DMH-B12	27.76	31.66	3.90
13	DMH-B13	24.95	32.59	7.64
14	DMH-B14	26.89	31.99	5.10
15	DMH-B16	27.67	33.02	5.35
16	DMH-B17	28.13	33.38	5.25
17	DMH-B18	25.96	35.41	9.45
18	DMH-B2	17.32	31.00	13.68
19	DMH-B21	27.39	36.69	9.30
20	DMH-B3	17.56	31.74	14.18
21	DMH-B4	23.61	31.40	7.79
22	DMH-B6	23.66	30.99	7.33
23	DMH-B7	25.62	30.42	4.80
24	FES-B22 (Crown Colony Meadow)	27.50	39.34	11.84
25	HW-B5	26.69	28.69	2.00

Junction Results

SN	Element ID	Peak Inflow (cfs)	Peak Lateral Inflow (cfs)	Max HGL Elevation Attained (ft)	Min Freeboard Attained (ft)
1	DMH-A10	3.96	0.00	23.76	7.44
2	DMH-A11	4.37	0.00	24.59	8.63
3	DMH-A12	3.80	3.80	24.78	7.74
4	DMH-A2	20.58	0.00	23.59	7.92
5	DMH-A2B	20.57	0.00	23.64	7.44
6	DMH-A4	18.84	0.00	23.68	6.32
7	DMH-A5	14.34	14.34	28.27	4.33
8	DMH-A6	7.76	0.00	23.69	6.07
9	DMH-A8	6.20	0.00	23.69	7.50
10	DMH-A9	4.07	0.00	23.75	7.41
11	DMH-B11	35.00	0.00	26.83	3.96
12	DMH-B12	0.00	0.00	27.76	3.90
13	DMH-B13	35.71	0.00	27.67	4.92
14	DMH-B14	0.18	0.00	27.68	4.31
15	DMH-B16	0.00	0.00	27.67	5.35
16	DMH-B17	0.00	0.00	28.13	5.25
17	DMH-B18	39.74	0.00	28.40	7.01
18	DMH-B2	35.00	0.00	18.23	12.77
19	DMH-B21	43.81	0.00	29.49	7.20
20	DMH-B3	35.00	0.00	18.48	13.26
21	DMH-B4	35.00	0.00	26.06	5.34
22	DMH-B6	35.00	0.00	26.61	4.38
23	DMH-B7	0.83	0.00	26.61	3.81
24	FES-B22 (Crown Colony Meadow)	35.00	35.00	30.99	8.35
25	HW-B5	0.00	0.00	26.69	2.00

Channel Input

SN	Element ID	Length (ft)	Inlet Invert Elevation (ft)	Inlet Invert Offset (ft)	Outlet Invert Elevation (ft)	Outlet Invert Offset (ft)	Total Drop (ft)	Average Slope (%)	Shape	Height (ft)	Width (ft)	Manning's Roughness	Entrance Losses	Exit/Bend Losses	Additional Losses
1	Link-08	80.69	17.56	0.00	17.32	0.00	0.24	0.3000	Rectangular	7.000	12.000	0.0130	0.5000	0.5000	0.0000
2	Link-14	15.33	23.28	0.00	23.17	0.00	0.11	0.7200	Rectangular	1.000	4.250	0.0150	0.5000	0.5000	0.0000
3	Link-15	5.98	23.34	0.00	23.28	0.00	0.06	1.0000	Rectangular	6.000	13.500	0.0130	0.5000	0.5000	0.0000

Channel Results

SN	Element ID	Peak Flow (cfs)	Time of Peak Flow Occurrence (days hh:mm)	Design Flow Capacity (cfs)	Peak Flow Velocity (ft/sec)	Travel Time (min)	Peak Flow Depth (ft)
1	Link-08	35.00	0 00:23	1144.43	3.62	0.37	0.91
2	Link-14	4.09	0 12:13	27.58	2.65	0.10	0.50
3	Link-15	4.07	0 12:13	2004.08	1.32	0.08	0.44

Pipe Input

SN	Element ID	Length (ft)	Inlet Invert Elevation (ft)	Outlet Invert Elevation (ft)	Total Drop (ft)	Average Slope (%)	Pipe Shape	Pipe Diameter or Height (in)	Manning's Roughness	Entrance Losses	Exit/Bend Losses
1	Link-01	235.45	27.50	27.39	0.11	0.05	CIRCULAR	42	0.013	0.5	0.6
2	Link-02	201.49	27.39	25.96	1.43	0.71	CIRCULAR	42	0.013	0.5	0.6
3	Link-03	270.47	25.96	24.95	1.01	0.37	CIRCULAR	42	0.013	0.5	0.7
4	Link-04	172.12	24.95	24.64	0.31	0.18	CIRCULAR	42	0.013	0.5	0.6
5	Link-05	48.89	24.64	23.66	0.98	2.00	CIRCULAR	42	0.013	0.5	0.5
6	Link-06	96.01	23.66	23.61	0.05	0.05	CIRCULAR	42	0.013	0.5	0.5
7	Link-07	13.00	23.61	23.56	0.05	0.38	CIRCULAR	42	0.013	0.5	0.5
8	Link-09	13.26	17.32	17.28	0.04	0.30	Rectangular	90	0.013	0.5	0.5
9	Link-10A	116.10	22.01	21.44	0.57	0.49	CIRCULAR	72	0.013	0.5	0.6
10	Link-10B	12.51	22.20	22.01	0.19	1.52	Rectangular	48	0.013	0.5	0.5
11	Link-10C	14.53	24.00	23.90	0.10	0.69	CIRCULAR	15	0.015	0.5	0.5
12	Link-11A	31.59	22.70	22.23	0.47	1.49	Rectangular	48	0.013	0.5	0.5
13	Link-11B	463.07	26.53	24.50	2.03	0.44	CIRCULAR	24	0.013	0.5	0.5
14	Link-12	15.49	22.93	22.70	0.23	1.48	Rectangular	48	0.013	0.5	0.5
15	Link-12A	17.55	25.70	24.81	0.89	5.07	CIRCULAR	15	0.013	0.5	0.8
16	Link-12B	24.00	26.30	25.95	0.35	1.46	Rectangular	24	0.013	0.5	0.5
17	Link-13	21.80	23.17	22.93	0.24	1.10	Rectangular	78	0.013	0.5	0.8
18	Link-16	457.66	23.57	23.34	0.23	0.05	CIRCULAR	48	0.025	0.5	0.5
19	Link-17	246.06	23.93	23.57	0.36	0.15	CIRCULAR	48	0.025	0.5	0.5
20	Link-2A	58.83	31.78	29.31	2.47	4.20	CIRCULAR	12	0.013	0.5	0.5
21	Link-2B	60.34	30.67	29.31	1.36	2.25	CIRCULAR	12	0.013	0.5	0.6
22	Link-3A	34.64	27.49	25.69	1.80	5.20	CIRCULAR	12	0.013	0.5	1.0
23	Link-3B	16.31	28.17	26.89	1.28	7.85	CIRCULAR	12	0.013	0.5	0.8
24	Link-3C	48.85	27.67	25.49	2.18	4.46	CIRCULAR	12	0.013	0.5	0.8
25	Link-3D	79.26	28.13	27.67	0.46	0.58	CIRCULAR	12	0.013	0.5	0.8
26	Link-4A	128.18	27.76	25.59	2.17	1.69	CIRCULAR	12	0.013	0.5	0.5
27	Link-5A	21.58	25.62	25.19	0.43	1.99	CIRCULAR	12	0.013	0.5	0.6
28	Link-5B	12.74	26.32	25.82	0.50	3.92	CIRCULAR	12	0.013	0.5	0.8
29	Link-5C	23.38	26.39	25.62	0.77	3.29	CIRCULAR	12	0.013	0.5	0.8
30	Link-5D	24.23	27.17	26.44	0.73	3.01	CIRCULAR	12	0.013	0.5	0.8
31	Link-6A	17.00	26.69	26.30	0.39	2.29	Rectangular	24	0.013	0.5	0.8

Pipe Results

SN	Element ID	Peak Flow (cfs)	Time of Peak Flow Occurrence (days hh:mm)	Design Flow Capacity (cfs)	Peak Flow Velocity (ft/sec)	Travel Time (min)
1	Link-01	43.81	0 00:01	21.75	6.18	0.63
2	Link-02	39.74	0 00:01	84.76	7.92	0.42
3	Link-03	35.71	0 00:02	61.48	6.64	0.68
4	Link-04	35.00	0 00:18	42.70	5.75	0.50
5	Link-05	35.00	0 00:25	142.44	5.87	0.14
6	Link-06	35.00	0 00:23	22.96	4.79	0.33
7	Link-07	35.00	0 00:23	62.40	5.67	0.04
8	Link-09	35.00	0 00:22	986.72	3.72	0.06
9	Link-10A	20.60	0 12:10	296.74	3.05	0.63
10	Link-10B	20.58	0 12:10	449.56	2.16	0.10
11	Link-10C	1.79	0 12:10	4.64	3.09	0.08
12	Link-11A	18.86	0 12:10	444.95	2.31	0.23
13	Link-11B	13.98	0 12:10	14.98	5.38	1.43
14	Link-12	7.76	0 00:01	444.50	2.18	0.12
15	Link-12A	1.01	0 12:10	14.55	5.61	0.05
16	Link-12B	0.00	0 00:00	34.78	0.00	
17	Link-13	6.20	0 00:01	1857.09	1.25	0.29
18	Link-16	3.96	0 12:07	33.49	1.37	5.57
19	Link-17	4.37	0 00:05	57.14	1.64	2.50
20	Link-2A	0.00	0 00:00	7.30	0.00	
21	Link-2B	0.00	0 00:00	5.35	0.00	
22	Link-3A	0.18	0 00:06	8.12	0.41	1.41
23	Link-3B	0.00	0 00:00	9.98	0.00	
24	Link-3C	0.00	0 00:11	7.53	0.01	81.42
25	Link-3D	0.00	0 00:00	2.71	0.00	
26	Link-4A	0.00	0 00:00	4.64	0.00	
27	Link-5A	0.83	0 00:03	5.03	1.49	0.24
28	Link-5B	0.09	0 00:04	7.06	0.42	0.51
29	Link-5C	0.08	0 00:05	6.47	0.24	1.62
30	Link-5D	0.00	0 00:00	6.18	0.00	
31	Link-6A	0.00	0 00:00	43.63	0.00	

iii – Proposed Base Flow

Project Description

File Name	16120008 SSA PR BF.SPF

Project Options

Flow Units	CFS
Elevation Type	Elevation
Hydrology Method	SCS TR-20
Time of Concentration (TOC) Method	User-Defined
Link Routing Method	Hydrodynamic
Enable Overflow Ponding at Nodes	YES
Skip Steady State Analysis Time Periods	NO

Analysis Options

Start Analysis On	Dec 18, 2012	00:00:00
End Analysis On	Dec 19, 2012	00:00:00
Start Reporting On	Dec 18, 2012	00:00:00
Antecedent Dry Days	0	days
Runoff (Dry Weather) Time Step	0 01:00:00	days hh:mm:ss
Runoff (Wet Weather) Time Step	0 00:05:00	days hh:mm:ss
Reporting Time Step	0 00:05:00	days hh:mm:ss
Routing Time Step	1	seconds

Number of Elements

	Qty
Rain Gages	1
Subbasins	0
Nodes	42
Junctions	32
Outfalls	2
Flow Diversions	0
Inlets	8
Storage Nodes	0
Links	45
Channels	3
Pipes	38
Pumps	0
Orifices	0
Weirs	4
Outlets	0
Pollutants	0
Land Uses	0

Node Summary

SN	Element ID	Element Type	Invert Elevation (ft)	Ground/Rim (Max) Elevation (ft)	Peak Inflow (cfs)	Max HGL Elevation Attained (ft)	Min Freeboard Attained (ft)
1	DMH-A10	Junction	23.34	31.20	3.80	23.67	7.53
2	DMH-A11	Junction	23.57	33.22	4.37	24.59	8.63
3	DMH-A12	Junction	23.93	32.52	3.80	24.78	7.74
4	DMH-A2	Junction	22.01	31.51	16.99	23.59	7.92
5	DMH-A2B	Junction	22.20	31.08	12.27	23.60	7.48
6	DMH-A4	Junction	22.73	30.00	8.83	23.63	6.37
7	DMH-A5A	Junction	24.10	31.00	4.70	24.91	6.09
8	DMH-A5B	Junction	24.40	30.90	4.70	25.39	5.51
9	DMH-A5C	Junction	25.07	31.10	0.08	25.39	5.71
10	DMH-A5E	Junction	24.95	30.40	0.14	25.39	5.01
11	DMH-A5G	Junction	26.53	32.60	0.00	26.53	6.07
12	DMH-A6	Junction	22.93	29.76	7.65	23.62	6.14
13	DMH-A8	Junction	23.17	31.19	6.22	23.63	7.56
14	DMH-A9	Junction	23.28	31.16	3.80	23.66	7.50
15	DMH-B11A	Junction	24.64	30.79	4.70	25.65	5.14
16	DMH-B11B	Junction	24.64	30.84	4.70	25.64	5.20
17	DMH-B11C	Junction	24.64	30.80	0.00	24.64	6.16
18	DMH-B12	Junction	27.76	31.66	0.00	27.76	3.90
19	DMH-B13	Junction	24.95	32.59	4.87	25.85	6.74
20	DMH-B14	Junction	26.89	31.99	0.00	26.89	5.10
21	DMH-B16	Junction	27.67	33.02	0.00	27.67	5.35
22	DMH-B17	Junction	28.13	33.38	0.00	28.13	5.25
23	DMH-B18	Junction	25.96	35.41	5.08	26.66	8.75
24	DMH-B2	Junction	17.32	31.00	0.00	17.32	13.68
25	DMH-B21	Junction	27.39	36.69	5.87	28.03	8.66
26	DMH-B3	Junction	17.56	31.74	0.00	17.56	14.18
27	DMH-B4	Junction	23.61	31.40	0.00	23.61	7.79
28	DMH-B6	Junction	23.66	30.99	0.00	23.66	7.33
29	DMH-B7	Junction	25.62	30.42	0.00	25.62	4.80
30	FES-B22 (Crown Colony Meadow)	Junction	27.50	39.34	4.70	28.62	10.72
31	HW-B5	Junction	26.69	28.69	0.00	26.69	2.00
32	WQU	Junction	24.30	31.00	4.70	25.17	5.83
33	HW-A1 (Town Brook)	Outfall	21.44		16.99	23.46	
34	HW-B1 (Burgin Parkway)	Outfall	17.28		0.00	17.28	

Link Summary

SN	Element ID	Element Type	From (Inlet) Node	To (Outlet) Node	Length	Inlet Invert Elevation	Outlet Invert Elevation	Average Slope	Diameter or Height	Manning's Roughness	Peak Flow	Design Flow Capacity	Peak Flow Velocity
					(ft)	(ft)	(ft)	(%)	(in)		(cfs)	(cfs)	(ft/sec)
1	Link-01	Pipe	FES-B22 (Crown Colony Meadow)	DMH-B21	235.5	27.50	27.39	0.05	42	0.013	5.87	21.75	3.59
2	Link-02	Pipe	DMH-B21	DMH-B18	201.5	27.39	25.96	0.71	42	0.013	5.08	84.76	5.08
3	Link-03	Pipe	DMH-B18	DMH-B13	270.5	25.96	24.95	0.37	42	0.013	4.87	61.48	3.96
4	Link-04	Pipe	DMH-B13	DMH-B11A	172.1	24.95	24.64	0.18	42	0.013	4.70	42.70	3.52
5	Link-05	Pipe	DMH-B11C	DMH-B6	49.0	24.64	23.66	2.00	42	0.013	0.00	142.27	0.00
6	Link-06	Pipe	DMH-B6	DMH-B4	96.0	23.66	23.61	0.05	42	0.013	0.00	22.96	0.00
7	Link-07	Pipe	DMH-B4	DMH-B3	13.0	23.61	23.56	0.38	42	0.013	0.00	62.40	0.00
8	Link-09	Pipe	DMH-B2	HW-B1 (Burgin Parkway)	13.3	17.32	17.28	0.30	90	0.013	0.00	986.72	0.00
9	Link-10A	Pipe	DMH-A2	HW-A1 (Town Brook)	116.1	22.01	21.44	0.49	72	0.013	16.99	296.74	3.04
10	Link-10B	Pipe	DMH-A2B	DMH-A2	12.5	22.20	22.01	1.52	48	0.013	12.27	449.56	2.31
11	Link-11A	Pipe	DMH-A4	DMH-A2B	33.4	22.73	22.20	1.58	48	0.013	8.83	459.24	1.60
12	Link-11B	Pipe	DMH-A5A	DMH-A4	37.6	24.10	23.90	0.53	30	0.013	4.70	29.92	3.87
13	Link-11C	Pipe	WQU	DMH-A5A	10.0	24.30	24.20	1.00	30	0.013	4.70	41.02	3.54
14	Link-11D	Pipe	DMH-A5B	WQU	10.0	24.40	24.30	1.00	30	0.013	4.70	41.02	2.82
15	Link-11E	Pipe	DMH-A5C	DMH-A5B	15.6	25.07	24.90	1.09	15	0.013	0.08	6.75	0.62
16	Link-11F	Pipe	CB-A5D	DMH-A5C	54.8	25.72	25.17	1.00	15	0.013	0.00	6.47	0.00
17	Link-11G	Pipe	DMH-A5E	DMH-A5B	41.2	24.95	24.50	1.09	12	0.013	0.14	3.72	0.51
18	Link-11H	Pipe	CB-A5F	DMH-A5E	65.2	25.70	25.05	1.00	12	0.013	0.00	3.56	0.00
19	Link-11I	Pipe	DMH-B11B	DMH-A5B	70.9	24.64	24.50	0.20	30	0.013	4.70	18.23	2.86
20	Link-11J	Pipe	DMH-B11A	DMH-B11B	12.2	24.64	24.64	0.00	72	0.013	4.70	59.96	0.86
21	Link-11K	Pipe	DMH-A5G	DMH-B11B	313.3	26.53	25.05	0.47	24	0.013	0.00	15.55	0.00
22	Link-12A	Pipe	DMH-A6	DMH-A4	13.6	22.93	22.73	1.47	48	0.013	7.65	441.72	2.24
23	Link-12B	Pipe	DMH-B4	DMH-A6	24.0	26.30	25.95	1.46	24	0.013	0.00	34.78	0.00
24	Link-13	Pipe	DMH-A8	DMH-A6	21.8	23.17	22.93	1.10	78	0.013	6.22	1857.09	1.26
25	Link-16	Pipe	DMH-A11	DMH-A10	457.7	23.57	23.34	0.05	48	0.025	3.80	33.49	1.36
26	Link-17	Pipe	DMH-A12	DMH-A11	246.1	23.93	23.57	0.15	48	0.025	4.37	57.14	1.64
27	Link-2A	Pipe	CB-B19	DMH-B18	58.8	31.78	29.31	4.20	12	0.013	0.00	7.30	0.00
28	Link-2B	Pipe	CB-B20	DMH-B18	60.3	30.67	29.31	2.25	12	0.013	0.00	5.35	0.00
29	Link-3A	Pipe	DMH-B14	DMH-B13	34.6	27.49	25.69	5.20	12	0.013	0.00	8.12	0.00
30	Link-3B	Pipe	CB-B15	DMH-B14	16.3	28.17	26.89	7.85	12	0.013	0.00	9.98	0.00
31	Link-3C	Pipe	DMH-B16	DMH-B13	48.9	27.67	25.49	4.46	12	0.013	0.00	7.53	0.00
32	Link-3D	Pipe	DMH-B17	DMH-B16	79.3	28.13	27.67	0.58	12	0.013	0.00	2.71	0.00
33	Link-4A	Pipe	DMH-B12	DMH-B11A	128.2	27.76	25.59	1.69	12	0.013	0.00	4.64	0.00
34	Link-5A	Pipe	DMH-B7	DMH-B6	21.6	25.62	25.19	1.99	12	0.013	0.00	5.03	0.00
35	Link-5B	Pipe	CB-B8	DMH-B7	12.7	26.32	25.82	3.92	12	0.013	0.00	7.06	0.00
36	Link-5C	Pipe	CB-B9	DMH-B7	23.4	26.39	25.62	3.29	12	0.013	0.00	6.47	0.00
37	Link-5D	Pipe	CB-B10	CB-B9	24.2	27.17	26.44	3.01	12	0.013	0.00	6.18	0.00
38	Link-6A	Pipe	HW-B5	DMH-B4	17.0	26.69	26.30	2.29	24	0.013	0.00	43.63	0.00
39	Link-08	Channel	DMH-B3	DMH-B2	80.7	17.56	17.32	0.30	84	0.013	0.00	1144.43	0.00
40	Link-14	Channel	DMH-A9	DMH-A8	15.3	23.28	23.17	0.72	12	0.015	3.80	27.58	2.51
41	Link-15	Channel	DMH-A10	DMH-A9	6.0	23.34	23.28	1.00	72	0.013	3.80	2004.08	1.31
42	Diversion Weir	Weir	DMH-B11A	DMH-B11C		24.64	24.64				0.00		
43	Trough entrance	Weir	DMH-A9	DMH-B2		23.28	17.32				0.00		
44	Trough rear wall	Weir	DMH-A8	DMH-B2		23.17	17.32				0.00		
45	Trough side walls	Weir	DMH-A9	DMH-B2		23.28	17.32				0.00		

Junction Input

SN	Element ID	Invert Elevation (ft)	Ground/Rim (Max) Elevation (ft)	Ground/Rim (Max) Offset (ft)
1	DMH-A10	23.34	31.20	7.86
2	DMH-A11	23.57	33.22	9.65
3	DMH-A12	23.93	32.52	8.59
4	DMH-A2	22.01	31.51	9.50
5	DMH-A2B	22.20	31.08	8.88
6	DMH-A4	22.73	30.00	7.27
7	DMH-A5A	24.10	31.00	6.90
8	DMH-A5B	24.40	30.90	6.50
9	DMH-A5C	25.07	31.10	6.03
10	DMH-A5E	24.95	30.40	5.45
11	DMH-A5G	26.53	32.60	6.07
12	DMH-A6	22.93	29.76	6.83
13	DMH-A8	23.17	31.19	8.02
14	DMH-A9	23.28	31.16	7.88
15	DMH-B11A	24.64	30.79	6.15
16	DMH-B11B	24.64	30.84	6.20
17	DMH-B11C	24.64	30.80	6.16
18	DMH-B12	27.76	31.66	3.90
19	DMH-B13	24.95	32.59	7.64
20	DMH-B14	26.89	31.99	5.10
21	DMH-B16	27.67	33.02	5.35
22	DMH-B17	28.13	33.38	5.25
23	DMH-B18	25.96	35.41	9.45
24	DMH-B2	17.32	31.00	13.68
25	DMH-B21	27.39	36.69	9.30
26	DMH-B3	17.56	31.74	14.18
27	DMH-B4	23.61	31.40	7.79
28	DMH-B6	23.66	30.99	7.33
29	DMH-B7	25.62	30.42	4.80
30	FES-B22 (Crown Colony Meadow)	27.50	39.34	11.84
31	HW-B5	26.69	28.69	2.00
32	WQU	24.30	31.00	6.70

Junction Results

SN	Element ID	Peak Inflow (cfs)	Peak Lateral Inflow (cfs)	Max HGL Elevation Attained (ft)	Min Freeboard Attained (ft)
1	DMH-A10	3.80	0.00	23.67	7.53
2	DMH-A11	4.37	0.00	24.59	8.63
3	DMH-A12	3.80	3.80	24.78	7.74
4	DMH-A2	16.99	0.00	23.59	7.92
5	DMH-A2B	12.27	0.00	23.60	7.48
6	DMH-A4	8.83	0.00	23.63	6.37
7	DMH-A5A	4.70	0.00	24.91	6.09
8	DMH-A5B	4.70	0.00	25.39	5.51
9	DMH-A5C	0.08	0.00	25.39	5.71
10	DMH-A5E	0.14	0.00	25.39	5.01
11	DMH-A5G	0.00	0.00	26.53	6.07
12	DMH-A6	7.65	0.00	23.62	6.14
13	DMH-A8	6.22	0.00	23.63	7.56
14	DMH-A9	3.80	0.00	23.66	7.50
15	DMH-B11A	4.70	0.00	25.65	5.14
16	DMH-B11B	4.70	0.00	25.64	5.20
17	DMH-B11C	0.00	0.00	24.64	6.16
18	DMH-B12	0.00	0.00	27.76	3.90
19	DMH-B13	4.87	0.00	25.85	6.74
20	DMH-B14	0.00	0.00	26.89	5.10
21	DMH-B16	0.00	0.00	27.67	5.35
22	DMH-B17	0.00	0.00	28.13	5.25
23	DMH-B18	5.08	0.00	26.66	8.75
24	DMH-B2	0.00	0.00	17.32	13.68
25	DMH-B21	5.87	0.00	28.03	8.66
26	DMH-B3	0.00	0.00	17.56	14.18
27	DMH-B4	0.00	0.00	23.61	7.79
28	DMH-B6	0.00	0.00	23.66	7.33
29	DMH-B7	0.00	0.00	25.62	4.80
30	FES-B22 (Crown Colony Meadow)	4.70	4.70	28.62	10.72
31	HW-B5	0.00	0.00	26.69	2.00
32	WQU	4.70	0.00	25.17	5.83

Channel Input

SN	Element ID	Length (ft)	Inlet Invert Elevation (ft)	Inlet Invert Offset (ft)	Outlet Invert Elevation (ft)	Outlet Invert Offset (ft)	Total Drop (ft)	Average Slope (%)	Shape	Height (ft)	Width (ft)	Manning's Roughness	Entrance Losses	Exit/Bend Losses	Additional Losses
1	Link-08	80.69	17.56	0.00	17.32	0.00	0.24	0.3000	Rectangular	7.000	12.000	0.0130	0.5000	0.5000	0.0000
2	Link-14	15.33	23.28	0.00	23.17	0.00	0.11	0.7200	Rectangular	1.000	4.250	0.0150	0.5000	0.5000	0.0000
3	Link-15	5.98	23.34	0.00	23.28	0.00	0.06	1.0000	Rectangular	6.000	13.500	0.0130	0.5000	0.5000	0.0000

Channel Results

SN	Element ID	Peak Flow	Time of Peak Flow Occurrence	Design Flow Capacity	Peak Flow Velocity	Travel Time	Peak Flow Depth
		(cfs)	(days hh:mm)	(cfs)	(ft/sec)	(min)	(ft)
1	Link-08	0.00	0 00:00	1144.43	0.00		0.00
2	Link-14	3.80	0 11:26	27.58	2.51	0.10	0.36
3	Link-15	3.80	0 11:26	2004.08	1.31	0.08	0.35

Pipe Input

SN	Element ID	Length (ft)	Inlet Invert Elevation (ft)	Outlet Invert Elevation (ft)	Total Drop (ft)	Average Slope (%)	Pipe Shape	Pipe Diameter or Height (in)	Manning's Roughness	Entrance Losses	Exit/Bend Losses
1	Link-01	235.45	27.50	27.39	0.11	0.05	CIRCULAR	42	0.013	0.5	0.6
2	Link-02	201.49	27.39	25.96	1.43	0.71	CIRCULAR	42	0.013	0.5	0.6
3	Link-03	270.47	25.96	24.95	1.01	0.37	CIRCULAR	42	0.013	0.5	0.7
4	Link-04	172.12	24.95	24.64	0.31	0.18	CIRCULAR	42	0.013	0.5	0.6
5	Link-05	49.01	24.64	23.66	0.98	2.00	CIRCULAR	42	0.013	0.5	0.5
6	Link-06	96.01	23.66	23.61	0.05	0.05	CIRCULAR	42	0.013	0.5	0.5
7	Link-07	13.00	23.61	23.56	0.05	0.38	CIRCULAR	42	0.013	0.5	0.5
8	Link-09	13.26	17.32	17.28	0.04	0.30	Rectangular	90	0.013	0.5	0.5
9	Link-10A	116.10	22.01	21.44	0.57	0.49	CIRCULAR	72	0.013	0.5	0.6
10	Link-10B	12.51	22.20	22.01	0.19	1.52	Rectangular	48	0.013	0.5	0.5
11	Link-11A	33.44	22.73	22.20	0.53	1.58	Rectangular	48	0.013	0.5	0.5
12	Link-11B	37.59	24.10	23.90	0.20	0.53	CIRCULAR	30	0.013	0.5	0.5
13	Link-11C	10.00	24.30	24.20	0.10	1.00	CIRCULAR	30	0.013	0.5	0.6
14	Link-11D	10.00	24.40	24.30	0.10	1.00	CIRCULAR	30	0.013	0.5	0.9
15	Link-11E	15.55	25.07	24.90	0.17	1.09	CIRCULAR	15	0.013	0.5	0.8
16	Link-11F	54.78	25.72	25.17	0.55	1.00	CIRCULAR	15	0.013	0.5	0.8
17	Link-11G	41.17	24.95	24.50	0.45	1.09	CIRCULAR	12	0.013	0.5	0.5
18	Link-11H	65.20	25.70	25.05	0.65	1.00	CIRCULAR	12	0.013	0.5	0.8
19	Link-11I	70.86	24.64	24.50	0.14	0.20	CIRCULAR	30	0.013	0.5	0.5
20	Link-11J	12.15	24.64	24.64	0.00	0.00	Rectangular	72	0.013	0.5	0.5
21	Link-11K	313.25	26.53	25.05	1.48	0.47	CIRCULAR	24	0.013	0.5	0.5
22	Link-12A	13.64	22.93	22.73	0.20	1.47	Rectangular	48	0.013	0.5	0.5
23	Link-12B	24.00	26.30	25.95	0.35	1.46	Rectangular	24	0.013	0.5	0.5
24	Link-13	21.80	23.17	22.93	0.24	1.10	Rectangular	78	0.013	0.5	0.8
25	Link-16	457.66	23.57	23.34	0.23	0.05	CIRCULAR	48	0.025	0.5	0.5
26	Link-17	246.06	23.93	23.57	0.36	0.15	CIRCULAR	48	0.025	0.5	0.5
27	Link-2A	58.83	31.78	29.31	2.47	4.20	CIRCULAR	12	0.013	0.5	0.5
28	Link-2B	60.34	30.67	29.31	1.36	2.25	CIRCULAR	12	0.013	0.5	0.6
29	Link-3A	34.64	27.49	25.69	1.80	5.20	CIRCULAR	12	0.013	0.5	1.0
30	Link-3B	16.31	28.17	26.89	1.28	7.85	CIRCULAR	12	0.013	0.5	0.8
31	Link-3C	48.85	27.67	25.49	2.18	4.46	CIRCULAR	12	0.013	0.5	0.8
32	Link-3D	79.26	28.13	27.67	0.46	0.58	CIRCULAR	12	0.013	0.5	0.8
33	Link-4A	128.18	27.76	25.59	2.17	1.69	CIRCULAR	12	0.013	0.5	0.5
34	Link-5A	21.58	25.62	25.19	0.43	1.99	CIRCULAR	12	0.013	0.5	0.6
35	Link-5B	12.74	26.32	25.82	0.50	3.92	CIRCULAR	12	0.013	0.5	0.8
36	Link-5C	23.38	26.39	25.62	0.77	3.29	CIRCULAR	12	0.013	0.5	0.8
37	Link-5D	24.23	27.17	26.44	0.73	3.01	CIRCULAR	12	0.013	0.5	0.8
38	Link-6A	17.00	26.69	26.30	0.39	2.29	Rectangular	24	0.013	0.5	0.8

Pipe Results

SN	Element ID	Peak Flow (cfs)	Time of Peak Flow Occurrence (days hh:mm)	Design Flow Capacity (cfs)	Peak Flow Velocity (ft/sec)	Travel Time (min)
1	Link-01	5.87	0 00:01	21.75	3.59	1.09
2	Link-02	5.08	0 00:02	84.76	5.08	0.66
3	Link-03	4.87	0 00:06	61.48	3.96	1.14
4	Link-04	4.70	0 11:26	42.70	3.52	0.81
5	Link-05	0.00	0 00:00	142.27	0.00	
6	Link-06	0.00	0 00:00	22.96	0.00	
7	Link-07	0.00	0 00:00	62.40	0.00	
8	Link-09	0.00	0 00:00	986.72	0.00	
9	Link-10A	16.99	0 00:00	296.74	3.04	0.64
10	Link-10B	12.27	0 00:00	449.56	2.31	0.09
11	Link-11A	8.83	0 00:00	459.24	1.60	0.35
12	Link-11B	4.70	0 11:25	29.92	3.87	0.16
13	Link-11C	4.70	0 11:25	41.02	3.54	0.05
14	Link-11D	4.70	0 11:25	41.02	2.82	0.06
15	Link-11E	0.08	0 00:07	6.75	0.62	0.42
16	Link-11F	0.00	0 00:00	6.47	0.00	
17	Link-11G	0.14	0 00:06	3.72	0.51	1.35
18	Link-11H	0.00	0 00:00	3.56	0.00	
19	Link-11I	4.70	0 11:25	18.23	2.86	0.41
20	Link-11J	4.70	0 14:19	59.96	0.86	0.24
21	Link-11K	0.00	0 00:00	15.55	0.00	
22	Link-12A	7.65	0 00:01	441.72	2.24	0.10
23	Link-12B	0.00	0 00:00	34.78	0.00	
24	Link-13	6.22	0 00:01	1857.09	1.26	0.29
25	Link-16	3.80	0 11:25	33.49	1.36	5.61
26	Link-17	4.37	0 00:05	57.14	1.64	2.50
27	Link-2A	0.00	0 00:00	7.30	0.00	
28	Link-2B	0.00	0 00:00	5.35	0.00	
29	Link-3A	0.00	0 00:00	8.12	0.00	
30	Link-3B	0.00	0 00:00	9.98	0.00	
31	Link-3C	0.00	0 00:00	7.53	0.00	
32	Link-3D	0.00	0 00:00	2.71	0.00	
33	Link-4A	0.00	0 00:00	4.64	0.00	
34	Link-5A	0.00	0 00:00	5.03	0.00	
35	Link-5B	0.00	0 00:00	7.06	0.00	
36	Link-5C	0.00	0 00:00	6.47	0.00	
37	Link-5D	0.00	0 00:00	6.18	0.00	
38	Link-6A	0.00	0 00:00	43.63	0.00	

iv – Proposed Design Flow

Project Description

File Name	16120008 SSA PR.SPF

Project Options

Flow Units	CFS
Elevation Type	Elevation
Hydrology Method	SCS TR-20
Time of Concentration (TOC) Method	User-Defined
Link Routing Method	Hydrodynamic
Enable Overflow Ponding at Nodes	YES
Skip Steady State Analysis Time Periods	NO

Analysis Options

Start Analysis On	Dec 18, 2012	00:00:00
End Analysis On	Dec 19, 2012	00:00:00
Start Reporting On	Dec 18, 2012	00:00:00
Antecedent Dry Days	0	days
Runoff (Dry Weather) Time Step	0 01:00:00	days hh:mm:ss
Runoff (Wet Weather) Time Step	0 00:05:00	days hh:mm:ss
Reporting Time Step	0 00:05:00	days hh:mm:ss
Routing Time Step	1	seconds

Number of Elements

	Qty
Rain Gages	1
Subbasins	3
Nodes	42
Junctions	32
Outfalls	2
Flow Diversions	0
Inlets	8
Storage Nodes	0
Links	45
Channels	3
Pipes	38
Pumps	0
Orifices	0
Weirs	4
Outlets	0
Pollutants	0
Land Uses	0

Subbasin Summary

SN	Subbasin ID	Area (ac)	Weighted Curve Number	Total Rainfall (in)	Total Runoff (in)	Total Runoff Volume (ft^3)	Peak Runoff (cfs)	Time of Concentration (days hh:mm:ss)
1	Sub-01	3.92	92.00	4.7	3.80	54043.58	14.41	0 00:05:00
2	Sub-02	0.25	98.00	4.7	4.46	4098.77	1.01	0 00:05:00
3	Sub-03	0.46	98.00	4.7	4.46	7371.31	1.79	0 00:05:00

Node Summary

SN	Element ID	Element Type	Invert Elevation (ft)	Ground/Rim (Max) Elevation (ft)	Peak Inflow (cfs)	Max HGL Elevation Attained (ft)	Min Freeboard Attained (ft)
1	DMH-A10	Junction	23.34	31.20	3.89	23.78	7.42
2	DMH-A11	Junction	23.57	33.22	4.34	24.57	8.65
3	DMH-A12	Junction	23.93	32.52	3.80	24.78	7.74
4	DMH-A2	Junction	22.01	31.51	21.80	23.61	7.90
5	DMH-A2B	Junction	22.20	31.08	21.80	23.67	7.41
6	DMH-A4	Junction	22.73	30.00	21.80	23.71	6.29
7	DMH-A5A	Junction	24.10	31.00	17.96	25.93	5.07
8	DMH-A5B	Junction	24.40	30.90	17.97	26.79	4.11
9	DMH-A5C	Junction	25.07	31.10	1.38	26.81	4.29
10	DMH-A5E	Junction	24.95	30.40	1.79	26.97	3.43
11	DMH-A5G	Junction	26.53	32.60	14.34	28.44	4.16
12	DMH-A6	Junction	22.93	29.76	7.65	23.72	6.04
13	DMH-A8	Junction	23.17	31.19	6.22	23.72	7.47
14	DMH-A9	Junction	23.28	31.16	3.93	23.77	7.39
15	DMH-B11A	Junction	24.64	30.79	35.24	27.04	3.75
16	DMH-B11B	Junction	24.64	30.84	20.17	27.04	3.80
17	DMH-B11C	Junction	24.64	30.80	33.80	26.76	4.04
18	DMH-B12	Junction	27.76	31.66	0.00	27.76	3.90
19	DMH-B13	Junction	24.95	32.59	35.69	27.76	4.83
20	DMH-B14	Junction	26.89	31.99	0.06	27.76	4.23
21	DMH-B16	Junction	27.67	33.02	0.01	27.76	5.26
22	DMH-B17	Junction	28.13	33.38	0.00	28.13	5.25
23	DMH-B18	Junction	25.96	35.41	39.74	28.44	6.97
24	DMH-B2	Junction	17.32	31.00	33.77	18.21	12.79
25	DMH-B21	Junction	27.39	36.69	43.81	29.49	7.20
26	DMH-B3	Junction	17.56	31.74	33.78	18.45	13.29
27	DMH-B4	Junction	23.61	31.40	33.78	26.01	5.39
28	DMH-B6	Junction	23.66	30.99	33.79	26.54	4.45
29	DMH-B7	Junction	25.62	30.42	0.15	26.54	3.88
30	FES-B22 (Crown Colony Meadow)	Junction	27.50	39.34	35.00	30.99	8.35
31	HW-B5	Junction	26.69	28.69	0.00	26.69	2.00
32	WQU	Junction	24.30	31.00	17.96	26.40	4.60
33	HW-A1 (Town Brook)	Outfall	21.44		21.81	23.46	
34	HW-B1 (Burgin Parkway)	Outfall	17.28		33.77	17.92	

Link Summary

SN	Element ID	Element Type	From (Inlet) Node	To (Outlet) Node	Length	Inlet Invert Elevation	Outlet Invert Elevation	Average Slope	Diameter or Height	Manning's Roughness	Peak Flow	Design Flow Capacity	Peak Flow Velocity
					(ft)	(ft)	(ft)	(%)	(in)		(cfs)	(cfs)	(ft/sec)
1	Link-01	Pipe	FES-B22 (Crown Colony Meadow)	DMH-B21	235.5	27.50	27.39	0.05	42	0.013	43.81	21.75	6.18
2	Link-02	Pipe	DMH-B21	DMH-B18	201.5	27.39	25.96	0.71	42	0.013	39.74	84.76	7.92
3	Link-03	Pipe	DMH-B18	DMH-B13	270.5	25.96	24.95	0.37	42	0.013	35.69	61.48	6.62
4	Link-04	Pipe	DMH-B13	DMH-B11A	172.1	24.95	24.64	0.18	42	0.013	35.24	42.70	6.59
5	Link-05	Pipe	DMH-B11C	DMH-B6	49.0	24.64	23.66	2.00	42	0.013	33.79	142.27	6.88
6	Link-06	Pipe	DMH-B6	DMH-B4	96.0	23.66	23.61	0.05	42	0.013	33.78	22.96	4.73
7	Link-07	Pipe	DMH-B4	DMH-B3	13.0	23.61	23.56	0.38	42	0.013	33.78	62.40	5.60
8	Link-09	Pipe	DMH-B2	HW-B1 (Burgin Parkway)	13.3	17.32	17.28	0.30	90	0.013	33.77	986.72	3.68
9	Link-10A	Pipe	DMH-A2	HW-A1 (Town Brook)	116.1	22.01	21.44	0.49	72	0.013	21.81	296.74	3.05
10	Link-10B	Pipe	DMH-A2B	DMH-A2	12.5	22.20	22.01	1.52	48	0.013	21.80	449.56	2.31
11	Link-11A	Pipe	DMH-A4	DMH-A2B	33.4	22.73	22.20	1.58	48	0.013	21.80	459.24	2.61
12	Link-11B	Pipe	DMH-A5A	DMH-A4	37.6	24.10	23.90	0.53	30	0.013	17.96	29.92	5.35
13	Link-11C	Pipe	WQU	DMH-A5A	10.0	24.30	24.20	1.00	30	0.013	17.96	41.02	4.49
14	Link-11D	Pipe	DMH-A5B	WQU	10.0	24.40	24.30	1.00	30	0.013	17.96	41.02	3.87
15	Link-11E	Pipe	DMH-A5C	DMH-A5B	15.6	25.07	24.90	1.09	15	0.013	1.38	6.75	2.05
16	Link-11F	Pipe	CB-A5D	DMH-A5C	54.8	25.72	25.17	1.00	15	0.013	1.00	6.47	1.04
17	Link-11G	Pipe	DMH-A5E	DMH-A5B	41.2	24.95	24.50	1.09	12	0.013	1.79	3.72	2.28
18	Link-11H	Pipe	CB-A5F	DMH-A5E	65.2	25.70	25.05	1.00	12	0.013	1.79	3.56	2.28
19	Link-11I	Pipe	DMH-B11B	DMH-A5B	70.9	24.64	24.50	0.20	30	0.013	15.26	18.23	4.07
20	Link-11J	Pipe	DMH-B11A	DMH-B11B	12.2	24.64	24.64	0.00	72	0.013	20.17	59.96	2.68
21	Link-11K	Pipe	DMH-A5G	DMH-B11B	313.3	26.53	25.05	0.47	24	0.013	14.14	15.55	4.53
22	Link-12A	Pipe	DMH-A6	DMH-A4	13.6	22.93	22.73	1.47	48	0.013	7.65	441.72	2.24
23	Link-12B	Pipe	DMH-B4	DMH-A6	24.0	26.30	25.95	1.46	24	0.013	0.00	34.78	0.00
24	Link-13	Pipe	DMH-A8	DMH-A6	21.8	23.17	22.93	1.10	78	0.013	6.22	1857.09	1.26
25	Link-16	Pipe	DMH-A11	DMH-A10	457.7	23.57	23.34	0.05	48	0.025	3.89	33.49	1.34
26	Link-17	Pipe	DMH-A12	DMH-A11	246.1	23.93	23.57	0.15	48	0.025	4.34	57.14	1.64
27	Link-2A	Pipe	CB-B19	DMH-B18	58.8	31.78	29.31	4.20	12	0.013	0.00	7.30	0.00
28	Link-2B	Pipe	CB-B20	DMH-B18	60.3	30.67	29.31	2.25	12	0.013	0.00	5.35	0.00
29	Link-3A	Pipe	DMH-B14	DMH-B13	34.6	27.49	25.69	5.20	12	0.013	0.06	8.12	0.15
30	Link-3B	Pipe	CB-B15	DMH-B14	16.3	28.17	26.89	7.85	12	0.013	0.00	9.98	0.00
31	Link-3C	Pipe	DMH-B16	DMH-B13	48.9	27.67	25.49	4.46	12	0.013	0.01	7.53	0.03
32	Link-3D	Pipe	DMH-B17	DMH-B16	79.3	28.13	27.67	0.58	12	0.013	0.00	2.71	0.00
33	Link-4A	Pipe	DMH-B12	DMH-B11A	128.2	27.76	25.59	1.69	12	0.013	0.00	4.64	0.00
34	Link-5A	Pipe	DMH-B7	DMH-B6	21.6	25.62	25.19	1.99	12	0.013	0.15	5.03	0.61
35	Link-5B	Pipe	CB-B8	DMH-B7	12.7	26.32	25.82	3.92	12	0.013	0.02	7.06	0.10
36	Link-5C	Pipe	CB-B9	DMH-B7	23.4	26.39	25.62	3.29	12	0.013	0.02	6.47	0.08
37	Link-5D	Pipe	CB-B10	CB-B9	24.2	27.17	26.44	3.01	12	0.013	0.00	6.18	0.00
38	Link-6A	Pipe	HW-B5	DMH-B4	17.0	26.69	26.30	2.29	24	0.013	0.00	43.63	0.00
39	Link-08	Channel	DMH-B3	DMH-B2	80.7	17.56	17.32	0.30	84	0.013	33.77	1144.43	3.31
40	Link-14	Channel	DMH-A9	DMH-A8	15.3	23.28	23.17	0.72	12	0.015	3.94	27.58	2.11
41	Link-15	Channel	DMH-A10	DMH-A9	6.0	23.34	23.28	1.00	72	0.013	3.93	2004.08	1.31
42	Diversion Weir	Weir	DMH-B11A	DMH-B11C		24.64	24.64				33.80		
43	Trough entrance	Weir	DMH-A9	DMH-B2		23.28	17.32				0.00		
44	Trough rear wall	Weir	DMH-A8	DMH-B2		23.17	17.32				0.00		
45	Trough side walls	Weir	DMH-A9	DMH-B2		23.28	17.32				0.00		

Junction Input

SN	Element ID	Invert Elevation (ft)	Ground/Rim (Max) Elevation (ft)	Ground/Rim (Max) Offset (ft)
1	DMH-A10	23.34	31.20	7.86
2	DMH-A11	23.57	33.22	9.65
3	DMH-A12	23.93	32.52	8.59
4	DMH-A2	22.01	31.51	9.50
5	DMH-A2B	22.20	31.08	8.88
6	DMH-A4	22.73	30.00	7.27
7	DMH-A5A	24.10	31.00	6.90
8	DMH-A5B	24.40	30.90	6.50
9	DMH-A5C	25.07	31.10	6.03
10	DMH-A5E	24.95	30.40	5.45
11	DMH-A5G	26.53	32.60	6.07
12	DMH-A6	22.93	29.76	6.83
13	DMH-A8	23.17	31.19	8.02
14	DMH-A9	23.28	31.16	7.88
15	DMH-B11A	24.64	30.79	6.15
16	DMH-B11B	24.64	30.84	6.20
17	DMH-B11C	24.64	30.80	6.16
18	DMH-B12	27.76	31.66	3.90
19	DMH-B13	24.95	32.59	7.64
20	DMH-B14	26.89	31.99	5.10
21	DMH-B16	27.67	33.02	5.35
22	DMH-B17	28.13	33.38	5.25
23	DMH-B18	25.96	35.41	9.45
24	DMH-B2	17.32	31.00	13.68
25	DMH-B21	27.39	36.69	9.30
26	DMH-B3	17.56	31.74	14.18
27	DMH-B4	23.61	31.40	7.79
28	DMH-B6	23.66	30.99	7.33
29	DMH-B7	25.62	30.42	4.80
30	FES-B22 (Crown Colony Meadow)	27.50	39.34	11.84
31	HW-B5	26.69	28.69	2.00
32	WQU	24.30	31.00	6.70

Junction Results

SN	Element ID	Peak Inflow (cfs)	Peak Lateral Inflow (cfs)	Max HGL Elevation Attained (ft)	Min Freeboard Attained (ft)
1	DMH-A10	3.89	0.00	23.78	7.42
2	DMH-A11	4.34	0.00	24.57	8.65
3	DMH-A12	3.80	3.80	24.78	7.74
4	DMH-A2	21.80	0.00	23.61	7.90
5	DMH-A2B	21.80	0.00	23.67	7.41
6	DMH-A4	21.80	0.00	23.71	6.29
7	DMH-A5A	17.96	0.00	25.93	5.07
8	DMH-A5B	17.97	0.00	26.79	4.11
9	DMH-A5C	1.38	0.00	26.81	4.29
10	DMH-A5E	1.79	0.00	26.97	3.43
11	DMH-A5G	14.34	14.34	28.44	4.16
12	DMH-A6	7.65	0.00	23.72	6.04
13	DMH-A8	6.22	0.00	23.72	7.47
14	DMH-A9	3.93	0.00	23.77	7.39
15	DMH-B11A	35.24	0.00	27.04	3.75
16	DMH-B11B	20.17	0.00	27.04	3.80
17	DMH-B11C	33.80	0.00	26.76	4.04
18	DMH-B12	0.00	0.00	27.76	3.90
19	DMH-B13	35.69	0.00	27.76	4.83
20	DMH-B14	0.06	0.00	27.76	4.23
21	DMH-B16	0.01	0.00	27.76	5.26
22	DMH-B17	0.00	0.00	28.13	5.25
23	DMH-B18	39.74	0.00	28.44	6.97
24	DMH-B2	33.77	0.00	18.21	12.79
25	DMH-B21	43.81	0.00	29.49	7.20
26	DMH-B3	33.78	0.00	18.45	13.29
27	DMH-B4	33.78	0.00	26.01	5.39
28	DMH-B6	33.79	0.00	26.54	4.45
29	DMH-B7	0.15	0.00	26.54	3.88
30	FES-B22 (Crown Colony Meadow)	35.00	35.00	30.99	8.35
31	HW-B5	0.00	0.00	26.69	2.00
32	WQU	17.96	0.00	26.40	4.60

Channel Input

SN	Element ID	Length (ft)	Inlet Invert Elevation (ft)	Inlet Invert Offset (ft)	Outlet Invert Elevation (ft)	Outlet Invert Offset (ft)	Total Drop (ft)	Average Slope (%)	Shape	Height (ft)	Width (ft)	Manning's Roughness	Entrance Losses	Exit/Bend Losses	Additional Losses
1	Link-08	80.69	17.56	0.00	17.32	0.00	0.24	0.3000	Rectangular	7.000	12.000	0.0130	0.5000	0.5000	0.0000
2	Link-14	15.33	23.28	0.00	23.17	0.00	0.11	0.7200	Rectangular	1.000	4.250	0.0150	0.5000	0.5000	0.0000
3	Link-15	5.98	23.34	0.00	23.28	0.00	0.06	1.0000	Rectangular	6.000	13.500	0.0130	0.5000	0.5000	0.0000

Channel Results

SN	Element ID	Peak Flow (cfs)	Time of Peak Flow Occurrence (days hh:mm)	Design Flow Capacity (cfs)	Peak Flow Velocity (ft/sec)	Travel Time (min)	Peak Flow Depth (ft)
1	Link-08	33.77	0 12:11	1144.43	3.31	0.41	0.89
2	Link-14	3.94	0 12:14	27.58	2.11	0.12	0.52
3	Link-15	3.93	0 12:14	2004.08	1.31	0.08	0.46

Pipe Input

SN	Element ID	Length (ft)	Inlet Invert Elevation (ft)	Outlet Invert Elevation (ft)	Total Drop (ft)	Average Slope (%)	Pipe Shape	Pipe Diameter or Height (in)	Manning's Roughness	Entrance Losses	Exit/Bend Losses
1	Link-01	235.45	27.50	27.39	0.11	0.05	CIRCULAR	42	0.013	0.5	0.6
2	Link-02	201.49	27.39	25.96	1.43	0.71	CIRCULAR	42	0.013	0.5	0.6
3	Link-03	270.47	25.96	24.95	1.01	0.37	CIRCULAR	42	0.013	0.5	0.7
4	Link-04	172.12	24.95	24.64	0.31	0.18	CIRCULAR	42	0.013	0.5	0.6
5	Link-05	49.01	24.64	23.66	0.98	2.00	CIRCULAR	42	0.013	0.5	0.5
6	Link-06	96.01	23.66	23.61	0.05	0.05	CIRCULAR	42	0.013	0.5	0.5
7	Link-07	13.00	23.61	23.56	0.05	0.38	CIRCULAR	42	0.013	0.5	0.5
8	Link-09	13.26	17.32	17.28	0.04	0.30	Rectangular	90	0.013	0.5	0.5
9	Link-10A	116.10	22.01	21.44	0.57	0.49	CIRCULAR	72	0.013	0.5	0.6
10	Link-10B	12.51	22.20	22.01	0.19	1.52	Rectangular	48	0.013	0.5	0.5
11	Link-11A	33.44	22.73	22.20	0.53	1.58	Rectangular	48	0.013	0.5	0.5
12	Link-11B	37.59	24.10	23.90	0.20	0.53	CIRCULAR	30	0.013	0.5	0.5
13	Link-11C	10.00	24.30	24.20	0.10	1.00	CIRCULAR	30	0.013	0.5	0.6
14	Link-11D	10.00	24.40	24.30	0.10	1.00	CIRCULAR	30	0.013	0.5	0.9
15	Link-11E	15.55	25.07	24.90	0.17	1.09	CIRCULAR	15	0.013	0.5	0.8
16	Link-11F	54.78	25.72	25.17	0.55	1.00	CIRCULAR	15	0.013	0.5	0.8
17	Link-11G	41.17	24.95	24.50	0.45	1.09	CIRCULAR	12	0.013	0.5	0.5
18	Link-11H	65.20	25.70	25.05	0.65	1.00	CIRCULAR	12	0.013	0.5	0.8
19	Link-11I	70.86	24.64	24.50	0.14	0.20	CIRCULAR	30	0.013	0.5	0.5
20	Link-11J	12.15	24.64	24.64	0.00	0.00	Rectangular	72	0.013	0.5	0.5
21	Link-11K	313.25	26.53	25.05	1.48	0.47	CIRCULAR	24	0.013	0.5	0.5
22	Link-12A	13.64	22.93	22.73	0.20	1.47	Rectangular	48	0.013	0.5	0.5
23	Link-12B	24.00	26.30	25.95	0.35	1.46	Rectangular	24	0.013	0.5	0.5
24	Link-13	21.80	23.17	22.93	0.24	1.10	Rectangular	78	0.013	0.5	0.8
25	Link-16	457.66	23.57	23.34	0.23	0.05	CIRCULAR	48	0.025	0.5	0.5
26	Link-17	246.06	23.93	23.57	0.36	0.15	CIRCULAR	48	0.025	0.5	0.5
27	Link-2A	58.83	31.78	29.31	2.47	4.20	CIRCULAR	12	0.013	0.5	0.5
28	Link-2B	60.34	30.67	29.31	1.36	2.25	CIRCULAR	12	0.013	0.5	0.6
29	Link-3A	34.64	27.49	25.69	1.80	5.20	CIRCULAR	12	0.013	0.5	1.0
30	Link-3B	16.31	28.17	26.89	1.28	7.85	CIRCULAR	12	0.013	0.5	0.8
31	Link-3C	48.85	27.67	25.49	2.18	4.46	CIRCULAR	12	0.013	0.5	0.8
32	Link-3D	79.26	28.13	27.67	0.46	0.58	CIRCULAR	12	0.013	0.5	0.8
33	Link-4A	128.18	27.76	25.59	2.17	1.69	CIRCULAR	12	0.013	0.5	0.5
34	Link-5A	21.58	25.62	25.19	0.43	1.99	CIRCULAR	12	0.013	0.5	0.6
35	Link-5B	12.74	26.32	25.82	0.50	3.92	CIRCULAR	12	0.013	0.5	0.8
36	Link-5C	23.38	26.39	25.62	0.77	3.29	CIRCULAR	12	0.013	0.5	0.8
37	Link-5D	24.23	27.17	26.44	0.73	3.01	CIRCULAR	12	0.013	0.5	0.8
38	Link-6A	17.00	26.69	26.30	0.39	2.29	Rectangular	24	0.013	0.5	0.8

Pipe Results

SN	Element ID	Peak Flow (cfs)	Time of Peak Flow Occurrence (days hh:mm)	Design Flow Capacity (cfs)	Peak Flow Velocity (ft/sec)	Travel Time (min)
1	Link-01	43.81	0 00:01	21.75	6.18	0.63
2	Link-02	39.74	0 00:01	84.76	7.92	0.42
3	Link-03	35.69	0 00:02	61.48	6.62	0.68
4	Link-04	35.24	0 12:15	42.70	6.59	0.44
5	Link-05	33.79	0 12:10	142.27	6.88	0.12
6	Link-06	33.78	0 12:10	22.96	4.73	0.34
7	Link-07	33.78	0 12:10	62.40	5.60	0.04
8	Link-09	33.77	0 12:11	986.72	3.68	0.06
9	Link-10A	21.81	0 12:11	296.74	3.05	0.63
10	Link-10B	21.80	0 12:10	449.56	2.31	0.09
11	Link-11A	21.80	0 12:10	459.24	2.61	0.21
12	Link-11B	17.96	0 12:10	29.92	5.35	0.12
13	Link-11C	17.96	0 12:10	41.02	4.49	0.04
14	Link-11D	17.96	0 12:10	41.02	3.87	0.04
15	Link-11E	1.38	0 00:03	6.75	2.05	0.13
16	Link-11F	1.00	0 12:10	6.47	1.04	0.88
17	Link-11G	1.79	0 12:10	3.72	2.28	0.30
18	Link-11H	1.79	0 12:10	3.56	2.28	0.48
19	Link-11I	15.26	0 12:11	18.23	4.07	0.29
20	Link-11J	20.17	0 00:02	59.96	2.68	0.08
21	Link-11K	14.14	0 12:10	15.55	4.53	1.15
22	Link-12A	7.65	0 00:01	441.72	2.24	0.10
23	Link-12B	0.00	0 00:00	34.78	0.00	
24	Link-13	6.22	0 00:01	1857.09	1.26	0.29
25	Link-16	3.89	0 12:07	33.49	1.34	5.69
26	Link-17	4.34	0 00:05	57.14	1.64	2.50
27	Link-2A	0.00	0 00:00	7.30	0.00	
28	Link-2B	0.00	0 00:00	5.35	0.00	
29	Link-3A	0.06	0 00:10	8.12	0.15	3.85
30	Link-3B	0.00	0 00:00	9.98	0.00	
31	Link-3C	0.01	0 12:05	7.53	0.03	27.14
32	Link-3D	0.00	0 00:00	2.71	0.00	
33	Link-4A	0.00	0 00:00	4.64	0.00	
34	Link-5A	0.15	0 00:05	5.03	0.61	0.59
35	Link-5B	0.02	0 12:03	7.06	0.10	2.12
36	Link-5C	0.02	0 12:04	6.47	0.08	4.87
37	Link-5D	0.00	0 00:00	6.18	0.00	
38	Link-6A	0.00	0 00:00	43.63	0.00	

v – Hydraulic Grade Line Design Flow Drainage Profiles

Town Brook Base Flow Recapture Report - Crown Colony Drive/Centre Street Drainage System Profile

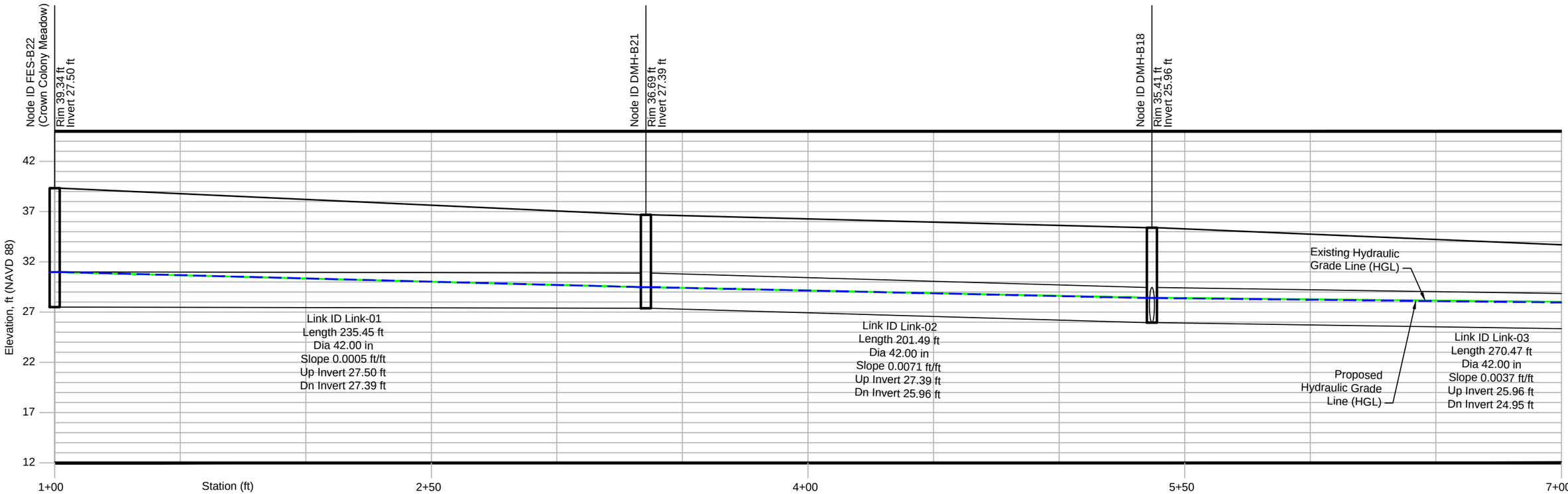

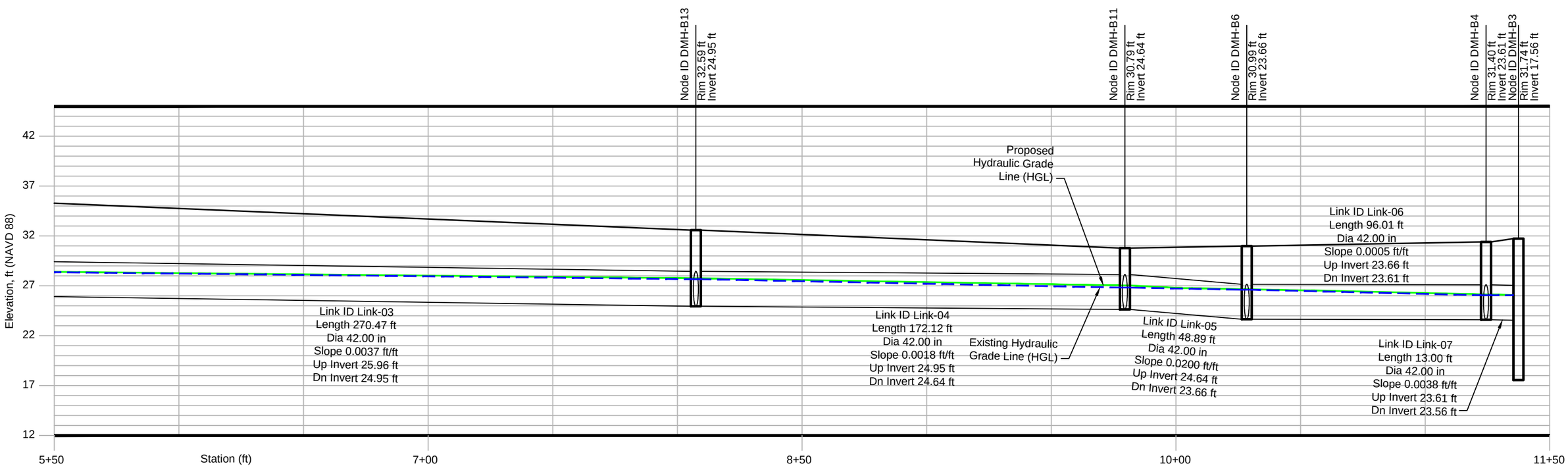

Town Brook Base Flow Recapture Report - Centre Street Drainage System Profile

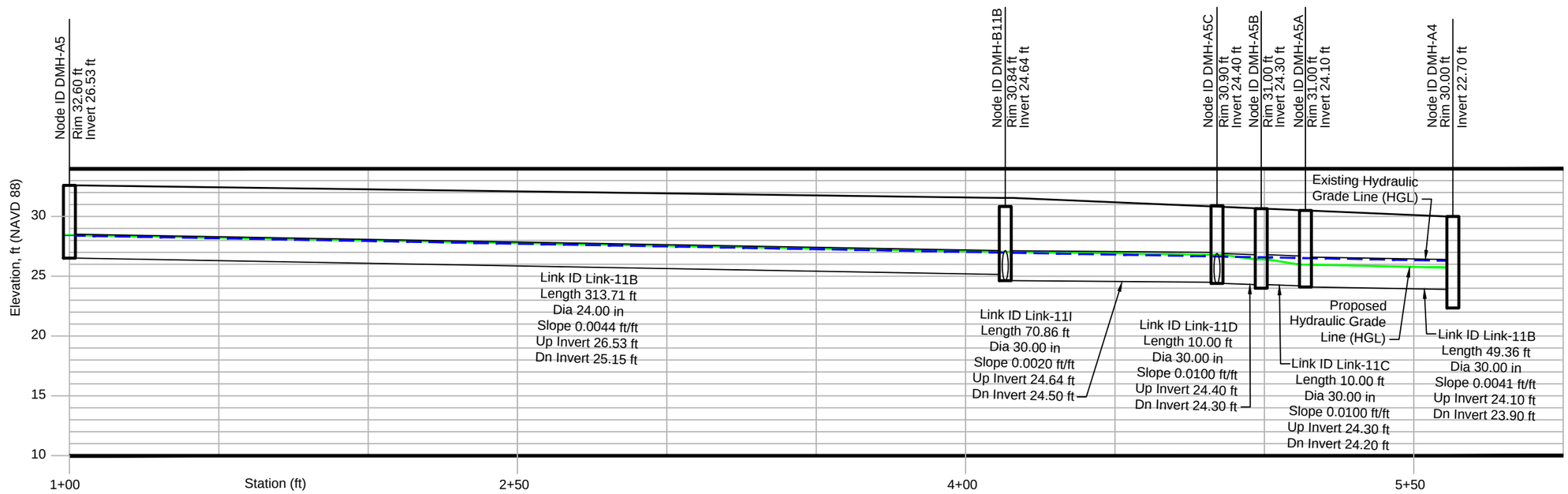

vi – Existing Trough Base Flow Calculation

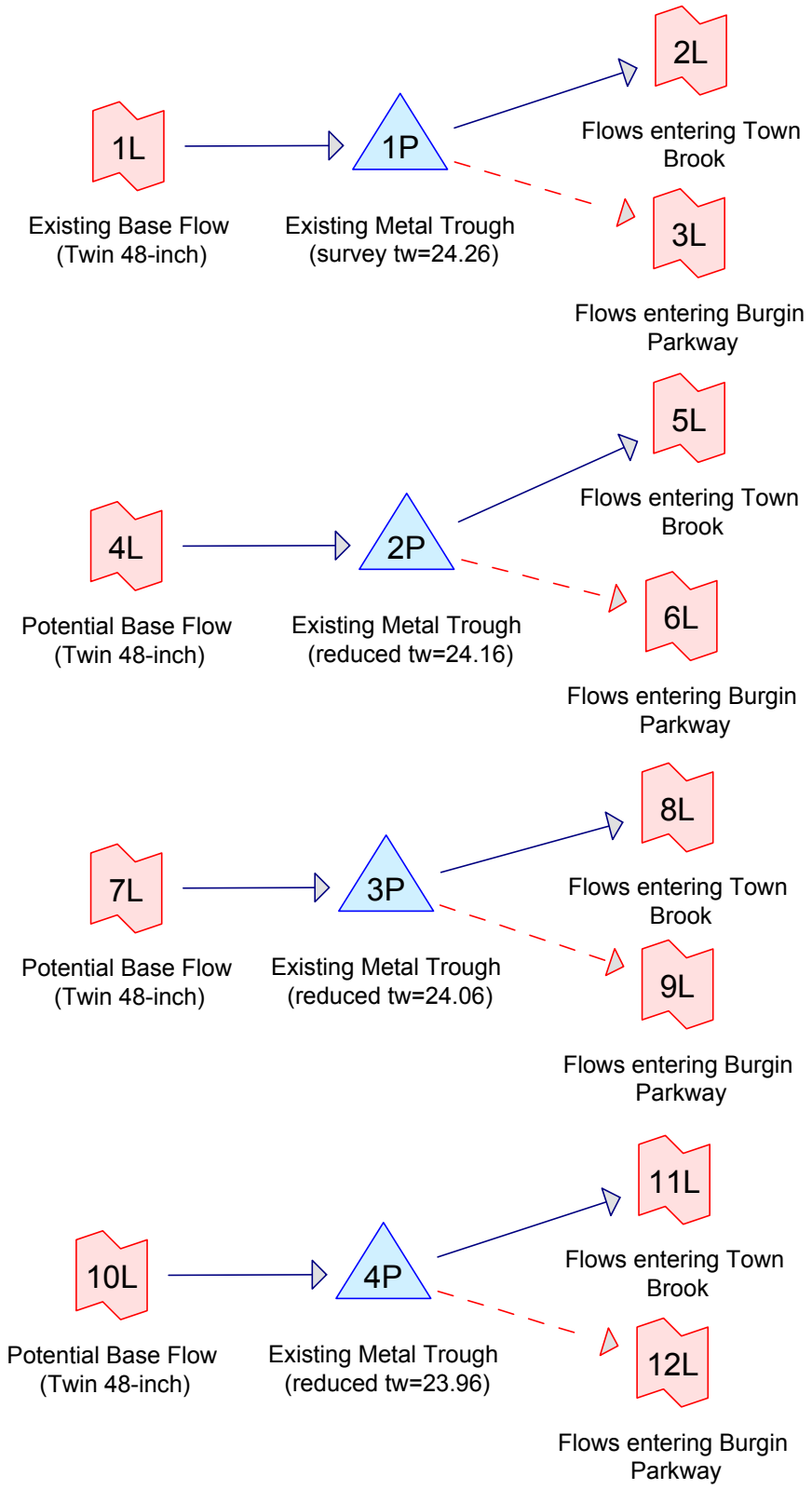

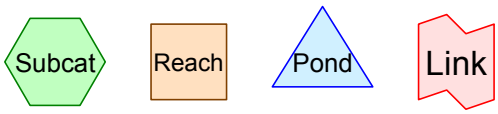

Routing Diagram for 16120008 TB LF Trough
Prepared by EBI Consulting, Printed 1/14/2013
HydroCAD® 10.00 s/n 07251 © 2011 HydroCAD Software Solutions LLC

Summary for Pond 1P: Existing Metal Trough (survey tw=24.26)

Inflow	=	3.80 cfs @	0.00 hrs,	Volume=	7.540 af
Outflow	=	3.80 cfs @	1.22 hrs,	Volume=	7.535 af, Atten= 0%, Lag= 73.2 min
Primary	=	3.80 cfs @	1.22 hrs,	Volume=	7.535 af
Secondary	=	0.00 cfs @	0.00 hrs,	Volume=	0.000 af

Routing by Stor-Ind method, Time Span= 0.00-24.00 hrs, dt= 0.01 hrs / 2
Peak Elev= 24.28' @ 1.04 hrs Surf.Area= 0.001 ac Storage= 0.001 af

Plug-Flow detention time= 1.3 min calculated for 7.534 af (100% of inflow)
Center-of-Mass det. time= 0.6 min (720.6 - 720.0)

Volume	Invert	Avail.Storage	Storage Description
#1	23.28'	0.001 af	**51.0"W x 12.0"H x 14.7'L Pipe Storage S= 0.0075 '/'**

Device	Routing	Invert	Outlet Devices
#1	Secondary	24.28'	**14.7' long Sharp-Crested Rectangular Weir** 2 End Contraction(s)
#2	Secondary	24.28'	**14.7' long Sharp-Crested Rectangular Weir** 2 End Contraction(s)
#3	Primary	23.28'	**4.3' long Sharp-Crested Rectangular Weir** 2 End Contraction(s) 1.0' Crest Height

Primary OutFlow Max=3.81 cfs @ 1.22 hrs HW=24.28' TW=24.26' (Fixed TW Elev= 24.26')
└─**3=Sharp-Crested Rectangular Weir** (Weir Controls 3.81 cfs @ 0.93 fps)

Secondary OutFlow Max=0.00 cfs @ 0.00 hrs HW=23.88' (Free Discharge)
├─**1=Sharp-Crested Rectangular Weir** (Controls 0.00 cfs)
└─**2=Sharp-Crested Rectangular Weir** (Controls 0.00 cfs)

Summary for Pond 2P: Existing Metal Trough (reduced tw=24.16)

Inflow	=	7.60 cfs @	0.00 hrs,	Volume=	15.081 af
Outflow	=	7.60 cfs @	0.45 hrs,	Volume=	15.069 af, Atten= 0%, Lag= 27.0 min
Primary	=	7.60 cfs @	0.45 hrs,	Volume=	15.069 af
Secondary	=	0.00 cfs @	0.00 hrs,	Volume=	0.000 af

Routing by Stor-Ind method, Time Span= 0.00-24.00 hrs, dt= 0.01 hrs / 2
Peak Elev= 24.28' @ 0.41 hrs Surf.Area= 0.001 ac Storage= 0.001 af

Plug-Flow detention time= 1.2 min calculated for 15.068 af (100% of inflow)
Center-of-Mass det. time= 0.5 min (720.5 - 720.0)

Volume	Invert	Avail.Storage	Storage Description
#1	23.28'	0.001 af	**51.0"W x 12.0"H x 14.7'L Pipe Storage S= 0.0075 '/'**

Device	Routing	Invert	Outlet Devices
#1	Secondary	24.28'	**14.7' long Sharp-Crested Rectangular Weir** 2 End Contraction(s)
#2	Secondary	24.28'	**14.7' long Sharp-Crested Rectangular Weir** 2 End Contraction(s)
#3	Primary	23.28'	**4.3' long Sharp-Crested Rectangular Weir** 2 End Contraction(s) 1.0' Crest Height

Primary OutFlow Max=7.60 cfs @ 0.45 hrs HW=24.28' TW=24.16' (Fixed TW Elev= 24.16')
└─**3=Sharp-Crested Rectangular Weir** (Weir Controls 7.60 cfs @ 1.86 fps)

Secondary OutFlow Max=0.00 cfs @ 0.00 hrs HW=24.17' (Free Discharge)
├─**1=Sharp-Crested Rectangular Weir** (Controls 0.00 cfs)
└─**2=Sharp-Crested Rectangular Weir** (Controls 0.00 cfs)

Summary for Pond 3P: Existing Metal Trough (reduced tw=24.06)

Inflow	=	9.50 cfs @	0.00 hrs,	Volume=	18.851 af
Outflow	=	9.50 cfs @	0.35 hrs,	Volume=	18.842 af, Atten= 0%, Lag= 21.0 min
Primary	=	9.50 cfs @	0.35 hrs,	Volume=	18.842 af
Secondary	=	0.00 cfs @	0.00 hrs,	Volume=	0.000 af

Routing by Stor-Ind method, Time Span= 0.00-24.00 hrs, dt= 0.01 hrs / 2
Peak Elev= 24.28' @ 0.32 hrs Surf.Area= 0.001 ac Storage= 0.001 af

Plug-Flow detention time= 0.7 min calculated for 18.833 af (100% of inflow)
Center-of-Mass det. time= 0.3 min (720.3 - 720.0)

Volume	Invert	Avail.Storage	Storage Description
#1	23.28'	0.001 af	**51.0"W x 12.0"H x 14.7'L Pipe Storage S= 0.0075 '/'**

Device	Routing	Invert	Outlet Devices
#1	Secondary	24.28'	**14.7' long Sharp-Crested Rectangular Weir** 2 End Contraction(s)
#2	Secondary	24.28'	**14.7' long Sharp-Crested Rectangular Weir** 2 End Contraction(s)
#3	Primary	23.28'	**4.3' long Sharp-Crested Rectangular Weir** 2 End Contraction(s) 1.0' Crest Height

Primary OutFlow Max=9.50 cfs @ 0.35 hrs HW=24.28' TW=24.06' (Fixed TW Elev= 24.06')
└─**3=Sharp-Crested Rectangular Weir** (Weir Controls 9.50 cfs @ 2.33 fps)

Secondary OutFlow Max=0.00 cfs @ 0.00 hrs HW=24.10' (Free Discharge)
├─**1=Sharp-Crested Rectangular Weir** (Controls 0.00 cfs)
└─**2=Sharp-Crested Rectangular Weir** (Controls 0.00 cfs)

Summary for Pond 4P: Existing Metal Trough (reduced tw=23.96)

Inflow	=	10.90 cfs @	0.00 hrs,	Volume=	21.629 af
Outflow	=	10.90 cfs @	0.33 hrs,	Volume=	21.621 af, Atten= 0%, Lag= 19.8 min
Primary	=	10.90 cfs @	0.33 hrs,	Volume=	21.621 af
Secondary	=	0.00 cfs @	0.00 hrs,	Volume=	0.000 af

Routing by Stor-Ind method, Time Span= 0.00-24.00 hrs, dt= 0.01 hrs / 2
Peak Elev= 24.28' @ 0.31 hrs Surf.Area= 0.001 ac Storage= 0.001 af

Plug-Flow detention time= 0.6 min calculated for 21.620 af (100% of inflow)
Center-of-Mass det. time= 0.3 min (720.3 - 720.0)

Volume	Invert	Avail.Storage	Storage Description
#1	23.28'	0.001 af	**51.0"W x 12.0"H x 14.7'L Pipe Storage S= 0.0075 '/'**

Device	Routing	Invert	Outlet Devices
#1	Secondary	24.28'	**14.7' long Sharp-Crested Rectangular Weir** 2 End Contraction(s)
#2	Secondary	24.28'	**14.7' long Sharp-Crested Rectangular Weir** 2 End Contraction(s)
#3	Primary	23.28'	**4.3' long Sharp-Crested Rectangular Weir** 2 End Contraction(s) 1.0' Crest Height

Primary OutFlow Max=10.90 cfs @ 0.33 hrs HW=24.28' TW=23.96' (Fixed TW Elev= 23.96')
└─**3=Sharp-Crested Rectangular Weir** (Weir Controls 10.90 cfs @ 2.66 fps)

Secondary OutFlow Max=0.00 cfs @ 0.00 hrs HW=24.08' (Free Discharge)
├─**1=Sharp-Crested Rectangular Weir** (Controls 0.00 cfs)
└─**2=Sharp-Crested Rectangular Weir** (Controls 0.00 cfs)

Summary for Link 1L: Existing Base Flow (Twin 48-inch)

Inflow = 3.80 cfs @ 0.00 hrs, Volume= 7.540 af
Primary = 3.80 cfs @ 0.00 hrs, Volume= 7.540 af, Atten= 0%, Lag= 0.0 min

Primary outflow = Inflow, Time Span= 0.00-24.00 hrs, dt= 0.01 hrs

Constant Inflow= 3.80 cfs

Summary for Link 2L: Flows entering Town Brook

Inflow = 3.80 cfs @ 1.22 hrs, Volume= 7.535 af
Primary = 3.80 cfs @ 1.22 hrs, Volume= 7.535 af, Atten= 0%, Lag= 0.0 min

Primary outflow = Inflow, Time Span= 0.00-24.00 hrs, dt= 0.01 hrs

Summary for Link 3L: Flows entering Burgin Parkway

Inflow = 0.00 cfs @ 0.00 hrs, Volume= 0.000 af
Primary = 0.00 cfs @ 0.00 hrs, Volume= 0.000 af, Atten= 0%, Lag= 0.0 min

Primary outflow = Inflow, Time Span= 0.00-24.00 hrs, dt= 0.01 hrs

Summary for Link 4L: Potential Base Flow (Twin 48-inch)

Inflow = 7.60 cfs @ 0.00 hrs, Volume= 15.081 af
Primary = 7.60 cfs @ 0.00 hrs, Volume= 15.081 af, Atten= 0%, Lag= 0.0 min

Primary outflow = Inflow, Time Span= 0.00-24.00 hrs, dt= 0.01 hrs

Constant Inflow= 7.60 cfs

Summary for Link 5L: Flows entering Town Brook

Inflow = 7.60 cfs @ 0.45 hrs, Volume= 15.069 af
Primary = 7.60 cfs @ 0.45 hrs, Volume= 15.069 af, Atten= 0%, Lag= 0.0 min

Primary outflow = Inflow, Time Span= 0.00-24.00 hrs, dt= 0.01 hrs

Summary for Link 6L: Flows entering Burgin Parkway

Inflow = 0.00 cfs @ 0.00 hrs, Volume= 0.000 af
Primary = 0.00 cfs @ 0.00 hrs, Volume= 0.000 af, Atten= 0%, Lag= 0.0 min

Primary outflow = Inflow, Time Span= 0.00-24.00 hrs, dt= 0.01 hrs

Summary for Link 7L: Potential Base Flow (Twin 48-inch)

Inflow = 9.50 cfs @ 0.00 hrs, Volume= 18.851 af
Primary = 9.50 cfs @ 0.00 hrs, Volume= 18.851 af, Atten= 0%, Lag= 0.0 min

Primary outflow = Inflow, Time Span= 0.00-24.00 hrs, dt= 0.01 hrs

Constant Inflow= 9.50 cfs

Summary for Link 8L: Flows entering Town Brook

Inflow = 9.50 cfs @ 0.35 hrs, Volume= 18.842 af
Primary = 9.50 cfs @ 0.35 hrs, Volume= 18.842 af, Atten= 0%, Lag= 0.0 min

Primary outflow = Inflow, Time Span= 0.00-24.00 hrs, dt= 0.01 hrs

Summary for Link 9L: Flows entering Burgin Parkway

Inflow = 0.00 cfs @ 0.00 hrs, Volume= 0.000 af
Primary = 0.00 cfs @ 0.00 hrs, Volume= 0.000 af, Atten= 0%, Lag= 0.0 min

Primary outflow = Inflow, Time Span= 0.00-24.00 hrs, dt= 0.01 hrs

Summary for Link 10L: Potential Base Flow (Twin 48-inch)

Inflow = 10.90 cfs @ 0.00 hrs, Volume= 21.629 af
Primary = 10.90 cfs @ 0.00 hrs, Volume= 21.629 af, Atten= 0%, Lag= 0.0 min

Primary outflow = Inflow, Time Span= 0.00-24.00 hrs, dt= 0.01 hrs

Constant Inflow= 10.90 cfs

Summary for Link 11L: Flows entering Town Brook

Inflow	=	10.90 cfs @	0.33 hrs,	Volume=	21.621 af
Primary	=	10.90 cfs @	0.33 hrs,	Volume=	21.621 af, Atten= 0%, Lag= 0.0 min

Primary outflow = Inflow, Time Span= 0.00-24.00 hrs, dt= 0.01 hrs

Summary for Link 12L: Flows entering Burgin Parkway

Inflow	=	0.00 cfs @	0.00 hrs,	Volume=	0.000 af
Primary	=	0.00 cfs @	0.00 hrs,	Volume=	0.000 af, Atten= 0%, Lag= 0.0 min

Primary outflow = Inflow, Time Span= 0.00-24.00 hrs, dt= 0.01 hrs

Summary of Results

Trough flow (cfs)	Tailwater (ft, NAVD88)*
3.8±	24.26
7.6±	24.16
9.5±	24.06
10.9±	23.96

*Tailwater elevation shown is immediately downstream of trough. Tailwater elevation at the 72-inch RCP outlet varies between 0.2'-0.3' lower. Flow exceeding values presented above can begin to overflow the trough into the Burgin Parkway Culvert.

vii – Crown Colony Stormwater Basin Outlet Control Structures

Crown Colony Stormwater Basin Outlet Control Structures
Existing Conditions

EBI Consulting
environmental | engineering | due diligence

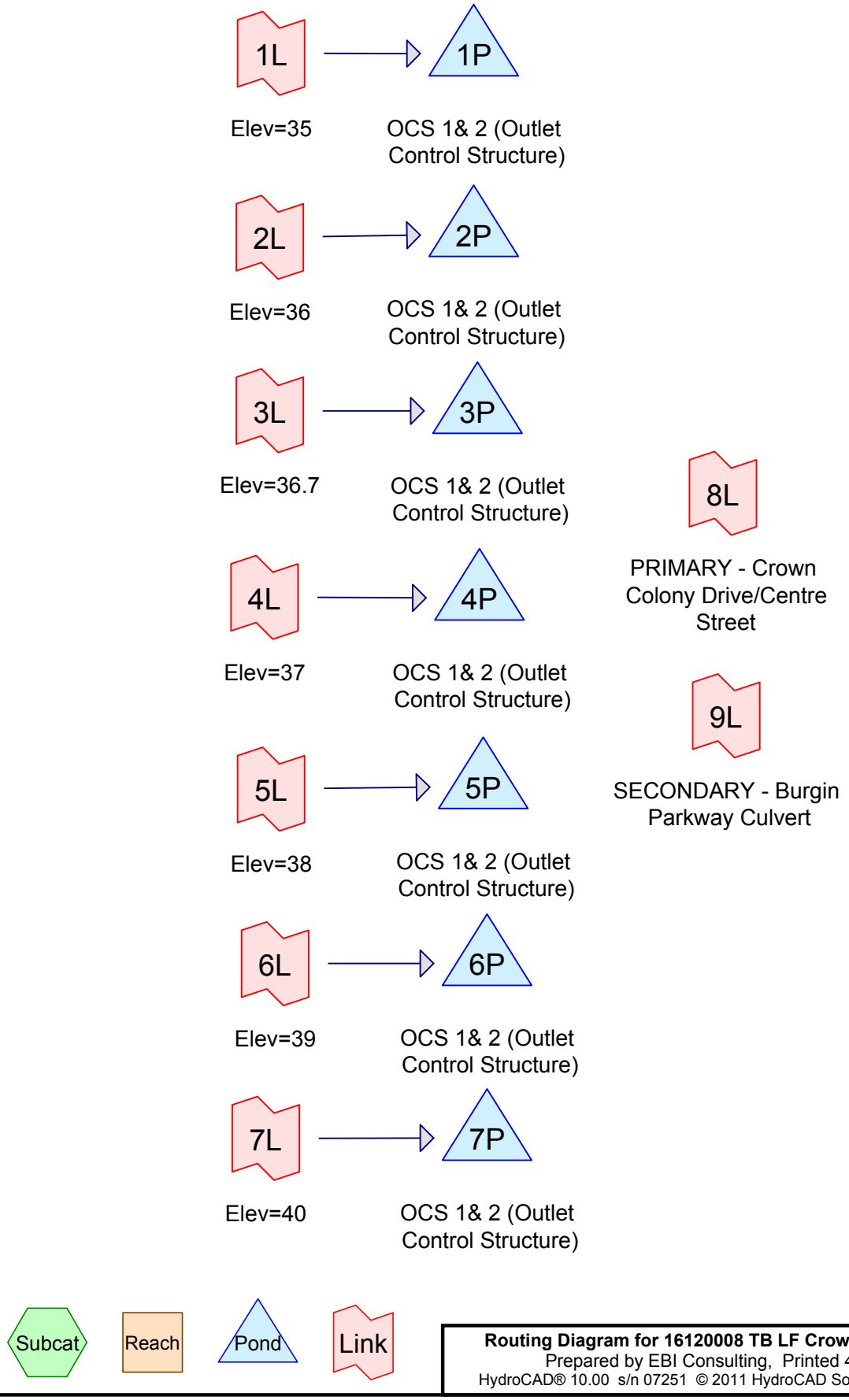

Routing Diagram for 16120008 TB LF Crown Colony OCS EX
Prepared by EBI Consulting, Printed 4/12/2013
HydroCAD® 10.00 s/n 07251 © 2011 HydroCAD Software Solutions LLC

Summary for Pond 1P: OCS 1& 2 (Outlet Control Structure)

Inflow	=	0.70 cfs @	0.00 hrs,	Volume=	1.620 af
Outflow	=	0.70 cfs @	28.00 hrs,	Volume=	1.539 af, Atten= 0%, Lag= 1,680.0 min
Primary	=	0.00 cfs @	28.00 hrs,	Volume=	0.000 af
Secondary	=	0.70 cfs @	28.00 hrs,	Volume=	1.538 af

Routing by Stor-Ind method, Time Span= 0.00-28.00 hrs, dt= 0.01 hrs
Peak Elev= 35.00' @ 28.00 hrs Surf.Area= 41,616 sf Storage= 3,567 cf

Plug-Flow detention time= 81.7 min calculated for 1.538 af (95% of inflow)
Center-of-Mass det. time= 39.0 min (879.0 - 840.0)

Volume	Invert	Avail.Storage	Storage Description
#1	34.75'	466,050 cf	**Custom Stage Data (Irregular)** Listed below (Recalc)

Elevation (feet)	Surf.Area (sq-ft)	Perim. (feet)	Inc.Store (cubic-feet)	Cum.Store (cubic-feet)	Wet.Area (sq-ft)
34.75	17	16.0	0	0	17
35.00	41,610	1,315.0	3,539	3,539	137,604
36.00	51,406	1,366.0	46,422	49,961	148,567
37.00	62,872	1,420.0	57,043	107,004	160,620
42.00	81,134	1,513.0	359,046	466,050	183,531

Device	Routing	Invert	Outlet Devices
#1	Primary	27.50'	**42.0" Round Culvert-OCS2 Outlet Pipe** L= 236.0' RCP, square edge headwall, Ke= 0.500 Inlet / Outlet Invert= 27.50' / 27.39' S= 0.0005 '/' Cc= 0.900 n= 0.013, Flow Area= 9.62 sf
#2	Device 1	34.58'	**24.0" Vert. Orifice/Grate-OCS2 Inlet** C= 0.600
#3	Device 1	39.34'	**60.0" x 60.0" Horiz. Orifice/Grate-OCS2 Overflow** C= 0.600 Limited to weir flow at low heads
#4	Device 2	35.00'	**24.0" Round Culvert-OCS2 FES** L= 5.0' RCP, groove end projecting, Ke= 0.200 Inlet / Outlet Invert= 35.00' / 34.58' S= 0.0840 '/' Cc= 0.900 n= 0.013, Flow Area= 3.14 sf
#5	Secondary	30.16'	**48.0" Round Culvert-OCS1 Outlet Pipe** L= 178.0' RCP, square edge headwall, Ke= 0.500 Inlet / Outlet Invert= 30.16' / 29.38' S= 0.0044 '/' Cc= 0.900 n= 0.013, Flow Area= 12.57 sf
#6	Device 5	33.81'	**24.0" Vert. Orifice/Grate-OCS1 Inlet** C= 0.600
#7	Device 5	39.73'	**60.0" x 60.0" Horiz. Orifice/Grate-OCS1 Overflow** C= 0.600 Limited to weir flow at low heads
#8	Device 6	34.75'	**48.0" Round Culvert-OCS1 FES** L= 8.0' RCP, groove end projecting, Ke= 0.200 Inlet / Outlet Invert= 34.75' / 33.81' S= 0.1175 '/' Cc= 0.900 n= 0.013, Flow Area= 12.57 sf

Primary OutFlow Max=0.00 cfs @ 28.00 hrs HW=35.00' (Free Discharge)
- **1=Culvert-OCS2 Outlet Pipe** (Passes 0.00 cfs of 92.00 cfs potential flow)
  - **2=Orifice/Grate-OCS2 Inlet** (Passes 0.00 cfs of 1.06 cfs potential flow)
    - **4=Culvert-OCS2 FES** (Barrel Controls 0.00 cfs @ 0.16 fps)
  - **3=Orifice/Grate-OCS2 Overflow** (Controls 0.00 cfs)

Secondary OutFlow Max=0.70 cfs @ 28.00 hrs HW=35.00' (Free Discharge)
- **5=Culvert-OCS1 Outlet Pipe** (Passes 0.70 cfs of 91.46 cfs potential flow)
  - **6=Orifice/Grate-OCS1 Inlet** (Passes 0.70 cfs of 7.24 cfs potential flow)
    - **8=Culvert-OCS1 FES** (Inlet Controls 0.70 cfs @ 2.13 fps)
  - **7=Orifice/Grate-OCS1 Overflow** (Controls 0.00 cfs)

Summary for Pond 2P: OCS 1& 2 (Outlet Control Structure)

Inflow	=	22.30 cfs @	0.00 hrs,	Volume=	51.622 af
Outflow	=	22.30 cfs @	17.13 hrs,	Volume=	50.471 af, Atten= 0%, Lag= 1,027.8 min
Primary	=	6.28 cfs @	17.13 hrs,	Volume=	14.188 af
Secondary	=	16.02 cfs @	17.13 hrs,	Volume=	36.283 af

Routing by Stor-Ind method, Time Span= 0.00-28.00 hrs, dt= 0.01 hrs
Peak Elev= 36.00' @ 17.01 hrs Surf.Area= 51,444 sf Storage= 50,140 cf

Plug-Flow detention time= 37.5 min calculated for 50.462 af (98% of inflow)
Center-of-Mass det. time= 18.5 min (858.5 - 840.0)

Volume	Invert	Avail.Storage	Storage Description
#1	34.75'	466,050 cf	**Custom Stage Data (Irregular)** Listed below (Recalc)

Elevation (feet)	Surf.Area (sq-ft)	Perim. (feet)	Inc.Store (cubic-feet)	Cum.Store (cubic-feet)	Wet.Area (sq-ft)
34.75	17	16.0	0	0	17
35.00	41,610	1,315.0	3,539	3,539	137,604
36.00	51,406	1,366.0	46,422	49,961	148,567
37.00	62,872	1,420.0	57,043	107,004	160,620
42.00	81,134	1,513.0	359,046	466,050	183,531

Device	Routing	Invert	Outlet Devices
#1	Primary	27.50'	**42.0" Round Culvert-OCS2 Outlet Pipe** L= 236.0' RCP, square edge headwall, Ke= 0.500 Inlet / Outlet Invert= 27.50' / 27.39' S= 0.0005 '/' Cc= 0.900 n= 0.013, Flow Area= 9.62 sf
#2	Device 1	34.58'	**24.0" Vert. Orifice/Grate-OCS2 Inlet** C= 0.600
#3	Device 1	39.34'	**60.0" x 60.0" Horiz. Orifice/Grate-OCS2 Overflow** C= 0.600 Limited to weir flow at low heads
#4	Device 2	35.00'	**24.0" Round Culvert-OCS2 FES** L= 5.0' RCP, groove end projecting, Ke= 0.200 Inlet / Outlet Invert= 35.00' / 34.58' S= 0.0840 '/' Cc= 0.900 n= 0.013, Flow Area= 3.14 sf
#5	Secondary	30.16'	**48.0" Round Culvert-OCS1 Outlet Pipe** L= 178.0' RCP, square edge headwall, Ke= 0.500

			Inlet / Outlet Invert= 30.16' / 29.38' S= 0.0044 '/' Cc= 0.900
			n= 0.013, Flow Area= 12.57 sf
#6	Device 5	33.81'	**24.0" Vert. Orifice/Grate-OCS1 Inlet** C= 0.600
#7	Device 5	39.73'	**60.0" x 60.0" Horiz. Orifice/Grate-OCS1 Overflow** C= 0.600
			Limited to weir flow at low heads
#8	Device 6	34.75'	**48.0" Round Culvert-OCS1 FES**
			L= 8.0' RCP, groove end projecting, Ke= 0.200
			Inlet / Outlet Invert= 34.75' / 33.81' S= 0.1175 '/' Cc= 0.900
			n= 0.013, Flow Area= 12.57 sf

Primary OutFlow Max=6.28 cfs @ 17.13 hrs HW=36.00' (Free Discharge)
- **1=Culvert-OCS2 Outlet Pipe** (Passes 6.28 cfs of 102.61 cfs potential flow)
  - **2=Orifice/Grate-OCS2 Inlet** (Passes 6.28 cfs of 9.72 cfs potential flow)
    - **4=Culvert-OCS2 FES** (Barrel Controls 6.28 cfs @ 5.81 fps)
  - **3=Orifice/Grate-OCS2 Overflow** (Controls 0.00 cfs)

Secondary OutFlow Max=16.05 cfs @ 17.13 hrs HW=36.00' (Free Discharge)
- **5=Culvert-OCS1 Outlet Pipe** (Passes 16.05 cfs of 105.86 cfs potential flow)
  - **6=Orifice/Grate-OCS1 Inlet** (Passes 16.05 cfs of 16.53 cfs potential flow)
    - **8=Culvert-OCS1 FES** (Inlet Controls 16.05 cfs @ 4.76 fps)
  - **7=Orifice/Grate-OCS1 Overflow** (Controls 0.00 cfs)

Summary for Pond 3P: OCS 1& 2 (Outlet Control Structure)

Inflow	=	34.70 cfs @	0.00 hrs,	Volume=	80.326 af
Outflow	=	34.70 cfs @	28.00 hrs,	Volume=	78.293 af, Atten= 0%, Lag= 1,680.0 min
Primary	=	13.91 cfs @	28.00 hrs,	Volume=	31.090 af
Secondary	=	20.79 cfs @	28.00 hrs,	Volume=	47.202 af

Routing by Stor-Ind method, Time Span= 0.00-28.00 hrs, dt= 0.01 hrs
Peak Elev= 36.70' @ 28.00 hrs Surf.Area= 59,290 sf Storage= 88,574 cf

Plug-Flow detention time= 42.2 min calculated for 78.251 af (97% of inflow)
Center-of-Mass det. time= 20.6 min (860.6 - 840.0)

Volume	Invert	Avail.Storage	Storage Description
#1	34.75'	466,050 cf	**Custom Stage Data (Irregular)** Listed below (Recalc)

Elevation (feet)	Surf.Area (sq-ft)	Perim. (feet)	Inc.Store (cubic-feet)	Cum.Store (cubic-feet)	Wet.Area (sq-ft)
34.75	17	16.0	0	0	17
35.00	41,610	1,315.0	3,539	3,539	137,604
36.00	51,406	1,366.0	46,422	49,961	148,567
37.00	62,872	1,420.0	57,043	107,004	160,620
42.00	81,134	1,513.0	359,046	466,050	183,531

Device	Routing	Invert	Outlet Devices
#1	Primary	27.50'	**42.0" Round Culvert-OCS2 Outlet Pipe** L= 236.0' RCP, square edge headwall, Ke= 0.500 Inlet / Outlet Invert= 27.50' / 27.39' S= 0.0005 '/' Cc= 0.900 n= 0.013, Flow Area= 9.62 sf
#2	Device 1	34.58'	**24.0" Vert. Orifice/Grate-OCS2 Inlet** C= 0.600
#3	Device 1	39.34'	**60.0" x 60.0" Horiz. Orifice/Grate-OCS2 Overflow** C= 0.600 Limited to weir flow at low heads
#4	Device 2	35.00'	**24.0" Round Culvert-OCS2 FES** L= 5.0' RCP, groove end projecting, Ke= 0.200 Inlet / Outlet Invert= 35.00' / 34.58' S= 0.0840 '/' Cc= 0.900 n= 0.013, Flow Area= 3.14 sf
#5	Secondary	30.16'	**48.0" Round Culvert-OCS1 Outlet Pipe** L= 178.0' RCP, square edge headwall, Ke= 0.500 Inlet / Outlet Invert= 30.16' / 29.38' S= 0.0044 '/' Cc= 0.900 n= 0.013, Flow Area= 12.57 sf
#6	Device 5	33.81'	**24.0" Vert. Orifice/Grate-OCS1 Inlet** C= 0.600
#7	Device 5	39.73'	**60.0" x 60.0" Horiz. Orifice/Grate-OCS1 Overflow** C= 0.600 Limited to weir flow at low heads
#8	Device 6	34.75'	**48.0" Round Culvert-OCS1 FES** L= 8.0' RCP, groove end projecting, Ke= 0.200 Inlet / Outlet Invert= 34.75' / 33.81' S= 0.1175 '/' Cc= 0.900 n= 0.013, Flow Area= 12.57 sf

Primary OutFlow Max=13.91 cfs @ 28.00 hrs HW=36.70' (Free Discharge)
- **1=Culvert-OCS2 Outlet Pipe** (Passes 13.91 cfs of 109.36 cfs potential flow)
  - **2=Orifice/Grate-OCS2 Inlet** (Passes 13.91 cfs of 16.00 cfs potential flow)
    - **4=Culvert-OCS2 FES** (Barrel Controls 13.91 cfs @ 6.59 fps)
  - **3=Orifice/Grate-OCS2 Overflow** (Controls 0.00 cfs)

Secondary OutFlow Max=20.79 cfs @ 28.00 hrs HW=36.70' (Free Discharge)
- **5=Culvert-OCS1 Outlet Pipe** (Passes 20.79 cfs of 119.06 cfs potential flow)
  - **6=Orifice/Grate-OCS1 Inlet** (Orifice Controls 20.79 cfs @ 6.62 fps)
    - **8=Culvert-OCS1 FES** (Passes 20.79 cfs of 35.57 cfs potential flow)
  - **7=Orifice/Grate-OCS1 Overflow** (Controls 0.00 cfs)

Summary for Pond 4P: OCS 1& 2 (Outlet Control Structure)

Inflow	=	39.80 cfs @	0.00 hrs,	Volume=	92.132 af
Outflow	=	39.80 cfs @	28.00 hrs,	Volume=	89.675 af, Atten= 0%, Lag= 1,680.0 min
Primary	=	17.41 cfs @	28.00 hrs,	Volume=	38.848 af
Secondary	=	22.39 cfs @	28.00 hrs,	Volume=	50.827 af

Routing by Stor-Ind method, Time Span= 0.00-28.00 hrs, dt= 0.01 hrs
Peak Elev= 37.00' @ 28.00 hrs Surf.Area= 62,873 sf Storage= 107,018 cf

Plug-Flow detention time= 44.3 min calculated for 89.627 af (97% of inflow)
Center-of-Mass det. time= 21.6 min (861.6 - 840.0)

Volume	Invert	Avail.Storage	Storage Description
#1	34.75'	466,050 cf	**Custom Stage Data (Irregular)** Listed below (Recalc)

Elevation (feet)	Surf.Area (sq-ft)	Perim. (feet)	Inc.Store (cubic-feet)	Cum.Store (cubic-feet)	Wet.Area (sq-ft)
34.75	17	16.0	0	0	17
35.00	41,610	1,315.0	3,539	3,539	137,604
36.00	51,406	1,366.0	46,422	49,961	148,567
37.00	62,872	1,420.0	57,043	107,004	160,620
42.00	81,134	1,513.0	359,046	466,050	183,531

Device	Routing	Invert	Outlet Devices
#1	Primary	27.50'	**42.0" Round Culvert-OCS2 Outlet Pipe** L= 236.0' RCP, square edge headwall, Ke= 0.500 Inlet / Outlet Invert= 27.50' / 27.39' S= 0.0005 '/' Cc= 0.900 n= 0.013, Flow Area= 9.62 sf
#2	Device 1	34.58'	**24.0" Vert. Orifice/Grate-OCS2 Inlet** C= 0.600
#3	Device 1	39.34'	**60.0" x 60.0" Horiz. Orifice/Grate-OCS2 Overflow** C= 0.600 Limited to weir flow at low heads
#4	Device 2	35.00'	**24.0" Round Culvert-OCS2 FES** L= 5.0' RCP, groove end projecting, Ke= 0.200 Inlet / Outlet Invert= 35.00' / 34.58' S= 0.0840 '/' Cc= 0.900 n= 0.013, Flow Area= 3.14 sf
#5	Secondary	30.16'	**48.0" Round Culvert-OCS1 Outlet Pipe** L= 178.0' RCP, square edge headwall, Ke= 0.500 Inlet / Outlet Invert= 30.16' / 29.38' S= 0.0044 '/' Cc= 0.900 n= 0.013, Flow Area= 12.57 sf
#6	Device 5	33.81'	**24.0" Vert. Orifice/Grate-OCS1 Inlet** C= 0.600
#7	Device 5	39.73'	**60.0" x 60.0" Horiz. Orifice/Grate-OCS1 Overflow** C= 0.600 Limited to weir flow at low heads
#8	Device 6	34.75'	**48.0" Round Culvert-OCS1 FES** L= 8.0' RCP, groove end projecting, Ke= 0.200 Inlet / Outlet Invert= 34.75' / 33.81' S= 0.1175 '/' Cc= 0.900 n= 0.013, Flow Area= 12.57 sf

Primary OutFlow Max=17.41 cfs @ 28.00 hrs HW=37.00' (Free Discharge)
- **1=Culvert-OCS2 Outlet Pipe** (Passes 17.41 cfs of 112.17 cfs potential flow)
  - **2=Orifice/Grate-OCS2 Inlet** (Passes 17.41 cfs of 18.03 cfs potential flow)
    - **4=Culvert-OCS2 FES** (Barrel Controls 17.41 cfs @ 6.89 fps)
  - **3=Orifice/Grate-OCS2 Overflow** (Controls 0.00 cfs)

Secondary OutFlow Max=22.39 cfs @ 28.00 hrs HW=37.00' (Free Discharge)
- **5=Culvert-OCS1 Outlet Pipe** (Passes 22.39 cfs of 124.36 cfs potential flow)
  - **6=Orifice/Grate-OCS1 Inlet** (Orifice Controls 22.39 cfs @ 7.13 fps)
    - **8=Culvert-OCS1 FES** (Passes 22.39 cfs of 44.40 cfs potential flow)
  - **7=Orifice/Grate-OCS1 Overflow** (Controls 0.00 cfs)

Summary for Pond 5P: OCS 1& 2 (Outlet Control Structure)

Inflow	=	50.50 cfs @	0.00 hrs,	Volume=	116.901 af
Outflow	=	50.50 cfs @	28.00 hrs,	Volume=	112.970 af, Atten= 0%, Lag= 1,680.0 min
Primary	=	23.51 cfs @	28.00 hrs,	Volume=	52.224 af
Secondary	=	26.99 cfs @	28.00 hrs,	Volume=	60.746 af

Routing by Stor-Ind method, Time Span= 0.00-28.00 hrs, dt= 0.01 hrs
Peak Elev= 37.99' @ 28.00 hrs Surf.Area= 66,320 sf Storage= 171,252 cf

Plug-Flow detention time= 54.8 min calculated for 112.909 af (97% of inflow)
Center-of-Mass det. time= 26.2 min (866.2 - 840.0)

Volume	Invert	Avail.Storage	Storage Description
#1	34.75'	466,050 cf	**Custom Stage Data (Irregular)** Listed below (Recalc)

Elevation (feet)	Surf.Area (sq-ft)	Perim. (feet)	Inc.Store (cubic-feet)	Cum.Store (cubic-feet)	Wet.Area (sq-ft)
34.75	17	16.0	0	0	17
35.00	41,610	1,315.0	3,539	3,539	137,604
36.00	51,406	1,366.0	46,422	49,961	148,567
37.00	62,872	1,420.0	57,043	107,004	160,620
42.00	81,134	1,513.0	359,046	466,050	183,531

Device	Routing	Invert	Outlet Devices
#1	Primary	27.50'	**42.0" Round Culvert-OCS2 Outlet Pipe** L= 236.0' RCP, square edge headwall, Ke= 0.500 Inlet / Outlet Invert= 27.50' / 27.39' S= 0.0005 '/' Cc= 0.900 n= 0.013, Flow Area= 9.62 sf
#2	Device 1	34.58'	**24.0" Vert. Orifice/Grate-OCS2 Inlet** C= 0.600
#3	Device 1	39.34'	**60.0" x 60.0" Horiz. Orifice/Grate-OCS2 Overflow** C= 0.600 Limited to weir flow at low heads
#4	Device 2	35.00'	**24.0" Round Culvert-OCS2 FES** L= 5.0' RCP, groove end projecting, Ke= 0.200 Inlet / Outlet Invert= 35.00' / 34.58' S= 0.0840 '/' Cc= 0.900 n= 0.013, Flow Area= 3.14 sf
#5	Secondary	30.16'	**48.0" Round Culvert-OCS1 Outlet Pipe** L= 178.0' RCP, square edge headwall, Ke= 0.500 Inlet / Outlet Invert= 30.16' / 29.38' S= 0.0044 '/' Cc= 0.900 n= 0.013, Flow Area= 12.57 sf
#6	Device 5	33.81'	**24.0" Vert. Orifice/Grate-OCS1 Inlet** C= 0.600
#7	Device 5	39.73'	**60.0" x 60.0" Horiz. Orifice/Grate-OCS1 Overflow** C= 0.600 Limited to weir flow at low heads
#8	Device 6	34.75'	**48.0" Round Culvert-OCS1 FES** L= 8.0' RCP, groove end projecting, Ke= 0.200 Inlet / Outlet Invert= 34.75' / 33.81' S= 0.1175 '/' Cc= 0.900 n= 0.013, Flow Area= 12.57 sf

Primary OutFlow Max=23.51 cfs @ 28.00 hrs HW=37.99' (Free Discharge)
- **1=Culvert-OCS2 Outlet Pipe** (Passes 23.51 cfs of 120.95 cfs potential flow)
  - **2=Orifice/Grate-OCS2 Inlet** (Orifice Controls 23.51 cfs @ 7.48 fps)
    - **4=Culvert-OCS2 FES** (Passes 23.51 cfs of 26.69 cfs potential flow)
  - **3=Orifice/Grate-OCS2 Overflow** (Controls 0.00 cfs)

Secondary OutFlow Max=26.99 cfs @ 28.00 hrs HW=37.99' (Free Discharge)
- **5=Culvert-OCS1 Outlet Pipe** (Passes 26.99 cfs of 140.41 cfs potential flow)
  - **6=Orifice/Grate-OCS1 Inlet** (Orifice Controls 26.99 cfs @ 8.59 fps)
    - **8=Culvert-OCS1 FES** (Passes 26.99 cfs of 76.51 cfs potential flow)
  - **7=Orifice/Grate-OCS1 Overflow** (Controls 0.00 cfs)

Summary for Pond 6P: OCS 1& 2 (Outlet Control Structure)

Inflow	=	58.90 cfs @	0.00 hrs,	Volume=	136.346 af
Outflow	=	58.90 cfs @	28.00 hrs,	Volume=	130.851 af, Atten= 0%, Lag= 1,680.0 min
Primary	=	27.95 cfs @	28.00 hrs,	Volume=	61.738 af
Secondary	=	30.95 cfs @	28.00 hrs,	Volume=	69.113 af

Routing by Stor-Ind method, Time Span= 0.00-28.00 hrs, dt= 0.01 hrs
Peak Elev= 39.00' @ 28.00 hrs Surf.Area= 69,881 sf Storage= 239,377 cf

Plug-Flow detention time= 64.7 min calculated for 130.780 af (96% of inflow)
Center-of-Mass det. time= 30.5 min (870.5 - 840.0)

Volume	Invert	Avail.Storage	Storage Description
#1	34.75'	466,050 cf	**Custom Stage Data (Irregular)** Listed below (Recalc)

Elevation (feet)	Surf.Area (sq-ft)	Perim. (feet)	Inc.Store (cubic-feet)	Cum.Store (cubic-feet)	Wet.Area (sq-ft)
34.75	17	16.0	0	0	17
35.00	41,610	1,315.0	3,539	3,539	137,604
36.00	51,406	1,366.0	46,422	49,961	148,567
37.00	62,872	1,420.0	57,043	107,004	160,620
42.00	81,134	1,513.0	359,046	466,050	183,531

Device	Routing	Invert	Outlet Devices
#1	Primary	27.50'	**42.0" Round Culvert-OCS2 Outlet Pipe** L= 236.0' RCP, square edge headwall, Ke= 0.500 Inlet / Outlet Invert= 27.50' / 27.39' S= 0.0005 '/' Cc= 0.900 n= 0.013, Flow Area= 9.62 sf
#2	Device 1	34.58'	**24.0" Vert. Orifice/Grate-OCS2 Inlet** C= 0.600
#3	Device 1	39.34'	**60.0" x 60.0" Horiz. Orifice/Grate-OCS2 Overflow** C= 0.600 Limited to weir flow at low heads
#4	Device 2	35.00'	**24.0" Round Culvert-OCS2 FES** L= 5.0' RCP, groove end projecting, Ke= 0.200 Inlet / Outlet Invert= 35.00' / 34.58' S= 0.0840 '/' Cc= 0.900 n= 0.013, Flow Area= 3.14 sf
#5	Secondary	30.16'	**48.0" Round Culvert-OCS1 Outlet Pipe** L= 178.0' RCP, square edge headwall, Ke= 0.500

			Inlet / Outlet Invert= 30.16' / 29.38' S= 0.0044 '/' Cc= 0.900
			n= 0.013, Flow Area= 12.57 sf
#6	Device 5	33.81'	**24.0" Vert. Orifice/Grate-OCS1 Inlet** C= 0.600
#7	Device 5	39.73'	**60.0" x 60.0" Horiz. Orifice/Grate-OCS1 Overflow** C= 0.600
			Limited to weir flow at low heads
#8	Device 6	34.75'	**48.0" Round Culvert-OCS1 FES**
			L= 8.0' RCP, groove end projecting, Ke= 0.200
			Inlet / Outlet Invert= 34.75' / 33.81' S= 0.1175 '/' Cc= 0.900
			n= 0.013, Flow Area= 12.57 sf

Primary OutFlow Max=27.95 cfs @ 28.00 hrs HW=39.00' (Free Discharge)
- **1=Culvert-OCS2 Outlet Pipe** (Passes 27.95 cfs of 129.19 cfs potential flow)
  - **2=Orifice/Grate-OCS2 Inlet** (Orifice Controls 27.95 cfs @ 8.90 fps)
    - **4=Culvert-OCS2 FES** (Passes 27.95 cfs of 32.72 cfs potential flow)
  - **3=Orifice/Grate-OCS2 Overflow** (Controls 0.00 cfs)

Secondary OutFlow Max=30.95 cfs @ 28.00 hrs HW=39.00' (Free Discharge)
- **5=Culvert-OCS1 Outlet Pipe** (Passes 30.95 cfs of 154.88 cfs potential flow)
  - **6=Orifice/Grate-OCS1 Inlet** (Orifice Controls 30.95 cfs @ 9.85 fps)
    - **8=Culvert-OCS1 FES** (Passes 30.95 cfs of 109.77 cfs potential flow)
  - **7=Orifice/Grate-OCS1 Overflow** (Controls 0.00 cfs)

Summary for Pond 7P: OCS 1& 2 (Outlet Control Structure)

Inflow	=	110.00 cfs @	0.00 hrs, Volume=	254.636 af	
Outflow	=	110.00 cfs @	5.88 hrs, Volume=	247.494 af,	Atten= 0%, Lag= 352.8 min
Primary	=	66.54 cfs @	5.88 hrs, Volume=	149.013 af	
Secondary	=	43.46 cfs @	5.88 hrs, Volume=	98.481 af	

Routing by Stor-Ind method, Time Span= 0.00-28.00 hrs, dt= 0.01 hrs
Peak Elev= 40.00' @ 5.81 hrs Surf.Area= 73,534 sf Storage= 311,108 cf

Plug-Flow detention time= 47.1 min calculated for 247.449 af (97% of inflow)
Center-of-Mass det. time= 23.2 min (863.2 - 840.0)

Volume	Invert	Avail.Storage	Storage Description
#1	34.75'	466,050 cf	**Custom Stage Data (Irregular)** Listed below (Recalc)

Elevation (feet)	Surf.Area (sq-ft)	Perim. (feet)	Inc.Store (cubic-feet)	Cum.Store (cubic-feet)	Wet.Area (sq-ft)
34.75	17	16.0	0	0	17
35.00	41,610	1,315.0	3,539	3,539	137,604
36.00	51,406	1,366.0	46,422	49,961	148,567
37.00	62,872	1,420.0	57,043	107,004	160,620
42.00	81,134	1,513.0	359,046	466,050	183,531

Device	Routing	Invert	Outlet Devices
#1	Primary	27.50'	**42.0" Round Culvert-OCS2 Outlet Pipe** L= 236.0' RCP, square edge headwall, Ke= 0.500 Inlet / Outlet Invert= 27.50' / 27.39' S= 0.0005 '/' Cc= 0.900 n= 0.013, Flow Area= 9.62 sf
#2	Device 1	34.58'	**24.0" Vert. Orifice/Grate-OCS2 Inlet** C= 0.600
#3	Device 1	39.34'	**60.0" x 60.0" Horiz. Orifice/Grate-OCS2 Overflow** C= 0.600 Limited to weir flow at low heads
#4	Device 2	35.00'	**24.0" Round Culvert-OCS2 FES** L= 5.0' RCP, groove end projecting, Ke= 0.200 Inlet / Outlet Invert= 35.00' / 34.58' S= 0.0840 '/' Cc= 0.900 n= 0.013, Flow Area= 3.14 sf
#5	Secondary	30.16'	**48.0" Round Culvert-OCS1 Outlet Pipe** L= 178.0' RCP, square edge headwall, Ke= 0.500 Inlet / Outlet Invert= 30.16' / 29.38' S= 0.0044 '/' Cc= 0.900 n= 0.013, Flow Area= 12.57 sf
#6	Device 5	33.81'	**24.0" Vert. Orifice/Grate-OCS1 Inlet** C= 0.600
#7	Device 5	39.73'	**60.0" x 60.0" Horiz. Orifice/Grate-OCS1 Overflow** C= 0.600 Limited to weir flow at low heads
#8	Device 6	34.75'	**48.0" Round Culvert-OCS1 FES** L= 8.0' RCP, groove end projecting, Ke= 0.200 Inlet / Outlet Invert= 34.75' / 33.81' S= 0.1175 '/' Cc= 0.900 n= 0.013, Flow Area= 12.57 sf

Primary OutFlow Max=66.51 cfs @ 5.88 hrs HW=40.00' (Free Discharge)
- **1=Culvert-OCS2 Outlet Pipe** (Passes 66.51 cfs of 136.93 cfs potential flow)
  - **2=Orifice/Grate-OCS2 Inlet** (Orifice Controls 31.79 cfs @ 10.12 fps)
    - **4=Culvert-OCS2 FES** (Passes 31.79 cfs of 37.80 cfs potential flow)
  - **3=Orifice/Grate-OCS2 Overflow** (Weir Controls 34.72 cfs @ 2.65 fps)

Secondary OutFlow Max=43.40 cfs @ 5.88 hrs HW=40.00' (Free Discharge)
- **5=Culvert-OCS1 Outlet Pipe** (Passes 43.40 cfs of 168.11 cfs potential flow)
  - **6=Orifice/Grate-OCS1 Inlet** (Orifice Controls 34.45 cfs @ 10.96 fps)
    - **8=Culvert-OCS1 FES** (Passes 34.45 cfs of 135.65 cfs potential flow)
  - **7=Orifice/Grate-OCS1 Overflow** (Weir Controls 8.95 cfs @ 1.69 fps)

Summary for Link 1L: Elev=35

Inflow	=	0.70 cfs @	0.00 hrs, Volume=	1.620 af	
Primary	=	0.70 cfs @	0.00 hrs, Volume=	1.620 af,	Atten= 0%, Lag= 0.0 min

Primary outflow = Inflow, Time Span= 0.00-28.00 hrs, dt= 0.01 hrs

Constant Inflow= 0.70 cfs

Summary for Link 2L: Elev=36

Inflow	=	22.30 cfs @	0.00 hrs, Volume=	51.622 af	
Primary	=	22.30 cfs @	0.00 hrs, Volume=	51.622 af,	Atten= 0%, Lag= 0.0 min

Primary outflow = Inflow, Time Span= 0.00-28.00 hrs, dt= 0.01 hrs

Constant Inflow= 22.30 cfs

Summary for Link 3L: Elev=36.7

Inflow	=	34.70 cfs @	0.00 hrs,	Volume=	80.326 af
Primary	=	34.70 cfs @	0.00 hrs,	Volume=	80.326 af, Atten= 0%, Lag= 0.0 min

Primary outflow = Inflow, Time Span= 0.00-28.00 hrs, dt= 0.01 hrs

Constant Inflow= 34.70 cfs

Summary for Link 4L: Elev=37

Inflow	=	39.80 cfs @	0.00 hrs,	Volume=	92.132 af
Primary	=	39.80 cfs @	0.00 hrs,	Volume=	92.132 af, Atten= 0%, Lag= 0.0 min

Primary outflow = Inflow, Time Span= 0.00-28.00 hrs, dt= 0.01 hrs

Constant Inflow= 39.80 cfs

Summary for Link 5L: Elev=38

Inflow	=	50.50 cfs @	0.00 hrs,	Volume=	116.901 af
Primary	=	50.50 cfs @	0.00 hrs,	Volume=	116.901 af, Atten= 0%, Lag= 0.0 min

Primary outflow = Inflow, Time Span= 0.00-28.00 hrs, dt= 0.01 hrs

Constant Inflow= 50.50 cfs

Summary for Link 6L: Elev=39

Inflow	=	58.90 cfs @	0.00 hrs,	Volume=	136.346 af
Primary	=	58.90 cfs @	0.00 hrs,	Volume=	136.346 af, Atten= 0%, Lag= 0.0 min

Primary outflow = Inflow, Time Span= 0.00-28.00 hrs, dt= 0.01 hrs

Constant Inflow= 58.90 cfs

Summary for Link 7L: Elev=40

Inflow	=	110.00 cfs @	0.00 hrs,	Volume=	254.636 af
Primary	=	110.00 cfs @	0.00 hrs,	Volume=	254.636 af, Atten= 0%, Lag= 0.0 min

Primary outflow = Inflow, Time Span= 0.00-28.00 hrs, dt= 0.01 hrs

Constant Inflow= 110.00 cfs

Summary for Link 8L: PRIMARY - Crown Colony Drive/Centre Street

Primary = 0.00 cfs @ 0.00 hrs, Volume= 0.000 af

Primary outflow = Inflow, Time Span= 0.00-28.00 hrs, dt= 0.01 hrs

Summary for Link 9L: SECONDARY - Burgin Parkway Culvert

Primary = 0.00 cfs @ 0.00 hrs, Volume= 0.000 af

Primary outflow = Inflow, Time Span= 0.00-28.00 hrs, dt= 0.01 hrs

Crown Colony Stormwater Basin Outlet Control Structures
Proposed Conditions

EBI Consulting
environmental | engineering | due diligence

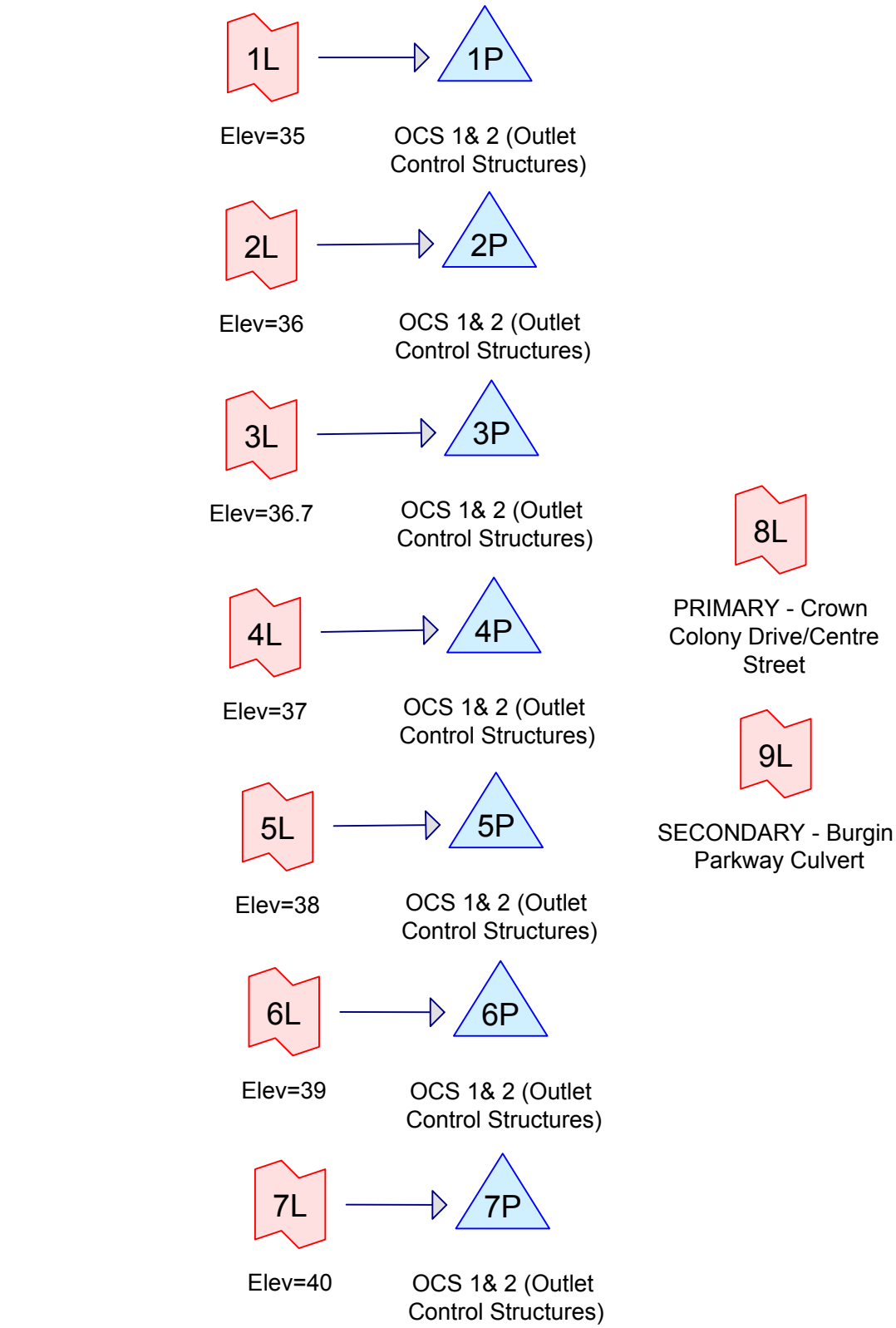

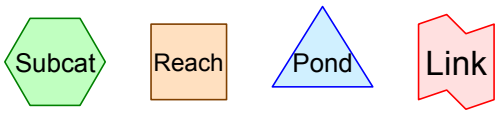

Routing Diagram for 16120008 TB LF Crown Colony OCS PR
Prepared by EBI Consulting, Printed 4/12/2013
HydroCAD® 10.00 s/n 07251 © 2011 HydroCAD Software Solutions LLC

Summary for Pond 1P: OCS 1& 2 (Outlet Control Structures)

Inflow	=	0.50 cfs @	0.00 hrs,	Volume=	1.157 af
Outflow	=	0.50 cfs @	28.00 hrs,	Volume=	1.063 af, Atten= 0%, Lag= 1,680.0 min
Primary	=	0.50 cfs @	28.00 hrs,	Volume=	1.063 af
Secondary	=	0.00 cfs @	0.00 hrs,	Volume=	0.000 af

Routing by Stor-Ind method, Time Span= 0.00-28.00 hrs, dt= 0.01 hrs
Peak Elev= 35.01' @ 28.00 hrs Surf.Area= 41,741 sf Storage= 4,129 cf

Plug-Flow detention time= 127.5 min calculated for 1.062 af (92% of inflow)
Center-of-Mass det. time= 58.4 min (898.4 - 840.0)

Volume	Invert	Avail.Storage	Storage Description
#1	34.75'	466,050 cf	**Custom Stage Data (Irregular)** Listed below (Recalc)

Elevation (feet)	Surf.Area (sq-ft)	Perim. (feet)	Inc.Store (cubic-feet)	Cum.Store (cubic-feet)	Wet.Area (sq-ft)
34.75	17	16.0	0	0	17
35.00	41,610	1,315.0	3,539	3,539	137,604
36.00	51,406	1,366.0	46,422	49,961	148,567
37.00	62,872	1,420.0	57,043	107,004	160,620
42.00	81,134	1,513.0	359,046	466,050	183,531

Device	Routing	Invert	Outlet Devices
#1	Primary	27.50'	**42.0" Round Culvert-OCS2 Outlet Pipe** L= 236.0' RCP, square edge headwall, Ke= 0.500 Inlet / Outlet Invert= 27.50' / 27.39' S= 0.0005 '/' Cc= 0.900 n= 0.013, Flow Area= 9.62 sf
#2	Device 1	34.58'	**24.0" Vert. Orifice/Grate-OCS2 Inlet** C= 0.600
#3	Device 1	39.34'	**60.0" x 60.0" Horiz. Orifice/Grate-OCS2 Overflow** C= 0.600 Limited to weir flow at low heads
#4	Device 2	34.75'	**24.0" Round Culvert-OCS2 FES** L= 5.0' RCP, groove end projecting, Ke= 0.200 Inlet / Outlet Invert= 34.75' / 34.58' S= 0.0340 '/' Cc= 0.900 n= 0.013, Flow Area= 3.14 sf
#5	Secondary	30.16'	**48.0" Round Culvert-OCS1 Outlet Pipe** L= 178.0' RCP, square edge headwall, Ke= 0.500 Inlet / Outlet Invert= 30.16' / 29.38' S= 0.0044 '/' Cc= 0.900 n= 0.013, Flow Area= 12.57 sf
#6	Device 5	33.81'	**24.0" Vert. Orifice/Grate-OCS1 Inlet** C= 0.600
#7	Device 5	39.73'	**60.0" x 60.0" Horiz. Orifice/Grate-OCS1 Overflow** C= 0.600 Limited to weir flow at low heads
#8	Device 6	34.75'	**48.0" Round Culvert-OCS1 FES** L= 8.0' RCP, groove end projecting, Ke= 0.200 Inlet / Outlet Invert= 34.75' / 33.81' S= 0.1175 '/' Cc= 0.900 n= 0.013, Flow Area= 12.57 sf
#9	Device 8	36.70'	**45.0' long x 1.0' breadth Broad-Crested Rectangular Weir** Head (feet) 0.20 0.40 0.60 0.80 1.00 1.20 1.40 1.60 1.80 2.00 2.50 3.00 Coef. (English) 2.69 2.72 2.75 2.85 2.98 3.08 3.20 3.28 3.31

3.30 3.31 3.32

Primary OutFlow Max=0.50 cfs @ 28.00 hrs HW=35.01' (Free Discharge)
└─**1=Culvert-OCS2 Outlet Pipe** (Passes 0.50 cfs of 92.15 cfs potential flow)
  ├─**2=Orifice/Grate-OCS2 Inlet** (Passes 0.50 cfs of 1.13 cfs potential flow)
  │ └─**4=Culvert-OCS2 FES** (Barrel Controls 0.50 cfs @ 3.09 fps)
  └─**3=Orifice/Grate-OCS2 Overflow** (Controls 0.00 cfs)

Secondary OutFlow Max=0.00 cfs @ 0.00 hrs HW=34.76' (Free Discharge)
└─**5=Culvert-OCS1 Outlet Pipe** (Passes 0.00 cfs of 86.88 cfs potential flow)
  ├─**6=Orifice/Grate-OCS1 Inlet** (Passes 0.00 cfs of 4.85 cfs potential flow)
  │ └─**8=Culvert-OCS1 FES** (Passes 0.00 cfs of 0.00 cfs potential flow)
  │ └─**9=Broad-Crested Rectangular Weir** (Controls 0.00 cfs)
  └─**7=Orifice/Grate-OCS1 Overflow** (Controls 0.00 cfs)

Summary for Pond 2P: OCS 1& 2 (Outlet Control Structures)

Inflow	=	7.20 cfs @	0.00 hrs,	Volume=	16.667 af
Outflow	=	7.20 cfs @	28.00 hrs,	Volume=	15.516 af, Atten= 0%, Lag= 1,680.0 min
Primary	=	7.20 cfs @	28.00 hrs,	Volume=	15.516 af
Secondary	=	0.00 cfs @	0.00 hrs,	Volume=	0.000 af

Routing by Stor-Ind method, Time Span= 0.00-28.00 hrs, dt= 0.01 hrs
Peak Elev= 36.00' @ 28.00 hrs Surf.Area= 51,448 sf Storage= 50,159 cf

Plug-Flow detention time= 113.3 min calculated for 15.507 af (93% of inflow)
Center-of-Mass det. time= 54.9 min (894.9 - 840.0)

Volume	Invert	Avail.Storage	Storage Description
#1	34.75'	466,050 cf	**Custom Stage Data (Irregular)** Listed below (Recalc)

Elevation (feet)	Surf.Area (sq-ft)	Perim. (feet)	Inc.Store (cubic-feet)	Cum.Store (cubic-feet)	Wet.Area (sq-ft)
34.75	17	16.0	0	0	17
35.00	41,610	1,315.0	3,539	3,539	137,604
36.00	51,406	1,366.0	46,422	49,961	148,567
37.00	62,872	1,420.0	57,043	107,004	160,620
42.00	81,134	1,513.0	359,046	466,050	183,531

Device	Routing	Invert	Outlet Devices
#1	Primary	27.50'	**42.0" Round Culvert-OCS2 Outlet Pipe** L= 236.0' RCP, square edge headwall, Ke= 0.500 Inlet / Outlet Invert= 27.50' / 27.39' S= 0.0005 '/' Cc= 0.900 n= 0.013, Flow Area= 9.62 sf
#2	Device 1	34.58'	**24.0" Vert. Orifice/Grate-OCS2 Inlet** C= 0.600
#3	Device 1	39.34'	**60.0" x 60.0" Horiz. Orifice/Grate-OCS2 Overflow** C= 0.600 Limited to weir flow at low heads
#4	Device 2	34.75'	**24.0" Round Culvert-OCS2 FES** L= 5.0' RCP, groove end projecting, Ke= 0.200 Inlet / Outlet Invert= 34.75' / 34.58' S= 0.0340 '/' Cc= 0.900 n= 0.013, Flow Area= 3.14 sf

#5	Secondary	30.16'	**48.0" Round Culvert-OCS1 Outlet Pipe** L= 178.0' RCP, square edge headwall, Ke= 0.500 Inlet / Outlet Invert= 30.16' / 29.38' S= 0.0044 '/' Cc= 0.900 n= 0.013, Flow Area= 12.57 sf
#6	Device 5	33.81'	**24.0" Vert. Orifice/Grate-OCS1 Inlet** C= 0.600
#7	Device 5	39.73'	**60.0" x 60.0" Horiz. Orifice/Grate-OCS1 Overflow** C= 0.600 Limited to weir flow at low heads
#8	Device 6	34.75'	**48.0" Round Culvert-OCS1 FES** L= 8.0' RCP, groove end projecting, Ke= 0.200 Inlet / Outlet Invert= 34.75' / 33.81' S= 0.1175 '/' Cc= 0.900 n= 0.013, Flow Area= 12.57 sf
#9	Device 8	36.70'	**45.0' long x 1.0' breadth Broad-Crested Rectangular Weir** Head (feet) 0.20 0.40 0.60 0.80 1.00 1.20 1.40 1.60 1.80 2.00 2.50 3.00 Coef. (English) 2.69 2.72 2.75 2.85 2.98 3.08 3.20 3.28 3.31 3.30 3.31 3.32

Primary OutFlow Max=7.20 cfs @ 28.00 hrs HW=36.00' (Free Discharge)
- **1=Culvert-OCS2 Outlet Pipe** (Passes 7.20 cfs of 102.62 cfs potential flow)
  - **2=Orifice/Grate-OCS2 Inlet** (Passes 7.20 cfs of 9.72 cfs potential flow)
    - **4=Culvert-OCS2 FES** (Barrel Controls 7.20 cfs @ 4.96 fps)
  - **3=Orifice/Grate-OCS2 Overflow** (Controls 0.00 cfs)

Secondary OutFlow Max=0.00 cfs @ 0.00 hrs HW=34.83' (Free Discharge)
- **5=Culvert-OCS1 Outlet Pipe** (Passes 0.00 cfs of 88.27 cfs potential flow)
  - **6=Orifice/Grate-OCS1 Inlet** (Passes 0.00 cfs of 5.50 cfs potential flow)
    - **8=Culvert-OCS1 FES** (Passes 0.00 cfs of 0.06 cfs potential flow)
      - **9=Broad-Crested Rectangular Weir** (Controls 0.00 cfs)
  - **7=Orifice/Grate-OCS1 Overflow** (Controls 0.00 cfs)

Summary for Pond 3P: OCS 1& 2 (Outlet Control Structures)

Inflow	=	14.30 cfs @	0.00 hrs,	Volume=	33.103 af
Outflow	=	14.30 cfs @	28.00 hrs,	Volume=	31.071 af, Atten= 0%, Lag= 1,680.0 min
Primary	=	14.30 cfs @	28.00 hrs,	Volume=	31.071 af
Secondary	=	0.00 cfs @	0.00 hrs,	Volume=	0.000 af

Routing by Stor-Ind method, Time Span= 0.00-28.00 hrs, dt= 0.01 hrs
Peak Elev= 36.70' @ 28.00 hrs Surf.Area= 59,274 sf Storage= 88,489 cf

Plug-Flow detention time= 100.7 min calculated for 31.065 af (94% of inflow)
Center-of-Mass det. time= 48.9 min (888.9 - 840.0)

Volume	Invert	Avail.Storage	Storage Description
#1	34.75'	466,050 cf	**Custom Stage Data (Irregular)** Listed below (Recalc)

Elevation (feet)	Surf.Area (sq-ft)	Perim. (feet)	Inc.Store (cubic-feet)	Cum.Store (cubic-feet)	Wet.Area (sq-ft)
34.75	17	16.0	0	0	17
35.00	41,610	1,315.0	3,539	3,539	137,604
36.00	51,406	1,366.0	46,422	49,961	148,567
37.00	62,872	1,420.0	57,043	107,004	160,620
42.00	81,134	1,513.0	359,046	466,050	183,531

Device	Routing	Invert	Outlet Devices
#1	Primary	27.50'	**42.0" Round Culvert-OCS2 Outlet Pipe** L= 236.0' RCP, square edge headwall, Ke= 0.500 Inlet / Outlet Invert= 27.50' / 27.39' S= 0.0005 '/' Cc= 0.900 n= 0.013, Flow Area= 9.62 sf
#2	Device 1	34.58'	**24.0" Vert. Orifice/Grate-OCS2 Inlet** C= 0.600
#3	Device 1	39.34'	**60.0" x 60.0" Horiz. Orifice/Grate-OCS2 Overflow** C= 0.600 Limited to weir flow at low heads
#4	Device 2	34.75'	**24.0" Round Culvert-OCS2 FES** L= 5.0' RCP, groove end projecting, Ke= 0.200 Inlet / Outlet Invert= 34.75' / 34.58' S= 0.0340 '/' Cc= 0.900 n= 0.013, Flow Area= 3.14 sf
#5	Secondary	30.16'	**48.0" Round Culvert-OCS1 Outlet Pipe** L= 178.0' RCP, square edge headwall, Ke= 0.500 Inlet / Outlet Invert= 30.16' / 29.38' S= 0.0044 '/' Cc= 0.900 n= 0.013, Flow Area= 12.57 sf
#6	Device 5	33.81'	**24.0" Vert. Orifice/Grate-OCS1 Inlet** C= 0.600
#7	Device 5	39.73'	**60.0" x 60.0" Horiz. Orifice/Grate-OCS1 Overflow** C= 0.600 Limited to weir flow at low heads
#8	Device 6	34.75'	**48.0" Round Culvert-OCS1 FES** L= 8.0' RCP, groove end projecting, Ke= 0.200 Inlet / Outlet Invert= 34.75' / 33.81' S= 0.1175 '/' Cc= 0.900 n= 0.013, Flow Area= 12.57 sf
#9	Device 8	36.70'	**45.0' long x 1.0' breadth Broad-Crested Rectangular Weir** Head (feet) 0.20 0.40 0.60 0.80 1.00 1.20 1.40 1.60 1.80 2.00 2.50 3.00 Coef. (English) 2.69 2.72 2.75 2.85 2.98 3.08 3.20 3.28 3.31 3.30 3.31 3.32

Primary OutFlow Max=14.30 cfs @ 28.00 hrs HW=36.70' (Free Discharge)
- **1=Culvert-OCS2 Outlet Pipe** (Passes 14.30 cfs of 109.35 cfs potential flow)
  - **2=Orifice/Grate-OCS2 Inlet** (Passes 14.30 cfs of 15.99 cfs potential flow)
    - **4=Culvert-OCS2 FES** (Barrel Controls 14.30 cfs @ 5.82 fps)
  - **3=Orifice/Grate-OCS2 Overflow** (Controls 0.00 cfs)

Secondary OutFlow Max=0.00 cfs @ 0.00 hrs HW=34.84' (Free Discharge)
- **5=Culvert-OCS1 Outlet Pipe** (Passes 0.00 cfs of 88.56 cfs potential flow)
  - **6=Orifice/Grate-OCS1 Inlet** (Passes 0.00 cfs of 5.64 cfs potential flow)
    - **8=Culvert-OCS1 FES** (Passes 0.00 cfs of 0.09 cfs potential flow)
      - **9=Broad-Crested Rectangular Weir** (Controls 0.00 cfs)
  - **7=Orifice/Grate-OCS1 Overflow** (Controls 0.00 cfs)

Summary for Pond 4P: OCS 1& 2 (Outlet Control Structures)

Inflow	=	37.60 cfs @	0.00 hrs,	Volume=	87.039 af
Outflow	=	37.60 cfs @	11.69 hrs,	Volume=	84.577 af, Atten= 0%, Lag= 701.4 min
Primary	=	17.43 cfs @	11.69 hrs,	Volume=	39.607 af
Secondary	=	20.17 cfs @	11.69 hrs,	Volume=	44.969 af

Routing by Stor-Ind method, Time Span= 0.00-28.00 hrs, dt= 0.01 hrs
Peak Elev= 37.00' @ 11.67 hrs Surf.Area= 62,887 sf Storage= 107,278 cf

Plug-Flow detention time= 47.7 min calculated for 84.531 af (97% of inflow)
Center-of-Mass det. time= 23.6 min (863.6 - 840.0)

Volume	Invert	Avail.Storage	Storage Description
#1	34.75'	466,050 cf	**Custom Stage Data (Irregular)** Listed below (Recalc)

Elevation (feet)	Surf.Area (sq-ft)	Perim. (feet)	Inc.Store (cubic-feet)	Cum.Store (cubic-feet)	Wet.Area (sq-ft)
34.75	17	16.0	0	0	17
35.00	41,610	1,315.0	3,539	3,539	137,604
36.00	51,406	1,366.0	46,422	49,961	148,567
37.00	62,872	1,420.0	57,043	107,004	160,620
42.00	81,134	1,513.0	359,046	466,050	183,531

Device	Routing	Invert	Outlet Devices
#1	Primary	27.50'	**42.0" Round Culvert-OCS2 Outlet Pipe** L= 236.0' RCP, square edge headwall, Ke= 0.500 Inlet / Outlet Invert= 27.50' / 27.39' S= 0.0005 '/' Cc= 0.900 n= 0.013, Flow Area= 9.62 sf
#2	Device 1	34.58'	**24.0" Vert. Orifice/Grate-OCS2 Inlet** C= 0.600
#3	Device 1	39.34'	**60.0" x 60.0" Horiz. Orifice/Grate-OCS2 Overflow** C= 0.600 Limited to weir flow at low heads
#4	Device 2	34.75'	**24.0" Round Culvert-OCS2 FES** L= 5.0' RCP, groove end projecting, Ke= 0.200 Inlet / Outlet Invert= 34.75' / 34.58' S= 0.0340 '/' Cc= 0.900 n= 0.013, Flow Area= 3.14 sf
#5	Secondary	30.16'	**48.0" Round Culvert-OCS1 Outlet Pipe** L= 178.0' RCP, square edge headwall, Ke= 0.500 Inlet / Outlet Invert= 30.16' / 29.38' S= 0.0044 '/' Cc= 0.900 n= 0.013, Flow Area= 12.57 sf
#6	Device 5	33.81'	**24.0" Vert. Orifice/Grate-OCS1 Inlet** C= 0.600
#7	Device 5	39.73'	**60.0" x 60.0" Horiz. Orifice/Grate-OCS1 Overflow** C= 0.600 Limited to weir flow at low heads
#8	Device 6	34.75'	**48.0" Round Culvert-OCS1 FES** L= 8.0' RCP, groove end projecting, Ke= 0.200 Inlet / Outlet Invert= 34.75' / 33.81' S= 0.1175 '/' Cc= 0.900 n= 0.013, Flow Area= 12.57 sf
#9	Device 8	36.70'	**45.0' long x 1.0' breadth Broad-Crested Rectangular Weir** Head (feet) 0.20 0.40 0.60 0.80 1.00 1.20 1.40 1.60 1.80 2.00 2.50 3.00 Coef. (English) 2.69 2.72 2.75 2.85 2.98 3.08 3.20 3.28 3.31

3.30 3.31 3.32

Primary OutFlow Max=17.43 cfs @ 11.69 hrs HW=37.00' (Free Discharge)
- **1=Culvert-OCS2 Outlet Pipe** (Passes 17.43 cfs of 112.21 cfs potential flow)
  - **2=Orifice/Grate-OCS2 Inlet** (Passes 17.43 cfs of 18.05 cfs potential flow)
    - **4=Culvert-OCS2 FES** (Barrel Controls 17.43 cfs @ 6.15 fps)
  - **3=Orifice/Grate-OCS2 Overflow** (Controls 0.00 cfs)

Secondary OutFlow Max=20.44 cfs @ 11.69 hrs HW=37.00' (Free Discharge)
- **5=Culvert-OCS1 Outlet Pipe** (Passes 20.44 cfs of 124.43 cfs potential flow)
  - **6=Orifice/Grate-OCS1 Inlet** (Passes 20.44 cfs of 22.41 cfs potential flow)
    - **8=Culvert-OCS1 FES** (Passes 20.44 cfs of 44.53 cfs potential flow)
      - **9=Broad-Crested Rectangular Weir** (Weir Controls 20.44 cfs @ 1.49 fps)
  - **7=Orifice/Grate-OCS1 Overflow** (Controls 0.00 cfs)

Summary for Pond 5P: OCS 1& 2 (Outlet Control Structures)

Inflow	=	50.50 cfs @	0.00 hrs,	Volume=	116.901 af
Outflow	=	50.50 cfs @	28.00 hrs,	Volume=	112.970 af, Atten= 0%, Lag= 1,680.0 min
Primary	=	23.51 cfs @	28.00 hrs,	Volume=	52.718 af
Secondary	=	26.99 cfs @	28.00 hrs,	Volume=	60.252 af

Routing by Stor-Ind method, Time Span= 0.00-28.00 hrs, dt= 0.01 hrs
Peak Elev= 37.99' @ 28.00 hrs Surf.Area= 66,320 sf Storage= 171,252 cf

Plug-Flow detention time= 55.3 min calculated for 112.909 af (97% of inflow)
Center-of-Mass det. time= 26.7 min (866.7 - 840.0)

Volume	Invert	Avail.Storage	Storage Description
#1	34.75'	466,050 cf	**Custom Stage Data (Irregular)** Listed below (Recalc)

Elevation (feet)	Surf.Area (sq-ft)	Perim. (feet)	Inc.Store (cubic-feet)	Cum.Store (cubic-feet)	Wet.Area (sq-ft)
34.75	17	16.0	0	0	17
35.00	41,610	1,315.0	3,539	3,539	137,604
36.00	51,406	1,366.0	46,422	49,961	148,567
37.00	62,872	1,420.0	57,043	107,004	160,620
42.00	81,134	1,513.0	359,046	466,050	183,531

Device	Routing	Invert	Outlet Devices
#1	Primary	27.50'	**42.0" Round Culvert-OCS2 Outlet Pipe** L= 236.0' RCP, square edge headwall, Ke= 0.500 Inlet / Outlet Invert= 27.50' / 27.39' S= 0.0005 '/' Cc= 0.900 n= 0.013, Flow Area= 9.62 sf
#2	Device 1	34.58'	**24.0" Vert. Orifice/Grate-OCS2 Inlet** C= 0.600
#3	Device 1	39.34'	**60.0" x 60.0" Horiz. Orifice/Grate-OCS2 Overflow** C= 0.600 Limited to weir flow at low heads
#4	Device 2	34.75'	**24.0" Round Culvert-OCS2 FES** L= 5.0' RCP, groove end projecting, Ke= 0.200 Inlet / Outlet Invert= 34.75' / 34.58' S= 0.0340 '/' Cc= 0.900 n= 0.013, Flow Area= 3.14 sf

#5	Secondary	30.16'	**48.0" Round Culvert-OCS1 Outlet Pipe** L= 178.0' RCP, square edge headwall, Ke= 0.500 Inlet / Outlet Invert= 30.16' / 29.38' S= 0.0044 '/' Cc= 0.900 n= 0.013, Flow Area= 12.57 sf
#6	Device 5	33.81'	**24.0" Vert. Orifice/Grate-OCS1 Inlet** C= 0.600
#7	Device 5	39.73'	**60.0" x 60.0" Horiz. Orifice/Grate-OCS1 Overflow** C= 0.600 Limited to weir flow at low heads
#8	Device 6	34.75'	**48.0" Round Culvert-OCS1 FES** L= 8.0' RCP, groove end projecting, Ke= 0.200 Inlet / Outlet Invert= 34.75' / 33.81' S= 0.1175 '/' Cc= 0.900 n= 0.013, Flow Area= 12.57 sf
#9	Device 8	36.70'	**45.0' long x 1.0' breadth Broad-Crested Rectangular Weir** Head (feet) 0.20 0.40 0.60 0.80 1.00 1.20 1.40 1.60 1.80 2.00 2.50 3.00 Coef. (English) 2.69 2.72 2.75 2.85 2.98 3.08 3.20 3.28 3.31 3.30 3.31 3.32

Primary OutFlow Max=23.51 cfs @ 28.00 hrs HW=37.99' (Free Discharge)
- **1=Culvert-OCS2 Outlet Pipe** (Passes 23.51 cfs of 120.95 cfs potential flow)
  - **2=Orifice/Grate-OCS2 Inlet** (Orifice Controls 23.51 cfs @ 7.48 fps)
    - **4=Culvert-OCS2 FES** (Passes 23.51 cfs of 26.69 cfs potential flow)
  - **3=Orifice/Grate-OCS2 Overflow** (Controls 0.00 cfs)

Secondary OutFlow Max=26.99 cfs @ 28.00 hrs HW=37.99' (Free Discharge)
- **5=Culvert-OCS1 Outlet Pipe** (Passes 26.99 cfs of 140.41 cfs potential flow)
  - **6=Orifice/Grate-OCS1 Inlet** (Orifice Controls 26.99 cfs @ 8.59 fps)
    - **8=Culvert-OCS1 FES** (Passes 26.99 cfs of 76.51 cfs potential flow)
      - **9=Broad-Crested Rectangular Weir** (Passes 26.99 cfs of 207.96 cfs potential flow)
  - **7=Orifice/Grate-OCS1 Overflow** (Controls 0.00 cfs)

Summary for Pond 6P: OCS 1& 2 (Outlet Control Structures)

Inflow	=	58.90 cfs @	0.00 hrs,	Volume=	136.346 af
Outflow	=	58.90 cfs @	28.00 hrs,	Volume=	130.851 af, Atten= 0%, Lag= 1,680.0 min
Primary	=	27.95 cfs @	28.00 hrs,	Volume=	62.126 af
Secondary	=	30.95 cfs @	28.00 hrs,	Volume=	68.725 af

Routing by Stor-Ind method, Time Span= 0.00-28.00 hrs, dt= 0.01 hrs
Peak Elev= 39.00' @ 28.00 hrs Surf.Area= 69,881 sf Storage= 239,377 cf

Plug-Flow detention time= 65.2 min calculated for 130.827 af (96% of inflow)
Center-of-Mass det. time= 31.0 min (871.0 - 840.0)

Volume	Invert	Avail.Storage	Storage Description
#1	34.75'	466,050 cf	**Custom Stage Data (Irregular)** Listed below (Recalc)

Elevation (feet)	Surf.Area (sq-ft)	Perim. (feet)	Inc.Store (cubic-feet)	Cum.Store (cubic-feet)	Wet.Area (sq-ft)
34.75	17	16.0	0	0	17
35.00	41,610	1,315.0	3,539	3,539	137,604
36.00	51,406	1,366.0	46,422	49,961	148,567
37.00	62,872	1,420.0	57,043	107,004	160,620
42.00	81,134	1,513.0	359,046	466,050	183,531

Device	Routing	Invert	Outlet Devices
#1	Primary	27.50'	**42.0" Round Culvert-OCS2 Outlet Pipe** L= 236.0' RCP, square edge headwall, Ke= 0.500 Inlet / Outlet Invert= 27.50' / 27.39' S= 0.0005 '/' Cc= 0.900 n= 0.013, Flow Area= 9.62 sf
#2	Device 1	34.58'	**24.0" Vert. Orifice/Grate-OCS2 Inlet** C= 0.600
#3	Device 1	39.34'	**60.0" x 60.0" Horiz. Orifice/Grate-OCS2 Overflow** C= 0.600 Limited to weir flow at low heads
#4	Device 2	34.75'	**24.0" Round Culvert-OCS2 FES** L= 5.0' RCP, groove end projecting, Ke= 0.200 Inlet / Outlet Invert= 34.75' / 34.58' S= 0.0340 '/' Cc= 0.900 n= 0.013, Flow Area= 3.14 sf
#5	Secondary	30.16'	**48.0" Round Culvert-OCS1 Outlet Pipe** L= 178.0' RCP, square edge headwall, Ke= 0.500 Inlet / Outlet Invert= 30.16' / 29.38' S= 0.0044 '/' Cc= 0.900 n= 0.013, Flow Area= 12.57 sf
#6	Device 5	33.81'	**24.0" Vert. Orifice/Grate-OCS1 Inlet** C= 0.600
#7	Device 5	39.73'	**60.0" x 60.0" Horiz. Orifice/Grate-OCS1 Overflow** C= 0.600 Limited to weir flow at low heads
#8	Device 6	34.75'	**48.0" Round Culvert-OCS1 FES** L= 8.0' RCP, groove end projecting, Ke= 0.200 Inlet / Outlet Invert= 34.75' / 33.81' S= 0.1175 '/' Cc= 0.900 n= 0.013, Flow Area= 12.57 sf
#9	Device 8	36.70'	**45.0' long x 1.0' breadth Broad-Crested Rectangular Weir** Head (feet) 0.20 0.40 0.60 0.80 1.00 1.20 1.40 1.60 1.80 2.00 2.50 3.00 Coef. (English) 2.69 2.72 2.75 2.85 2.98 3.08 3.20 3.28 3.31 3.30 3.31 3.32

Primary OutFlow Max=27.95 cfs @ 28.00 hrs HW=39.00' (Free Discharge)
- **1=Culvert-OCS2 Outlet Pipe** (Passes 27.95 cfs of 129.19 cfs potential flow)
  - **2=Orifice/Grate-OCS2 Inlet** (Orifice Controls 27.95 cfs @ 8.90 fps)
    - **4=Culvert-OCS2 FES** (Passes 27.95 cfs of 34.06 cfs potential flow)
  - **3=Orifice/Grate-OCS2 Overflow** (Controls 0.00 cfs)

Secondary OutFlow Max=30.95 cfs @ 28.00 hrs HW=39.00' (Free Discharge)
- **5=Culvert-OCS1 Outlet Pipe** (Passes 30.95 cfs of 154.88 cfs potential flow)
  - **6=Orifice/Grate-OCS1 Inlet** (Orifice Controls 30.95 cfs @ 9.85 fps)
    - **8=Culvert-OCS1 FES** (Passes 30.95 cfs of 109.77 cfs potential flow)
      - **9=Broad-Crested Rectangular Weir** (Passes 30.95 cfs of 517.29 cfs potential flow)
  - **7=Orifice/Grate-OCS1 Overflow** (Controls 0.00 cfs)

Summary for Pond 7P: OCS 1& 2 (Outlet Control Structures)

Inflow	=	110.00 cfs @	0.00 hrs,	Volume=	254.636 af
Outflow	=	110.00 cfs @	5.83 hrs,	Volume=	247.494 af, Atten= 0%, Lag= 349.8 min
Primary	=	66.54 cfs @	5.83 hrs,	Volume=	149.229 af
Secondary	=	43.46 cfs @	5.83 hrs,	Volume=	98.265 af

Routing by Stor-Ind method, Time Span= 0.00-28.00 hrs, dt= 0.01 hrs
Peak Elev= 40.00' @ 5.77 hrs Surf.Area= 73,534 sf Storage= 311,108 cf

Plug-Flow detention time= 47.1 min calculated for 247.361 af (97% of inflow)
Center-of-Mass det. time= 23.3 min (863.3 - 840.0)

Volume	Invert	Avail.Storage	Storage Description
#1	34.75'	466,050 cf	**Custom Stage Data (Irregular)** Listed below (Recalc)

Elevation (feet)	Surf.Area (sq-ft)	Perim. (feet)	Inc.Store (cubic-feet)	Cum.Store (cubic-feet)	Wet.Area (sq-ft)
34.75	17	16.0	0	0	17
35.00	41,610	1,315.0	3,539	3,539	137,604
36.00	51,406	1,366.0	46,422	49,961	148,567
37.00	62,872	1,420.0	57,043	107,004	160,620
42.00	81,134	1,513.0	359,046	466,050	183,531

Device	Routing	Invert	Outlet Devices
#1	Primary	27.50'	**42.0" Round Culvert-OCS2 Outlet Pipe** L= 236.0' RCP, square edge headwall, Ke= 0.500 Inlet / Outlet Invert= 27.50' / 27.39' S= 0.0005 '/' Cc= 0.900 n= 0.013, Flow Area= 9.62 sf
#2	Device 1	34.58'	**24.0" Vert. Orifice/Grate-OCS2 Inlet** C= 0.600
#3	Device 1	39.34'	**60.0" x 60.0" Horiz. Orifice/Grate-OCS2 Overflow** C= 0.600 Limited to weir flow at low heads
#4	Device 2	34.75'	**24.0" Round Culvert-OCS2 FES** L= 5.0' RCP, groove end projecting, Ke= 0.200 Inlet / Outlet Invert= 34.75' / 34.58' S= 0.0340 '/' Cc= 0.900 n= 0.013, Flow Area= 3.14 sf
#5	Secondary	30.16'	**48.0" Round Culvert-OCS1 Outlet Pipe** L= 178.0' RCP, square edge headwall, Ke= 0.500 Inlet / Outlet Invert= 30.16' / 29.38' S= 0.0044 '/' Cc= 0.900 n= 0.013, Flow Area= 12.57 sf
#6	Device 5	33.81'	**24.0" Vert. Orifice/Grate-OCS1 Inlet** C= 0.600
#7	Device 5	39.73'	**60.0" x 60.0" Horiz. Orifice/Grate-OCS1 Overflow** C= 0.600 Limited to weir flow at low heads
#8	Device 6	34.75'	**48.0" Round Culvert-OCS1 FES** L= 8.0' RCP, groove end projecting, Ke= 0.200 Inlet / Outlet Invert= 34.75' / 33.81' S= 0.1175 '/' Cc= 0.900 n= 0.013, Flow Area= 12.57 sf
#9	Device 8	36.70'	**45.0' long x 1.0' breadth Broad-Crested Rectangular Weir** Head (feet) 0.20 0.40 0.60 0.80 1.00 1.20 1.40 1.60 1.80 2.00 2.50 3.00 Coef. (English) 2.69 2.72 2.75 2.85 2.98 3.08 3.20 3.28 3.31

3.30 3.31 3.32

Primary OutFlow Max=66.51 cfs @ 5.83 hrs HW=40.00' (Free Discharge)
└─**1=Culvert-OCS2 Outlet Pipe** (Passes 66.51 cfs of 136.93 cfs potential flow)
  ├─**2=Orifice/Grate-OCS2 Inlet** (Orifice Controls 31.79 cfs @ 10.12 fps)
  │ └─**4=Culvert-OCS2 FES** (Passes 31.79 cfs of 38.96 cfs potential flow)
  └─**3=Orifice/Grate-OCS2 Overflow** (Weir Controls 34.72 cfs @ 2.65 fps)

Secondary OutFlow Max=43.40 cfs @ 5.83 hrs HW=40.00' (Free Discharge)
└─**5=Culvert-OCS1 Outlet Pipe** (Passes 43.40 cfs of 168.11 cfs potential flow)
  ├─**6=Orifice/Grate-OCS1 Inlet** (Orifice Controls 34.45 cfs @ 10.96 fps)
  │ └─**8=Culvert-OCS1 FES** (Passes 34.45 cfs of 135.65 cfs potential flow)
  │ └─**9=Broad-Crested Rectangular Weir** (Passes 34.45 cfs of 893.84 cfs potential flow)
  └─**7=Orifice/Grate-OCS1 Overflow** (Weir Controls 8.95 cfs @ 1.69 fps)

Summary for Link 1L: Elev=35

Inflow	=	0.50 cfs @	0.00 hrs, Volume=	1.157 af	
Primary	=	0.50 cfs @	0.00 hrs, Volume=	1.157 af,	Atten= 0%, Lag= 0.0 min

Primary outflow = Inflow, Time Span= 0.00-28.00 hrs, dt= 0.01 hrs

Constant Inflow= 0.50 cfs

Summary for Link 2L: Elev=36

Inflow	=	7.20 cfs @	0.00 hrs, Volume=	16.667 af	
Primary	=	7.20 cfs @	0.00 hrs, Volume=	16.667 af,	Atten= 0%, Lag= 0.0 min

Primary outflow = Inflow, Time Span= 0.00-28.00 hrs, dt= 0.01 hrs

Constant Inflow= 7.20 cfs

Summary for Link 3L: Elev=36.7

Inflow	=	14.30 cfs @	0.00 hrs, Volume=	33.103 af	
Primary	=	14.30 cfs @	0.00 hrs, Volume=	33.103 af,	Atten= 0%, Lag= 0.0 min

Primary outflow = Inflow, Time Span= 0.00-28.00 hrs, dt= 0.01 hrs

Constant Inflow= 14.30 cfs

Summary for Link 4L: Elev=37

Inflow	=	37.60 cfs @	0.00 hrs, Volume=	87.039 af	
Primary	=	37.60 cfs @	0.00 hrs, Volume=	87.039 af,	Atten= 0%, Lag= 0.0 min

Primary outflow = Inflow, Time Span= 0.00-28.00 hrs, dt= 0.01 hrs

Constant Inflow= 37.60 cfs

Summary for Link 5L: Elev=38

Inflow	=	50.50 cfs @	0.00 hrs,	Volume=	116.901 af
Primary	=	50.50 cfs @	0.00 hrs,	Volume=	116.901 af, Atten= 0%, Lag= 0.0 min

Primary outflow = Inflow, Time Span= 0.00-28.00 hrs, dt= 0.01 hrs

Constant Inflow= 50.50 cfs

Summary for Link 6L: Elev=39

Inflow	=	58.90 cfs @	0.00 hrs,	Volume=	136.346 af
Primary	=	58.90 cfs @	0.00 hrs,	Volume=	136.346 af, Atten= 0%, Lag= 0.0 min

Primary outflow = Inflow, Time Span= 0.00-28.00 hrs, dt= 0.01 hrs

Constant Inflow= 58.90 cfs

Summary for Link 7L: Elev=40

Inflow	=	110.00 cfs @	0.00 hrs,	Volume=	254.636 af
Primary	=	110.00 cfs @	0.00 hrs,	Volume=	254.636 af, Atten= 0%, Lag= 0.0 min

Primary outflow = Inflow, Time Span= 0.00-28.00 hrs, dt= 0.01 hrs

Constant Inflow= 110.00 cfs

Summary for Link 8L: PRIMARY - Crown Colony Drive/Centre Street

Primary	=	0.00 cfs @	0.00 hrs,	Volume=	0.000 af

Primary outflow = Inflow, Time Span= 0.00-28.00 hrs, dt= 0.01 hrs

Summary for Link 9L: SECONDARY - Burgin Parkway Culvert

Primary	=	0.00 cfs @	0.00 hrs,	Volume=	0.000 af

Primary outflow = Inflow, Time Span= 0.00-28.00 hrs, dt= 0.01 hrs

viii – Water Quality Unit Technical Documentation

UNIVERSITY OF MASSACHUSETTS
AT AMHERST
Water Resources Research Center
Blaisdell House, UMass
310 Hicks Way
Amherst, MA 01003

Massachusetts Stormwater Evaluation Project

(413) 545-5532
(413) 545-2304 FAX
www.mastep.net

MASTEP Technology Review

Technology Name: Vortechs System. (Models 1000, 1100, 2000 and 4000 reviewed in these studies)

Studies Reviewed:

- NJCAT Technology Verification. Vortechs. April 2011
- A Study of the Effectiveness of a Vortechs Stormwater Treatment System for Removal of Total Suspended Solids, 2001. NYSDEC
- ETV Rpt. Stormwater Source Area Treatment Device. Vortechnics, inc. Vortechs System, Model 1000, 2005
- NJCAT Technology Verification Vortechnics, Inc. May 4, 2004
- Two Vendor-supplied studies conducted at Delorme Publishing Company, Yarmouth Maine

Date: 11/04/2011
Reviewer: Jerry Schoen

Rating: 1 for SSC, 2 for TSS

Brief rationale for rating: SSC rating is primarily based on the NJCAT 2011 field study; TSS on the ETV field study with some consideration of the NJCAT 2004 laboratory study. All have scientific merit. Both field studies (NJCAT and ETV) monitored 18 storms and provided detailed description of methods, quality control procedures and results. The NJCAT lab study tested a good range of flow rates, particle sizes, influent sediment concentrations. Problems: no scour test, large abnormally large particles sizes in the NJCAT field study; raw data not shown in ETV study, few details on test equipment or setup. Other studies reviewed offer some useful information, but had more significant quality control problems and/or lacked detailed discussion of methods.

TARP Requirements Not Met:

- NJCAT 2011: excessive quality control failure rate for TSS analysis
- ETV: At least 50% of annual rainfall must be sampled (36% was sampled)
- ETV: Minimum of 15" of precipitation must be sampled (11.8" were sampled)

Other Comments:

- NJCAT field study (2011). Conducted on a Vortechs Model 4000, at flows up to 97% design flow. Good documentation of quality control. Mean influent particle sizes were approximately 500 microns, well above the recommended < 100 microns. SSC results were reported for several discreet influent particle size ranges, with results of 52-95% depending on size. TSS and TVSS results not considered reliable in this study because of QC failures, likely due to the large particle sizes, which tend to skew results for this analysis method.
- ETV study: conducted on a Vortechs Model 1000. Quality control results were good, with the exception of some problems with outlet flow measurements. Inlet TSS concentrations were 46-305 mg/l, lower than the target of 100-300 mg/l. this is considered a strong point of the study, since performance usually suffers during "cleaner" storms. Similarly particle size analysis showed a high concentration of fines; most influent particles were less than 62 microns – producing influent sediments that are difficult to treat.
- NJCAT lab study: conducted on a Vortechs Model 2000. 64% TSS removal obtained.

CONTECH®
STORMWATER SOLUTIONS INC.

Vortechs® Guide
Operation, Design, Performance and Maintenance

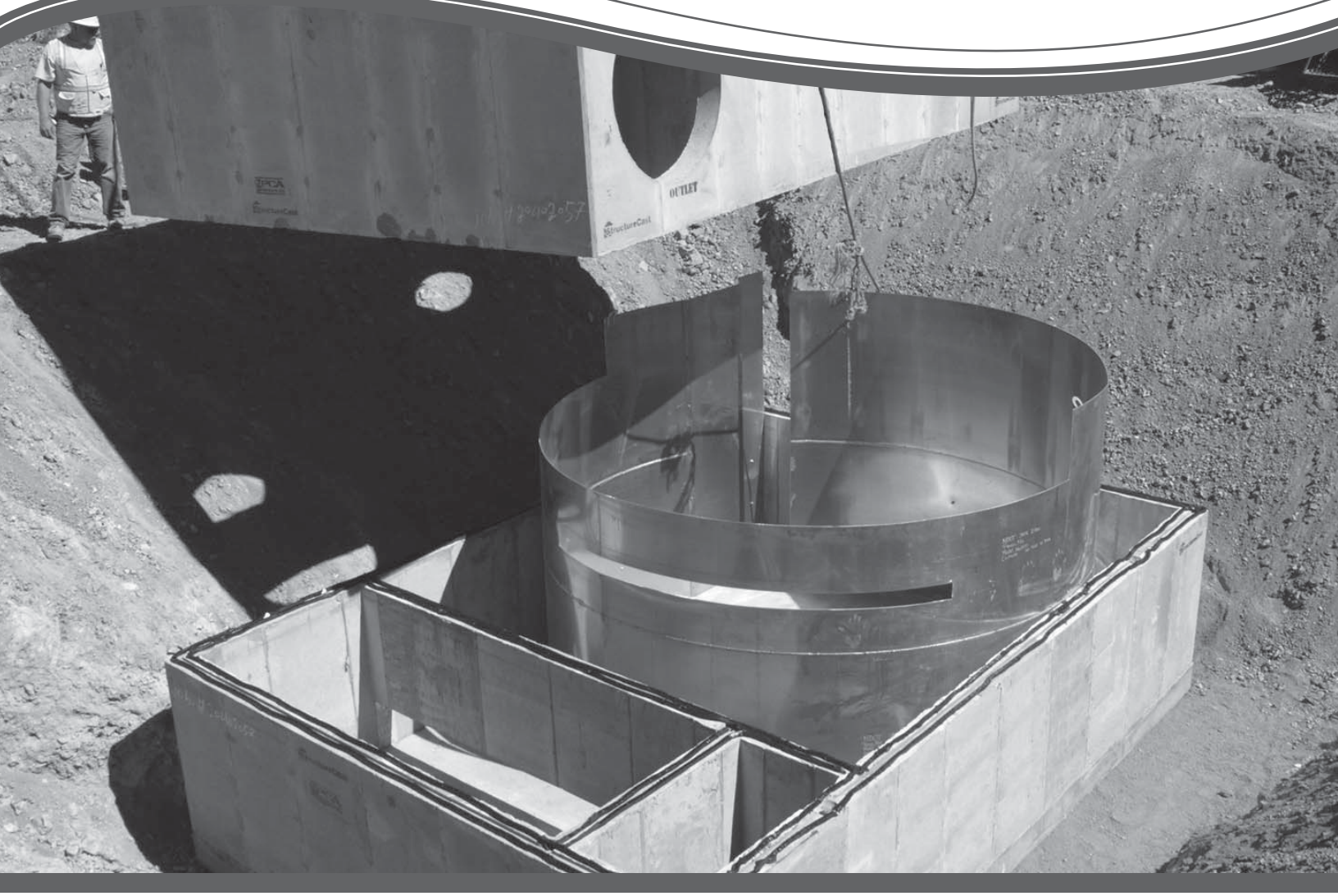

Vortechs®

Vortechs®

The Vortechs system is a high-performance hydrodynamic separator that effectively removes finer sediment (e.g. 50-microns (μm), oil, and floating and sinking debris. The swirl concentration operation and flow controls work together to minimize turbulence and provide stable storage of captured pollutants. Precast models can treat peak design flows up to 30-cfs (850-L/s); cast-in-place models handle even greater flows. A typical system is sized to provide a specific removal efficiency of a predefined particle size distribution (PSD).

Operation Overview

Stormwater enters the swirl chamber inducing a gentle swirling flow pattern and enhancing gravitational separation. Sinking pollutants stay in the swirl chamber while floatables are stopped at the baffle wall. Vortechs systems are usually sized to efficiently treat the frequently occurring runoff events and are primarily controlled by the low flow control orifice. This orifice effectively reduces inflow velocity and turbulence by inducing a slight backwater that is appropriate to the site.

During larger storms, the water level rises above the low flow control orifice and begins to flow through the high flow control. Any layer of floating pollutants is elevated above the invert of the Floatables Baffle Wall, preventing release. Swirling action increases in relation to the storm intensity, while sediment pile remains stable. When the storm drain is flowing at peak capacity, the water surface in the system approaches the top of the high flow control. The Vortechs system will be sized large enough so that previously captured pollutants are retained in the system, even during these infrequent events.

As a storm subsides, treated runoff decants out of the Vortechs system at a controlled rate, restoring the water level to a dry-weather level equal to the invert of the inlet pipe. The low water level facilitates easier inspection and cleaning, and significantly reduces maintenance costs by reducing pump-out volume.

Design Basics

Each Vortechs system is custom designed based on site size, site runoff coefficient, regional precipitation intensity distribution, and anticipated pollutant characteristics. There are two primary methods of sizing a Vortechs system. The first is to determine which model size provides the desired removal efficiency at a given flow for a defined particle size or PSD. The second and more in depth method is the summation of Rational Rainfall Method™ which uses a summation process described below in detail and is used when a specific removal efficiency of the net annual sediment load is required.

Typically Vortechs systems are designed to achieve an 80% annual solids load reduction based on lab generated performance curves for either 50-μm particles, or a particle gradation found in typical urban runoff (see performance section of this manual for more information).

The Rational Rainfall Method™

Differences in local climate, topography and scale make every site hydraulically unique. It is important to take these factors into consideration when estimating the long-term performance of any stormwater treatment system. The Rational Rainfall Method combines site-specific information with laboratory generated performance data, and local historical precipitation records to estimate removal efficiencies as accurately as possible.

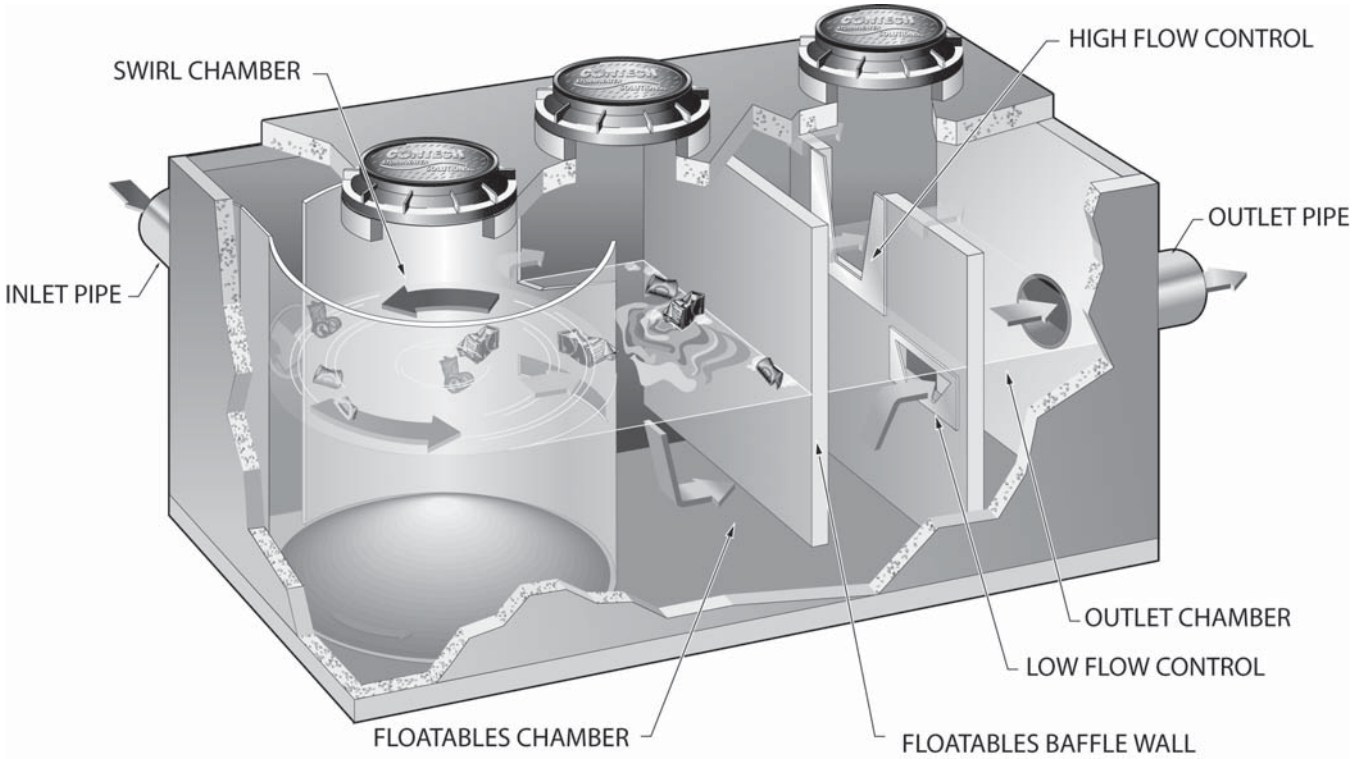

Short duration rain gauge records from across the United States and Canada were analyzed to determine the percent of the total annual rainfall that fell at a range of intensities. US stations' depths were totaled every 15 minutes or hourly and recorded in 0.01-inch increments. Depths were recorded hourly with 1-mm resolution at Canadian stations. One trend was consistent at all sites; the vast majority of precipitation fell at low intensities and high intensity storms contributed relatively little to the total annual depth.

These intensities, along with the total drainage area and runoff coefficient for each specific site, are translated into flow rates using the Rational Rainfall Method. Since most sites are relatively small and highly impervious, the Rational Rainfall Method is appropriate. Based on the runoff flow rates calculated for each intensity, operating rates within a proposed Vortechs system are determined. Performance efficiency curve determined from full scale laboratory tests on defined sediment PSDs is applied to calculate solids removal efficiency. The relative removal efficiency at each operating rate is added to produce a net annual pollutant removal efficiency estimate.

Once a system size is established, the internal elements of the system are designed based on information provided by the site engineer. Flow control sizes and shapes, sump depth, oil spill storage capacity, sediment storage volume and inlet and outlet orientation are determined for each system. In addition, bypass weir calculations are made for off-line systems.

Flow Control Calculations

Low Flow Control

The low flow control, or orifice, is typically sized to submerge the inlet pipe when the Vortechs system is operating at 20% of its treatment capacity. The orifice is typically a Cippoletti shaped aperture defined by its flat crest and sides which incline outwardly at a slope of 1 horizontal to 4 vertical.

$$Q_{orfice} = C_d \bullet A \bullet \sqrt{2gh}$$

Where:

$Q_{orifice}$ = flow through orifice, cfs (L/s)

C_d = orifice coefficient of discharge = 0.56 (based on lab tests)

A = orifice flow area, ft^2 (m^2) (calculated by orifice geometry)

h = design head, ft (m) (equal to the inlet pipe diameter)

g = acceleration due to gravity (32.2-ft/s^2 (9.81-m/s^2)

The minimum orifice crest length is 3-in (76-mm) and the minimum orifice height is 4-in (102-mm). If flow must be restricted beyond what can be provided by this size aperture, a Fluidic-Amp™ HydroBrake flow control will be used. The HydroBrake allows the minimum flow constriction to remain at 3-in (76-mm) or greater while further reducing flow due to its unique throttling action.

High Flow Control

The high flow control, or weir, is sized to pass the peak system capacity minus the peak orifice flow when the water surface elevation is at the top of the weir. This flow control is also a Cippoletti type weir.

The weir flow control is sized by solving for the crest length and head in the following equation:

$$Q_{weir} = C_d \bullet L \bullet (h)^{3/2}$$

Where:

Q_{weir} = flow through weir, cfs (L/s)

C_d = Cippoletti weir coefficient = 3.37 (based on lab testing)

h = available head, ft (m) (height of weir)

L = design weir crest length, ft (m)

Bypass Calculations

In most all cases, pollutant removal goals can be met without treating peak flow rates and it is most feasible to use a smaller Vortechs system configured with an external bypass. In such cases, a bypass design is recommended by CONTECH Stormwater Solutions for each off-line system. To calculate the bypass capacity, first subtract the system's treatment capacity from the peak conveyance capacity of the collection system (minimum of 10-year recurrence interval). The result is the flow rate that must be bypassed to avoid surcharging the Vortechs system. Then use the following arrangement of the Francis formula to calculate the depth of flow over the bypass weir.

$$H = (Q_{bypass} / (C_d \bullet L))^{2/3}$$

Where:

H = depth of flow over bypass weir crest, ft (m)

Q_{bypass} = required bypass flow, cfs (L/s)

C_d = discharge coefficient = 3.3 for rectangular weir

L = length of bypass weir crest, ft

The bypass weir crest elevation is then calculated to be the elevation at the top of the Cippoletti weir minus the depth of flow.

Hydraulic Capacity

In the event that the peak design flow from the site is exceeded, it is important that the Vortechs system is not a constriction to runoff leaving the site. Therefore, each system is designed with enough hydraulic capacity to pass the 100-year flow rate. It is important to note that at operating rates above 100-gpm/ft^2 (68-Lps/m^2) of the swirl chamber area (peak treatment capacity), captured pollutants may be lost.

When the system is operating at peak hydraulic capacity, water will be flowing through the gap over the top of the flow control wall as well as the orifice and the weir.

Performance

Full Scale Laboratory Test Results

Laboratory testing was conducted on a full scale Vortechs model 2000. The 150-μm curve demonstrates the results of tests using particles that passed through a 60-mesh sieve and were retained on a 100-mesh sieve. The 50-μm curve is based on tests of particles passing through a 200-mesh sieve and retained on a 400-mesh sieve (38-μm). A gradation with an average particle size (d50) of 80-μm, containing particles ranging from 38–500-μm in diameter was used to represent typical stormwater solids. (Table 1)

Particle Size Distribution (μm)	Percentage of Sample Make-Up
<63	42%
63 - 75	4%
75 - 100	9%
100 - 150	7%
150 - 250	11%
>250	27%

Table 1: Particle gradation of typical urban runoff used for efficiency curve

As shown, the Vortechs system maintains positive total suspended solids (TSS), defined by the tested gradations, removal efficiencies over the full range of operating rates. This allows the system to effectively treat all runoff from large, infrequent design storms, as well as runoff from more frequent low-intensity storms.

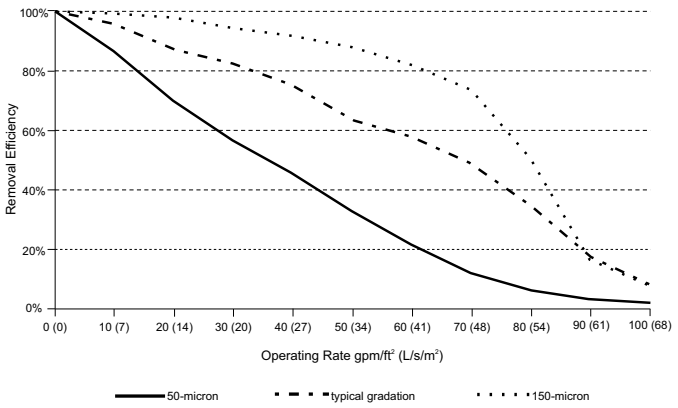

Figure 1: Vortechs model 2000 Removal Efficiencies

Typical Vortechs systems are designed to treat peak flows from 1.6-cfs (45-L/s) up to 30-cfs (850-L/s) online without the need for bypass. However, external bypasses can be configured to convey peak flows around the system if treatment capacity is exceeded. The system can also be configured to direct low flows from the last chamber of the system to polishing treatment when more stringent water quality standards are imposed. In all configurations, high removal efficiencies are achieved during the lower intensity storms, which constitute the majority of annual rainfall volume.

Full report available at www.contechstormwater.com.

Laboratory Testing

Full reports available at www.contechstormwater.com

Technical Bulletin 1: Removal Efficiencies for Selected Particle Gradations

Technical Bulletin 2: Particle Distribution of Sediments and the Effect on Heavy Metal Removal

Technical Bulletin 3: Sizing for Net Annual Sediment Removal

Technical Bulletin 3a: Determining Bypass Weir Elevation for Off-Line Systems

Technical Bulletin 4: Modeling Long Term Load Reduction: The Rational Rainfall Method

Technical Bulletin 5: Oil Removal Efficiency

Field Monitoring

Following are brief summaries of the field tests completed to date.

Full reports available at www.contechstormwater.com

DeLorme Mapping Company
Yarmouth, ME
CONTECH Stormwater Solutions

Prior to this premier field test of the Vortechs system, CONTECH developed an extensive body of laboratory data to document total suspended solids (TSS) removal efficiency. CONTECH performed this field study in order to compare the performance predicted using laboratory data to the performance of a correctly sized system in the field.

The study site was the headquarters of DeLorme Mapping in Yarmouth, Maine. The building, driveway, parking lot and ancillary facilities were constructed in 1996. A Vortechs model 11000 was installed to treat runoff from the 300-space, 4-acre (1.62-ha) parking lot.

Testing Period	May 1999 to Dec 1999
# of Storms Sampled	20
Mean Influent Concentration	328-mg/L
Mean Effluent Concentration	60-mg/L
Removal Efficiency	82%

The main purpose of the DeLorme study was to verify that the sizing methodology developed from our full-scale laboratory testing was valid and an accurate means of predicting field performance. The results of the study confirmed our sizing methodology.

Village Marine Drainage
Lake George, NY
New York State Department of Environmental Conservation, Division of Water

The New York State DEC used funds obtained in a Section 319 grant to initiate a study of the effectiveness of the Vortechs system to remove sediment and other pollutants transported

by stormwater to Lake George, Lake George Village, New York. "Since the 1970s, when there was a rapid increase in the rate and concentration of development along the southwestern shores of Lake George, we have been concerned about the impact of stormwater discharges into the lake," said Tracy West, co-author of the study.

Testing Period	Feb 2000 to Dec 2000
# of Storms Sampled	13
Mean Influent Concentration	801-mg/L
Mean Effluent Concentration	105-mg/L
Removal Efficiency	88%

The study concluded that the Village and Town of Lake George should consider installing additional Vortechs systems in areas where sedimentation and erosion have been identified as non-point source pollution problems.

Harding Township Rest Area
Harding Township, NJ
RTP Environmental Associates

This third party evaluation was performed under a U.S. Environmental Protection Agency grant, administered by the New Jersey Department of Environmental Protection. A. Roger Greenway, principal of RTP Environmental Associates, Inc., conducted the study in conjunction with Thonet Associates, which assisted with data analysis and helped develop best management practices (BMP) recommendations.

The Vortechs model 4000 was sized to handle a 100-year storm from the 3 acre (1.21 ha) paved parking area at the Harding Rest Stop, located off the northbound lane of I-287 in Harding Township, New Jersey.

Testing Period	May 1999 to Nov 2000
# of Storms Sampled	5
Mean Influent Concentration (TSS)	493-mg/L
Mean Effluent Concentration (TSS)	35-mg/L
Removal Efficiency (TSS)	93%
Mean Influent Concentration (TPH)	16-mg/L
Mean Effluent Concentration (TPH)	5-mg/L
Removal Efficienty (TPH)	67%

The study concluded that truck rest stops and similar parking areas would benefit from installing stormwater treatment systems to mitigate the water quality impacts associated with stormwater runoff from these sites.

Timothy Edwards Middle School
South Windsor, CT
UCONN Department of Civil & Environmental Engineering

This study of the Vortechs system was published as a thesis by Susan Mary Board, as part of the requirements for a Master of Science degree from the University of Connecticut. Her objective was to determine how well the Vortechs system retained pollutants from parking lot runoff, including total suspended solids (TSS), nutrients, metals, and petroleum hydrocarbons.

A Vortechs model 5000 was installed in 1998 to treat runoff from the 82-space parking lot of Timothy Edwards Middle School. The entire watershed was approximately 2 acres (0.81 ha), and was 80% impervious.

Testing Period	Jul 2000 to Apr 2001
# of Storms Sampled	weekly composite samples taken
Mean Influent Concentration	324-mg/L
Mean Effluent Concentration	73-mg/L
Removal Efficiency	77%

Additionally, the Vortechs system was particularly effective in removing zinc (85%), lead (46%), copper (56%), phosphorus (67%) and nitrate (54%).

The study concluded that the Vortechs system significantly reduced effluent concentrations of many pollutants in stormwater runoff.

Maintenance

The Vortechs system should be inspected at regular intervals and maintained when necessary to ensure optimum performance. The rate at which the system collects pollutants will depend more heavily on site activities than the size of the unit, e.g., unstable soils or heavy winter sanding will cause the swirl chamber to fill more quickly but regular sweeping will slow accumulation.

Inspection

Inspection is the key to effective maintenance and is easily performed. Pollutant deposition and transport may vary from year to year and regular inspections will help ensure that the system is cleaned out at the appropriate time. Inspections should be performed twice per year (i.e. spring and fall) however more frequent inspections may be necessary in equipment washdown areas and in climates where winter sanding operations may lead to rapid accumulations. It is useful and often required as part of a permit to keep a record of each inspection. A simple inspection and maintenance log form for doing so is provided on the following page, and is also available on contechstormwater.com.

The Vortechs system should be cleaned when inspection reveals that the sediment depth has accumulated to within 12 to 18 inches (300 to 450 mm) of the dry-weather water surface elevation. This determination can be made by taking two measurements with a stadia rod or similar measuring device; one measurement from the manhole opening to the top of the sediment pile and the other from the manhole opening to the water surface. Note: To avoid underestimating the volume of sediment in the chamber, the measuring device must be carefully lowered to the top of the sediment pile. Finer, silty particles at the top of the pile typically offer less resistance to the end of the rod than larger particles toward the bottom of the pile.

Cleaning

Cleaning of the Vortechs system should be done during dry weather conditions when no flow is entering the system. Clean-out of the Vortechs system with a vacuum truck is generally the most effective and convenient method of excavating pollutants from the system. If such a truck is not available, a "clamshell" grab may be used, but it is difficult to remove all accumulated pollutants using a "clamshell".

In installations where the risk of petroleum spills is small, liquid contaminants may not accumulate as quickly as sediment. However, an oil or gasoline spill should be cleaned out immediately. Motor oil and other hydrocarbons that accumulate on a more routine basis should be removed when an appreciable layer has been captured. To remove these pollutants, it may be preferable to use adsorbent pads to solidify the oil since these pads are usually much easier to remove from the unit individually and less expensive to dispose of than the oil/water emulsion that may be created by vacuuming the oily layer. Floating trash can be netted out if you wish to separate it from the other pollutants.

Cleaning of a Vortechs system is typically done by inserting a vacuum hose into the swirl chamber and evacuating this chamber of water and pollutants. As water is evacuated, the water level outside of the swirl chamber will drop to a level roughly equal to the crest of the lower aperture of the swirl chamber. The water outside the swirl chamber should remain near this level throughout pumping as the bottom and sides of the swirl chamber are sealed to the tank floor and walls. This "water lock" feature prevents water from migrating into the swirl chamber, exposing the bottom of the baffle wall and creating excess pump-out volume. Floating pollutants will decant into the swirl chamber as the water level is drawn down. This allows most floating material to be withdrawn from the same access point above the swirl chamber. Floating material that does not decant into the swirl chamber during draw down should be skimmed from the baffle chamber. If maintenance is not performed as recommended, sediment may accumulate outside the swirl chamber. If this is the case, it may be necessary to pump out other chambers. It is advisable to check for sediment accumulation in all chambers during inspection and maintenance.

These maintenance recommendations apply to all Vortechs systems with the following exceptions:

1. It is strongly recommended that when cleaning systems larger than the Model 16000 the baffle chamber be drawn down to depth of three feet prior to beginning clean-out of the swirl chamber. Drawing down this chamber prior to the swirl chamber reduces adverse structural forces pushing upstream on the swirl chamber once that chamber is empty.
2. Entry into a Vortechs system is generally not required as cleaning can be done from the ground surface. However, if manned entry into a system is required the entire system should be evacuated of water prior to entry regardless of the system size.

Manhole covers should be securely seated following cleaning activities to prevent leakage of runoff into the system from above and also to ensure proper safety precautions. If anyone physically enters the unit, Confined Space Entry procedures need to be followed.

Disposal of all material removed from the Vortechs system should be done in accordance with local regulations. In many locations, disposal of evacuated sediments may be handled in the same manner as disposal of sediments removed from catch basins or deep sump manholes. Check your local regulations for specific requirements on disposal.

For assistance with maintaining your Vortechs system, contact us regarding the CONTECH Maintenance Compliance Certification Program.

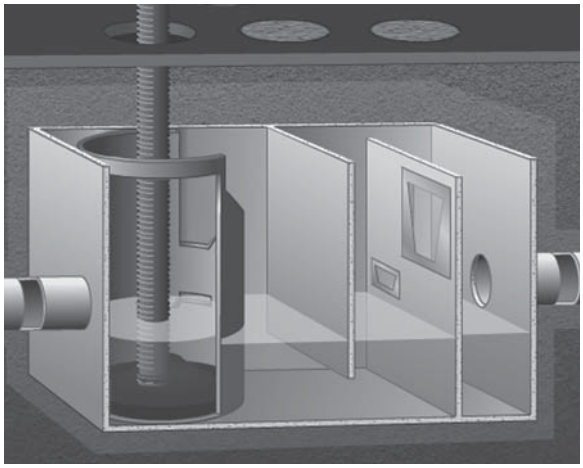

Vortechs Inspection & Maintenance Log

Vortech Model: _____ Location: _____

Date	Water depth to sediment[1]	Floatable Layer Thickness[2]	Describe Maintenance Performed	Maintenance Personnel	Comments

1. The water depth to sediment is determined by taking two measurements with a stadia rod: one measurement from the manhole opening to the top of the sediment pile and the other from the manhole opening to the water surface. If the difference between these measurements is less than eighteen inches the system should be cleaned out. **Note: To avoid underestimating the volume of sediment in the chamber, the measuring device must be carefully lowered to the top of the sediment pile.**

2. For optimum performance, the system should be cleaned out when the floating hydrocarbon layer accumulates to an appreciable thickness. In the event of an oil spill, the system should be cleaned immediately.

RECYCLED PAPER

CONTECH® STORMWATER SOLUTIONS™

800.925.5240
contechstormwater.com

Support

- Drawings and specifications are available at www.contechstormwater.com.
- Site-specific design support is available from our engineers.

©2008 CONTECH Stormwater Solutions

CONTECH Construction Products Inc. provides site solutions for the civil engineering industry. CONTECH's portfolio includes bridges, drainage, sanitary sewer, stormwater and earth stabilization products. For information on other CONTECH division offerings, visit contech-cpi.com or call 800.338.1122

Nothing in this catalog should be construed as an expressed warranty or an implied warranty of merchantability or fitness for any particular purpose. See the CONTECH standard quotation or acknowledgement for applicable warranties and other terms and conditions of sale.

The product(s) described may be protected by one or more of the following US patents: 5,322,629; 5,624,576; 5,707,527; 5,759,415; 5,788,848; 5,985,157; 6,027,639; 6,350,374; 6,406,218; 6,641,720; 6,511,595; 6,649,048; 6,991,114; 6,998,038; 7,186,058; 7,296,692; 7,297,266; related foreign patents or other patents pending.

vx_manual 03/08 3M

NOTE:
VORTECHS SYSTEMS INSTALLED IN A BYPASS CONFIGURATION REQUIRE AN UPSTREAM DIVERSION STRUCTURE THAT SHALL BE DETAILED BY THE CONSULTING ENGINEER WITH ELEVATION AND WEIR WIDTH DATA PROVIDED BY CONTECH STORMWATER SOLUTIONS.

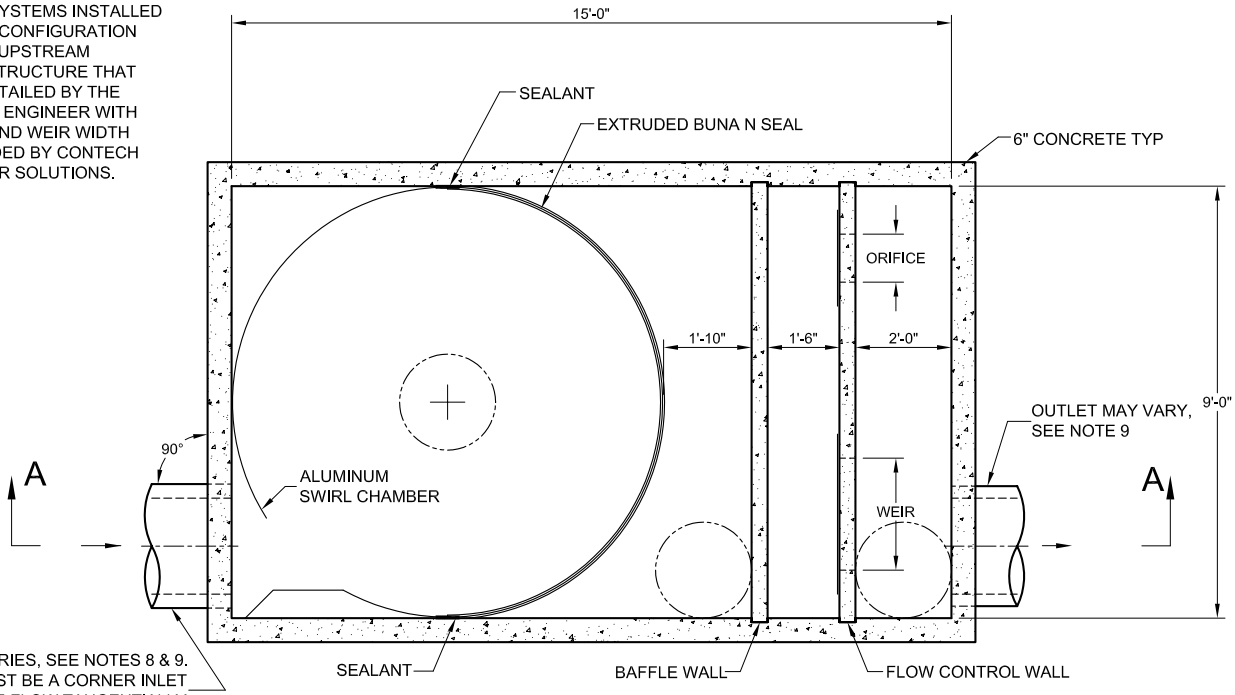

PLAN VIEW B - B

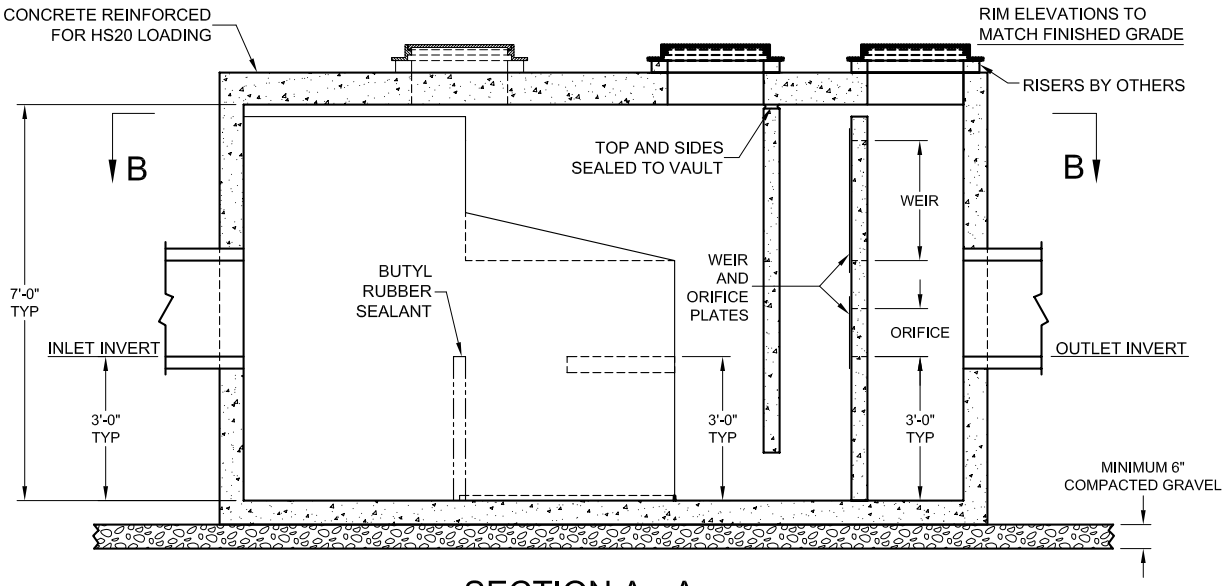

SECTION A - A

NOTES:
1. STORMWATER TREATMENT SYSTEM (SWTS) SHALL HAVE:
   PEAK TREATMENT CAPACITY: 14 CFS
   SEDIMENT STORAGE: 4.8 CU YD
   SEDIMENT CHAMBER DIA: 9' MIN
2. SWTS SHALL BE CONTAINED IN ONE RECTANGULAR STRUCTURE
3. SWTS REMOVAL EFFICIENCY SHALL BE DOCUMENTED BASED ON PARTICLE SIZE
4. SWTS SHALL RETAIN FLOATABLES AND TRAPPED SEDIMENT UP TO AND INCLUDING PEAK TREATMENT CAPACITY
5. SWTS INVERTS IN AND OUT ARE TYPICALLY AT THE SAME ELEVATION
6. SWTS SHALL NOT BE COMPROMISED BY EFFECTS OF DOWNSTREAM TAILWATER
7. SWTS SHALL HAVE NO INTERNAL COMPONENTS THAT OBSTRUCT MAINTENANCE ACCESS
8. INLET PIPE MUST BE PERPENDICULAR TO THE STRUCTURE
9. PIPE ORIENTATION MAY VARY; SEE SITE PLAN FOR SIZE AND LOCATION
10. PURCHASER SHALL NOT BE RESPONSIBLE FOR ASSEMBLY OF UNIT
11. MANHOLE FRAMES AND PERFORATED COVERS SUPPLIED WITH SYSTEM, NOT INSTALLED
12. PURCHASER TO PREPARE EXCAVATION AND PROVIDE CRANE FOR OFF-LOADING AND SETTING AT TIME OF DELIVERY
13. VORTECHS SYSTEMS BY CONTECH STORMWATER SOLUTIONS; PORTLAND, OR (800)548-4667; SCARBOROUGH, ME (877) 907-8676; ELKRIDGE, MD (866) 740-3318.

PROPRIETARY INFORMATION - NOT TO BE USED FOR CONSTRUCTION PURPOSES

This CADD file is for the purpose of specifying stormwater treatment equipment to be furnished by CONTECH Stormwater Solutions and may only be transferred to other documents exactly as provided by CONTECH Stormwater Solutions. Title block information, **excluding** the CONTECH Stormwater Solutions logo and the Vortechs Stormwater Treatment System designation and patent number, may be deleted if necessary. Revisions to any part of this CADD file without prior coordination with CONTECH Stormwater Solutions shall be considered unauthorized use of proprietary information.

CONTECH® STORMWATER SOLUTIONS INC.
contechstormwater.com

STANDARD DETAIL
STORMWATER TREATMENT SYSTEM
VORTECHS® MODEL 9000

U.S. PATENT No. 5,759,415

DATE: 4/5/06	SCALE: NONE	FILE NAME: STD9k	DRAWN: GMC	CHECKED: NDG

APPENDIX D

CONSTRUCTION PERIOD AND LONG TERM POLLUTION PREVENTION PLANS

i – Construction Period Pollution Prevention Plan

CONSTRUCTION PERIOD POLLUTION PREVENTION AND EROSION AND SEDIMENTATION CONTROL PLAN

The following erosion and sedimentation controls are for use during the construction phases of the proposed improvements as outlined in the Town Brook Base Flow Recapture Report located in the vicinity of Crown Colony Drive and Centre Street in Quincy, Massachusetts. Attached to this plan is a Construction Best Management Practices Maintenance Checklist for use during the demolition, earthwork, and construction phases of the project. This Construction Period Pollution Prevention and Erosion and Sedimentation Control Plan has been prepared in accordance with the Massachusetts Department of Environmental Protection (MassDEP) Stormwater Management Standards and the City of Quincy requirements.

Erosion and sedimentation controls shall be installed and maintained as identified on the Site Plans for the Town Brook Base Flow Restoration Improvement Plans in Quincy, Massachusetts submitted on April 17, 2013. Specifically, please refer to sheets C-5 through C-10.

Responsible Party for Plan Compliance:
Site Contractor to be determined after the conclusion of the Bid process.

Emergency Contact Information:
EBI Consulting, Inc. – Telephone: 781.273.2500

EROSION AND SEDIMENTATION CONTROLS

Erosion Control Barriers (Silt Sock or Straw Bales and Silt Fence)
Erosion Control Barriers shall be placed at the perimeter of the work area, at the toe of slope and as shown on the plans to prevent sediment laden surface runoff from leaving the Site. The barriers will be replaced as determined by periodic field inspections.

Catch Basin Inlet Protection
Newly constructed and existing catch basins will be protected with silt sacks (where appropriate) or hay bale barriers throughout construction.

Stabilized Construction Exit
A temporary stabilized construction exit will be constructed. A cross slope will be placed at the entrance to direct runoff to a protected catch basin inlet or settling area. If deemed necessary after construction begins, a wash pad may be included to wash off vehicle wheels before leaving the Site.

Maintenance

- The site contractor will be responsible for implementing each control indentified as part of this Construction Period Pollution Prevention and Erosion and Sedimentation Control Plan.
- The site contractor will be responsible for inspecting all sediment and erosion controls periodically and after each rainfall event. Records of the inspections shall be prepared and maintained on-site by the contractor.
- Damaged or deteriorated items will be repaired immediately after identification or at the direction of the owner's engineer of the City Engineer.
- The site contractor shall comply with the General Notes regarding Erosion Control as shown on the Site Plans.
- Silt shall be removed from behind barriers if greater than 6-inches deep or as needed.
- Sediment that is collected in structures shall be disposed of properly and covered if stored on-site.
- The stabilized construction entrances shall be inspected weekly. The entrances shall be maintained by adding additional clean, angular, durable stone to remove sediment from the tires of construction

vehicles when exiting the Site. Adjacent roadways shall be kept clean and swept as needed to avoid deposition of sediment as a result of construction traffic exiting the Site.

- Dust pollution shall be controlled using an on-site water source and/or an approved soil stabilization product.
- Erosion control structures shall remain in place until all disturbed earth has been securely stabilized. After removal of structures, disturbed areas shall be re-graded and stabilized as necessary.

ii – Construction Best Management Practices (BMP) Checklist

EBI Consulting
environmental | engineering | due diligence

Construction Best Management Practices Maintenance Checklist

Project Name: Town Brook Base Flow Recapture
Project Location: Centre Street, Quincy, MA
Project Number: 16120008

Date: 4/17/2013
Calculated By: MVG
Checked By: KPS

Best Management Practice	Inspection Frequency	Date Inspected	Inspector	Minimum Maintenance and Key Items to Check	Cleaning or Repair Needed (List Items if Required)	Date of Cleaning or Repair	Performed by
Catch Basin Inlet Protection (Silt Sack Sediment Trap)	Inspect at least once every 7 calendar days or once every 14 calendar days and within 24 hours of the occurrence of storm event of 0.25 inches or greater.			Inspect for proper operation. If clogged, remove accumulated sediment and properly dispose of to maintain the capacity of the catch basin.			
Erosion Control Barrier (Straw Bales and Silt Fence)	Inspect at least once every 7 calendar days or once every 14 calendar days and within 24 hours of the occurrence of storm event of 0.25 inches or greater.			Inspect for deterioration or failure. Remove sediment when buildup exceeds 6 inches or half the barrier height. The underside of straw bales should be kept in close contact with the earth and reset as necessary.			
Stabilized Construction Exit	Inspect at least once every 7 calendar days or once every 14 calendar days and within 24 hours of the occurrence of storm event of 0.25 inches or greater.			The exit shall be maintained in a condition that will prevent tracking of sediment onto public rights-of-way. The contractor shall sweep or wash pavement at exits which have experienced mud-tracking onto the pavement or traveled way. When wheel washing is required, it shall be done on an area stabilized with aggregate that drains into an approved sediment trapping device. When the construction exit becomes ineffective, the stone shall be removed along with the collected soil material and redistributed on-site in a stable manner. The exit should then be reconstructed. All sediment shall be prevented from entering storm drains, ditches, or waterways.			
Silt Sock Barrier	Inspect at least once every 7 calendar days or once every 14 calendar days and within 24 hours of the occurrence of storm event of 0.25 inches or greater.			Ensure that the filter sock is intact and the area behind the sock is not filled with sediment. If there is excessive ponding behind the filter sock or accumulated sediments reach the top of the sock, an additional sock should be added on top or in front of the existing filter sock without disturbing the soil or accumulated sediment. If the filter sock was overtopped during a storm event, the operator should install an additional filter sock on top of the original or place an additional filter sock further up the slope.			

Stormwater Supervisor Contact Information: _____

iii – Long term Pollution Prevention Plan

STORMWATER OPERATION AND MAINTENANCE (O&M) PLAN

The following Stormwater Operation and Maintenance (O&M) Plan is proposed to ensure the continued effectiveness of the stormwater management system as outlined in the Town Brook Base Flow Recapture Report located in the vicinity of Crown Colony Drive and Centre Street in Quincy, Massachusetts. Attached to this plan is a Stormwater Best Management Practices Maintenance Checklist for use during the long term operation and maintenance of the stormwater management system. This Stormwater O&M Plan has been prepared in accordance with the Massachusetts Department of Environmental Protection (MassDEP) Stormwater Management Standards and the City of Quincy requirements.

DESCRIPTION OF STORMWATER MAINTENANCE MEASURES

Low Flow Channel (located within the Crown Colony Stormwater Detention Basin)

- Inspect twice per year, typically in the spring and fall.
- Remove sediment, debris, and invasive vegetation. Clear outlets.

Deep Sump and Hooded Catch Basins (Centre Street – North)

- All catch basins shall be inspected a minimum of at least four times per year.
- Sediment, if more than two (2) feet deep, and/or floatable pollutants shall be pumped from the basin and disposed of at an approved offsite facility in accordance with all applicable regulations.
- Any structural damage or other indication of malfunction will be reported to the site manager and repaired as necessary.
- During cleanings, confirm the oil/debris trap (hood) is installed properly, is free of clogs, and is functional. Reinstall or replace as needed.
- During colder periods, the catch basin grates must be kept free of snow and ice.
- During warmer periods, the catch basin grates must be kept free of leaves, litter, sand, and debris.

Water Quality Structures and Diversion Manholes (Centre Street – North and South)

- See the attached Manufacturer's instructions on operation and maintenance requirements and methodology.
- Inspect and clean at least twice per year (spring and fall) or if sediment depth has accumulated to within 12 to 18 inches of the dry-weather water surface elevation. Inspections that are more frequent may be necessary in areas of rapid sediment accumulation; therefore, the maintenance cycle should be modified as needed for site-specific factors.
- Remove sediment and other trapped pollutants at the frequency or level specified by the manufacturer. No use of clamshell buckets without prior approval. Cleaning of the water quality system should be done during dry weather conditions when no flow is entering the system. Cleanout of the system with a vacuum truck is generally the most effective and convenient method of excavating pollutants from the system. Refer to manufacturer's Maintenance requirements for further detail.
- Diversion Manholes associated with each water quality unit to be inspected and cleaned concurrently with the maintenance of the water quality units.

Stormwater Outfall and Outlet Control Structures (72" Town Brook Open Channel Outfall & Crown Colony Stormwater Detention Basin 2 – Outlet Control Structures)

- Inspect once per year, typically in the spring.
- Inspect for washouts and repair if necessary.
- Remove vegetation and debris from blocking the outfall.

iv – Stormwater BMP Maintenance Checklist

EBI Consulting
environmental | engineering | due diligence

Stormwater Best Management Practices Maintenance Checklist

Project Name: Town Brook Base Flow Recapture
Project Location: Centre Street, Quincy, MA
Project Number: 16120008

Date: 4/17/2013
Calculated By: MVG
Checked By: KPS

Best Management Practice	Inspection Frequency*	Date Inspected*	Inspector	Minimum Maintenance and Key Items to Check	Cleaning or Repair Needed (List Items if Required)	Date of Cleaning or Repair	Performed by
Deep Sump and Hooded Catch Basins	Inspect four times per year. Clean four times per year, in the spring and fall, or whenever sediment buildup exceeds two (2) feet in depth.			**Inspect and clean all catch basins within 100 feet of the Centre Street Junction Structure.** Remove trash and deposits. During cleanings, confirm the oil/debris trap (hood) is installed properly, is free of clogs, and is functional. Reinstall or replace as needed. Take care not to damage the oil/debris trap (hood) during cleaning.			
Water Quality Units (WQU) and Diversion Manholes	Inspect and clean at least twice per year (spring and fall) or if sediment depth has accumulated to within 12 to 18 inches of the dry-weather water surface elevation. More frequent inspections may be necessary in areas of rapid sediment accumulation; therefore the maintenance cycle should be modified as needed for site specific factors.			Remove sediment and other trapped pollutants at the frequency or level specified by the manufacturer. No use of clamshell buckets without prior approval. Cleaning of the water quality system should be done during dry weather conditions when no flow is entering the system. Cleanout of the system with a vacuum truck is generally the most effective and convenient method of excavating pollutants from the system. Refer to manufacturer's Maintenance requirements for further detail. **WQU 1 (Centre Street North) - located immediately north of the Centre Street Junction Structure** **WQU 2 (Centre Street South) - located within Centre Street between Home Depot and the MBTA Station Diversion Manholes - located adjacent to each water quality unit with Centre Street**			
Stormwater Outfall & Outlet Control Structures	Inspect once per year, typically in the spring.			Inspect for washouts and repair if necessary. Remove vegetation and debris from blocking inlets and outlets. Remove accumulated sediment within drainage structures. **Stormwater Outfall - the 72-inch RCP outlet to the Town Brook open channel** **Stormwater Control Structure - Centre Street Junction Structure including the entire length of the 6.8-foot by 4-foot drainage culvert and directly upstream and downstream of the metal trough** **Outlet Control Structures - two outlet control structures located at the Crown Colony Stormwater Detention Basin along Crown Colony Drive**			
Low Flow Channel	Inspect twice per year, typically in the spring and fall.			Remove sediment debris and invasive vegetation. Clear outlets. **Low Flow Channel located within the Crown Colony Stormwater Detention Basin between the two existing outlet control structures.**			

*In accordance with the MOA, the O&M measures as described herein must be performed annually prior to February 15th of each year. The City shall provide written confirmation that O&M inspections and actions taken (as needed) have been performed by February 20th of each year.

Stormwater Supervisor Contact Information: _____

APPENDIX E
CONDITIONS, CERTIFICATIONS AND AGREEMENTS

i – Final Order of Conditions
ii – Water Quality Certification
iii – Memorandum of Agreement

i – Final Order of Conditions

Massachusetts Department of Environmental Protection
Bureau of Resource Protection - Wetlands
WPA Form 5 – Final Order of Conditions
Massachusetts Wetlands Protection Act M.G.L. c. 131, §40

MassDEP File Number:
59-1261

A. General Information

Important: When filling out forms on the computer, use only the tab key to move your cursor - do not use the return key.

1. From: Northeast Regional Office
Regional Office of the Department of Environmental Protection (MassDEP)

2. This issuance is for (check one): a. ☒ Final Order of Conditions b. ☐ Superseding Amended Order of Conditions

3. To: Applicant:

Dennis (a. First Name) Harrington (b. Last Name)
City of Quincy (c. Organization)
1305 Hancock Street (d. Mailing Address)
Quincy (e. City/Town) MA (f. State) 02169 (g. Zip Code)

4. Property Owner (if different from applicant):

Various – see Appendix A from Order of Conditions (a. First Name) (b. Last Name)
(c. Organization)
(d. Mailing Address)
(e. City/Town) (f. State) (g. Zip Code)

5. Project Location:

Town Brook through Quincy Center (a. Street Address) Quincy (b. City/Town)
See Appendix A from Order of Conditions (c. Assessors Map/Plat Number) (d. Parcel/Lot Number)
Latitude and Longitude, if known: 42d14m50s (e. Latitude) 71d00m05s (f. Longitude)

6. Property recorded at the Registry of Deeds for (attach additional information if more than one parcel):

Norfolk (a. County) (b. Certificate Number (if registered land))
See Appendix A from Order of Conditions (c. Book) (d. Page)

7. Dates: May 27, 2011 (a. Date Notice of Intent Filed) August 3, 2011 (b. Date Public Hearing Closed) August 9, 2011 (c. Date of OOC Issuance)

8. Final Approved Plans and Other Documents (attach additional plan or document references as needed):
See Special Condition #19

Massachusetts Department of Environmental Protection
Bureau of Resource Protection - Wetlands
WPA Form 5 – Final Order of Conditions
Massachusetts Wetlands Protection Act M.G.L. c. 131, §40

MassDEP File Number:

59-1261

b. Prepared By	c. Signed and Stamped by
d. Final Revision Date	e. Scale
f. Additional Plan or Document Title	g. Date

B. Findings

1. Findings pursuant to the Massachusetts Wetlands Protection Act:

   Following the review of the above-referenced Notice of Intent and based on the information provided in this application and presented at the public hearing, this Commission finds that the areas in which work is proposed is significant to the following interests of the Wetlands Protection Act. Check all that apply:

a. ☐ Public Water Supply b. ☐ Land Containing Shellfish c. ☒ Prevention of Pollution

d. ☐ Private Water Supply e. ☒ Fisheries f. ☒ Protection of Wildlife Habitat

g. ☐ Groundwater Supply h. ☒ Storm Damage Prevention i. ☒ Flood Control

2. This Commission hereby finds the project, as proposed, is: (check one of the following boxes)

Approved subject to:

a. ☒ the following conditions which are necessary in accordance with the performance standards set forth in the wetlands regulations. This Commission orders that all work shall be performed in accordance with the Notice of Intent referenced above, the following General Conditions, and any other special conditions attached to this Order. To the extent that the following conditions modify or differ from the plans, specifications, or other proposals submitted with the Notice of Intent, these conditions shall control.

Denied because:

b. ☐ the proposed work cannot be conditioned to meet the performance standards set forth in the wetland regulations. Therefore, work on this project may not go forward unless and until a new Notice of Intent is submitted which provides measures which are adequate to protect these interests, and a final Order of Conditions is issued. **A description of the performance standards which the proposed work cannot meet is attached to this Order.**

c. ☐ the information submitted by the applicant is not sufficient to describe the site, the work, or the effect of the work on the interests identified in the Wetlands Protection Act. Therefore, work on this project may not go forward unless and until a revised Notice of Intent is submitted which provides sufficient information and includes measures which are adequate to protect the Act's interests, and a final Order of Conditions is issued. **A description of the specific information which is lacking and why it is necessary is attached to this Order as per 310 CMR 10.05(6)(c).**

Inland Resource Area Impacts: Check all that apply below. (For Approvals Only)

3. ☐ Buffer Zone Impacts: Shortest distance between limit of project disturbance and wetland boundary (if available) _____ a. linear feet

Massachusetts Department of Environmental Protection
Bureau of Resource Protection - Wetlands
WPA Form 5 – Final Order of Conditions
Massachusetts Wetlands Protection Act M.G.L. c. 131, §40

MassDEP File Number:
59-1261

Resource Area	Proposed Alteration	Permitted Alteration	Proposed Replacement	Permitted Replacement
4. ☒ Bank	3,425 a. linear feet	3,425 b. linear feet	2,525 c. linear feet	2,525 d. linear feet
5. ☒ Bordering Vegetated Wetland	0 a. square feet	0 b. square feet	500 c. square feet	500 d. square feet
6. ☒ Land Under Waterbodies and Waterways	17,040 a. square feet	17,040 b. square feet	14,960 c. square feet	14,960 d. square feet
	e. c/y dredged	f. c/y dredged		

B. Findings (cont.)

Resource Area	Proposed Alteration	Permitted Alteration	Proposed Replacement	Permitted Replacement
7. ☐ Bordering Land Subject to Flooding	a. square feet	b. square feet	c. square feet	d. square feet
Cubic Feet Flood Storage	e. cubic feet	f. cubic feet	g. cubic feet	h. cubic feet
8. ☐ Isolated Land Subject to Flooding	a. square feet	b. square feet		
Cubic Feet Flood Storage	c. cubic feet	d. cubic feet	e. cubic feet	f. cubic feet
9. ☐ Riverfront area	a. total sq. feet	b. total sq. feet		
Sq ft within 100 ft	c. square feet	d. square feet	e. square feet	f. square feet
Sq ft between 100-200 ft	g. square feet	h. square feet	i. square feet	j. square feet

Coastal Resource Area Impacts: Check all that apply below. (For Approvals Only)

10. ☐ Designated Port Areas	Indicate size under Land Under the Ocean, below			
11. ☐ Land Under the Ocean	a. square feet	b. square feet		
	c. c/y dredged	d. c/y dredged		
12. ☐ Barrier Beaches	Indicate size under Coastal Beaches and/or Coastal Dunes below			
13. ☐ Coastal Beaches	a. square feet	b. square feet	c. c/y nourishmt.	d. c/y nourishmt.
14. ☐ Coastal Dunes	a. square feet	b. square feet	c. c/y nourishmt.	d. c/y nourishmt.
15. ☐ Coastal Banks	a. linear feet	b. linear feet		
16. ☐ Rocky Intertidal Shores	a. square feet	b. square feet		
17. ☐ Salt Marshes	a. square feet	b. square feet	c. square feet	d. square feet

18. ☐ Land Under Salt Ponds	a. square feet	b. square feet		
	c. c/y dredged	d. c/y dredged		
19. ☐ Land Containing Shellfish	a. square feet	b. square feet	c. square feet	d. square feet
20. ☒ Fish Runs	Indicate size under Coastal Banks, inland Bank, Land Under the Ocean, and/or inland Land Under Waterbodies and Waterways, above			
	a. c/y dredged	b. c/y dredged		
21. ☐ Land Subject to Coastal Storm Flowage	a. square feet	b. square feet		

C. General Conditions Under Massachusetts Wetlands Protection Act

(only applicable to approved projects)

1. Failure to comply with all conditions stated herein, and with all related statutes and other regulatory measures, shall be deemed cause to revoke or modify this Order.

2. The Order does not grant any property rights or any exclusive privileges; it does not authorize any injury to private property or invasion of private rights.

3. This Order does not relieve the permittee or any other person of the necessity of complying with all other applicable federal, state, or local statutes, ordinances, bylaws, or regulations.

4. The work authorized hereunder shall be completed within three years from the date of this Order unless either of the following apply:
   a. the work is a maintenance dredging project as provided for in the Act; or
   b. the time for completion has been extended to a specified date more than three years, but less than five years, from the date of issuance. If this Order is intended to be valid for more than three years, the extension date and the special circumstances warranting the extended time period are set forth as a special condition in this Order.

5. This Order may be extended by the issuing authority for one or more periods of up to three years each upon application to the issuing authority at least 30 days prior to the expiration date of the Order.

6. Any fill used in connection with this project shall be clean fill. Any fill shall contain no trash, refuse, rubbish, or debris, including but not limited to lumber, bricks, plaster, wire, lath, paper, cardboard, pipe, tires, ashes, refrigerators, motor vehicles, or parts of any of the foregoing.

7. This Order is not final until all administrative appeal periods from this Order have elapsed, or if such an appeal has been taken, until all proceedings before MassDEP have been completed.

8. No work shall be undertaken until the Order has become final and then has been recorded in the Registry of Deeds or the Land Court for the district in which the land is located, within the chain of title of the affected property. In the case of recorded land, the Final Order shall also be noted in the Registry's Grantor Index under the name of the owner of the land upon which the proposed work is to

be done. In the case of the registered land, the Final Order shall also be noted on the Land Court Certificate of Title of the owner of the land upon which the proposed work is done. The recording information shall be submitted to MassDEP on the form at the end of this Order, which form must be stamped by the Registry of Deeds, prior to the commencement of work.

9. A sign shall be displayed at the site not less then two square feet or more than three square feet in size bearing the words,

"Massachusetts Department of Environmental Protection" [or, "MassDEP"]

"File Number 59-1261"

C. General Conditions Under Massachusetts Wetlands Protection Act

10. Where the MassDEP is requested to issue a Superseding Order, the Conservation Commission shall be a party to all agency proceedings and hearings before MassDEP.

11. Upon completion of the work described herein, the applicant shall submit a Request for Certificate of Compliance (WPA Form 8A) to MassDEP.

12. The work shall conform to the plans and special conditions referenced in this order.

13. Any change to the plans identified in Condition #12 above shall require the applicant to inquire of MassDEP in writing whether the change is significant enough to require the filing of a new Notice of Intent.

14. The Agent or members of the Conservation Commission and MassDEP shall have the right to enter and inspect the area subject to this Order at reasonable hours to evaluate compliance with the conditions stated in this Order, and may require the submittal of any data deemed necessary by the Conservation Commission or MassDEP for that evaluation.

15. This Order of Conditions shall apply to any successor in interest or successor in control of the property subject to this Order and to any contractor or other person performing work conditioned by this Order.

16. Prior to the start of work, and if the project involves work adjacent to a Bordering Vegetated Wetland, the boundary of the wetland in the vicinity of the proposed work area shall be marked by wooden stakes or flagging. Once in place, the wetland boundary markers shall be maintained until a Certificate of Compliance has been issued by MassDEP.

17. All sedimentation barriers shall be maintained in good repair until all disturbed areas have been fully stabilized with vegetation or other means. At no time shall sediments be deposited in a wetland or water body. During construction, the applicant or his/her designee shall inspect the erosion controls on a daily basis and shall remove accumulated sediments as needed. The applicant shall immediately control any erosion problems that occur at the site and shall also immediately notify MassDEP, which reserves the right to require additional erosion and/or damage prevention controls it may deem necessary. Sedimentation barriers shall serve as the limit of work unless another limit of work line has been approved by this Order.

NOTICE OF STORMWATER CONTROL AND MAINTENANCE REQUIREMENTS

18. **The work associated with this Order (the "Project") is** (1) ☐ **is not** (2) ☒ **subject to the Massachusetts Stormwater Standards. If the work is subject to the Stormwater Standards, then the project is subject to the following conditions:**
a) All work, including site preparation, land disturbance, construction and redevelopment, shall be implemented in accordance with the construction period pollution prevention and erosion and sedimentation control plan and, if applicable, the Stormwater Pollution Prevention Plan required by the National Pollution Discharge Elimination System Construction General Permit as required by Stormwater Condition 8. Construction period erosion, sedimentation and pollution control measures and best management practices (BMPs) shall remain in place until the site is fully stabilized.

C. General Conditions Under Massachusetts Wetlands Protection Act (cont.)

b) No stormwater runoff may be discharged to the post-construction stormwater BMPs unless and until a Registered Professional Engineer provides a Certification that:
i. all construction period BMPs have been removed or will be removed by a date certain specified in the Certification. For any construction period BMPs intended to be converted to post construction operation for stormwater attenuation, recharge, and/or treatment, the conversion is allowed by the MassDEP Stormwater Handbook BMP specifications and that the BMP has been properly cleaned or prepared for post construction operation, including removal of all construction period sediment trapped in inlet and outlet control structures;
ii. as-built final construction BMP plans are included, signed and stamped by a Registered Professional Engineer, certifying the site is fully stabilized;
iii. any illicit discharges to the stormwater management system have been removed, as per the requirements of Stormwater Standard 10;
iv. all post-construction stormwater BMPs are installed in accordance with the plans (including all planting plans) approved by the issuing authority, and have been inspected to ensure that they are not damaged and that they are in proper working condition;
v. any vegetation associated with post-construction BMPs is suitably established to withstand erosion.

c) The landowner is responsible for BMP maintenance until the issuing authority is notified that another party has legally assumed responsibility for BMP maintenance. Prior to requesting a

Certificate of Compliance, or Partial Certificate of Compliance, the responsible party (defined in General Condition 18(e) shall execute and submit to the issuing authority an Operation and Maintenance Compliance Statement ("O&M Statement) for the Stormwater BMPs identifying the party responsible for implementing the stormwater BMPs Operation and Maintenance Plan ("O&M Plan") and certifying the following: *i.)* the O&M Plan is complete and will be implemented upon receipt of the Certificate of Compliance, and *ii.)* the future responsible parties shall be notified in writing of their ongoing legal responsibility to operate and maintain the stormwater management BMPs and implement the Stormwater Pollution Prevention Plan.

d) Post-construction pollution prevention and source control shall be implemented in accordance with the long-term pollution prevention plan section of the approved Stormwater Report and, if applicable, the Stormwater Pollution Prevention Plan required by the National Pollution Discharge Elimination System Multi-Sector General Permit.

e) Unless and until another party accepts responsibility, the landowner, or owner of any drainage easement, assumes responsibility for maintaining each BMP. To overcome this presumption, the landowner of the property must submit to the issuing authority a legally binding agreement of record, and acceptable to the issuing authority, evidencing that another entity has accepted responsibility for maintaining the BMP, and that the proposed responsible party shall be treated as a permittee for purposes of implementing the requirements of Conditions 18(f) through 18(k) with respect to that BMP. Any failure of the proposed responsible party to implement the requirements of Conditions 18(f) through 18(k) with respect to that BMP shall be a violation of the Order of Conditions or Certificate of Compliance. In the case of stormwater BMPs that are serving more than one lot, the legally binding agreement shall also identify the lots that will be serviced by the stormwater BMPs. A plan and easement deed that grants the responsible party access to perform the required operation and maintenance must be submitted along with the legally binding agreement.

f) The responsible party shall operate and maintain all stormwater BMPs in accordance with the design plans, the O&M Plan, and the requirements of the Massachusetts Stormwater Handbook.

C. General Conditions Under Massachusetts Wetlands Protection Act (cont.)

g) The responsible party shall:
1. Maintain an operation and maintenance log for the last three (3) consecutive calendar years of inspections, repairs, maintenance and/or replacement of the stormwater management system or any part thereof, and disposal (for disposal the log shall indicate the type of material and the disposal location);
2. Make the maintenance log available to MassDEP and the Conservation Commission ("Commission") upon request; and
3. Allow members and agents of the MassDEP and the Commission to enter and inspect the site to evaluate and ensure that the responsible party is in compliance with the requirements for each BMP established in the O&M Plan approved by the issuing authority.

h) All sediment or other contaminants removed from stormwater BMPs shall be disposed of in accordance with all applicable federal, state, and local laws and regulations.

i) Illicit discharges to the stormwater management system as defined in 310 CMR 10.04 are prohibited.

j) The stormwater management system approved in the Order of Conditions shall not be changed without the prior written approval of the issuing authority.

k) Areas designated as qualifying pervious areas for the purpose of the Low Impact Site Design Credit (as defined in the MassDEP Stormwater Handbook, Volume 3, Chapter 1, Low Impact Development Site Design Credits) shall not be altered without the prior written approval of the issuing authority.

l) Access for maintenance, repair, and/or replacement of BMPs shall not be withheld. Any fencing constructed around stormwater BMPs shall include access gates and shall be at least six inches above grade to allow for wildlife passage.

☒ **FOC** Special Conditions (see the attached sheet(s) for additional conditions numbered 19 thru 68.

Brief Description of Project:

The proposed project is for the realignment of 1700 linear feet of Town Brook in Quincy Center to a new 1200-linear-foot alignment adjacent along the south side of the Concourse Roadway.

FINAL ORDER OF CONDITIONS
DEP File Number 59-1261

Special Conditions

19. All work shall conform with the following plans, reports and special conditions:

    Plans titled: "Town Brook Enhancement Project, Notice of Intent, Quincy, MA." 26 sheets. Prepared by Stephenson Design Group, LLC and stamped by Karlis Skulte, P.E. #47765. Final revision date: July 27, 2011. Scale: as shown.

    Document entitled: "Preliminary Design of Flow Restoration in Town Brook, Quincy MA." Prepared by Gomez & Sullivan Engineers, P.C. Final Report dated March, 2011.

    Document entitled: "MassDEP 401 Water Quality Certification, USACOE 404 Category 2 Permit. Prepared by Stephenson Design Group, LLC, and Lucas Environmental, LLC. Dated September 23, 2011.

    Document entitled: "Request for Information, Town Brook Enhancement Project, DEP File #059-1261, Quincy, Massachusetts." 80 pages including attachments. Prepared by Stephenson Design Group, LLC. Dated November 21, 2011.

Pre-Construction:

20. A copy of this Superseding Order shall be included in all construction contracts and shall supersede any conflicting requirements.

21. No work shall commence on-site until all appeal periods have elapsed and this Superseding Order of Conditions has been recorded with the Registry of Deeds and the MassDEP has been formally notified via the form provided at the end of this Order.

22. Any proposed or executed change in the plans approved under this Superseding Order shall require the applicant to file a new Notice of Intent with the Quincy Conservation Commission or to inquire of the MassDEP in writing whether the change is substantial enough to require a new filing. A copy shall be sent at the same time to the Quincy Conservation Commission.

23. Erosion controls shall be placed on site between areas of proposed work and resource areas. Haybales and/or silt fence must be staked. Silt fencing must be entrenched. Alternative types of barriers (such as straw, coir, or Filter mitt) may be used with prior approval from MassDEP.

24. An adequate stockpile of erosion control materials shall be on site at all times for emergency or routine replacement and shall include materials to repair or replace silt fences, hay bales, stone riprap filter berms, or any other devices planned for use during construction.

25. The applicant shall employ an Environmental Monitor certified in Massachusetts as a Professional Engineer and with experience in stream construction techniques. This monitor will ensure that all work relating to placement of the geo-textile materials and construction of the low-flow channel, modified channel, resting areas, riffles, and bordering vegetated wetland island are constructed as designed and shall be given the authority to stop work in the event of non-compliance with this Final Order. This monitor shall report directly to Mass DEP and the Division of Marine Fisheries (DMF) on a bi-weekly basis. The name and address of this Monitor shall be provided to MassDEP and DMF prior to the start of work.

26. **Prior to construction on this site,** there shall be a pre-construction meeting between the project supervisor, the contractor responsible for the work, a member of the Quincy Conservation Commission or its Administrator, the Environmental Monitor and representatives of MassDEP and DMF to ensure that the requirements of this Superseding Order of Conditions are understood. Arrangements shall be made two weeks prior to any activity to arrange for the pre-construction meeting.

27. **Prior to construction on this site,** a plan with narrative shall be prepared describing the method for placing stone within both the cast-in-place and pre-cast sections of culvert. There shall be approval from DEP in writing prior to construction.

28. **Prior to the commencement of construction,** a dewatering plan shall be prepared and submitted to MassDEP for review and approval. There shall be approval from DEP in writing prior to construction.

29. All plans, reports, and information referenced in this Superseding Order of Conditions shall be provided to MassDEP and the Quincy Conservation Commission simultaneously.

Project Specific:

30. Unless otherwise allowed by DMF, there shall be no construction that results in a discharge of waters to the existing Town Brook smelt run between March 1st and May 31st.

31. The downstream connection point shall be constructed prior to the upstream tie-in point becoming functional. The upstream connection point shall be constructed after the approximately 1200 linear feet of new culvert and low-flow channel are completed.

32. The embedded material proposed within the culvert shall be set flush to the existing grade of the stream channel bottom at both the culvert outlet, such that there will be no physical barrier to fish passage.

33. Construction of the proposed project incorporating the elevated wall along Parcel 90 (Sheet C-4.3), and the "Alternate Work Plan" dated October 27, 2011, both prepared by Stephenson Design Group, may be implemented upon the written consent of the property owner of Parcel D90, upon an eminent domain taking, or as otherwise may be authorized in accordance with the laws of the Commonwealth. When property considerations are finalized, notice shall be provided to MassDEP and DMF.

34. A gravity-flow hydraulic connection, described in the Gomez and Sullivan Report as the Tunnel Intake Area Gravity Option, that will augment flow into Town Brook shall be constructed within the Tunnel Intake Area of the Burgin Conduit and the Town Brook channel by means of a concrete channel or the installation of a buried pipe connection. Flow to this new channel or pipe shall be controlled by water-tight stop logs in accordance with an operating plan approved by the United States Army Corps of Engineers (USACE), provided that the applicant may propose to incorporate automatic sluice gates in the design in lieu of one or more stop logs. Construction of the gravity flow connection may only occur upon receipt of all necessary approvals, including, but not limited to, approval of a request to modify the existing structure from the USACE. All permit and approval applications necessary to construct and operate the flow augmentation structure shall be filed prior to the completion of the construction of the realigned Town Brook channel.

35. The gravity flow connection described in Condition #34 shall be constructed and operational prior to the diversion of Town Brook into the realigned channel, provided that, if despite the good faith effort of the applicant, the final permits and approvals necessary to construct the flow augmentation structure described in Condition #34 are not obtained prior to the date that the new alignment is ready to receive flow from the Brook, then the gravity flow option

shall be constructed no later than six months from the date such final permits and approvals are obtained. Pending obtaining such final permits and approvals, Town Brook may be diverted into the new alignment channel upon completion of its construction in accordance with final approved plans.

36. In the event that the results of the Monitoring Program set forth in Special Condition #52 indicate that additional flow augmentation is required to improve habitat functions, and upon the written request of DMF, modification of the diversion weir, as described in the Gomez & Sullivan Report as the Centre Street Junction Gravity Option, shall be constructed no later than 6 months from the date that all necessary approvals are obtained, including, but not limited to, approval of a request to modify this structure from the USACE.

37. In order to facilitate compliance with the provisions of Special Conditions #34 and #36, the applicant, in conjunction with DMF and other necessary state agencies, shall be obligated to enter into a Memorandum of Agreement within 60 days of the issuance of a Final Order of Conditions that will address the permitting, design, construction, operational, and financial responsibilities of the parties to complete the improvements described in Special Conditions #34 and #36.

38. In the event that the applicant is not able to obtain the permits or approvals necessary to implement the gravity flow retrieval option, or modification of the diversion weir, if required, then the applicant shall notify MassDEP and DMF of its inability to secure said permits or approvals. MassDEP, in coordination with DMF, shall notify the applicant that a proposal for an alternative method of flow augmentation is required and shall establish timelines for submittal and implementation of this proposal to be submitted to MassDEP and DMF for review and approval.

39. A submittal of a Letter of Map Revision (LOMR) application shall be made to the Federal Emergency Management Agency (FEMA) by the City of Quincy with a copy to MassDEP, notifying FEMA of the proposed change in the location of Town Brook culvert and channel and, if applicable, any change in the extent of flooding during the 100-year flood event, or any change to the floodway. Application shall be made within four months of the discharge of flows within the new alignment.

40. If oil and/or hazardous materials (OHM) are identified during implementation of the project (including excavation, removal and/or disposal of contaminated soil, pumping/dewatering of contaminated groundwater, or working in contaminated media), notification pursuant to the MA Contingency Plan (310 CMR 40.0000) must be made to MassDEP. A Licensed Site Professional (LSP) may be retained to determine if notification is required and, if need be, render appropriate opinions. Construction of protocols and procedures should reflect the potential for discovery of OHM during the construction period and appropriate tests should be conducted, prior and during construction, for known or suspected contamination.

41. Illicit channel connections, including, but not limited to, those between Station17+00 and 18+00, shall be eliminated in accordance with 314 CMR 9.06(6)(a)(10).

42. Prior to the start of construction, final plans shall be provided to MassDEP and DMF for review and approval, including detail of the vertical transition point in proximity to the downstream limits of work at approximately Station 21+00 showing how a smoother vertical transition at the channel bottom may be implemented in this area to improve the conditions resulting from the existing channel failure in this location, to the extent practicable, and provided it can be demonstrated that no adverse channel design performance issues can be shown to result from this repair.

43. To further improve the exclusion of fish from the decommissioned channel, DMF may recommend modifications to the weir/baffle design, which shall be incorporated within the final plans to be submitted to MassDEP and DMF for review and approval.

44. Final plans regarding the bordering vegetated wetland plantings and enhanced shade tree plantings to the maximum extent practicable accounting for growth criteria and other relevant considerations shall be submitted to MassDEP for review and approval prior to construction. There shall be no work until approval is received in writing from DEP.

45. As stated in the 401 Water Quality Certification Application, the applicant shall prepare a Town Brook Watershed Master Plan addressing Quincy Center and surrounding neighborhoods adjacent to Town Brook and will coordinate this Master Plan with the developer of the Urban Revitalization District.

Stormwater:

46. The 12 existing point-source discharges shall be retrofitted with catch basin inserts as described in Attachment 1 of the November 21, 2011 Response to Request for Information cited in Special Condition #19 of this document.

47. Maintenance of these inserts shall be in accordance with the "Sample Maintenance Agreement" included in Attachment 1 of the November 21, 2011 Response to Request for Information cited in Special Condition #19 of this document. This shall be an on-going condition and shall be included in any Certificate of Compliance and shall not expire with the issuance of a Certificate of Compliance.

48. As part of the comprehensive stormwater management program currently under development in connection with the Quincy Center Redevelopment Project, any Best Management Practices (BMPs) implemented within the Concourse Roadway and/or project area as approved as part of this SOC may be upgraded or replaced by new BMPs provided that there are similar or equivalent TSS removal rates.

49. The Comprehensive Stormwater Management Plan for the Quincy Center Redevelopment Project must comply with the MA Stormwater Standards for all discharges to the existing or proposed Town Brook channel. This includes discharges through existing pipe outlets and new pipe outlets installed as part to the Town Brook Enhancement Project and the Concourse Roadway Improvement Project.

50. Stormwater from the Quincy Center Redevelopment Project shall be in compliance with the MA Stormwater Standards and shall be directed to Town Brook.

Monitoring:

51. A permanent staff gage shall be installed at the inside of the stream bend to assist in monitoring sediment accumulation. A gage or benchmark shall be placed along the outside of the stream bend to assist in monitoring for scour. The staff gage(s) should be installed so as to be visible from street level.

52. The bordering vegetated wetland (BVW) island shall be monitored by the Environmental Monitor or qualified designee for success of plantings as well as for scour or deposition of materials, including both sediments and debris. Failed plantings shall be replaced with similar species as approved by MassDEP. A monitoring report shall be submitted to DEP at the beginning and end of each growing season for three years and shall include recommendations for replacement, as required.

53. The applicant shall submit a proposal for a smelt monitoring study shall be submitted to DMF for review and approval. The study shall include three years of monitoring and shall incorporate 2-3 site visits per week between March 1st and May 31st of each monitoring year. The proposal shall include: (1) documentation of the spatial and temporal distribution of smelt eggs, (2) sediment accumulation, water depth, and velocity should be measured at each inspection at the daylighted spawning riffles, resting pools, and at the stream bend, and (3) water quality (including dissolved oxygen and temperature) and effectiveness of the fish exclusion barrier shall be monitored.

54. The applicant shall submit a channel monitoring plan in order to identify the development of any scour pools, perched conditions, invert drops or any other obstructions to fish passage, especially at the transition between the new section of channel and the existing channel just south of Revere Road. If any obstructions to fish passage are observed, a remedial action plan shall be submitted within 30 days of the identification of the obstruction that will avoid or reduce impacts to fish movement.

55. The applicant shall submit a remedial action proposal in the event that DMF concludes that the channel's design specifications are not met and, as a result, significant smelt egg mortality results. This remedial action proposal shall be submitted to MassDEP and DMF for review and approval within the time set forth in the notice to the applicant that a remedial action is required.

56. The structural integrity and capacity of the banks, including the wall on Parcel 90, and channel of both the realigned portion of Town Brook and the downstream portion of the brook within the project area, being intergral to protection of flood control, storm damage prevention and protection of fisheries, shall be maintained. This shall include, but is not limited to, maintenance of the channel bottom to address sedimentation, preservation of the spawning substrate, and prevention of any conditions that may serve as an obstruction to fish passage as long as the fish continue to return to Town Brook. In addition, all vegetative plantings shall be maintained. This on-going condition shall be included in any Certificate of Compliance and shall not expire with the issuance of a Certificate of Compliance.

57. Once achieved, flow augmentation shall be on-going to ensure protection of the fish run and spawning habitat. This on-going condition for protection of fisheries shall be included in any Certificate of Compliance and shall not expire with the issuance of a Certificate of Compliance.

Other:

58. An operation-and-maintenance (O&M) program shall be implemented as outlined in Appendix F of the 401 Water Quality Certification application. This shall be an on-going condition and shall be included in any Certificate of Compliance and shall not expire with the issuance of a Certificate of Compliance.

59. This O&M program shall reflect that removal of sediments will require prior consultation with MassDEP and MA DMF and shall specify equipment to be used in for removal of accumulated sediments.

60. At no time during or after construction shall fill or other materials be placed, slump into or fall beyond the limit of grading as shown on the plan. The applicant shall be responsible for inspecting and maintaining all slopes and shall immediately notify the MassDEP and the Quincy Conservation Commission if slumping, erosion or encroachment occurs.

61. During work on this project, there shall be no discharge or spillage of fuel, oil or other pollutants, including sediments, onto any part of the site. The applicant shall take all reasonable precautions to prevent the release of pollutants by ignorance, accident or vandalism.

62. A copy of the final Construction Storm Water Pollution Plan (SWPPP) shall be submitted to MassDEP and the Quincy Conservation Commission prior to construction.

63. The developer or contractor responsible for the project's completion shall be notified of, and understand, the requirements of this Superseding Order of Conditions. A copy of this Order shall be kept on-site while activities regulated by this Order are being performed.

64. If any unforeseen problems occur during construction, upon discovery, the applicant shall immediately notify MassDEP and the Quincy Conservation Commission, and a meeting shall be held to determine the corrective measures to be employed. The applicant shall then act to correct the problem using the corrective measures

agreed upon.

65. Upon stabilization of the site, all erosion controls shall be removed. A Certificate of Compliance will not be issued until all controls are removed.

66. Upon completion of this project, the applicant shall request a Certificate of Compliance from the MassDEP and shall submit the following information with the request:

    a. A written statement by a professional engineer or land surveyor registered in the Commonwealth of Massachusetts certifying compliance with the approved plans referenced above and this Superseding Order of Conditions and setting forth deviations, if any exits;
    b. An as-built site plan prepared by a registered land surveyor or registered professional engineer showing location and grades of the project.
    c. A final wetland replication report.

67. This Order shall apply to all successors or assigns in interest or control and any other party engaging in activity on the property identified in the Notice of Intent.

68. This Order of Conditions supersedes all prior Orders under DEP File #59-1261.

D. Findings Under Municipal Wetlands Bylaw or Ordinance

To the extent that the Order is based on a municipal bylaw or ordinance, and not on the Massachusetts Wetlands Protection Act or regulations, MassDEP has no jurisdiction to supersede the local bylaw order.

E. Issuance

This Order is valid for three years, unless otherwise specified as a special condition pursuant to General Conditions #4, from the date of issuance.

1.) Date of Issuance

The Final Order must be mailed by certified mail (return receipt requested) or hand delivered to the applicant. A copy also must be mailed or hand delivered at the same time to the appropriate Conservation Commission, appellant and the property owner, if different from the applicant.

Issued by the Massachusetts Department of Environmental Protection:

Signature:

Kenneth Kimmell, Commissioner

5/30/12

Date

This Order is issued to the applicant as follows:

☐ by hand delivery on

☒ by certified mail, return receipt requested, on

CERTIFIED MAIL Date May 30, 2012 #7003 3110 0001 6101 6905 ~~Date~~

G. Recording Information

This Order of Conditions must be recorded in the Registry of Deeds or the Land Court for the district in which the land is located, within the chain of title of the affected property. In the case of recorded land, the Final Order shall also be noted in the Registry's Grantor Index under the name of the owner of the land subject to the Order. In the case of registered land, this Order shall also be noted on the Land Court Certificate of Title of the owner of the land subject to the Order of Conditions. The recording information on this page shall be submitted to MassDEP listed below.

Regional Office of the Massachusetts Department of Environmental Protection

Detach on dotted line, have stamped by the Registry of Deeds and submit to MassDEP.

To:

Northeast Regional Office
Regional Office of the Department of Environmental Protection

Please be advised that the Order of Conditions for the Project at:

Town Brook, Quincy Center — Project Location
59-1261 — MassDEP File Number

Has been recorded at the Registry of Deeds of:

Norfolk — County
Book
Page

for:

Property Owner

and has been noted in the chain of title of the affected property in:

Book
Page

In accordance with the Order of Conditions issued on:

Date

If recorded land, the instrument number identifying this transaction is:

Instrument Number

If registered land, the document number identifying this transaction is:

Document Number

Signature of Applicant

ii – Water Quality Certification

MassDEP
Commonwealth of Massachusetts
Executive Office of Energy & Environmental Affairs

Department of Environmental Protection

Northeast Regional Office • 205B Lowell Street, Wilmington MA 01887 • 978-694-3200

DEVAL L. PATRICK
Governor

TIMOTHY P. MURRAY
Lieutenant Governor

RICHARD K. SULLIVAN JR.
Secretary

KENNETH L. KIMMELL
Commissioner

August 31, 2012

Dennis Harrington, Planning Director
City of Quincy
1305 Hancock Street
Quincy, MA 02169

Re: **Water Quality Certification – Town Brook Realignment**
BRP WW10, Major project certification

At: Town Brook through Quincy Center

DEP File #59-1261
DEP Transmittal #X239696
United States Army Corps of Engineers (USACOE) Permit # NAE-2010-1986

Dear Mr. Harrington:

The Massachusetts Department of Environmental Protection (MassDEP) has completed its review of your application for Water Quality Certification, as referenced above. In accordance with the provisions of MGL c.21, §§ 26-53 and Section 401 of the Federal Clean Water Act as amended (33 U.S.C. §1251 et seq.), it has been determined there is reasonable assurance the project or activity will be conducted in a manner which will not violate applicable water quality standards. A site visit for the project [see: 314 CMR 9.05 (4)] was conducted by MassDEP staff on September 11, 2011 and April 27, 2012 as part of a regulatory agency field inspection of the site.

The proposed project is for the realignment of Town Brook. Extensive historic alteration of Town Brook has resulted in the placement of the majority of the brook in culverts through the City. This project proposes to realign 1700 linear feet of the culverted river from Quincy Center to a new location paralleling a new concourse as part of the Quincy Center Urban Revitalization District Plan. This project is one of three Core Public Improvement projects that the City of Quincy is undertaking to upgrade the aged infrastructure within Quincy Center in order to facilitate redevelopment. The proposed new alignment will consist of 1200 linear feet of channel of which approximately 264 linear feet will be open channel.

This information is available in alternate format. Call Michelle Waters-Ekanem, Diversity Director, at 617-292-5751. TDD# 1-866-539-7622 or 1-617-574-6868
MassDEP Website: www.mass.gov/dep

Printed on Recycled Paper

The realignment of the brook will connect the proposed culvert to the existing culvert at a point upstream of Quincy Center. Flows will be conveyed from west to east along the south side of the Concourse Roadway which is currently under construction.

This application for Water Quality Certification proposes the filling of approximately 17,040 square feet of Waters of the United States, and specifically, Land Under Water. The regulations at 314 CMR 9.06(2) require mitigation for the permanent loss of this resource area.

Several features have been incorporated into the proposed project to provide mitigation. The realigned channel will provide approximately 171 linear feet of new open channel section. This open channel section will incorporate a low-flow channel with spawning substrate secured to the channel bottom. Additional linear footage of low-flow channel and spawning substrate is provided under Mechanic Street and both upgradient and downgradient of the open channel section. The low-flow channel is designed to achieve attraction velocities for smelt during low flows and includes resting pools to allow smelt to rest during spawning events. There will also be repairs to the existing channel bottom at the downstream limit of work to address an area of channel failure. This repair requires the replacement of the existing degraded channel walls and bottom with an eight-foot-wide monolithic reinforced concrete channel as an extension of the new channel section.

Wetland plantings are proposed within the open-channel section of Town Brook just upstream of the connection with the existing channel. The width of the channel in this location provides an opportunity to reduce velocities and create an "island" with an elevation just above base flow elevations. Approximately 500 square feet of wetland plantings are intended to mitigate temperatures within adjacent spawning riffles and resting pools.

Town Brook has been subject to significant diversion of flows as a result of local flood control projects, sedimentation and other development. The Deep Rock Tunnel Flood Control Project overflow diversion structure was constructed by the Army Corps of Engineers (ACOE) in 1998 to divert peak storm event flows so as to reduce localized flooding. During construction of this structure, the smelt run suffered acute impacts including egg mortality and spawning habitat loss. Subsequently, it was determined that the brook's base flows have decreased resulting in continuing chronic impacts to the smelt run due to sedimentation, algae accumulation, and reduced water depths and velocity. Maintaining appropriate base flows within Town Brook is a critical factor in sustaining the existing smelt habitat.

Accordingly, this Water Quality Certification, as well as the Final Order of Conditions for this project (DEP File #59-1261) requires that a draft Memorandum of Agreement be prepared between stakeholders and that flows to Town Brook be restored through one or more solutions described further in Conditions #19 through #22.

As mentioned previously, the Town Brook realignment project is one component of the Quincy Center Redevelopment project. Construction of stormwater infrastructure is part of this redevelopment project. The draft Environmental Impact Report (DEIR) for the New Quincy Center Redevelopment project includes a preliminary design that consolidates many of the existing outfalls in the former Town Brook alignment into a single discharge outfall at Revere Road, adjacent to the existing smelt spawning area. Groundwater flow from the existing MBTA Lift Station will also be directed to this discharge outfall. This lift station contributes a significant flow of approximately 1 cubic foot per second several times a day to Town Brook and effectively doubles the brook's base flows during low flow periods.

Though the stormwater improvements for the redevelopment project have not been included in the Water Quality Certification application for the realignment project, they may have an effect on Waters of the United States. Consequently, this Certification requires that plans be evaluated which introduce the MBTA Lift Station flows further upstream into the realigned section of Town Brook. This requirement is compatible with the recommendations of the DEIR Certificate issued by the Secretary of Energy and Environmental Affairs on June 22, 2012.

An alternatives analysis has been done in accordance with 314 CMR 9.00. Seven alternative brook alignments (A through G) were evaluated in the Water Quality Certification application. In addition, a no-build alternative and an alternative to re-build the culvert along its current alignment were also evaluated. In order to determine the preferred alternative, the nine alternatives were evaluated using ten metrics: flood control, cost, underground conflicts, property constraints, enhanced smelt fisheries habitat, construction schedule and phasing, environmental enhancements, code compliance, consistency with the Urban Revitalization District Plan, and open channel/public amenity. The preferred alignment was determined through this evaluation process.

The regulations at 314 CMR 9.06, require that: "No discharge of dredged or fill material shall be permitted unless appropriate and practicable steps have been taken which will minimize potential adverse impacts to the bordering or isolated vegetated wetlands or land under water, including a minimum of 1:1 restoration or replication of bordering or isolated vegetated wetlands. Minimization and mitigation of adverse impacts shall be required for the selected alternative and the ability to minimize and mitigate impacts may be a factor in the evaluation of alternatives." Mitigation of adverse impacts for this project will occur via implementation of the mitigation plan and narrative referenced in the special conditions. No comment letters were received during the public comment period.

The Criteria for Evaluating Proposed Discharge to Wetlands of the Regulations for the Water Quality Certification Program (the Regulations) require the submittal of information necessary for MassDEP to determine that the project complies with the Wetland Protection Act, minimizes individual and cumulative impacts, and complies with the Massachusetts Surface Water Quality Standards. This information has been provided and specific mitigating measures required by the Department are itemized below. Therefore, based upon information currently in the record, MassDEP grants a Water Quality Certification subject to the following conditions to maintain water quality, to minimize impact on the waters and wetlands, and to ensure compliance with appropriate state law.

1. This project could result in a violation of MassDEP's Water Quality Standards, 314 CMR 4.00. Therefore, reasonable care and diligence shall be taken to assure that the proposed activity will not violate Class B standards.

2. All activity shall conform to the following plans and documents:

    a. Application for Water Quality Certificate dated September 23, 2011, which includes: (i.) Transmittal Form #X239696, and (ii.) Notice of Intent and accompanying narrative filed with the Quincy Conservation Commission for DEP File #59-1269.

b. Plans entitled: "Town Brook Enhancement Project, Notice of Intent, Quincy, MA." 26 sheets. Prepared by Stephenson Design Group, LLC, and stamped by Karlis Skulte, P.E. #47765. Final revision date: July 27, 2011. Scale: as shown.

c. Plan entitled: "Channel Repair Plan Downstream Connection Point." One sheet. Prepared by Stephenson Design Group, LLC, and stamped by Karlis Skulte, P.E. #47765. Dated July 13, 2012.

d. Plan entitled: "Alternate Work Plan." One Sheet. Prepared by Stephenson Design Group, LLC, and dated October 27, 2011.

c. Document entitled: "Preliminary Design of Flow Restoration in Town Brook, Quincy MA." Prepared by Gomez & Sullivan Engineers, P.C. Final report dated March, 2011.

e. Document entitled: "Request for Information, Town Brook Enhancement Project, DEP File #059-1261, Quincy, Massachusetts." 80 pages including attachments. Prepared by Stephenson Design Group, LLC. Dated November 21, 2011.

f. Document entitled: Memorandum of Agreement by the City of Quincy, Massachusetts Department of Conservation and Recreation, the Division of Marine Fisheries and Street-Works Development, LLC for the Recapture of Base Stream Flows Within Town Brook including Exhibits A, B & C.

Pre-Construction:

3. All activity shall conform to the requirements set forth in the Final Order of Conditions issued by MassDEP on May 30, 2012, for DEP File #59-1269, unless otherwise specified herein.

4. The project proponent shall notify MassDEP and the Quincy Conservation Commission in writing, 48 hours before any activity commences on site.

5. Members and agents of MassDEP and the Quincy Conservation Commission shall have the right to enter and inspect the premises to evaluate compliance with the conditions stated in this Water Quality Certification. The project proponent shall submit any data MassDEP deems necessary for that evaluation.

6. Erosion controls shall be placed on site between areas of proposed work and resource areas. Haybales and/or silt fence must be staked. Silt fencing must be entrenched. Alternative types of barriers (such as straw, coir, or Filter mitt) may be used with prior approval from MassDEP.

7. An adequate stockpile of erosion control materials shall be on site at all times for emergency or routine replacement and shall include materials to repair or replace silt fences, hay bales, stone riprap filter berms, or any other devices planned for use during construction.

8. The applicant shall employ an Environmental Monitor certified in Massachusetts as a Professional Engineer and with experience in stream construction techniques. This monitor will ensure that all work relating to placement of the geo-textile materials and construction of the low-flow channel, modified channel, resting areas, riffles, and bordering vegetated wetland

island are constructed as designed and shall be given the authority to stop work in the event of non-compliance with this Water Quality Certification.

9. The Environmental Monitor shall report directly to MassDEP and the Division of Marine Fisheries (DMF) on a bi-weekly basis. The name and address of this Monitor shall be provided to MassDEP and DMF prior to the start of work.

10. **Prior to the commencement of construction,** there shall be a pre-construction meeting between the project supervisor, the contractor responsible for the work, a member of the Quincy Conservation Commission or its Administrator, the Environmental Monitor and representatives of MassDEP and DMF to ensure that the requirements of this Water Quality Certification are understood. Arrangements for the pre-construction meeting shall be made at least two weeks prior to any activity within jurisdictional areas.

11. **Prior to the commencement of construction,** a plan with narrative shall be prepared describing the method for placing stone within both the cast-in-place and pre-cast sections of culvert. Written approval from MassDEP is required prior to construction.

12. **Prior to the commencement of construction,** a dewatering plan shall be prepared and submitted to MassDEP for review and approval. Written approval from MassDEP is required prior to construction.

13. **Prior to installation of the low-flow channel,** the applicant shall schedule a site inspection with MassDEP and DMF. The purpose of this inspection is to confirm channel elevations and slope with the Environmental Monitor at the transition area between the proposed project and the existing channel to ensure that the slope in this area is suitable for smelt migration and is compatible with the upstream design slope.

14. All plans, reports, and information referenced in this Water Quality Certification shall be provided to MassDEP and the Quincy Conservation Commission simultaneously.

Project Specific:

15. Unless otherwise allowed by DMF, there shall be no construction that results in a discharge of waters to the existing Town Brook smelt run between March 1st and May 31st.

16. The downstream connection point shall be constructed prior to the upstream tie-in point becoming functional. The upstream connection point shall be constructed after the approximately 1200 linear feet of new culvert and low-flow channel are completed.

17. The embedded material proposed within the culvert shall be set flush to the existing grade of the stream channel bottom at both the culvert outlet, such that there will be no physical barrier to fish passage.

18. Construction of the proposed project incorporating the elevated wall along Parcel D90 (Sheet C-4.3), and the "Alternate Work Plan" dated October 27, 2011, both prepared by Stephenson Design Group, may be implemented upon the written consent of the property owner of Parcel D90, upon an eminent domain taking, or as otherwise may be authorized in accordance with the

laws of the Commonwealth. When property considerations are finalized, notice shall be provided to MassDEP and DMF.

19. A preliminary Town Brook Flow Restoration Alternatives report shall be prepared by December 31, 2012, and submitted to MassDEP, the MA Department of Conservation and Recreation (DCR), and DMF for review and approval. Alternatives to be evaluated may include, without limitation, modification of the Crown Colony detention basin outlet structure and/or modifications to the Centre Street Culvert and Junction Structure, removal of sediment impeding flow downstream of this structure, and survey of the channel of Town Brook from the Centre Street diversion structure to the Lowes parking lot. All permit and approval applications necessary to construct and operate the flow restoration alternative(s) shall be filed prior to the completion of the construction of the realigned Town Brook channel.

20. The flow restoration alternative(s) described in the flow restoration report required by Condition #19 shall be constructed and operational prior to the diversion of Town Brook into the realigned channel.

21. If, despite the good faith efforts of the applicant, the flow restoration alternative(s) are not operational prior to the diversion of Town Brook, then interim flow augmentation, as detailed in the final executed Memorandum of Agreement adopted by the parties in accordance with Special Condition #37 of the Final Order of Conditions for DEP File #59-1269 shall be implemented for the 2013 smelt spawning season.

22. In the event that the results of the Monitoring Program set forth in Condition # 44 indicate that additional flow augmentation is required to improve habitat functions, and upon the written request of DMF and approvals by the DCR and ACOE, modification of the diversion weir, as described in the Gomez & Sullivan Report as the Centre Street Junction Gravity Option, shall be designed and constructed no later than 6 months from the date that all necessary approvals are obtained, including, but not limited to, approval of a request to modify this structure from the ACOE.

23. If modification of the diversion weir is required, as described in Condition #22, then, within 30 days from receiving notice from MassDEP, the applicant, in conjunction with the necessary state agencies, shall be obligated to enter into a Memorandum of Agreement that will address the permitting, design construction operational, and financial responsibilities of the parties to complete the improvement described in Condition #22.

24. In the event that the applicant is not able to obtain the permits or approvals necessary to implement the flow restoration alternative(s) recommended by Condition #19 or modification of the diversion weir, if required, then the applicant shall notify MassDEP, DCR and DMF of its inability to secure said permits or approvals. MassDEP, in coordination with DCR and DMF, shall notify the applicant that a proposal for a non-structural alternative method of flow augmentation is required and shall establish timelines for submittal and implementation of this proposal to be submitted to MassDEP, DCR and DMF for review and approval.

25. Prior to the construction of stormwater infrastructure associated with the construction of the New Quincy Center Redevelopment Project, the applicant shall submit a water quality sampling protocol for review and approval by MassDEP and DMF for the purpose of determining whether

introduction of groundwater flow from the MBTA Lift Station can be tied into the realigned Town Brook without causing an adverse effect on the fish run and degradation of the smelt spawning substrate. If it is determined that the introduction of flow is approved, the applicant shall construct the tie-in as far upstream as practicable from the Revere Street outfall.

26. Plans showing the Revere Street discharge shall be submitted to MassDEP for review and approval prior to the construction of stormwater infrastructure associated with the construction of the New Quincy Center Redevelopment Project. Plans shall evaluate incorporation of velocity dissipation at the outfall.

27. Maintenance of sediments from those locations identified in the Site Inspection Report referenced in the Memorandum of Agreement shall be undertaken annually and documented in the Town Brook maintenance logbook, in accordance with the Memorandum of Agreement.

28. A permanent mark shall be placed on the Center Street outlet headwall at the same elevation as the overflow trough wall. This mark indicates that, if water at the outlet is above this mark, then water is bypassing Town Brook and maintenance of sediments shall be performed in accordance with the Memorandum of Agreement.

29. A submittal of a Letter of Map Revision (LOMR) application shall be made to the Federal Emergency Management Agency (FEMA) by the City of Quincy with a copy to MassDEP, notifying FEMA of the proposed change in the location of Town Brook culvert and channel and, if applicable, any change in the extent of flooding during the 100-year flood event, or any change to the floodway. Application shall be made within four months of the discharge of flows within the new alignment.

30. If oil and/or hazardous materials (OHM) are identified during implementation of the project (including excavation, removal and/or disposal of contaminated soil, pumping/dewatering of contaminated groundwater, or working in contaminated media), notification pursuant to the MA Contingency Plan (310 CMR 40.0000) must be made to MassDEP. A Licensed Site Professional (LSP) shall be retained to determine if notification is required and, if need be, render appropriate opinions. Construction protocols and procedures should reflect the potential for discovery of OHM during the construction period and appropriate tests should be conducted, prior and during construction, for known or suspected contamination.

31. Illicit channel connections, including, but not limited to, those between Station17+00 and 18+00, shall be eliminated in accordance with 314 CMR 9.06(6)(a)(10).

32. To further improve the exclusion of fish from the decommissioned channel and following review of monitoring results, DMF may recommend modifications to the weir/baffle design, which shall be incorporated within the final plans to be submitted to MassDEP and DMF for review and approval.

33. Final plans regarding the bordering vegetated wetland plantings and enhanced shade tree plantings to the maximum extent practicable accounting for growth criteria and other relevant considerations shall be submitted to MassDEP for review and approval prior to construction. There shall be no work until approval is received in writing from MassDEP.

34. As stated in the 401 Water Quality Certification Application, the applicant shall prepare a Town Brook Watershed Master Plan addressing Quincy Center and surrounding neighborhoods adjacent to Town Brook and will coordinate this Master Plan with the developer of the Urban Revitalization District.

Stormwater:

35. The 12 existing point-source discharges shall be retrofitted with catch basin inserts as described in Attachment 1 of the November 21, 2011 Response to Request for Information cited in Condition #2 of this document.

36. Maintenance of these inserts shall be in accordance with the "Sample Maintenance Agreement" included in Attachment 1 of the November 21, 2011 Response to Request for Information cited in Condition #2 of this document.

37. As part of the comprehensive stormwater management program currently under development in connection with the Quincy Center Redevelopment Project, any Best Management Practices (BMPs) implemented within the Concourse Roadway and/or project area as approved as part of the FOC may be upgraded or replaced by new BMPs provided that there are similar or equivalent TSS removal rates.

38. The Comprehensive Stormwater Management Plan for the Quincy Center Redevelopment Project must comply with the MA Stormwater Standards for all discharges to the existing or proposed Town Brook channel. This includes discharges through existing pipe outlets and new pipe outlets installed as part to the Town Brook Enhancement Project and the Concourse Roadway Improvement Project.

39. Stormwater generated from the Quincy Center Redevelopment Project shall comply with the MA Stormwater Standards and shall be directed to Town Brook.

Monitoring:

40. A permanent staff gage shall be installed at the inside of the stream bend to assist in monitoring sediment accumulation. A gage or benchmark shall be placed along the outside of the stream bend to assist in monitoring for scour. The staff gage(s) should be installed so as to be visible from street level.

41. The bordering vegetated wetland (BVW) island shall be monitored by the Environmental Monitor or qualified designee for success of plantings as well as for scour or deposition of materials, including both sediments and debris. Failed plantings shall be replaced with similar species as approved by MassDEP. A monitoring report shall be submitted to MassDEP at the beginning and end of each growing season for three years and shall include recommendations for replacement, as required.

42. The applicant shall submit a proposal for a smelt monitoring study to DMF for review and approval. The study shall include three years of monitoring and shall incorporate 2-3 site visits per week between March 1st and May 31st of each monitoring year. The proposal shall include: (1) documentation of the spatial and temporal distribution of smelt eggs, (2)

sediment accumulation, water depth, and velocity shall be measured at each inspection at the daylighted spawning riffles, resting pools, and at the stream bend, and (3) water quality (including dissolved oxygen and temperature) and effectiveness of the fish exclusion barrier shall be monitored.

43. The applicant shall submit a channel monitoring plan in order to identify the development of any scour pools, perched conditions, invert drops or any other obstructions to fish passage, especially at the transition between the new section of channel and the existing channel just south of Revere Road. If any obstructions to fish passage are observed, a remedial action plan shall be submitted to MassDEP and DMF within 30 days of the identification of the obstruction that will avoid or reduce impacts to fish movement.

44. The applicant shall submit a remedial action proposal in the event that DMF concludes that the channel's design specifications are not met and, as a result, significant smelt egg or adult mortality results. This remedial action proposal shall be submitted to MassDEP and DMF for review and approval within the time set forth in the notice to the applicant that a remedial action plan is required.

45. The structural integrity and capacity of the banks, including the wall on Parcel 90, and channel of both the realigned portion of Town Brook and the downstream portion of the brook within the project area, being intergral to protection of flood control, storm damage prevention and protection of fisheries, shall be maintained. This shall include, but is not limited to, maintenance of the channel bottom to address sedimentation, preservation of the spawning substrate, and prevention of any conditions that may serve as an obstruction to fish passage as long as the fish continue to return to Town Brook.. In addition, all vegetative plantings shall be maintained. This on-going condition shall be included in any Certificate of Compliance and shall not expire with the issuance of a Certificate of Compliance.

46. The applicant shall have an on-going responsibility to operate and maintain the approved flow augmentation alternatives consistent with their design in order to ensure protection of the fish run and spawning habitat.

Other:

47. An operation-and-maintenance (O&M) program shall be implemented as outlined in Appendix F of the 401 Water Quality Certification application.

48. This O&M program shall reflect that removal of sediments from the channel will require prior consultation with MassDEP and DMF and shall specify equipment to be used for removal of accumulated sediments.

49. At no time during or after construction shall fill or other materials be placed, slump or fall into Waters of the United States. The applicant shall be responsible for inspecting and maintaining all slopes and shall immediately notify the MassDEP if slumping, erosion or encroachment occurs.

50. During work on this project, there shall be no discharge or spillage of fuel, oil or other pollutants, including sediments, onto any part of the site. The applicant shall take all reasonable precautions to prevent the release of pollutants by ignorance, accident or vandalism.

51. A copy of the final Construction Storm Water Pollution Plan (SWPPP) shall be submitted to MassDEP and the Quincy Conservation Commission prior to construction.

52. The developer or contractor responsible for the project's completion shall be notified of, and understand, the requirements of this Water Quality Certification. A copy of this Order shall be kept on-site while activities regulated by this Order are being performed.

53. If any unforeseen problems occur during construction, upon discovery, the applicant shall immediately notify MassDEP and a meeting shall be held to determine the corrective measures to be employed. The applicant shall then act to correct the problem using the corrective measures agreed upon.

54. Upon stabilization of the site, all erosion controls shall be removed.

55. This Certification remains in effect for the same duration of the federal permit .

56. In the event that an appeal is filed, no activity may begin until a final decision is issued by MassDEP.

Failure to comply with this certification is grounds for enforcement, including civil and criminal penalties, under MGL c.21 §42, MGL c.21A §16, or other possible actions/penalties as authorized by the General Laws of the Commonwealth.

This Certification does not relieve the applicant of the obligation to comply with other appropriate state or federal statutes or regulations. This includes, but is not limited to, conditions of the individual permit from the U.S. Department of the Army.

Should you have any questions regarding this WQC, please contact Ms. Heidi Davis at (978) 694-3255.

Very truly yours,

Eric Worrall, Deputy Regional Director
Bureau of Resource Protection

Cc: Quincy Conservation Commission, 55 Sea Street, Quincy MA 02169

Dennis Harrington, Planning Director, City of Quincy, 1305 Hancock Street, Quincy MA 02169

Peter Tamm, Goulston & Storrs, 400 Atlantic Avenue, Boston MA 02110-3333

Karlis Skulte, Stephenson Design Group, LLC, 51 Sleeper Street, Suite 600, Boston MA 02210

Brad Chase, MA Division of Marine Fisheries, 1213 Purchase Street, 3rd Fl., New Bedford MA 02740

Kevin Kotelly, USACOE, 696 Virginia Road, Concord, MA 01742-2751

Paul DiPietro, MA Department of Conservation & Recreation, 251 Causeway Street, Suite 600 Boston MA 02114

Notice of Appeal rights

A) Appeal Rights and Time Limits

Certain persons shall have a right to request an adjudicatory hearing concerning certifications by the MassDEP when an application is required: (a) the applicant or property owner; (b) any person aggrieved by the decision who has submitted written comments during the public comment period; any ten (10) persons of the Commonwealth pursuant to M.G.L. c. 30A where a group member has submitted written comments during the public comment period; or (c) any governmental body or private organization with a mandate to protect the environment which has submitted written comments during the public comment period. Any person aggrieved, any ten (10) persons of the Commonwealth, or a governmental body or private organization with a mandate to protect the environment may appeal without having submitted written comments during the public comment period only when the claim is based on new substantive issues arising from material changes to the scope or impact of the activity and not apparent at the time of public notice. To request an adjudicatory hearing pursuant to M.G.L. chapter 30A section 10, a Notice of Claim must be made in writing provided that the request is made by certified mail or hand delivery to the MassDEP, with the appropriate filing fee specified within 310 CMR 4.10 along with a MassDEP Fee Transmittal Form within twenty-one (21) days from the date of issuance of this Certificate, and addressed to:

Case Administrator
Dept of Environmental Protection
One Winter Street- 2nd Floor
Boston, MA 02108

A copy of the request shall at the same time be sent by certified mail or hand delivery to the issuing office of the Wetlands and Waterways Program at:

MassDEP, Northeast Regional Office
205B Lowell Street
Wilmington, MA 01887

B) Contents of Hearing Request

A Notice of Claim for Adjudicatory Hearing shall comply with the MassDEP's Rules for Adjudicatory Proceedings, 310 CMR 1.01 (6), and shall contain the following information pursuant to 314 CMR 9.10(3):

a. the 401 Certification Transmittal Number and MassDEP Wetlands Protection Act File Number;
b. the complete name of the applicant and address of the project;
c. the complete name, address, and fax and telephone numbers of the party filing the request, and, if represented by counsel or other representative, the name, fax, and telephone number of the attorney;
d. if claiming to be a party aggrieved, the specific facts that demonstrate that the party satisfies the definition of "aggrieved person" found at 314 CMR 9.02;
e. a clear and concise statement that an adjudicatory hearing is being requested;
f. a clear and concise statement of (1) the facts which are grounds for the proceedings, (2) the objections to the Certificate, including specifically the manner in which it is alleged to be inconsistent with the MassDEP's Water Quality Regulations, 314 CMR 9.00, and (3) the relief

sought through the adjudicatory hearing, including specifically the changes desired in the final written Certification, and

g. a statement that a copy of the request has been sent by certified mail or hand delivery to the applicant, the owner (if different from the applicant), the conservation commission of the city or town where the activity will occur, the Department of Conservation and Recreation (when the certificate concerns projects in Areas of Critical Environmental Concern), the public or private water supplier where the project is located (when the certificate concerns projects in Outstanding Resource Waters), and any other entity with responsibility for the resource where the project is located.

C) Filing Fee and Address

The hearing request along with a MassDEP Fee Transmittal Form and a valid check or money order payable to the Commonwealth of Massachusetts in the amount of one hundred dollars ($100) must be mailed to:

Commonwealth of Massachusetts
Department of Environmental Protection
Commonwealth Master Lockbox
P.O. Box 4062
Boston, MA 02211

The request will be dismissed if the filing fee is not paid, unless the applicant is exempt or granted a waiver. The filing fee is not required if the appellant is a city or town (or municipal agency), county, or district of the Commonwealth of Massachusetts, or a municipal housing authority. The MassDEP may waive the adjudicatory hearing filing fee pursuant to 310 CMR 4.06 (2) for a person who shows that paying the fee will create an undue financial hardship. A person seeking a waiver must file an affidavit setting forth the facts believed to support the claim of undue financial hardship together with the hearing request as provided above.

iii – Memorandum of Agreement

MEMORANDUM OF AGREEMENT

by the

CITY OF QUINCY, the MASSACHUSETTS DEPARTMENT OF CONSERVATION AND RECREATION, the DIVISION OF MARINE FISHERIES and STREET-WORKS DEVELOPMENT LLC;

for the

RECAPTURE OF BASE STREAM FLOWS WITHIN TOWN BROOK

I. Parties

This Memorandum of Agreement ("MOA") is made as of this 25th day of September 2012 (the "Effective Date") by the City of Quincy ("City") and joined by the Massachusetts Department of Conservation and Recreation ("DCR"), the Division of Marine Fisheries ("DMF") and Street-Works Development LLC ("Street-Works"), each for the limited purposes set forth herein. For purposes of this MOA, the City, DCR, DMF and Street-Works shall be known, collectively, as the "Parties". This MOA is entered into by the Parties with a common goal to recapture substantially all diverted base flows and restore them to Town Brook, to the extent such activities do not compromise flood control and are consistent with existing agreements among the U.S Army Corps of Engineers ("USACE"), DCR and the City, in accordance with the requirements of a Final Order of Conditions (the "FOC") issued on May 30, 2012 by the Massachusetts Department of Environmental Protection ("DEP") (DEP File No. 59-1261) allowing the City to undertake certain improvements to Town Brook in Quincy, Massachusetts (the "Town Brook Enhancement Project").

II. Post-FOC Issuance Flow Augmentation Study

Following the issuance of the FOC for the Town Brook Enhancement Project, consultation between the Parties has led DCR and the City to undertake further study to identify specific conditions within Town Brook in the vicinity of the Centre Street Junction Structure that may be contributing to the diversion of base flows into the Burgin Parkway stormwater system. This further evaluation was initiated based on the agreement of the Parties to further evaluate alternatives to those suggested in the report entitled "Preliminary Design of Flow Restoration in Town Brook, Quincy, MA" prepared by Gomez and Sullivan Engineers, P.C. in March 2011 for DMF (the "Preliminary Design Report"), in order to avoid structural modifications that: (i) may adversely affect the flood control purposes for which the complex series of structures designed by the USACE, with participation from the Metropolitan District Commission (the predecessor to the DCR), were constructed in the 1990s to address historic flooding problems in the downtown Quincy area (the "Flood Control Project"); (ii) result in burdensome, ongoing maintenance or operational obligations; and/or (iii) present significant reoccurring or future capital costs to maintain or replace costly pumps or other equipment. The goal of this further study was to identify and evaluate possible alternative design

modifications and other potential measures that could augment base flows to Town Brook without compromising flood protection or implicating maintenance and operational concerns with respect to the Flood Control Project. Accordingly, the City's consulting engineer, in conjunction with DCR and DEP, undertook site inspections in July 2012 to research and identify those locations where base flows are diverted from Town Brook. These findings are summarized in a report from Stephenson Design Group dated as of August 7, 2012 (the 'Site Inspection Report"), which is incorporated herein by reference and attached as **Exhibit A.**

The Site Inspection Report identifies two locations where base flows were found to be diverted from Town Brook and that, with the implementation of design modifications, can be expected to result in the recapture of these "lost" flows. Based upon initial investigation, potential modifications in these locations appear possible to recapture base flows to Town Brook, without the need for significant structural modifications to the structures comprising the Flood Control Project that might otherwise present flooding, maintenance, or operational concerns. The two locations identified in the Site Inspection Report are:

1. The constructed wetland ("Crown Colony Meadow"), constructed as part of the Crown Colony Office Park in the late 1980's/early 1990's; and
2. The Centre Street Junction Structure, constructed as part of the Centre Street Culvert in 1984, as most recently modified in 1999.

At both of these locations, the Site Inspection Report indicates that low flows were observed to be present within culverts discharging to the Burgin Parkway stormwater system (flow which is therefore bypassing Town Brook). This finding is consistent with the findings of DMF as noted in the March 7, 2007 Smelt Conservation Team Meeting Summary provided in the Preliminary Design Report, where it is noted that the gains in dry weather flows in Town Brook will depend on recapturing the chronic flow losses from the Crown Colony development.

Also, the Site Inspection Report notes that a significant buildup of sediment was found to be present in the Centre Street Junction Structure that is resulting in a backwater effect within the structure, backing up the flow and unnecessarily diverting flow to the Burgin Parkway stormwater system, rather than continuing in Town Brook. In addition to the sediment accumulation within the Centre Street Junction Structure, the open channel reaches of Town Brook immediately downstream of the Centre Street Junction Structure are overgrown and appear to contain additional sediment accumulation that is likely contributing to the backwater effect resulting in unnecessary flow diversions within the Centre Street Junction Box. This finding is consistent with the findings of DMF noted in the Smelt Conservation Team Meeting Summary, which indicates that, at that time, the sediment removal and maintenance efforts of the City's Department of Public Works ("DPW") in the open channel reaches of Town Brook downstream of the Centre Street Junction Box resulted in a significant reduction in dry weather flow diversions at the Centre Street Junction Box.

The Site Inspection Report notes that flow rates attributable to these diverted flows have not been quantified, however, it is also noted that the presence of flows within these various reaches of the stormwater system bypassing Town Brook is strongly indicative that, with

modification, these diverted flows can be recaptured within Town Brook, thereby augmenting base flows within the existing and newly established fish run downstream.

III. Purpose and Scope of the MOA

A. Purpose

The purpose of this MOA is to document the agreement of the Parties (i) on a course of action for the City to finalize, permit, fund and implement a scope of work intended to recapture certain previously diverted base flows in Town Brook in accordance with Special Conditions #37 and #38 of the FOC, (ii) to establish objective monitoring criteria and (iii) to identify specific responsibilities of the Parties in order to fund and carry out this work.

B. Scope

Unless otherwise specified herein, this MOA applies only to improvements intended to recapture base flows within Town Brook in a limited course of the channel upstream of the so-called Tunnel Intake Area. Except as expressly provided for herein, this MOA does not otherwise change, amend, supersede, or alter the existing, or as amended from time to time, statutory or regulatory authority of any party or the terms and conditions of the FOC.

IV. Terms of the MOA

NOW, THEREFORE, for the reasons set forth above, the City, as joined by DCR, DEP, DMF and Street-Works for the limited purposes set forth herein, agree as follows:

A. Scope of Work:

1. Design Modifications: The City, subject to coordination and approval by DCR and USACE, as applicable, shall undertake the monitoring of low flows, any necessary survey work to document existing conditions, initial design, and if such monitoring and design indicate it to be feasible, the City shall, in accordance with Special Condition #38 of the FOC, undertake the final design, obtain any necessary property rights/ permits and construct modifications at both Crown Colony Meadow and the Centre Street Junction Structure as identified in the Site Inspection Report, in order to recapture substantially all of the base flows that are currently diverted away from Town Brook at these locations, provided any such modifications can be demonstrated to have no material adverse impact on flood control. Additionally, the City shall evaluate, in connection with the advancement of the separate New Quincy Center redevelopment project, the potential to divert flows tributary to Town Brook originating from the MBTA lift station at Granite Street, including its potential contribution to augment base flows in the newly constructed spawning habitat section of Town Brook and the feasibility of such diversion. All monitoring, study and work shall be undertaken in accordance with the initial schedule in **Exhibit B** attached

hereto and made a part hereof. Material deviations resulting in delay in implementing the actions set forth in the schedule shall only be permitted by written approval of DEP.

2. Maintenance: In order to minimize the hydrologic effects of the buildup of sediment at key locations within Town Brook identified in the Site Inspection Report that have been shown to impair low flows by causing backwatering and a diversion of base flows from Town Brook, the City shall undertake an annual clean-out/removal of any deposited sediments in these locations prior to February 15th, each year, unless such deadline may be adjusted with the consent of DEP to take into account the severity of winter conditions and otherwise in accordance with the terms of the Operations and Maintenance Manual for the Town Brook Local Protection Project. Promptly following the performance of such annual maintenance, the City shall provide DCR, DEP and DMF written notice confirming this maintenance has been performed. An initial clean-out at locations agreed upon by DCR shall be undertaken by the City in the Fall of 2012 and then on an annual basis commencing prior to February 15, 2013, in accordance with the terms of this paragraph. Should the City fail to provide such written confirmation by February 20th each year, DEP may (but shall have no obligation) after providing reasonable notice to the City, contract with a private maintenance service provider to have this maintenance performed, with the City liable for such reasonable costs.

3. Monitoring: Upon completion of both (i) design modifications in accordance with the Scope of Work and (ii) the initial round of annual maintenance responsibilities under this MOA to remove the buildup of sediment at the locations set forth above, the City, in coordination with DCR, shall undertake an expanded scope of post-construction monitoring as set forth in the FOC, to include monitoring of flows at these locations for the spawning season immediately following the implementation of the design modifications. Should (a) the results of this monitoring confirm that by the completion of these design modifications and maintenance, all previously documented diverted base flows at these locations have been substantially recaptured within Town Brook, and (b) after the review of the third and final monitoring report as set forth in Special Condition 52 of the FOC, either (i) DMF does not request modification to the diversion weir as set forth in Special Condition 36 of the FOC, (ii) DMF requests this modification but DCR responds in writing that no such modification within the structure shall be permitted, or (iii) such modifications to the diversion weir are requested, approved and constructed in accordance with the terms of the FOC, then the City's obligations with respect to implementing structural modifications within Town Brook for flow augmentation shall be fully satisfied.

B. Interim Flow Augmentation Measures:

As reflected in the schedule set forth in **Exhibit B**, due to design, permitting and public bidding considerations, the structural design modifications being evaluated are not anticipated to be completed in advance of the Spring 2013 smelt spawning season identified as March 1 – May 31, (the "2013 Season"). Accordingly, if necessary, the City shall develop, for approval by DCR, DEP, DMF and, as applicable, the USACE, an interim flow augmentation protocol (the "Interim Protocol") in order to temporarily raise base flows within Town Brook during the Spring 2013 period of smelt spawning. The

Interim Protocol shall detail temporary measures that may include (a) releases from the Quincy Reservoir Dam, in coordination with the Town of Braintree and other necessary parties, that may require temporary modification to the so-called "low flow protocol" as set forth in the Operation and Maintenance Manual of the Town Brook Local Protection Project; (b) installation of temporary pumps at key locations to recapture otherwise diverted base flows and pump these flows into Town Brook; (c) pre/post survey of conditions in connection with the sediment removal activities prescribed by section IV.A.2., above; and/or (d) other measures that may be reasonably anticipated to augment the base flows to the newly-constructed smelt habitat in Town Brook during the 2013 Season. The Interim Protocol shall detail the means, methods and procedures required to implement these measures, which shall be submitted to DEP, DCR and DMF for approval no later than January 1, 2013. Upon prompt review by DEP and DMF, any comments on the proposed Interim Protocol shall be incorporated in order to finalize the Interim Protocol. The City agrees that the measures agreed to in the Interim Protocol shall be able to be operational on March 1, 2013, unless a later date has been authorized by DMF. The agreed-upon Interim Measures shall be operational through June 1, 2013, unless DMF agrees to a shorter period, based upon performance of these measures. The Interim Protocol shall not be required to be implemented should the structural design modifications and maintenance contemplated hereunder be completed prior to March 1, 2013.

C. Funding:

Funding for the construction of the improvements set forth herein shall be provided by the sources and applicable Parties, as may be necessary, in the order of priority as set forth in **Exhibit C** attached hereto and made a part hereof. The final Scope of Work shall ensure the approved improvements may be constructed based upon the level of funding available under this MOA.

D. Cooperation:

The Parties agree to cooperate with each other reasonably, actively and in good faith to effectuate the provisions of this MOA. For these purposes, the Parties hereby initially appoint the following as their Authorized Representatives:

- City:

  Dennis Harrington, Planning Director
  Quincy City Hall
  1305 Hancock Street
  Quincy, MA 02169

- DCR:

  Chief Engineer
  Department of Conservation and Recreation
  251 Causeway Street, Suite 900
  Boston, MA 02114-2104

with a copy to:

Michael Altieri, Assistant General Counsel
Department of Conservation and Recreation
251 Causeway Street, Suite 900
Boston, MA 02114-2104

- DMF:

  Bradford C. Chase, Aquatic Biologist III
  Diadromous Fish Biology and Mgt. Project
  Massachusetts Division of Marine Fisheries
  1213 Purchase Street, 3rd Floor
  New Bedford, MA 02740

- Street-Works:

  Stephen J. Chrusciel, Director, Construction Services
  Street-Works Development LLC
  30 Glenn Street, Suite 400
  White Plains, NY 10603

E. Time of the Essence:

Time is of the essence in this MOA. It is the intent of the Parties that all reasonable efforts be made to ensure that the provisions of this MOA are implemented in a timely and cooperative manner. Except as expressly set forth in this MOA, the FOC and all of the terms, conditions and provisions thereof, shall remain unaltered and unmodified and in full force and effect.

F. Notices:

All notices or other communications required or permitted to be given under this MOA shall be in writing signed by a duly authorized representative of the Parties, and shall be deemed delivered if: (i) mailed, postage prepaid, by regular U.S. Mail, to the persons and addresses above, or (ii) delivered by hand or by recognized overnight delivery service (with evidence of receipt) to the principal office of the intended party, as indicated above, unless such address is otherwise designated by written notice to the other Party, with copy of any such communication to:

- DEP:

  Heidi Davis, Environmental Analyst
  MassDEP Northeast Regional Office
  205B Lowell Street
  Wilmington, MA 01887

G. Amendments:

This MOA, or any part thereof, may be amended from time to time in a writing duly authorized and executed by the Parties.

H. Effective Date and Termination:

This MOA shall be effective as of the date first set forth above, and shall automatically terminate upon completion of the following: (i) the improvements set forth herein and (ii) the cessation of the Monitoring Program, all as evidenced by the issuance of a Certificate of Compliance under the Massachusetts Wetlands Protection Act (M.G.L. c. 131, §40) for the Town Brook Enhancement Project.

I. Binding Effect:

The provisions of this MOA shall be binding upon, and shall inure to the benefit of, the successors and assigns of the Parties.

J. Severability:

If any provision of this MOA is determined to be invalid or unenforceable, the remaining provisions shall remain in force and unaffected to the fullest extent permitted by law and regulation.

K. Counterparts:

This MOA may be executed in one or more counterparts, each which shall be deemed an original and all of which, when taken together, shall be deemed to be one agreement.

[Signatures appear on following page(s)]

Executed as a sealed instrument by the duly authorized representatives of each of the Parties to this MOA as of the day first set forth above.

CITY OF QUINCY:

Thomas P. Koch, Mayor

As joined by the DEPARTMENT OF CONSERVATION AND RECREATION for purposes of acknowledging that it has care and control, on behalf of the Commonwealth, of lands or interest in land, and appurtenant works, upon which the City of Quincy seeks to implement the Purposes of this MOA:

DEPARTMENT OF CONSERVATION AND RECREATION:

_____

Edward M. Lambert, Jr., Commissioner

As joined by the DIVISION OF MARINE FISHERIES for purposes of acknowledging this MOA and its monitoring and approval responsibilities set forth herein:

DIVISION OF MARINE FISHERIES:

Paul J. Diodati, Director

As joined by STREET-WORKS DEVELOPMENT LLC for the sole purpose of acknowledging its pledge as set forth in **Exhibit C**:

Stephen J. Chrusciel, Director, Construction Services

Executed as a sealed instrument by the duly authorized representatives of each of the Parties to this MOA as of the day first set forth above.

CITY OF QUINCY:

_____

Thomas P. Koch, Mayor

As joined by the DEPARTMENT OF CONSERVATION AND RECREATION for purposes of acknowledging that it has care and control, on behalf of the Commonwealth, of lands or interest in land, and appurtenant works, upon which the City of Quincy seeks to implement the Purposes of this MOA:

DEPARTMENT OF CONSERVATION AND RECREATION:

_____

Edward M. Lambert, Jr., Commissioner

As joined by the DIVISION OF MARINE FISHERIES for purposes of acknowledging this MOA and its monitoring and approval responsibilities set forth herein:

DIVISION OF MARINE FISHERIES:

_____

Paul J. Diodati, Director

As joined by STREET-WORKS DEVELOPMENT LLC for the sole purpose of acknowledging its pledge as set forth in **Exhibit C**:

_____

Stephen J. Chrusciel, Director, Construction Services