THIS PLAN HAS BEEN CALCULATED FROM INSTRUMENT SURVEY AND FROM RECORD INFORMATION ONLY. THE ABSCENCE OR EXACTNESS OF UTILITIES IS NEITHER INTENDED OR IMPLIED. THE CONTRACTOR TO FIELD VERIFY EXACT LOCATIONS OF ALL UTILITIES.

CONTRACTOR TO NOTIFY DIG-SAFE (1-888-DIG-SAFE) AT LEAST 72 HOURS PRIOR TO CONSTRUCTION.

I HEREBY CERTIFY THAT THE BUILDING SHOWN HEREON IS ACTUALLY FIELD LOCATED BY INSTRUMENT SURVEY, CONFORMED TO THE ZONING BYLAWS OF QUINCY , MA.

BRUCE P. EATON, P.L.S.
REG. LAND SURVEYOR

DATE

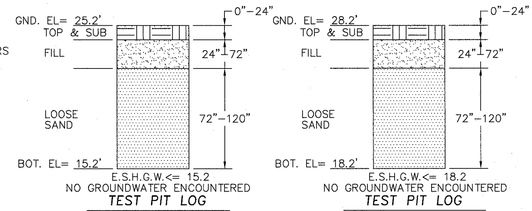

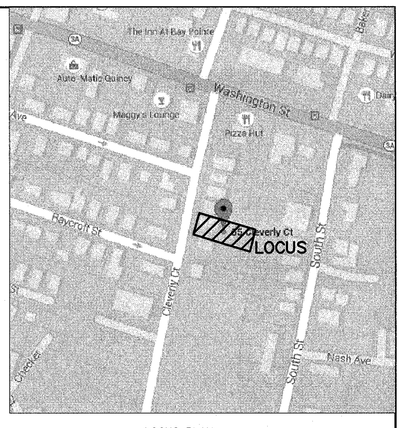

LOCUS PLAN
(N.T.S.)

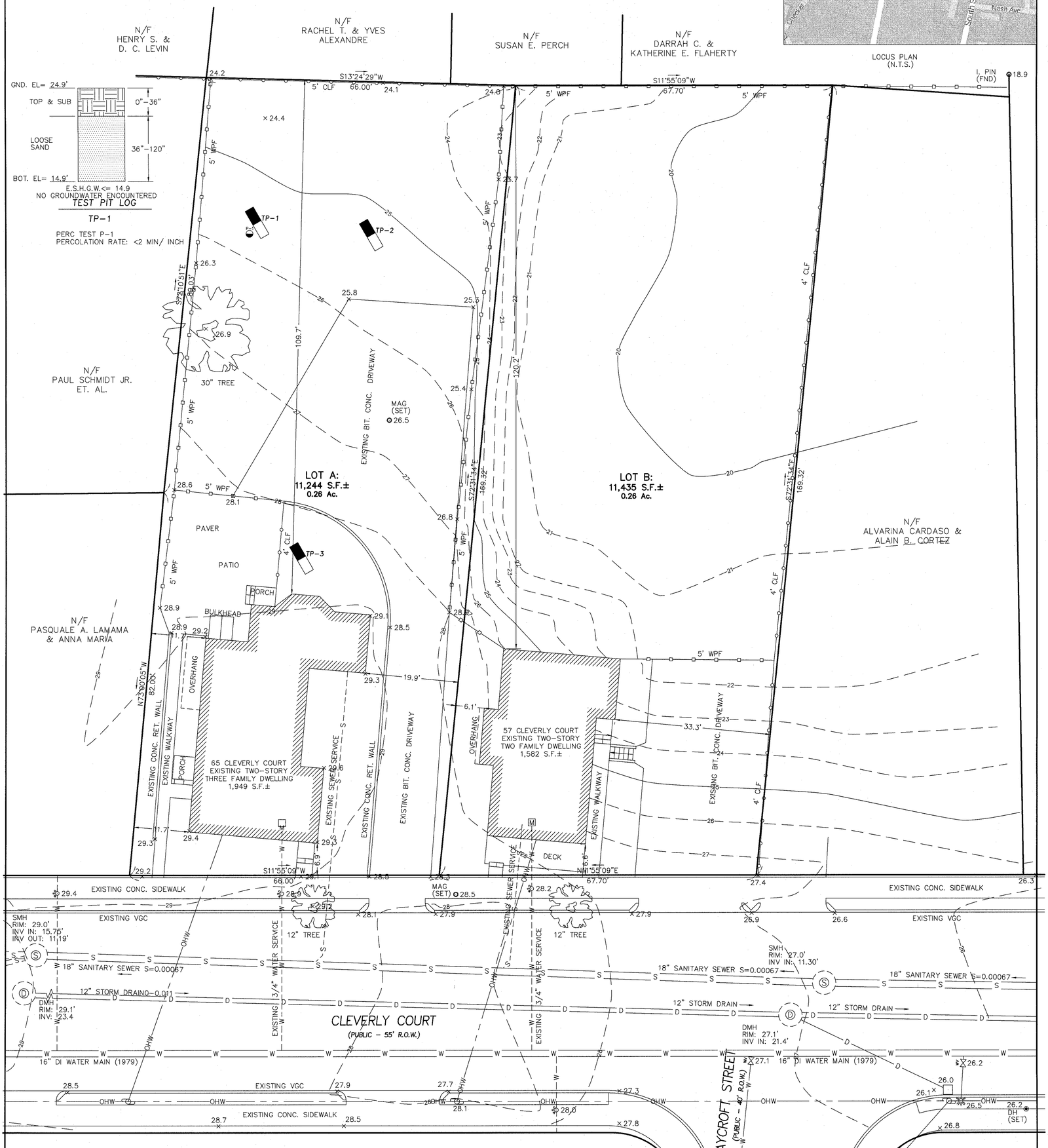

PLAN 361 PC. 1372-J

APPROVAL UNDER ZONING REGULATION BYLAWS REQUIRED

CITY OF QUINCY
PLANNING BOARD

GRAPHIC SCALE

(IN FEET)
1 inch = 10 ft.

ZONING:

		REQ'D	65 CLEVERLY
DISTRICT		BUS. B	-
MAX. F.A.R.		1.5	0.28
MIN. LOT AREA		5,000 S.F.	11,244 S.F.
SETBACKS	F	15 FT.	6.9 FT.
	S	15 FT.	11.7 FT.
	R	20 FT.	109.7 FT.
MIN. FRONTAGE		60 FT.	66.0 FT
MIN. LOT WIDTH		60 FT.	65.7 FT.
OPEN SPACE PER D.U.		NONE	3,292 S.F.
MAX. # OF STORIES		4	1.75

COMMONWEALTH OF MASSACHUSETTS
FREDERICK J. GEIBEL
No. 38954
REGISTERED PROFESSIONAL ENGINEER

COMMONWEALTH OF MASSACHUSETTS
BRUCE P. EATON
No. 7384
REGISTERED PROFESSIONAL LAND SURVEYOR

Bruce P. Eaton

REFERENCES:

ASSESSORS PLAN 2068
NORFOLK REGISTRY BK. 17730 PG. 580
" " BK. 17969 PG. 379
" " BK. 18804 PG. 204
" " BK. 32774 PG. 251
" " PL. 361 PG. 1372-J
" " PL. 894 PG. 626
" " PL. 1067 PG. 67
" " PL. 1389 PG. 174
" " PL. 1621 PG. 17
QUINCY DPW SEWER PL. 313
" " DRAIN PL. 501-D
" " ENGINEERING NB. 179 PG. 46-47
" " " NB. XXX PG. 135
" " " NB. XXX PG. 173

OWNER:
MICHAEL GREHAN

EXISTING CONDITIONS SITE PLAN
65 CLEVERLY COURT
QUINCY, MA
FOR
MICHAEL GREHAN

CIVIL ENVIRONMENTAL CONSULTANTS
8 OAK STREET PEABODY, MA 01960 978-531-1191

SHEET NO: 1 OF 3

DATE: 2/23/2015 JOB: 3337
REV: 6/4/2015, 11/30/2015
DRAWN BY: C.R.L.

THIS PLAN HAS BEEN CALCULATED FROM INSTRUMENT SURVEY AND FROM RECORD INFORMATION ONLY. THE ABSCENCE OR EXACTNESS OF UTILITIES IS NEITHER INTENDED OR IMPLIED. THE CONTRACTOR TO FIELD VERIFY EXACT LOCATIONS OF ALL UTILITIES.

CONTRACTOR TO NOTIFY DIG-SAFE (1-888-DIG-SAFE) AT LEAST 72 HOURS PRIOR TO CONSTRUCTION.

ZONING:

EXISTING	REQ'D	65 CLEVERLY
DISTRICT	BUS. B	–
MAX. F.A.R.	1.5	0.28
MIN. LOT AREA	5,000 S.F.	11,244 S.F.
SETBACKS F	15 FT.	6.9 FT.
SETBACKS S	15 FT.	11.7 FT.
SETBACKS R	20 FT.	109.7 FT.
MIN. FRONTAGE	60 FT.	66.0 FT
MIN. LOT WIDTH	60 FT.	65.7 FT.
OPEN SPACE PER D.U.	NONE	3,292 S.F.
MAX. # OF STORIES	4	1.75

PROPOSED	REQ'D	65 CLEVERLY
DISTRICT	RES C FOR RESIDENTIAL USE IN BUSINESS B ZONE	
MAX. F.A.R.	1.0	0.87
MIN. LOT AREA	14,000 S.F.	11,244 S.F.
SETBACKS F	25 FT.	16.6 FT.
SETBACKS S	25 FT.	10.1 FT.
SETBACKS R	25 FT.	25.0 FT.
MIN. FRONTAGE	100 FT.	66.0 FT
MIN. LOT WIDTH	100 FT.	65.7 FT.
OPEN SPACE PER D.U.	400(2,000 REQ)	600 S.F. PER D.U.(3,000 TOTAL)
MAX. # OF STORIES	6	3

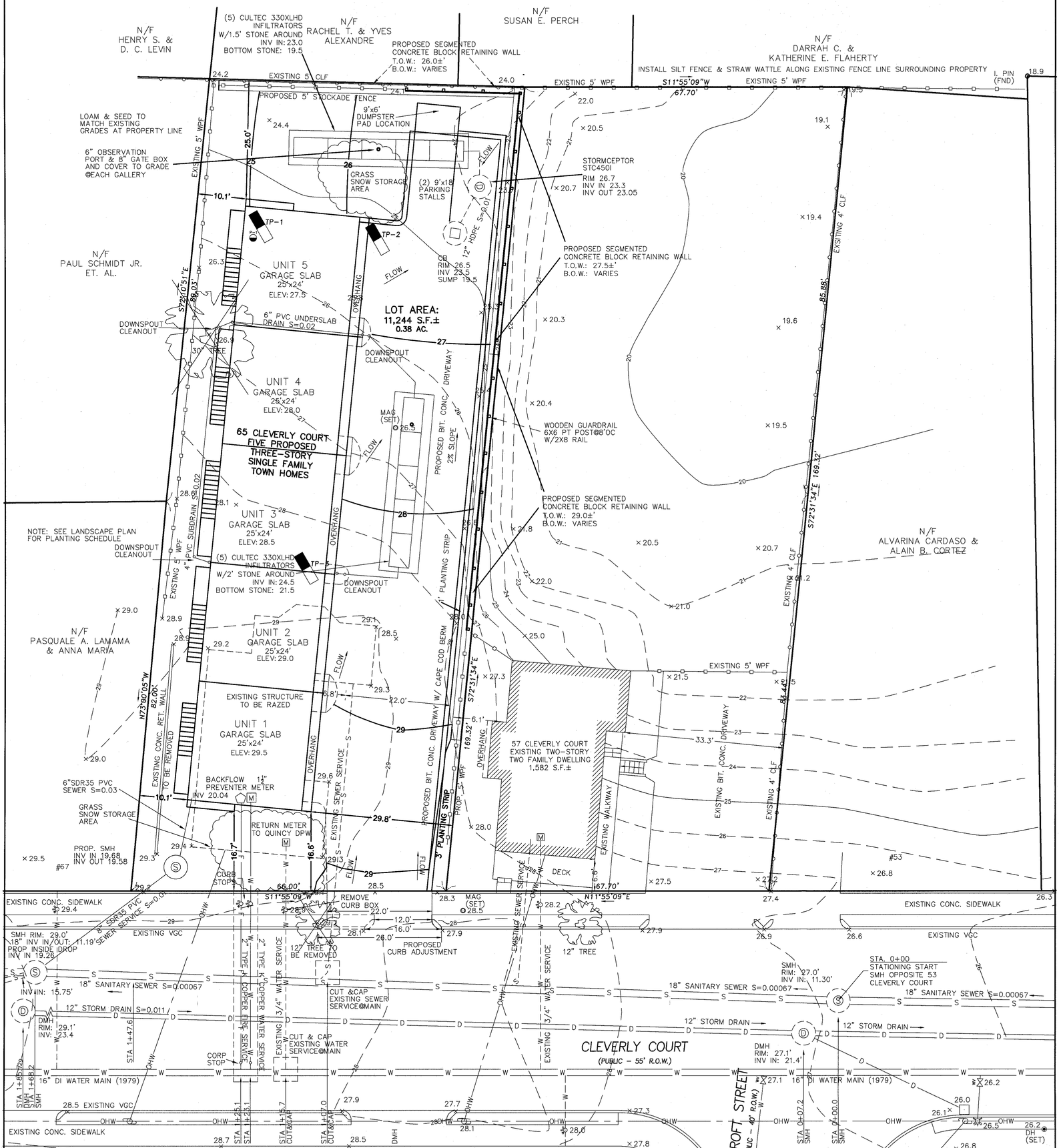

ELEVATIONS BASED UPON CITY OF QUINCY MA DATUM

ALL UTILITY TRENCHES WILL BE REPAIRED WITH CONTROL DENSITY FILL AND INFRA-RED TREATMENT

PLAN 361 PC. 1372-J

APPROVAL REQUIRED	APPROVAL UNDER ZONING ORDINANCE
CITY OF QUINCY PLANNING BOARD	CITY OF QUINCY BOARD OF APPEALS

GRAPHIC SCALE

10 0 5 10 20 40

(IN FEET)
1 inch = 10 ft.

REFERENCES:

ASSESSORS PLAN 2068
NORFOLK REGISTRY BK. 17730 PG. 580
" " BK. 17969 PG. 379
" " BK. 18804 PG. 204
" " BK. 32774 PG. 251
" " PL. 361 PG. 1372-J
" " PL. 894 PG. 626
" " PL. 1067 PG. 67
" " PL. 1389 PG. 174
" " PL. 1621 PG. 17
QUINCY DPW SEWER PL. 313
" " DRAIN PL. 501-D
" " ENGINEERING NB. 179 PG. 46-47
" " " NB. XXX PG. 135
" " " NB. XXX PG. 173

COMMONWEALTH OF MASSACHUSETTS FREDERICK J. GEISEL No. 30864 REGISTERED PROFESSIONAL ENGINEER

OWNER: MICHAEL GREHAN

PROPOSED SITE PLAN 65 CLEVERLY COURT QUINCY, MA FOR MICHAEL GREHAN

CIVIL ENVIRONMENTAL CONSULTANTS
8 OAK STREET PEABODY, MA 01960 978-531-1191

SHEET NO: 2 OF 3

DATE: FEB 23,2015 JOB: 3337
REV: 6/4/2015, 7/7/2015, 11/30/2015
DRAWN BY: C.R.L.

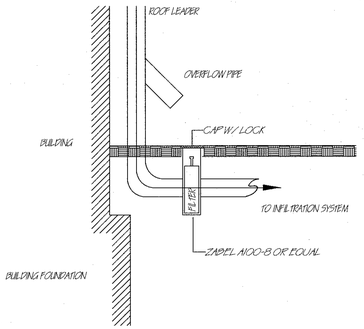

ROOF LEADER PIPING
NTS
© DANENA INC.

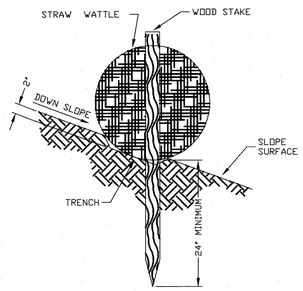

STRAW WATTLE DETAIL
(ON BARE SOIL)
NOT TO SCALE

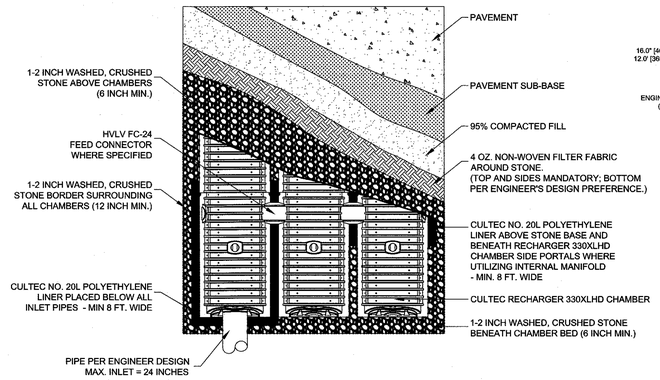

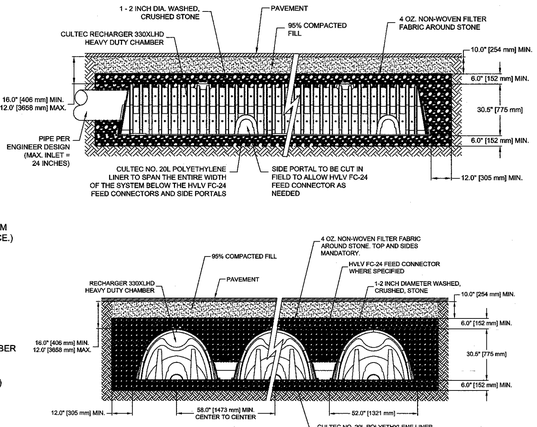

GENERAL NOTES
RECHARGER 330XLHD BY CULTEC, INC. OF BROOKFIELD, CT.
STORAGE PROVIDED = 11.32 CF/FT PER DESIGN UNIT.
REFER TO CULTEC, INC.'S CURRENT RECOMMENDED INSTALLATION GUIDELINES.
MAXIMUM ALLOWED COVER OVER TOP OF UNIT SHALL BE 12' (3.65m)
THE CHAMBER WILL BE DESIGNED TO WITHSTAND TRAFFIC LOADS WHEN INSTALLED ACCORDING TO CULTEC'S RECOMMENDED INSTALLATION INSTRUCTIONS

ALL RECHARGER 330XLHD HEAVY DUTY UNITS ARE MARKED WITH A COLOR STRIPE FORMED INTO THE PART ALONG THE LENGTH OF THE CHAMBER.
ALL RECHARGER 330XLHD CHAMBERS MUST BE INSTALLED IN ACCORDANCE WITH ALL APPLICABLE LOCAL, STATE AND FEDERAL REGULATIONS.

CULTEC RECHARGER 330XLHD INFILTRATOR DETAIL

Rinker MATERIALS™ — Concrete Pipe Division

STC 450i Precast Concrete Stormceptor®
(450 U.S. Gallon Capacity)

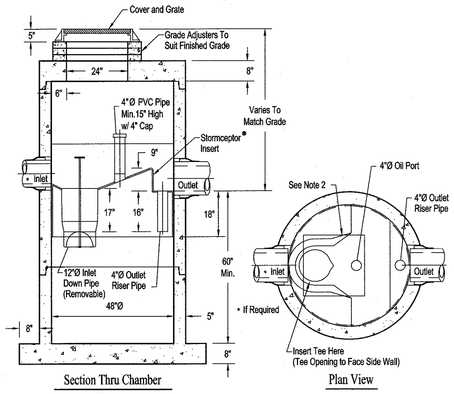

Section Thru Chamber — Plan View

Notes:
1. The Use Of Flexible Connection is Recommended at The Inlet and Outlet Where Applicable.
2. The Cover Should be Positioned Over The Inlet Drop Pipe and The Oil Port.
3. The Stormceptor System is protected by one or more of the following U.S. Patents: #4985148, #5498331, #5725760, #5753115, #5849181, #6068765, #6371690.
4. Contact a Concrete Pipe Division representative for further details not listed on this drawing.

Rinker 027

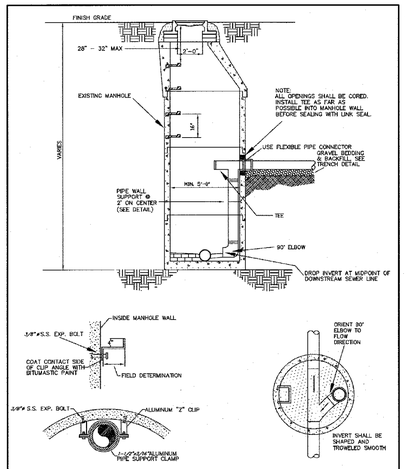

INSIDE DROP MANHOLE
(TO BE USED FOR DROPS OVER 18")
NOT TO SCALE

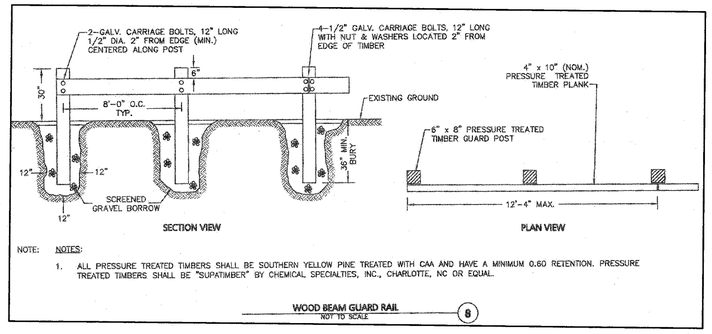

NOTE: NOTES:
1. ALL PRESSURE TREATED TIMBERS SHALL BE SOUTHERN YELLOW PINE TREATED WITH CAA AND HAVE A MINIMUM 0.60 RETENTION. PRESSURE TREATED TIMBERS SHALL BE "SUPATIMBER" BY CHEMICAL SPECIALTIES, INC., CHARLOTTE, NC OR EQUAL.

WOOD BEAM GUARD RAIL
NOT TO SCALE
8

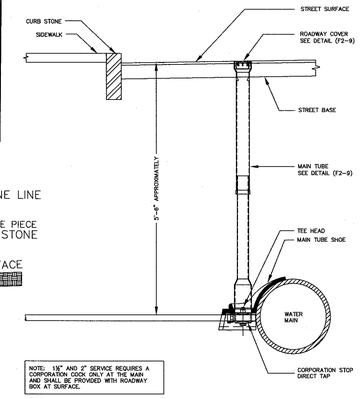

NOTE: 1½" AND 2" SERVICE REQUIRES A CORPORATION COCK ONLY AT THE MAIN AND SHALL BE PROVIDED WITH ROADWAY BOX AT SURFACE.

WATER/FIRE SERVICE CONNECTION

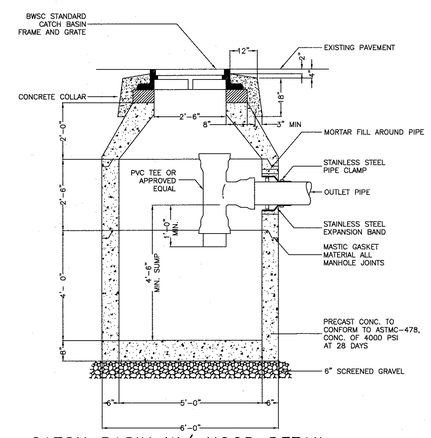

CATCH BASIN W/ HOOD DETAIL

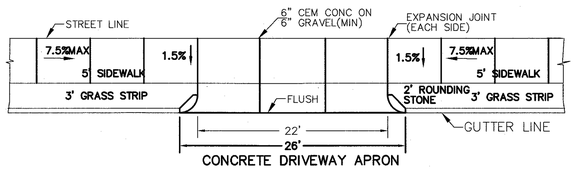

CONCRETE DRIVEWAY APRON

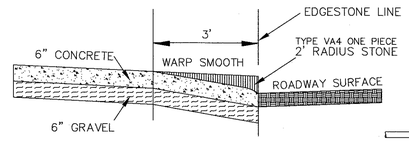

DRIVEWAY APRON DETAIL
(N.T.S.)

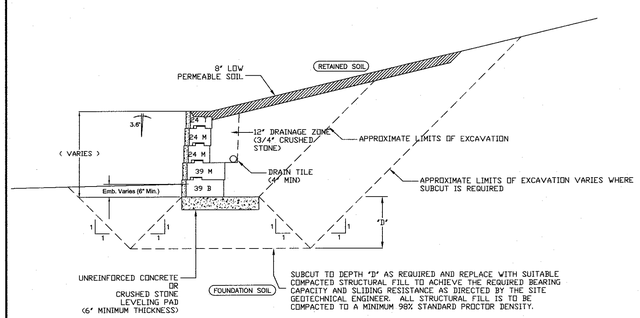

RETENTION WALL CROSS-SECTION

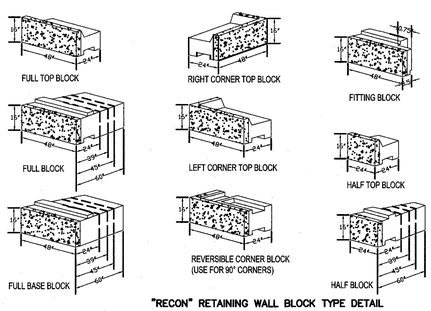

"RECON" RETAINING WALL BLOCK TYPE DETAIL

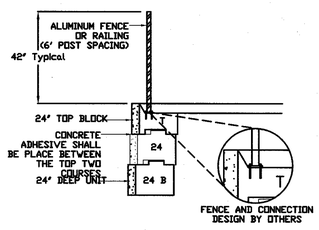

NOTE:
1. WHEN THE FENCE POST IS PLACED IN OR ON TOP OF THE TOP BLOCK, EACH TOP BLOCK SHOULD BE ADHERED TO THE BLOCK BENEATH IT. (PL PREMIUM IS THE RECOMMENDED CONCRETE ADHESIVE
2. DETAIL DOES NOT APPLY TO PRIVACY FENCING OR OTHER APPLICATIONS WHERE WIND LOAD WOULD NEED TO BE TAKEN INTO ACCOUNT

FENCE SECTON DETAIL
PLATE AND ANCHOR BOLTS

APPROVAL UNDER ZONING REGULATION BYLAWS REQUIRED

CITY OF QUINCY
PLANNING BOARD

DETAIL SHEET
65 CLEVERLY COURT
QUINCY, MA
FOR
MICHAEL GREHAN

CIVIL ENVIRONMENTAL CONSULTANTS
8 OAK STREET PEABODY, MA 01960 978-531-1191

SHEET NO: 3 OF 3

DATE: FEB 23,2015 JOB: 3337
REV: 6/4/2015, 7/7/2015, 11/30/2015
DRAWN BY: C.R.L.