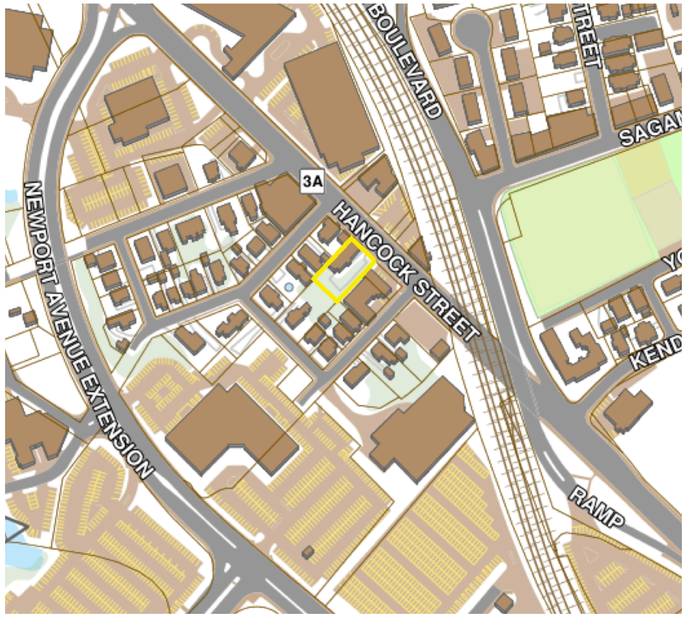

LOCUS

STREET VIEW LOOKING NORTH

PROPOSED 20-UNIT RESIDENTIAL DEVELOPMENT W/ 29 PARKING SPACES
151 HANCOCK STREET, QUINCY, MA

1-Mar-16

Location: 151 Hancock St., Quincy, MA

Zoning District: Business C

QUINCY ZONING CODE REVIEW

1.) Multi-family dwellings (R-2) are allowed in BUS. C districts by special permit. (Per 17.20.040, note 2)

2.) Proposed 4- story, 20-unit residential building contains 22,521 Net sf +/- of living area.

3.) Lot: 13,325 sf +/-

4.) 17.20.040 Table of Dimensional Requirements: "√" DENOTES ZONING RELIEF REQUIRED

	Item	Zone	Required	Existing	Proposed	Remarks
√	a.) Min. lot size	Bus. C	42,000 sf	13,325 sf	13,325 sf	Note 4
√	b.) Min. lot area/D.U.	"	2,500 sf/unit	N/A	666 sf/unit	Note 1
	c.) Min. lot width/frontage	"	100 ft	232.34 ft +/-	232.34 ft +/-	
	d.) Max. floor area ratio	"	3.5	N/A	1.7	Note 4
	e.) Max. no. of stories	"	6 stories	N/A	4 stories/40' +/-	at Hancock St.
	f.) Green open space/D.U.	"	100 sf/D.U.	N/A	187 sf/unit	Note 4 & 5
√	g.) Front yard min. depth	"	1/4 bldg hgt or 10'	N/A	5.0'	Note 3
√	h.) Side yard min. depth	"	1/4 bldg hgt or 8.75'	N/A	5.0'(LT) & 8.8'(RT)	Note 3
√	j.) Rear yard min. depth	"	1/4 bldg hgt or 7.5'	N/A	1.0' (LT) & 5.0' (RT)	Note 3
√	k.) Off-street parking: residence	"	1.5 space/unit	N/A	29 spaces or 1.45 sp/D.U.	Note 2 at Garage
		Bus. C	or 30 spaces		1 Temporary Space off Myrtle Street	

Note 1: Min. lot area for 20 units: 2,500 x 20 units equals 50,000 sf. Sec. 17.20.040, note 5.

Note 2: 20 dwelling units x 1.5 equals 30 spaces required. Section 5.1.8, Table of Off-street Parking.

Note 3: Proposed bldg. height @ front - 40 ft x 25% = 10 ft. setback. Section 17.20.040, Note 2.
Proposed bldg. height @ side - 35 ft x 25% = 8.75 ft. setback. Section 17.20.040, Note 2.
Proposed bldg. height @ rear - 30 ft x 25% = 7.5 ft. setback. Section 17.20.040, Note 2.

Note 4: Section 17.20.040, Note 2.

Note 5: Open space calc. includes "private gardens, or landscaped elements and natural features on site, walks, and terraces." Sec. 10.0. 3,732 sf ÷ 203 = 187 sf/D.U.

Level	GSF		Net SF*	
B	1,827.0	sf	0.0	sf
G	10,148.0	sf	0.0	sf
2	9,036.0	sf	7,830.0	sf
3	9,036.0	sf	7,830.0	sf
4	8,079.0	sf	6,861.0	sf
Totals	38,126.0	sf	22,521.0	sf

*NET square footage is measured to ext. face of walls and dimising walls and excludes basement, storage,

Unit Types

Unit #	Type	Net SF
1	2 BR/ 1.5B	1,077.0
2	2 BR/ 1.5B	1,025.0
3	2 BR/ 2B	1,271.0
4	2 BR/ 2B	1,260.0
5	2 BR/ 2B	1,101.0
6	2 BR/ 1B	1,093.0
7	2 BR/ 1B	1,003.0
8	2 BR/ 1.5B	1,077.0
9	2 BR/ 1.5B	1,025.0
10	2 BR/ 2B	1,271.0
11	2 BR/ 2B	1,260.0
12	2 BR/ 2B	1,101.0
13	2 BR/ 2B	1,093.0
14	2 BR/ 1B	1,003.0
15	2 BR/ 1.5B	1,077.0
16	2 BR/ 1.5B	1,025.0
17	2 BR/ 2B	1,271.0
18	2 BR/ 2B	1,260.0
19	2 BR/ 2B	1,118.0
20	2 BR/ 2B	1,110.0
Totals		22,521.0

PROJECT INFO:

Address: 151 Hancock Street, Quincy, MA
Exist. Occupancy:
Proposed Occupancy: R-2/ S-2

Lot: 13,325 sf ±
Parcel: Combine: #151: 6163-5
#143: 6163-4
District: Business C
Ward:

SCHEDULE OF DRAWINGS

A00 PROJECT INFORMATION
V01 PERSPECTIVE VIEWS
V02 PERSPECTIVE VIEWS
L01 LANDSCAPE PLAN
X01 ARCHITECTURAL SITE PLAN
X02 EXISTING CONDITIONS SITE PLAN
X03 SITE PHOTOS
A01 FOUNDATION/ BASEMENT FLOOR PLAN
A02 GROUND FLOOR PLAN
A03 SECOND FLOOR PLAN
A04 THIRD FLOOR PLAN
A05 FOURTH FLOOR PLAN
A06 ROOF PLAN
A08 1-1 BUILDING SECTION
A09 2-2 BUILDING SECTION
A10 3-3 BUILDING SECTION
A11 NORTHEAST (STREET) ELEVATION
A12 SOUTHWEST ELEVATION
A13 NORTHWEST ELEVATION - NORTH BUILDING
A14 NORTHWEST ELEVATION - SOUTH BUILDING
A15 SOUTHEAST ELEVATION - NORTH BUILDING
A16 SOUTHEAST ELEVATION - SOUTH BUILDING
C-0 SITE PREPARATION & DEMOLITION PLAN
C-1 SITE LAYOUT & GRADING PLAN
C-2 DETAIL SHEET #1
C-3 DETAIL SHEET #2

FOR CITY USE

ATTORNEY:
WILLIAM H. KEENER, ESQ.
1145E HANCOCK STREET
QUINCY, MA 02169
TEL: 617-786-0281

LAND SURVEYOR:
NEPONSET VALLEY SURVEY ASSOC., INC.
95 WHITE STREET
QUINCY, MA 02169
TEL: 617-472-4867

CIVIL ENGINEER:
JOYCE CONSULTING GROUP, INC.
100 WYMAN ROAD
BRAINTREE, MA 02184
TEL: 781-817-6120

PROJECT ARCHITECT:
TIM JOHNSON ARCHITECT, LLC
190 OLD COLONY AVENUE
BOSTON, MA 02127
TEL: 617-464-4363

STRUCTURAL ENGINEER:
WEBB STRUCTURAL SERVICES, INC.
670 MAIN STREET
READING, MA 01867
TEL: 781-779-1330

OWNER:
BROMFIELD DEVELOPMENT, LLC
314 WEST BROADWAY
BOSTON, MA 02127
TEL: 617-592-5323

PROPOSED 20-UNIT RESIDENTIAL DEVELOPMENT W/ 29 PARKING SPACES
151 HANCOCK STREET
QUINCY, MA 02171

REVISIONS

Tim Johnson Architect, LLC

TIM JOHNSON ARCHITECT, LLC

PRELIMINARY DWG. SET

DRAWING TITLE

PROJECT INFORMATION

DATE: 03/01/16 SC: N. T. S.

A00

STREET VIEW LOOKING SOUTH

ATTORNEY:
WILLIAM H. KEENER, ESQ.
1145E HANCOCK STREET
QUINCY, MA 02169
TEL: 617-786-0281

LAND SURVEYOR:
NEPONSET VALLEY SURVEY
ASSOC., INC.
95 WHITE STREET
QUINCY, MA 02169
TEL: 617-472-4867

PROJECT ARCHITECT:
TIM JOHNSON ARCHITECT, LLC
190 OLD COLONY AVENUE
BOSTON, MA 02127
TEL: 617-464-4363

CIVIL ENGINEER:
JOYCE CONSULTING GROUP, INC.
100 WYMAN ROAD
BRAINTREE, MA 02184
TEL: 781-817-6120

STRUCTURAL ENGINEER:
WEBB STRUCTURAL SERVICES, INC.
670 MAIN STREET
READING, MA 01867
TEL: 781-779-1330

PROPOSED 20-UNIT
RESIDENTIAL DEVELOPMENT
W/ 29 PARKING SPACES
151 HANCOCK STREET
QUINCY, MA 02171

OWNER:
BROMFIELD DEVELOPMENT, LLC
314 WEST BROADWAY
BOSTON, MA 02127
TEL: 617-592-5323

REVISIONS

△	△
△	△
△	△
△	△
△	△

Tim Johnson Architect, LLC

TIM JOHNSON ARCHITECT, LLC

PRELIMINARY DWG. SET

DRAWING TITLE

PERSPECTIVE VIEWS

DATE: 03/01/16 | SC: N. T. S.

V01

STREET VIEW LOOKING NORTH

PROPOSED 20-UNIT
RESIDENTIAL DEVELOPMENT
W/ 29 PARKING SPACES
151 HANCOCK STREET
QUINCY, MA 02171

OWNER:
BROMFIELD DEVELOPMENT, LLC
314 WEST BROADWAY
BOSTON, MA 02127
TEL: 617-592-5323

PROJECT ARCHITECT:
TIM JOHNSON ARCHITECT, LLC
190 OLD COLONY AVENUE
BOSTON, MA 02127
TEL: 617-464-4363

STRUCTURAL ENGINEER:
WEBB STRUCTURAL SERVICES, INC.
670 MAIN STREET
READING, MA 01867
TEL: 781-779-1330

LAND SURVEYOR:
NEPONSET VALLEY SURVEY
ASSOC., INC.
95 WHITE STREET
QUINCY, MA 02169
TEL: 617-472-4867

CIVIL ENGINEER:
JOYCE CONSULTING GROUP, INC.
100 WYMAN ROAD
BRAINTREE, MA 02184
TEL: 781-817-6120

ATTORNEY:
WILLIAM H. KEENER, ESQ.
1145E HANCOCK STREET
QUINCY, MA 02169
TEL: 617-786-0281

REVISIONS

△1	△
△	△
△	△
△	△
△	△

Tim Johnson Architect, LLC

TIM JOHNSON ARCHITECT, LLC

PRELIMINARY DWG. SET

DRAWING TITLE

PERSPECTIVE VIEWS

DATE: 03/01/16 | SC: N. T. S.

V02

Plant List

Quantity	Size	Scientific Name	Common Name	Remarks
Trees				
5	3.5-4" Cal	Carpinus caroliniana	American Hornbeam	B&B, Matched, SIngle Stem, Limb Up Bottom Branches
3	10-12' Ht.	Cercis canadensis	Eastern Redbud	B&B, Matched
Perennials, Groundcovers and Bulbs				
565	1 Gal.	Asarum canadense	Wild Ginger	8" OC, Traingula Sp.
400	1 Gal.	Epimedium x youngianum roseum	Fairy Wings	10" OC, Triangular Sp.
500	Top Size	Galianthus elwesii	Snowdrops	6" OC, Plant in Drifts
500	Top Size	Hyacinthoides hispanica Rose Queen	Spanish Bluebells	6" OC, Plant in Drifts
275	1 Gal.	Lamium maculatum Purple Dragon	Dead Nettle	12" OC, Traingular Sp.
375	Flats	Pachysandra terminallis	Japanese Spruge	6" OC, Triangular Sp.
115	1 Gal.	Pennisetum purpureum Princess	Purple Fountain Grass	24" OC, Triangular Sp.
125	1 Gal.	Polysstichum acrostichoides	Christmas Fern	18" OC, Triangular Sp.
560	1 Gal.	Tiarella wherryi	Foam Flower	12" OC, Triangular Sp.
Vines				
8	2 Gal.	Akebia quinata	Fiveleaf Akebia	1 Per Column, Train to Climb
Green Roof				
1,703	Trays	Sedum mix	Sedum mix	Each Tray Measures 12"x24"

TREES

Carpinus caroliniana

Cersis canadensis

PERRENIALS, GROUNDCOVERS and BULBS

Asarum canadense

Edimedium x youngianum roseum

Galiathus elwesii

Hyacinthoides hispanica Rose Queen

Lamium maculatum Purple Dragon

Pachysandra terminalis

Pennisetum purpureum Princess

Polystichum acrostichoides

151 Hancock Street Quincy, Massachusetts

Prepared for Bromfield Development, LLC
with Tim Johnson Architect LLC *by* Catherine Oranchak/Landscape Architect

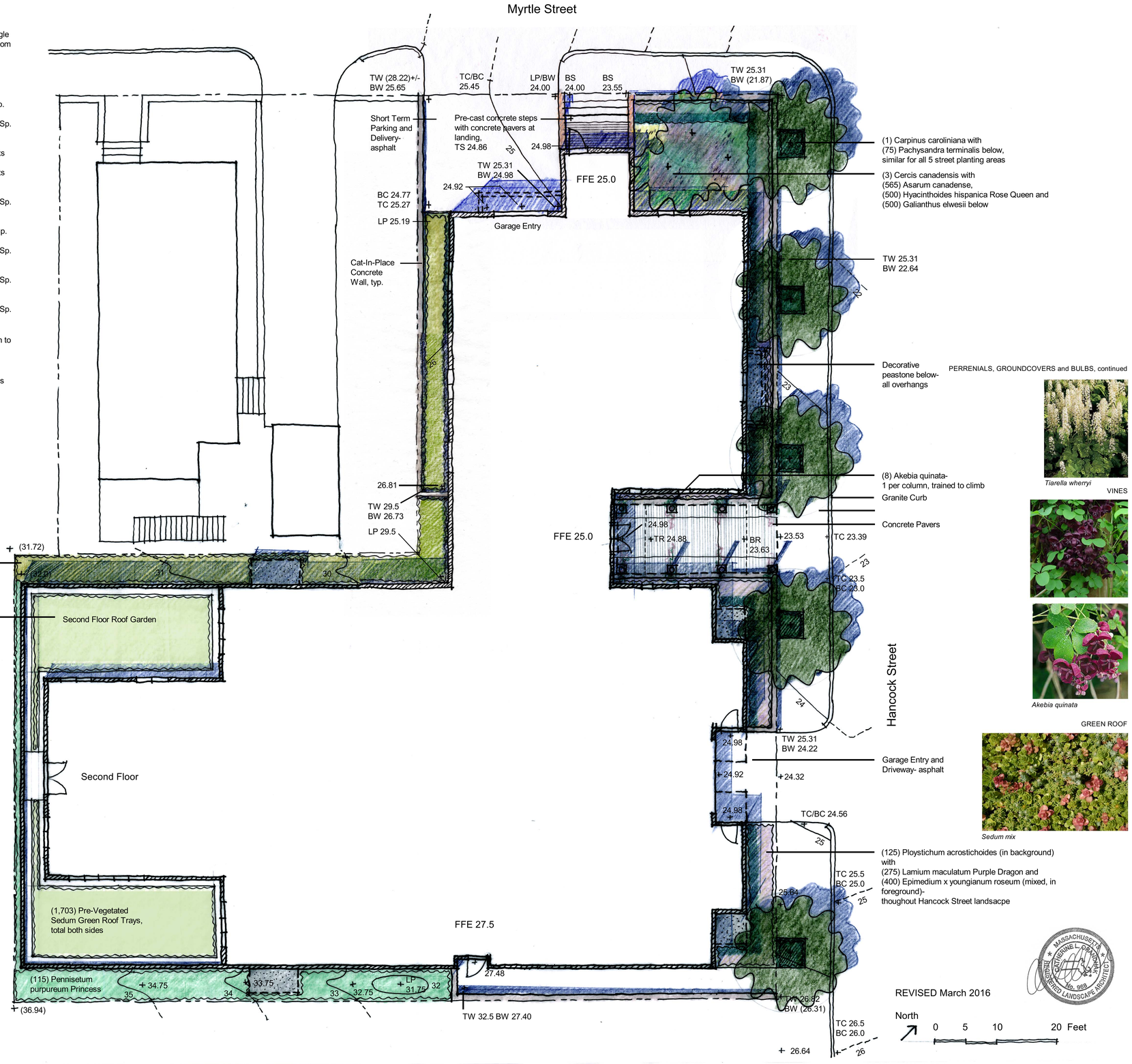

ATTORNEY:
WILLIAM H. KEENER, ESQ.
1145E HANCOCK STREET
QUINCY, MA 02169
TEL: 617-786-0281

LAND SURVEYOR:
NEPONSET VALLEY SURVEY ASSOC., INC.
95 WHITE STREET
QUINCY, MA 02169
TEL: 617-472-4867

CIVIL ENGINEER:
JOYCE CONSULTING GROUP, INC.
100 WYMAN ROAD
BRAINTREE, MA 02184
TEL: 781-817-6120

PROJECT ARCHITECT:
TIM JOHNSON ARCHITECT, LLC
190 OLD COLONY AVENUE
BOSTON, MA 02127
TEL: 617-464-4363

STRUCTURAL ENGINEER:
WEBB STRUCTURAL SERVICES, INC.
670 MAIN STREET
READING, MA 01867
TEL: 781-779-1330

PROPOSED 20-UNIT
RESIDENTIAL DEVELOPMENT
W/ 29 PARKING SPACES
151 HANCOCK STREET
QUINCY, MA 02171

OWNER:
BROMFIELD DEVELOPMENT, LLC
314 WEST BROADWAY
BOSTON, MA 02127
TEL: 617-592-5323

REVISIONS

1	△
△	△
△	△
△	△
△	△

Tim Johnson Architect, LLC

TIM JOHNSON ARCHITECT, LLC

PRELIMINARY DWG. SET

DRAWING TITLE

LANDSCAPE PLAN

DATE: 03/01/16 | SC: AS NOTED

L01

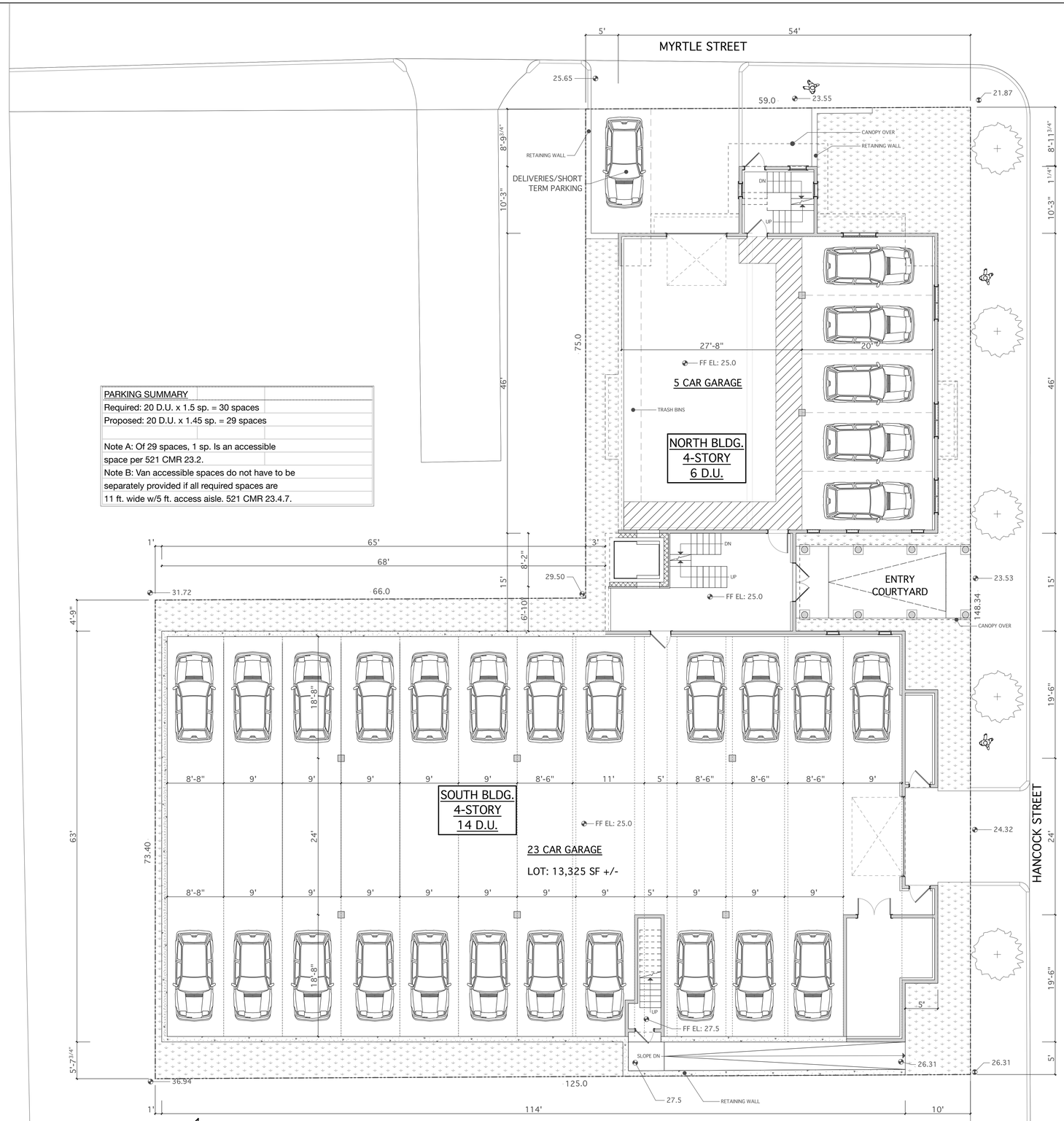

PARKING SUMMARY
Required: 20 D.U. x 1.5 sp. = 30 spaces
Proposed: 20 D.U. x 1.45 sp. = 29 spaces
Note A: Of 29 spaces, 1 sp. Is an accessible space per 521 CMR 23.2.
Note B: Van accessible spaces do not have to be separately provided if all required spaces are 11 ft. wide w/5 ft. access aisle. 521 CMR 23.4.7.

N

SITE PLAN

10,148 sq ft gross

0 2' 4' 8'

ATTORNEY:
WILLIAM H. KEENER, ESQ.
1145E HANCOCK STREET
QUINCY, MA 02169
TEL: 617-786-0281

LAND SURVEYOR:
NEPONSET VALLEY SURVEY ASSOC., INC.
95 WHITE STREET
QUINCY, MA 02169
TEL: 617-472-4867

PROJECT ARCHITECT:
TIM JOHNSON ARCHITECT, LLC
190 OLD COLONY AVENUE
BOSTON, MA 02127
TEL: 617-464-4363

CIVIL ENGINEER:
JOYCE CONSULTING GROUP, INC.
100 WYMAN ROAD
BRAINTREE, MA 02184
TEL: 781-817-6120

PROPOSED 20-UNIT RESIDENTIAL DEVELOPMENT
W/ 29 PARKING SPACES
151 HANCOCK STREET
QUINCY, MA 02171

STRUCTURAL ENGINEER:
WEBB STRUCTURAL SERVICES, INC.
670 MAIN STREET
READING, MA 01867
TEL: 781-779-1330

OWNER:
BROMFIELD DEVELOPMENT, LLC
314 WEST BROADWAY
BOSTON, MA 02127
TEL: 617-592-5323

REVISIONS

△	△
△	△
△	△
△	△
△	△

Tim Johnson Architect, LLC

TIM JOHNSON ARCHITECT, LLC

PRELIMINARY DWG. SET

DRAWING TITLE

ARCHITECTURAL SITE PLAN

DATE: 03/01/16 | SC: 1/8" = 1'-0"

X01

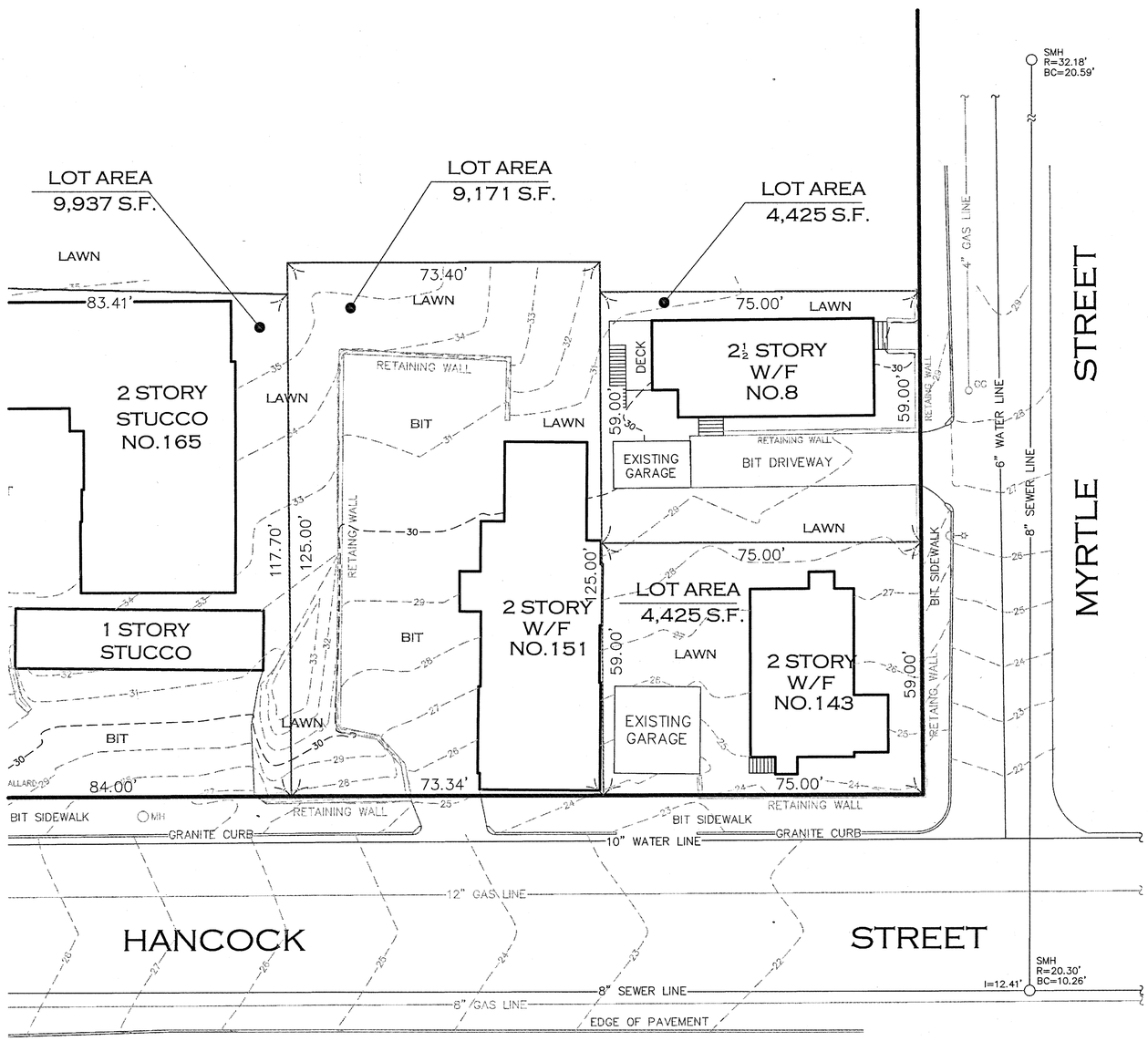

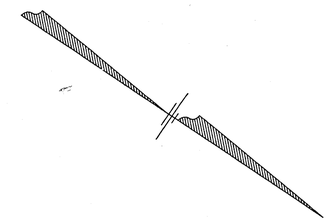

NOTE:

ALL ELEVATIONS ARE BASED ON THE CITY OF QUINCY SEWER DATUM.

STEPHEN P. DESROCHE PLS No. 27699

COMMONWEALTH OF MASSACHUSETTS
STEPHEN P. DESROCHE No. 27699
REGISTERED PROFESSIONAL LAND SURVEYOR

SITE PLAN
SHOWING
EXISTING CONDITIONS
AT
143 - 151 HANCOCK STREET
IN
QUINCY, MASS.

PREPARED FOR:
BROMFIELD DEVELOPMENT

PREPARED BY:
NEPONSET VALLEY SURVEY ASSOC., INC.
95 WHITE STREET
QUINCY, MA 02169

SCALE: 1"=20'

DATE: OCTOBER 13, 2015

TMF (06-07301)

ATTORNEY:
WILLIAM H. KEENER, ESQ.
1145E HANCOCK STREET
QUINCY, MA 02169
TEL: 617-786-0281

LAND SURVEYOR:
NEPONSET VALLEY SURVEY ASSOC., INC.
95 WHITE STREET
QUINCY, MA 02169
TEL: 617-472-4867

CIVIL ENGINEER:
JOYCE CONSULTING GROUP, INC.
100 WYMAN ROAD
BRAINTREE, MA 02184
TEL: 781-817-6120

PROJECT ARCHITECT:
TIM JOHNSON ARCHITECT, LLC
190 OLD COLONY AVENUE
BOSTON, MA 02127
TEL: 617-464-4363

STRUCTURAL ENGINEER:
WEBB STRUCTURAL SERVICES, INC.
670 MAIN STREET
READING, MA 01867
TEL: 781-779-1330

PROPOSED 20-UNIT
RESIDENTIAL DEVELOPMENT
W/ 29 PARKING SPACES
151 HANCOCK STREET
QUINCY, MA 02171

OWNER:
BROMFIELD DEVELOPMENT, LLC
314 WEST BROADWAY
BOSTON, MA 02127
TEL: 617-592-5323

REVISIONS

△	△
△	△
△	△
△	△
△	△

Tim Johnson Architect, LLC

TIM JOHNSON ARCHITECT, LLC

PRELIMINARY DWG. SET

DRAWING TITLE
EXISTING CONDITIONS SITE PLAN

DATE: 03/01/16 SC: N. T. S.

X02

151-1

151-2

151-3

151-4

151-5

151-6

151-7

151-8

PHOTO DESCRIPTIONS:

151-1 VIEW AT REAR OF SITE
151-2 VIEW AT REAR OF SITE LOOKING TOWARD HANCOCK STREET
151-3 VIEW OF SITE FROM HANCOCK STREET
151-4 VIEW OF SITE FROM HANCOCK STREET
151-5 VIEW OF SITE FROM HANCOCK STREET
151-6 VIEW OF SITE FROM MYRTLE STREET
151-7 VIEW OF SITE FROM MYRTLE STREET
151-8 VIEW OF SITE FROM MYRTLE STREET LOOKING TOWARD HANCOCK STREET

PROPOSED 20-UNIT
RESIDENTIAL DEVELOPMENT
W/ 29 PARKING SPACES
151 HANCOCK STREET
QUINCY, MA 02171

OWNER:
BROMFIELD DEVELOPMENT, LLC
314 WEST BROADWAY
BOSTON, MA 02127
TEL: 617-592-5323

PROJECT ARCHITECT:
TIM JOHNSON ARCHITECT, LLC
190 OLD COLONY AVENUE
BOSTON, MA 02127
TEL: 617-464-4363

STRUCTURAL ENGINEER:
WEBB STRUCTURAL SERVICES, INC.
670 MAIN STREET
READING, MA 01867
TEL: 781-779-1330

LAND SURVEYOR:
NEPONSET VALLEY SURVEY
ASSOC., INC.
95 WHITE STREET
QUINCY, MA 02169
TEL: 617-472-4867

CIVIL ENGINEER:
JOYCE CONSULTING GROUP, INC.
100 WYMAN ROAD
BRAINTREE, MA 02184
TEL: 781-817-6120

ATTORNEY:
WILLIAM H. KEENER, ESQ.
1145E HANCOCK STREET
QUINCY, MA 02169
TEL: 617-786-0281

REVISIONS

1	△
△	△
△	△
△	△
△	△

Tim Johnson Architect, LLC

TIM JOHNSON ARCHITECT, LLC

PRELIMINARY DWG. SET

DRAWING TITLE

SITE PHOTOS

DATE: 03/01/16 SC: N. T. S.

X03

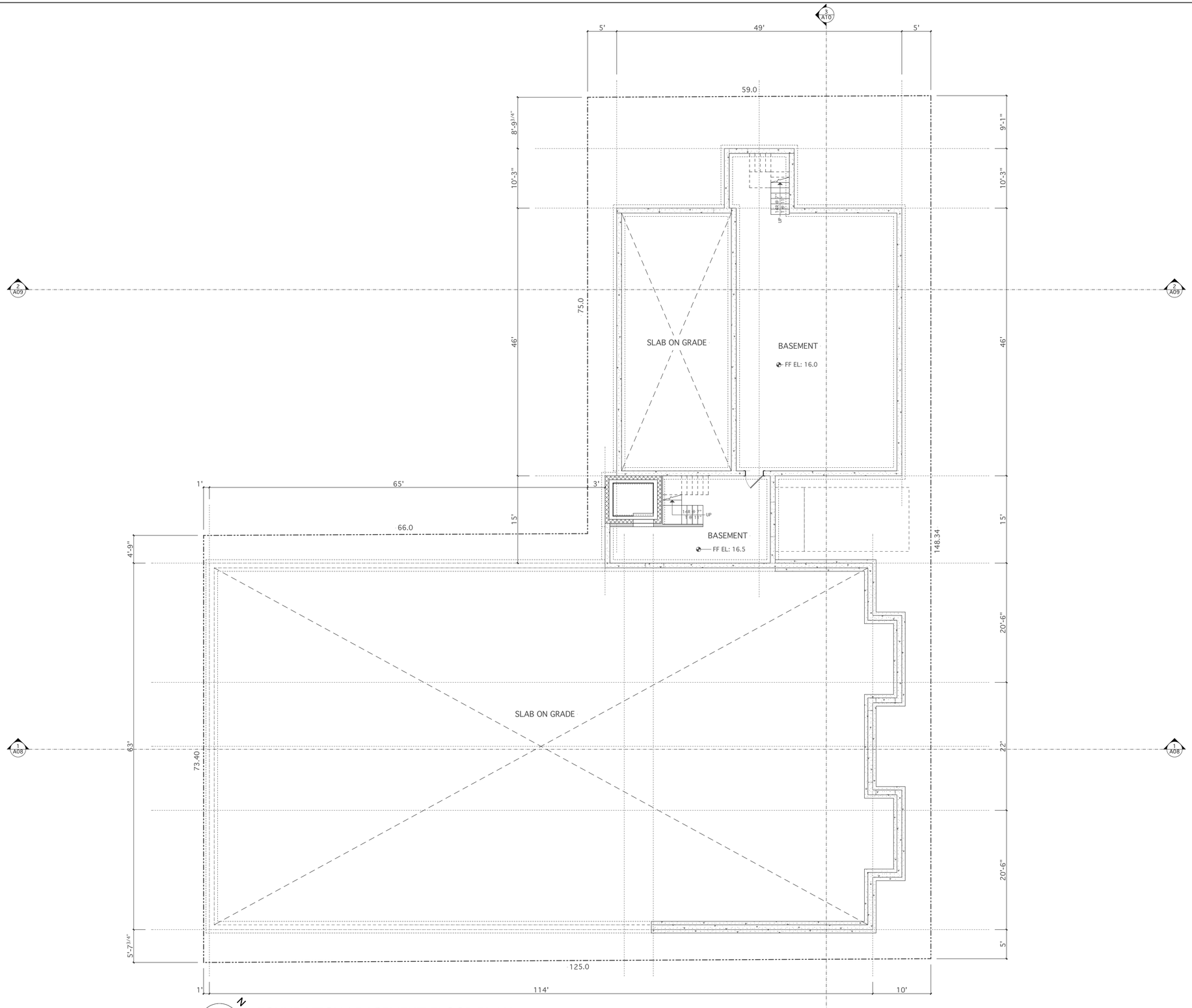

FOUNDATION/ BASEMENT FLOOR PLAN

0 2' 4' 8'

1,827 sq ft gross

ATTORNEY:
WILLIAM H. KEENER, ESQ.
1145E HANCOCK STREET
QUINCY, MA 02169
TEL: 617-786-0281

LAND SURVEYOR:
NEPONSET VALLEY SURVEY
ASSOC., INC.
95 WHITE STREET
QUINCY, MA 02169
TEL: 617-472-4867

CIVIL ENGINEER:
JOYCE CONSULTING GROUP, INC.
100 WYMAN ROAD
BRAINTREE, MA 02184
TEL: 781-817-6120

PROJECT ARCHITECT:
TIM JOHNSON ARCHITECT, LLC
190 OLD COLONY AVENUE
BOSTON, MA 02127
TEL: 617-464-4363

STRUCTURAL ENGINEER:
WEBB STRUCTURAL SERVICES, INC.
670 MAIN STREET
READING, MA 01867
TEL: 781-779-1330

PROPOSED 20-UNIT
RESIDENTIAL DEVELOPMENT
W/ 29 PARKING SPACES
151 HANCOCK STREET
QUINCY, MA 02171

OWNER:
BROMFIELD DEVELOPMENT, LLC
314 WEST BROADWAY
BOSTON, MA 02127
TEL: 617-592-5323

REVISIONS

1	△
△	△
△	△
△	△
△	△

Tim Johnson Architect, LLC

TIM JOHNSON ARCHITECT, LLC

PRELIMINARY DWG. SET

DRAWING TITLE

FOUNDATION/ BASEMENT FLOOR PLAN

DATE: 03/01/16

SC: 1/8" = 1'-0"

A01

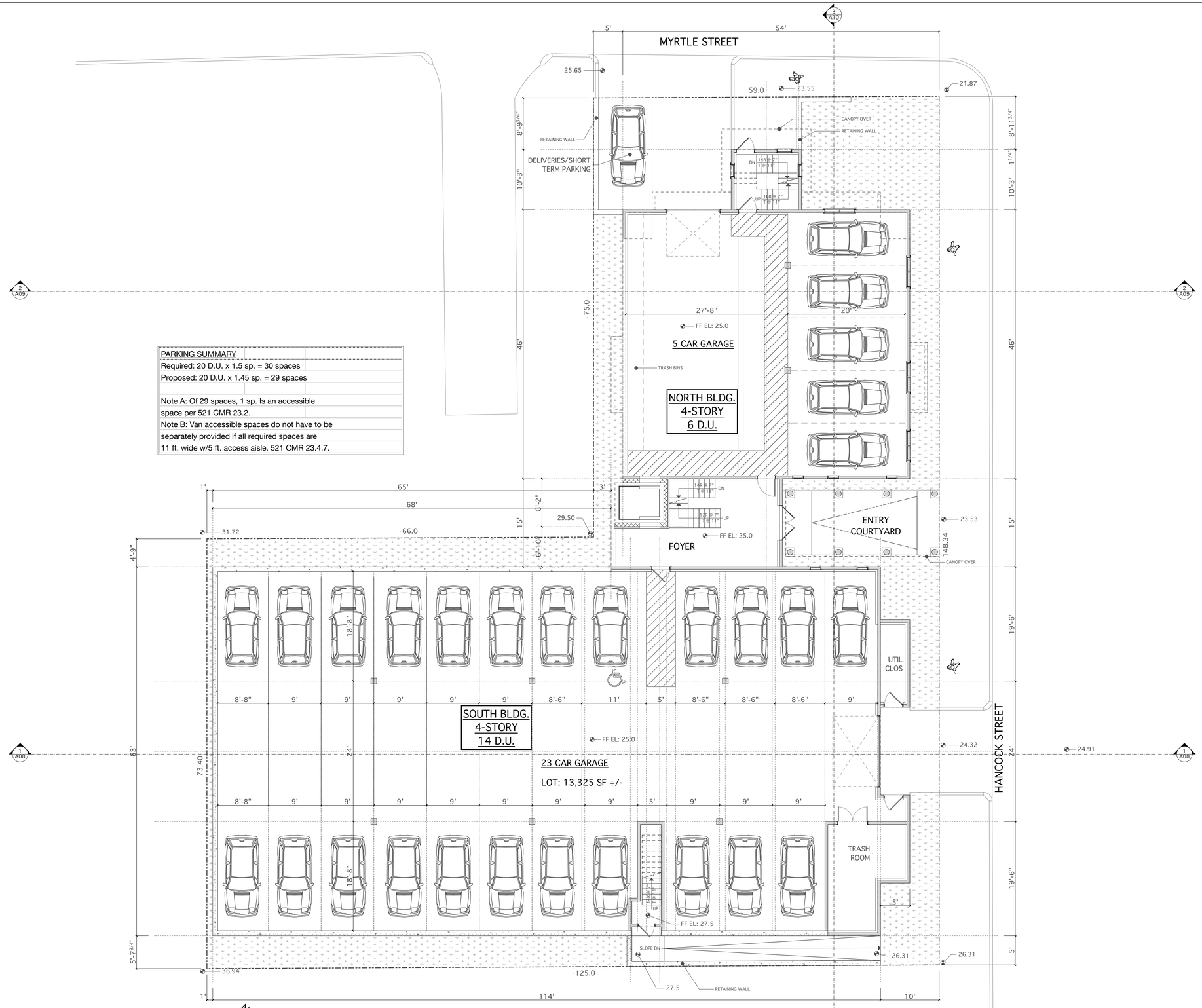

PARKING SUMMARY
Required: 20 D.U. x 1.5 sp. = 30 spaces
Proposed: 20 D.U. x 1.45 sp. = 29 spaces
Note A: Of 29 spaces, 1 sp. Is an accessible space per 521 CMR 23.2.
Note B: Van accessible spaces do not have to be separately provided if all required spaces are 11 ft. wide w/5 ft. access aisle. 521 CMR 23.4.7.

GROUND FLOOR PLAN

10,148 sq ft gross

ATTORNEY:
WILLIAM H. KEENER, ESQ.
1145E HANCOCK STREET
QUINCY, MA 02169
TEL: 617-786-0281

LAND SURVEYOR:
NEPONSET VALLEY SURVEY ASSOC., INC.
95 WHITE STREET
QUINCY, MA 02169
TEL: 617-472-4867

CIVIL ENGINEER:
JOYCE CONSULTING GROUP, INC.
100 WYMAN ROAD
BRAINTREE, MA 02184
TEL: 781-817-6120

PROJECT ARCHITECT:
TIM JOHNSON ARCHITECT, LLC
190 OLD COLONY AVENUE
BOSTON, MA 02127
TEL: 617-464-4363

STRUCTURAL ENGINEER:
WEBB STRUCTURAL SERVICES, INC.
670 MAIN STREET
READING, MA 01867
TEL: 781-779-1330

PROPOSED 20-UNIT RESIDENTIAL DEVELOPMENT
W/ 29 PARKING SPACES
151 HANCOCK STREET
QUINCY, MA 02171

OWNER:
BROMFIELD DEVELOPMENT, LLC
314 WEST BROADWAY
BOSTON, MA 02127
TEL: 617-592-5323

REVISIONS

1	△
△	△
△	△
△	△
△	△

Tim Johnson Architect, LLC

TIM JOHNSON ARCHITECT, LLC

PRELIMINARY DWG. SET

DRAWING TITLE

GROUND FLOOR PLAN

DATE: 03/01/16 | SC: 1/8" = 1'-0"

A02

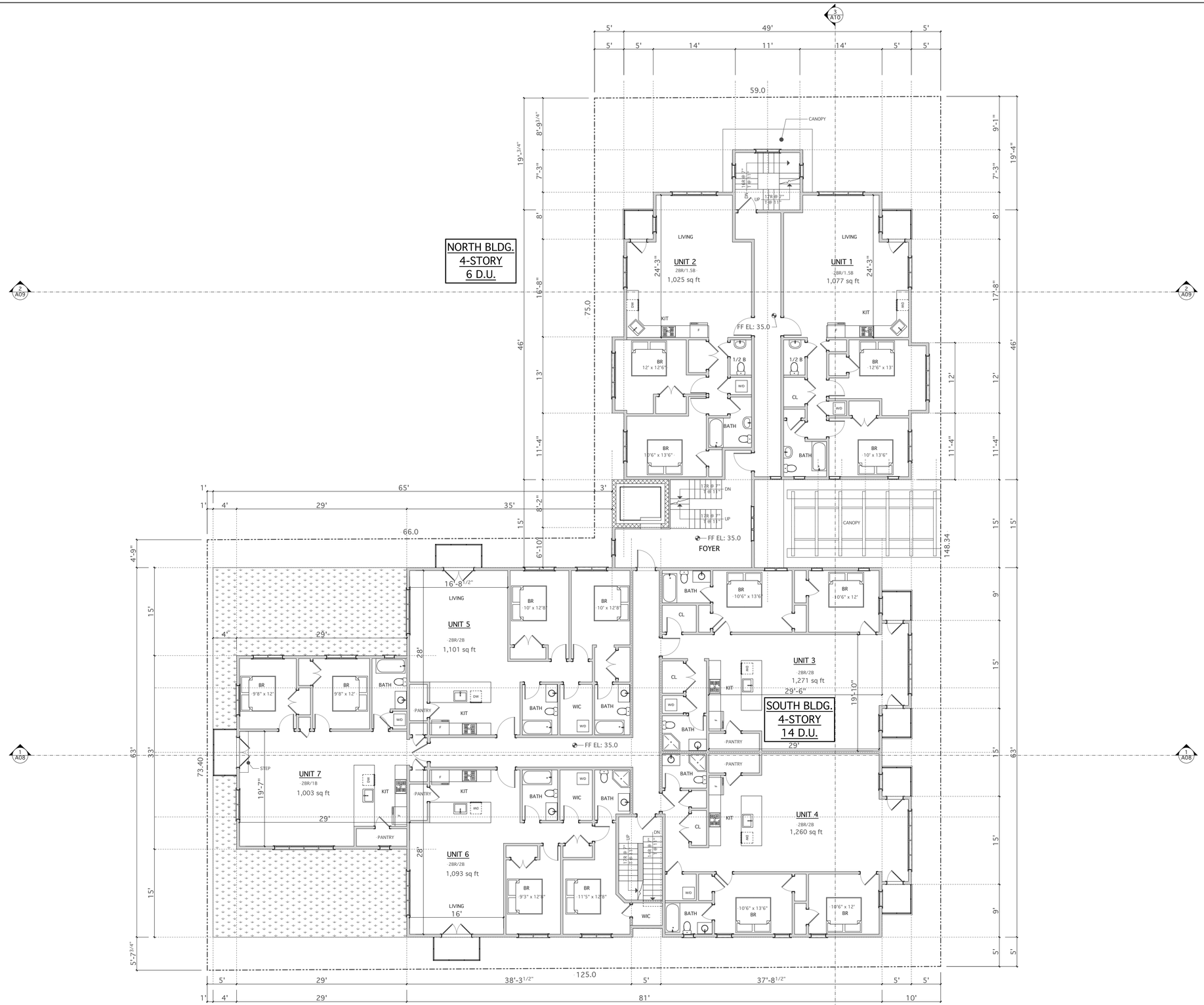

SECOND FLOOR PLAN

9,036 sq ft gross

0 2' 4' 8'

ATTORNEY:
WILLIAM H. KEENER, ESQ.
1145E HANCOCK STREET
QUINCY, MA 02169
TEL: 617-786-0281

LAND SURVEYOR:
NEPONSET VALLEY SURVEY
ASSOC., INC.
95 WHITE STREET
QUINCY, MA 02169
TEL: 617-472-4867

CIVIL ENGINEER:
JOYCE CONSULTING GROUP, INC.
100 WYMAN ROAD
BRAINTREE, MA 02184
TEL: 781-817-6120

PROJECT ARCHITECT:
TIM JOHNSON ARCHITECT, LLC
190 OLD COLONY AVENUE
BOSTON, MA 02127
TEL: 617-464-4363

STRUCTURAL ENGINEER:
WEBB STRUCTURAL SERVICES, INC.
670 MAIN STREET
READING, MA 01867
TEL: 781-779-1330

PROPOSED 20-UNIT
RESIDENTIAL DEVELOPMENT
W/ 29 PARKING SPACES
151 HANCOCK STREET
QUINCY, MA 02171

OWNER:
BROMFIELD DEVELOPMENT, LLC
314 WEST BROADWAY
BOSTON, MA 02127
TEL: 617-592-5323

REVISIONS

Tim Johnson Architect, LLC

TIM JOHNSON ARCHITECT, LLC

PRELIMINARY DWG. SET

DRAWING TITLE

SECOND FLOOR PLAN

DATE: 03/01/16

SC: 1/8" = 1'-0"

A03

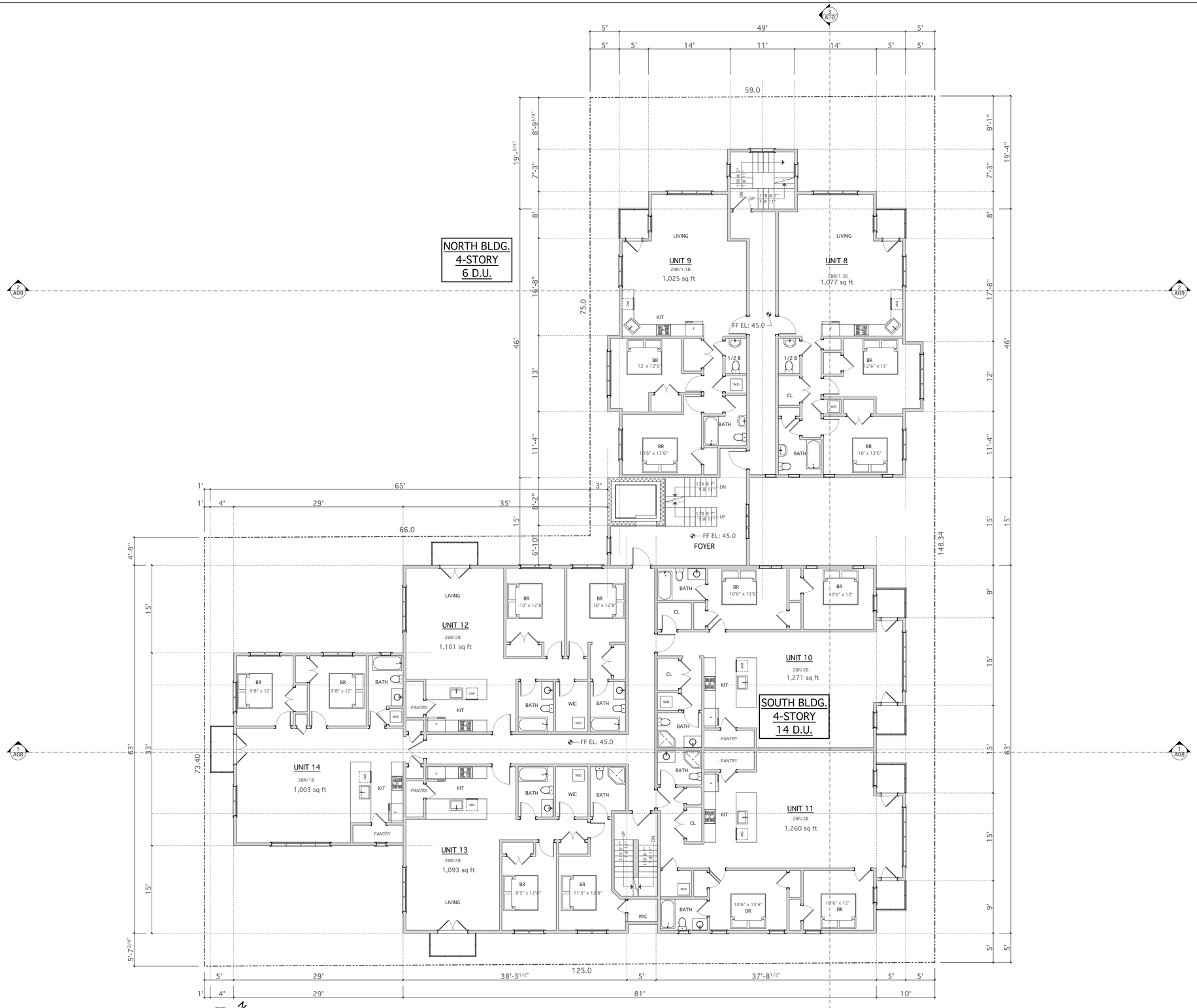

THIRD FLOOR PLAN

9,036 sq ft gross

0 2' 4' 8'

ATTORNEY:
WILLIAM H. KEENER, ESQ.
1145E HANCOCK STREET
QUINCY, MA 02169
TEL: 617-786-0281

LAND SURVEYOR:
NEPONSET VALLEY SURVEY
ASSOC., INC.
95 WHITE STREET
QUINCY, MA 02169
TEL: 617-472-4867

CIVIL ENGINEER:
JOYCE CONSULTING GROUP, INC.
100 WYMAN ROAD
BRAINTREE, MA 02184
TEL: 781-817-6120

PROJECT ARCHITECT:
TIM JOHNSON ARCHITECT, LLC
190 OLD COLONY AVENUE
BOSTON, MA 02127
TEL: 617-464-4363

STRUCTURAL ENGINEER:
WEBB STRUCTURAL SERVICES, INC.
670 MAIN STREET
READING, MA 01867
TEL: 781-779-1330

PROPOSED 20-UNIT
RESIDENTIAL DEVELOPMENT
W/ 29 PARKING SPACES
151 HANCOCK STREET
QUINCY, MA 02171

OWNER:
BROMFIELD DEVELOPMENT, LLC
314 WEST BROADWAY
BOSTON, MA 02127
TEL: 617-592-5323

REVISIONS

1	△
△	△
△	△
△	△
△	△

Tim Johnson Architect, LLC

TIM JOHNSON ARCHITECT, LLC

PRELIMINARY DWG. SET

DRAWING TITLE

THIRD FLOOR PLAN

DATE: 03/01/16 | SC: 1/8" = 1'-0"

A04

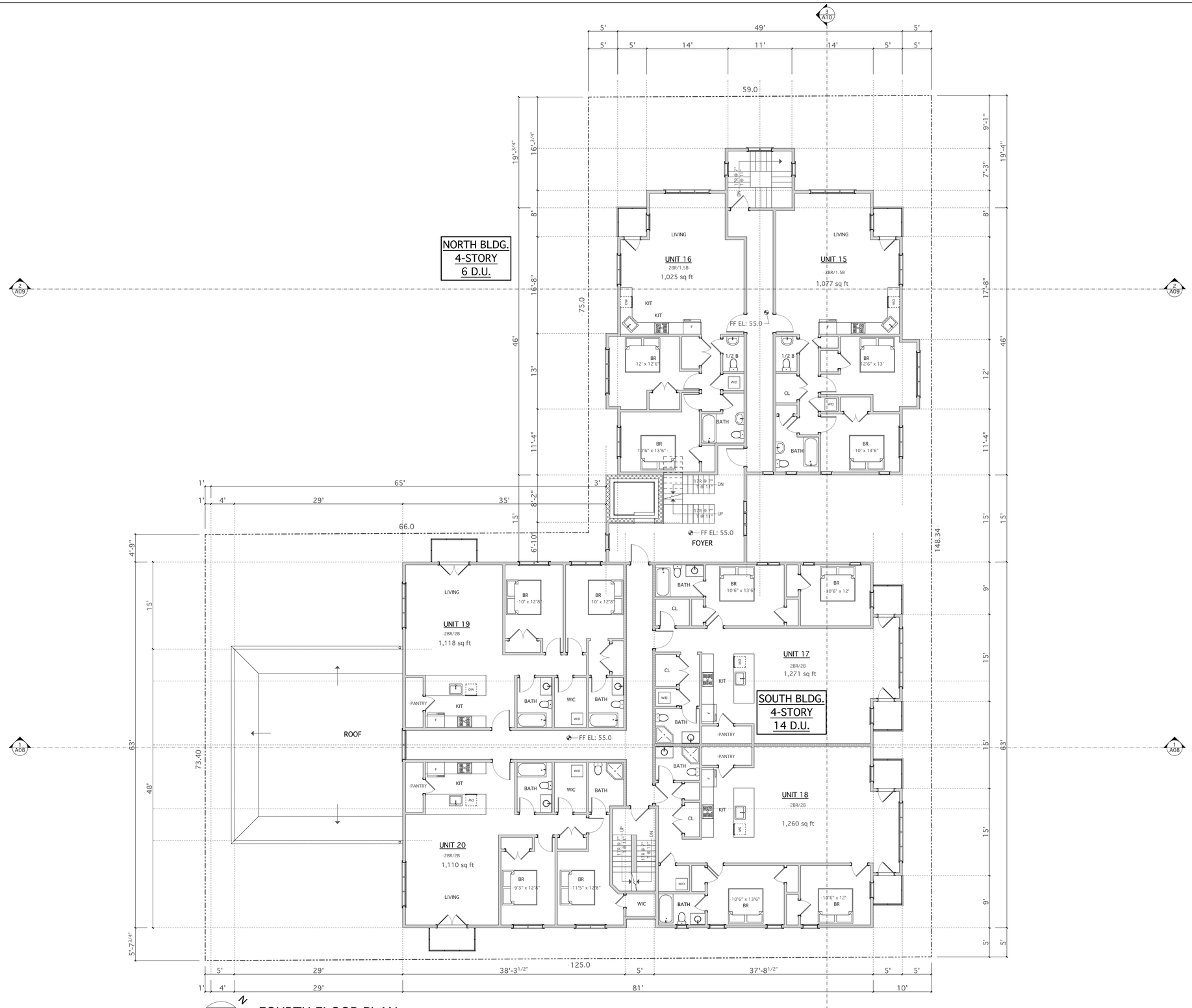

FOURTH FLOOR PLAN

8,079 sq ft gross

0 2' 4' 8'

ATTORNEY:
WILLIAM H. KEENER, ESQ.
1145E HANCOCK STREET
QUINCY, MA 02169
TEL: 617-786-0281

LAND SURVEYOR:
NEPONSET VALLEY SURVEY
ASSOC., INC.
95 WHITE STREET
QUINCY, MA 02169
TEL: 617-472-4867

CIVIL ENGINEER:
JOYCE CONSULTING GROUP, INC.
100 WYMAN ROAD
BRAINTREE, MA 02184
TEL: 781-817-6120

PROJECT ARCHITECT:
TIM JOHNSON ARCHITECT, LLC
190 OLD COLONY AVENUE
BOSTON, MA 02127
TEL: 617-464-4363

STRUCTURAL ENGINEER:
WEBB STRUCTURAL SERVICES, INC.
670 MAIN STREET
READING, MA 01867
TEL: 781-779-1330

PROPOSED 20-UNIT
RESIDENTIAL DEVELOPMENT
W/ 29 PARKING SPACES
151 HANCOCK STREET
QUINCY, MA 02171

OWNER:
BROMFIELD DEVELOPMENT, LLC
314 WEST BROADWAY
BOSTON, MA 02127
TEL: 617-592-5323

REVISIONS

△	△
△	△
△	△
△	△
△	△

Tim Johnson Architect, LLC

TIM JOHNSON ARCHITECT, LLC

PRELIMINARY DWG. SET

DRAWING TITLE

FOURTH FLOOR PLAN

DATE: 03/01/16

SC: 1/8" = 1'-0"

A05

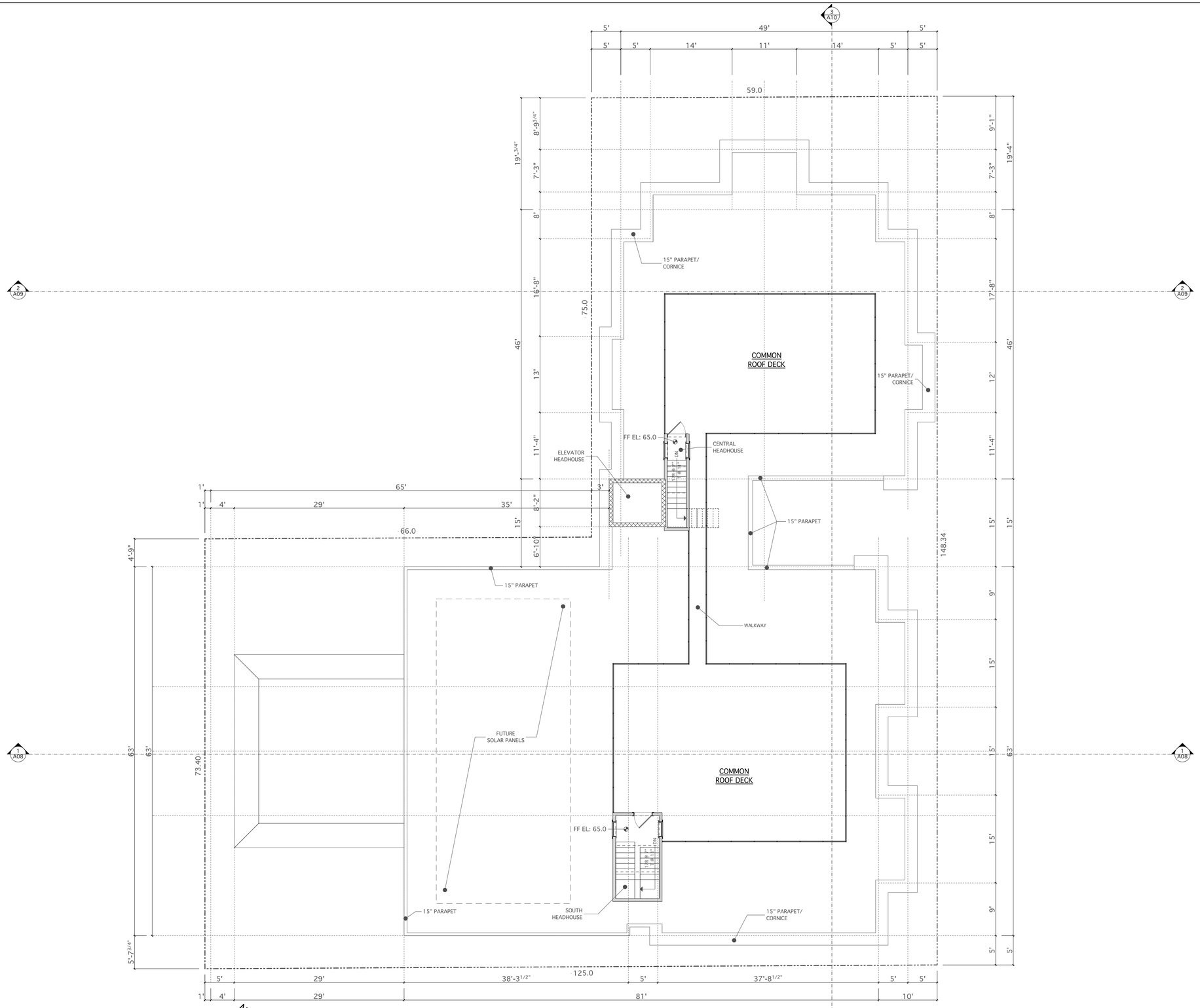

ROOF PLAN

ATTORNEY:
WILLIAM H. KEENER, ESQ.
1145E HANCOCK STREET
QUINCY, MA 02169
TEL: 617-786-0281

LAND SURVEYOR:
NEPONSET VALLEY SURVEY
ASSOC., INC.
95 WHITE STREET
QUINCY, MA 02169
TEL: 617-472-4867

CIVIL ENGINEER:
JOYCE CONSULTING GROUP, INC.
100 WYMAN ROAD
BRAINTREE, MA 02184
TEL: 781-817-6120

PROJECT ARCHITECT:
TIM JOHNSON ARCHITECT, LLC
190 OLD COLONY AVENUE
BOSTON, MA 02127
TEL: 617-464-4363

STRUCTURAL ENGINEER:
WEBB STRUCTURAL SERVICES, INC.
670 MAIN STREET
READING, MA 01867
TEL: 781-779-1330

PROPOSED 20-UNIT
RESIDENTIAL DEVELOPMENT
W/ 29 PARKING SPACES
151 HANCOCK STREET
QUINCY, MA 02171

OWNER:
BROMFIELD DEVELOPMENT, LLC
314 WEST BROADWAY
BOSTON, MA 02127
TEL: 617-592-5323

REVISIONS

1	△
△	△
△	△
△	△
△	△

Tim Johnson Architect, LLC

TIM JOHNSON ARCHITECT, LLC

PRELIMINARY DWG. SET

DRAWING TITLE

ROOF PLAN

DATE: 03/01/16

SC: 1/8" = 1'-0"

A06

SOUTH BUILDING

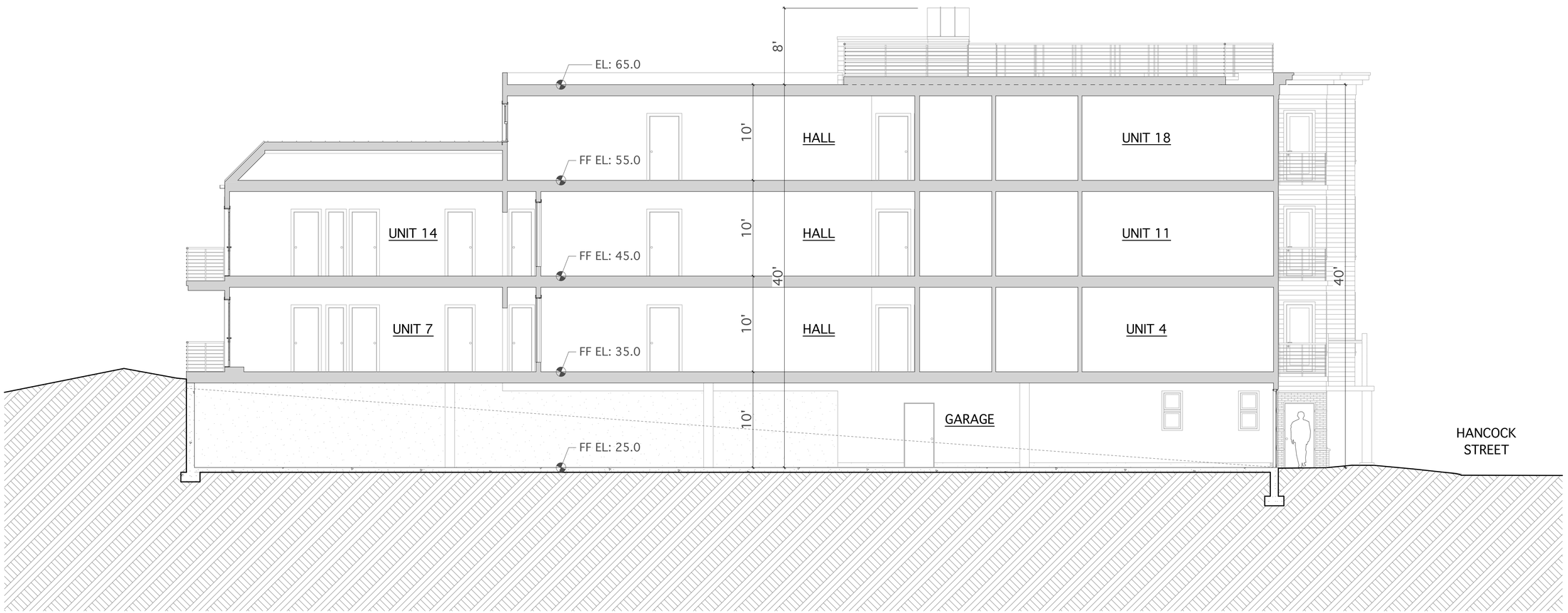

1-1 BLDG. SECTION

0 2' 4' 8'

ATTORNEY:
WILLIAM H. KEENER, ESQ.
1145E HANCOCK STREET
QUINCY, MA 02169
TEL: 617-786-0281

LAND SURVEYOR:
NEPONSET VALLEY SURVEY
ASSOC., INC.
95 WHITE STREET
QUINCY, MA 02169
TEL: 617-472-4867

CIVIL ENGINEER:
JOYCE CONSULTING GROUP, INC.
100 WYMAN ROAD
BRAINTREE, MA 02184
TEL: 781-817-6120

PROJECT ARCHITECT:
TIM JOHNSON ARCHITECT, LLC
190 OLD COLONY AVENUE
BOSTON, MA 02127
TEL: 617-464-4363

STRUCTURAL ENGINEER:
WEBB STRUCTURAL SERVICES, INC.
670 MAIN STREET
READING, MA 01867
TEL: 781-779-1330

PROPOSED 20-UNIT
RESIDENTIAL DEVELOPMENT
W/ 29 PARKING SPACES
151 HANCOCK STREET
QUINCY, MA 02171

OWNER:
BROMFIELD DEVELOPMENT, LLC
314 WEST BROADWAY
BOSTON, MA 02127
TEL: 617-592-5323

REVISIONS

1	

Tim Johnson Architect, LLC

TIM JOHNSON ARCHITECT, LLC

PRELIMINARY DWG. SET

DRAWING TITLE

1-1 BUILDING SECTION

DATE: 03/01/16 | SC: 3/16" = 1'-0"

A08

NORTH BUILDING

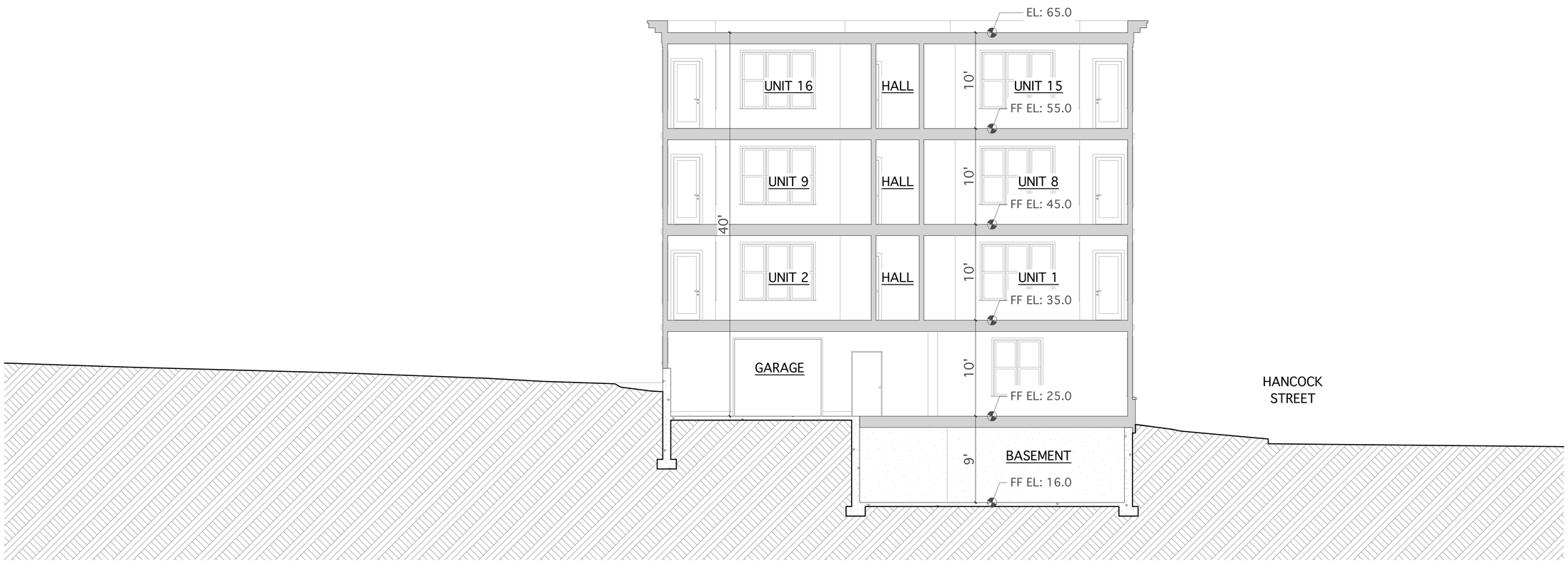

2-2 BLDG. SECTION

0 2' 4' 8'

ATTORNEY:
WILLIAM H. KEENER, ESQ.
1145E HANCOCK STREET
QUINCY, MA 02169
TEL: 617-786-0281

LAND SURVEYOR:
NEPONSET VALLEY SURVEY
ASSOC., INC.
95 WHITE STREET
QUINCY, MA 02169
TEL: 617-472-4867

PROJECT ARCHITECT:
TIM JOHNSON ARCHITECT, LLC
190 OLD COLONY AVENUE
BOSTON, MA 02127
TEL: 617-464-4363

CIVIL ENGINEER:
JOYCE CONSULTING GROUP, INC.
100 WYMAN ROAD
BRAINTREE, MA 02184
TEL: 781-817-6120

PROPOSED 20-UNIT
RESIDENTIAL DEVELOPMENT
W/ 29 PARKING SPACES
151 HANCOCK STREET
QUINCY, MA 02171

STRUCTURAL ENGINEER:
WEBB STRUCTURAL SERVICES, INC.
670 MAIN STREET
READING, MA 01867
TEL: 781-779-1330

OWNER:
BROMFIELD DEVELOPMENT, LLC
314 WEST BROADWAY
BOSTON, MA 02127
TEL: 617-592-5323

REVISIONS

1	△
△	△
△	△
△	△
△	△

Tim Johnson Architect, LLC

TIM JOHNSON ARCHITECT, LLC

PRELIMINARY DWG. SET

DRAWING TITLE

2-2 BUILDING SECTION

DATE: 03/01/16 | SC: 3/16" = 1'-0"

A09

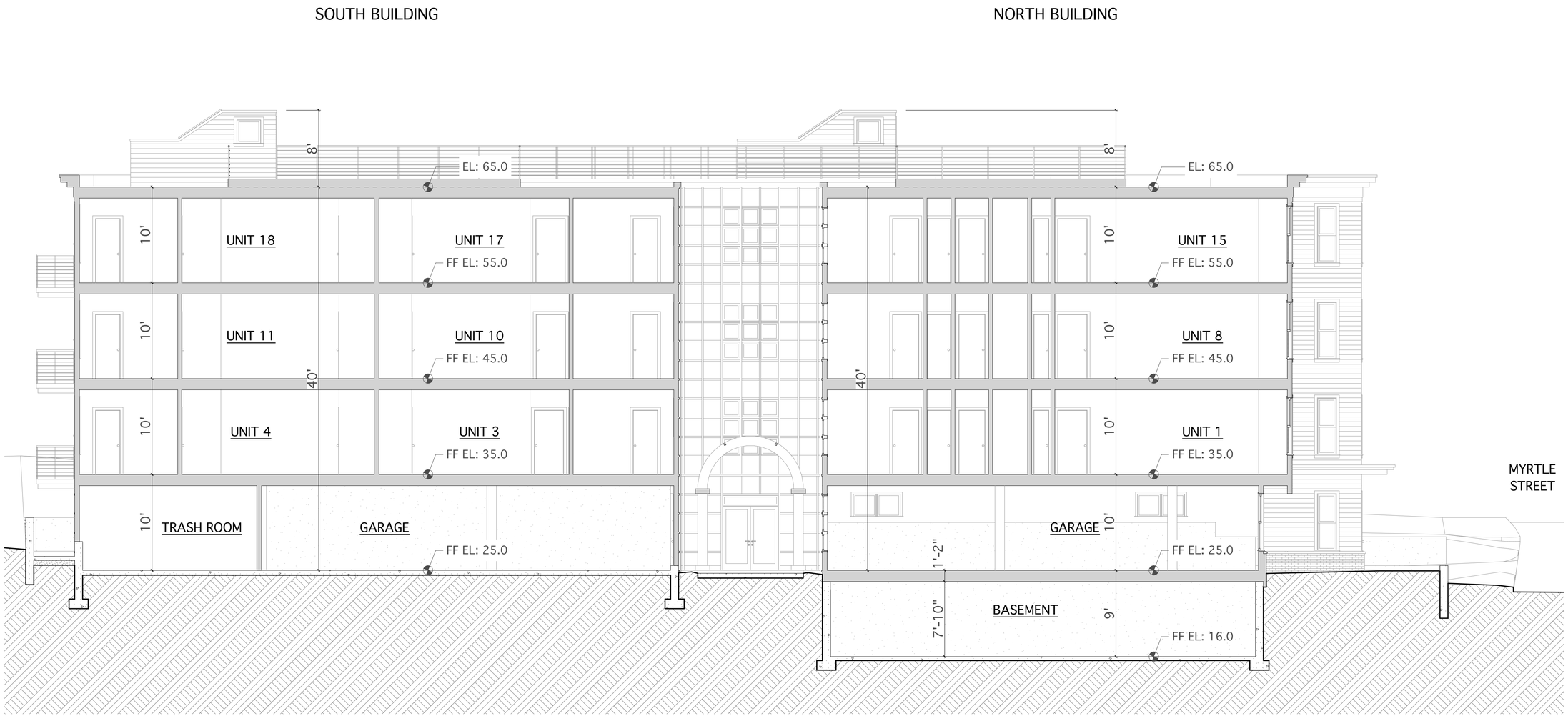

3-3 BLDG. SECTION

0 2' 4' 8'

ATTORNEY:
WILLIAM H. KEENER, ESQ.
1145E HANCOCK STREET
QUINCY, MA 02169
TEL: 617-786-0281

LAND SURVEYOR:
NEPONSET VALLEY SURVEY
ASSOC., INC.
95 WHITE STREET
QUINCY, MA 02169
TEL: 617-472-4867

CIVIL ENGINEER:
JOYCE CONSULTING GROUP, INC.
100 WYMAN ROAD
BRAINTREE, MA 02184
TEL: 781-817-6120

PROJECT ARCHITECT:
TIM JOHNSON ARCHITECT, LLC
190 OLD COLONY AVENUE
BOSTON, MA 02127
TEL: 617-464-4363

STRUCTURAL ENGINEER:
WEBB STRUCTURAL SERVICES, INC.
670 MAIN STREET
READING, MA 01867
TEL: 781-779-1330

PROPOSED 20-UNIT
RESIDENTIAL DEVELOPMENT
W/ 29 PARKING SPACES
151 HANCOCK STREET
QUINCY, MA 02171

OWNER:
BROMFIELD DEVELOPMENT, LLC
314 WEST BROADWAY
BOSTON, MA 02127
TEL: 617-592-5323

REVISIONS

1	△
△	△
△	△
△	△
△	△

Tim Johnson Architect, LLC

TIM JOHNSON ARCHITECT, LLC

PRELIMINARY DWG. SET

DRAWING TITLE

3-3 BUILDING SECTION

DATE: 03/01/16 | SC: 3/16" = 1'-0"

A10

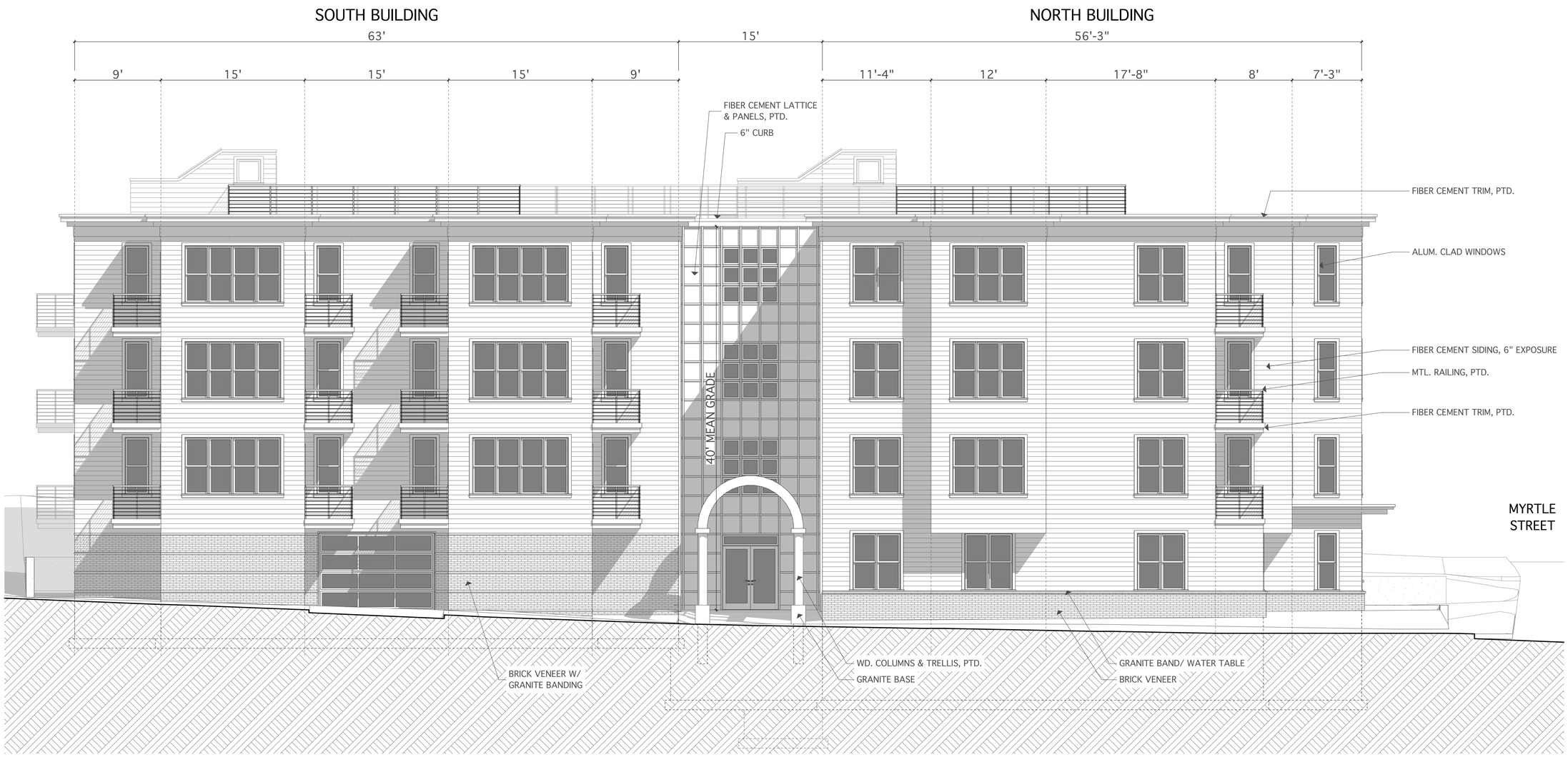

NORTHEAST (HANCOCK STREET) ELEVATION

0 2' 4' 8'

ATTORNEY:
WILLIAM H. KEENER, ESQ.
1145E HANCOCK STREET
QUINCY, MA 02169
TEL: 617-786-0281

LAND SURVEYOR:
NEPONSET VALLEY SURVEY ASSOC., INC.
95 WHITE STREET
QUINCY, MA 02169
TEL: 617-472-4867

CIVIL ENGINEER:
JOYCE CONSULTING GROUP, INC.
100 WYMAN ROAD
BRAINTREE, MA 02184
TEL: 781-817-6120

PROJECT ARCHITECT:
TIM JOHNSON ARCHITECT, LLC
190 OLD COLONY AVENUE
BOSTON, MA 02127
TEL: 617-464-4363

STRUCTURAL ENGINEER:
WEBB STRUCTURAL SERVICES, INC.
670 MAIN STREET
READING, MA 01867
TEL: 781-779-1330

PROPOSED 20-UNIT RESIDENTIAL DEVELOPMENT
W/ 29 PARKING SPACES
151 HANCOCK STREET
QUINCY, MA 02171

OWNER:
BROMFIELD DEVELOPMENT, LLC
314 WEST BROADWAY
BOSTON, MA 02127
TEL: 617-592-5323

REVISIONS

△	△
△	△
△	△
△	△
△	△

Tim Johnson Architect, LLC

TIM JOHNSON ARCHITECT, LLC

PRELIMINARY DWG. SET

DRAWING TITLE

NORTHEAST (STREET) ELEVATION

DATE: 03/01/16 | SC: 3/16" = 1'-0"

A11

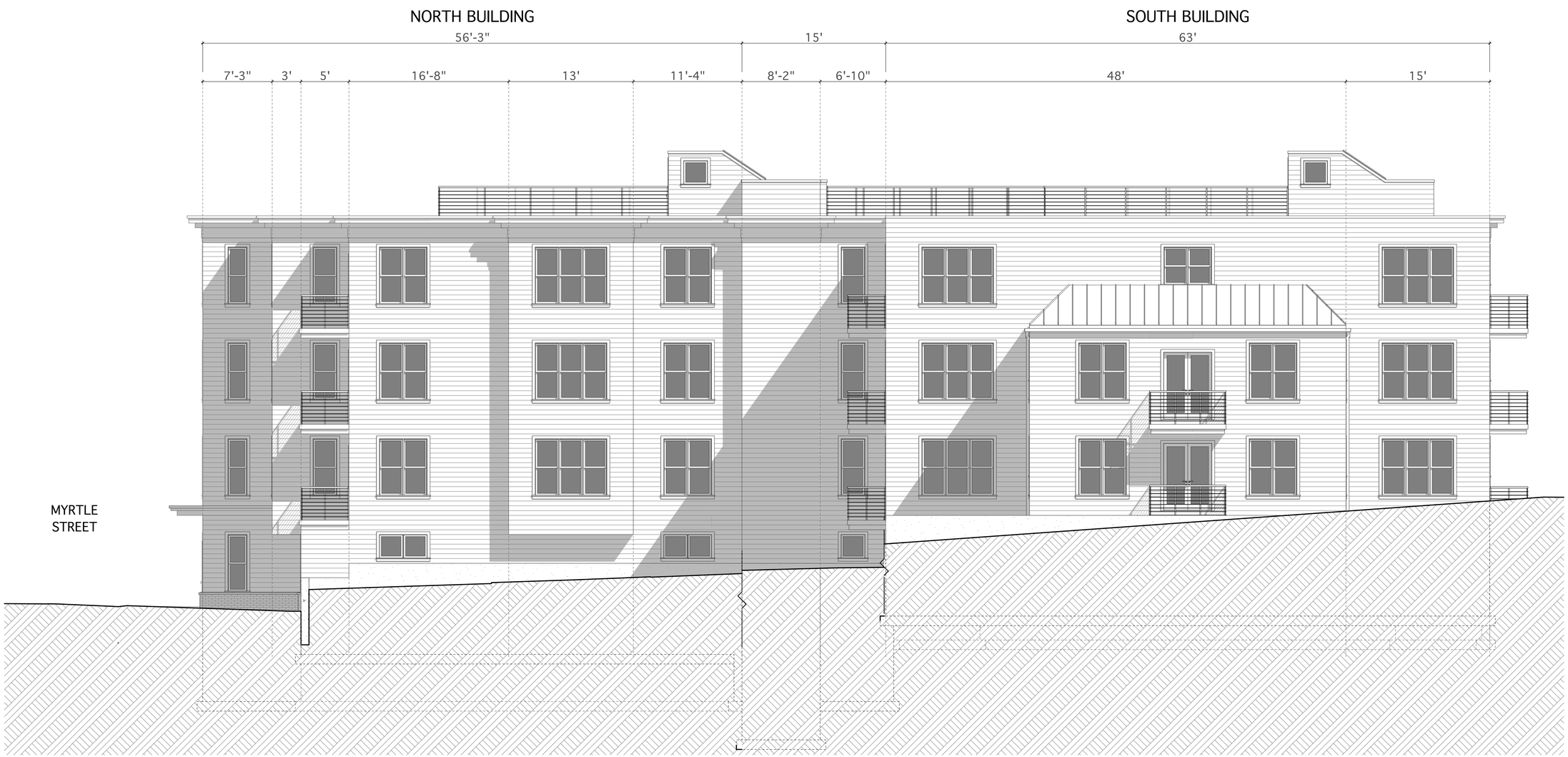

SOUTHWEST ELEVATION

0 2' 4' 8'

ATTORNEY:
WILLIAM H. KEENER, ESQ.
1145E HANCOCK STREET
QUINCY, MA 02169
TEL: 617-786-0281

LAND SURVEYOR:
NEPONSET VALLEY SURVEY
ASSOC., INC.
95 WHITE STREET
QUINCY, MA 02169
TEL: 617-472-4867

CIVIL ENGINEER:
JOYCE CONSULTING GROUP, INC.
100 WYMAN ROAD
BRAINTREE, MA 02184
TEL: 781-817-6120

PROJECT ARCHITECT:
TIM JOHNSON ARCHITECT, LLC
190 OLD COLONY AVENUE
BOSTON, MA 02127
TEL: 617-464-4363

STRUCTURAL ENGINEER:
WEBB STRUCTURAL SERVICES, INC.
670 MAIN STREET
READING, MA 01867
TEL: 781-779-1330

PROPOSED 20-UNIT
RESIDENTIAL DEVELOPMENT
W/ 29 PARKING SPACES
151 HANCOCK STREET
QUINCY, MA 02171

OWNER:
BROMFIELD DEVELOPMENT, LLC
314 WEST BROADWAY
BOSTON, MA 02127
TEL: 617-592-5323

REVISIONS

△1	△
△	△
△	△
△	△
△	△

Tim Johnson Architect, LLC

TIM JOHNSON ARCHITECT, LLC

PRELIMINARY DWG. SET

DRAWING TITLE

SOUTHWEST ELEVATION

DATE: 03/01/16 | SC: 3/16" = 1'-0"

A12

NORTHWEST (MYRTLE STREET) ELEVATION

0 2' 4' 8'

ATTORNEY:
WILLIAM H. KEENER, ESQ.
1145E HANCOCK STREET
QUINCY, MA 02169
TEL: 617-786-0281

LAND SURVEYOR:
NEPONSET VALLEY SURVEY
ASSOC., INC.
95 WHITE STREET
QUINCY, MA 02169
TEL: 617-472-4867

CIVIL ENGINEER:
JOYCE CONSULTING GROUP, INC.
100 WYMAN ROAD
BRAINTREE, MA 02184
TEL: 781-817-6120

PROJECT ARCHITECT:
TIM JOHNSON ARCHITECT, LLC
190 OLD COLONY AVENUE
BOSTON, MA 02127
TEL: 617-464-4363

STRUCTURAL ENGINEER:
WEBB STRUCTURAL SERVICES, INC.
670 MAIN STREET
READING, MA 01867
TEL: 781-779-1330

PROPOSED 20-UNIT
RESIDENTIAL DEVELOPMENT
W/ 29 PARKING SPACES
151 HANCOCK STREET
QUINCY, MA 02171

OWNER:
BROMFIELD DEVELOPMENT, LLC
314 WEST BROADWAY
BOSTON, MA 02127
TEL: 617-592-5323

REVISIONS

1	△
△	△
△	△
△	△
△	△

Tim Johnson Architect, LLC

TIM JOHNSON ARCHITECT, LLC

PRELIMINARY DWG. SET

DRAWING TITLE

NORTHWEST ELEVATION - NORTH BUILDING

DATE: 03/01/16

SC: 3/16" = 1'-0"

A13

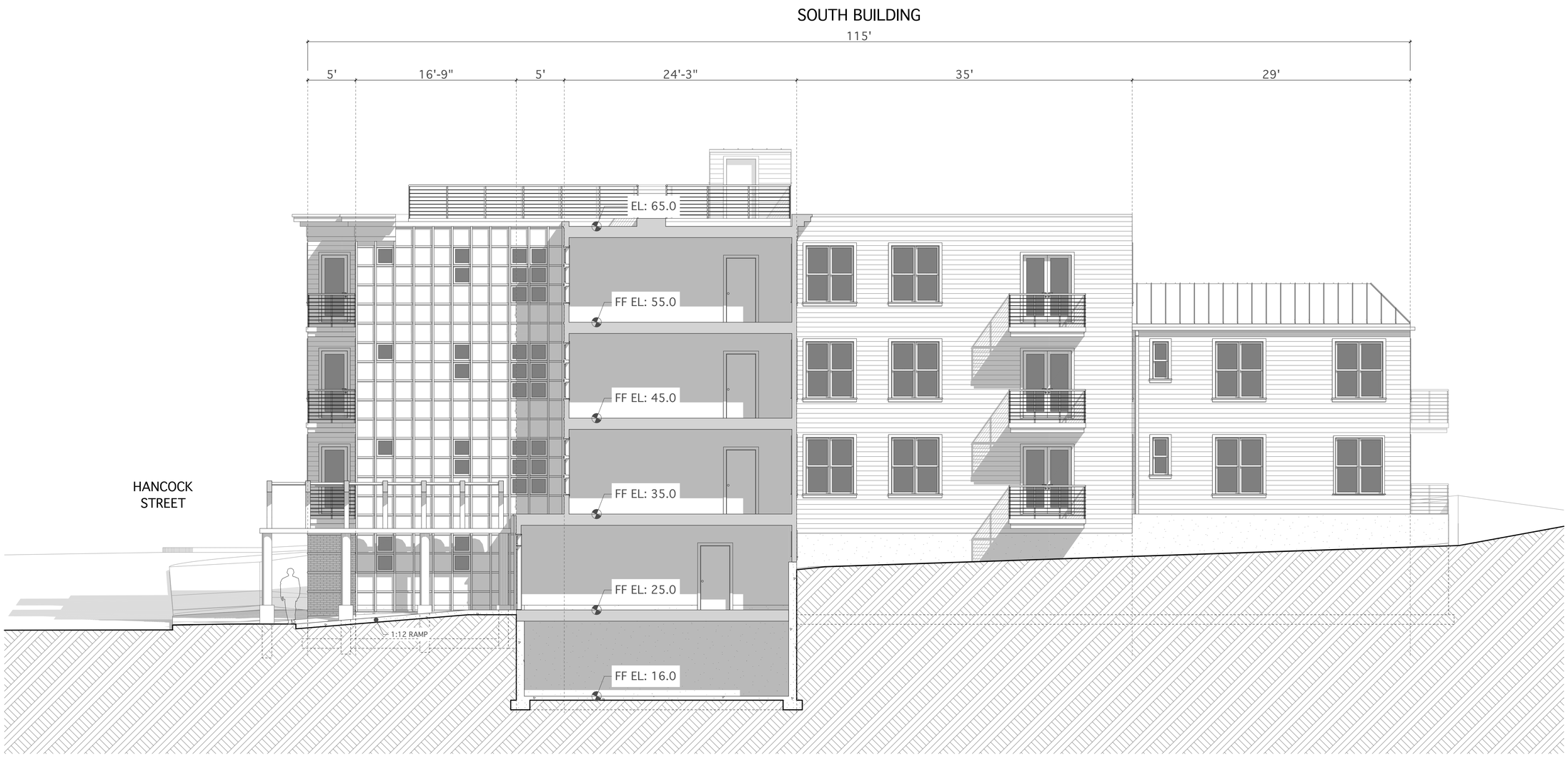

NORTHWEST ELEVATION

0 2' 4' 8'

ATTORNEY:
WILLIAM H. KEENER, ESQ.
1145E HANCOCK STREET
QUINCY, MA 02169
TEL: 617-786-0281

LAND SURVEYOR:
NEPONSET VALLEY SURVEY ASSOC., INC.
95 WHITE STREET
QUINCY, MA 02169
TEL: 617-472-4867

CIVIL ENGINEER:
JOYCE CONSULTING GROUP, INC.
100 WYMAN ROAD
BRAINTREE, MA 02184
TEL: 781-817-6120

PROJECT ARCHITECT:
TIM JOHNSON ARCHITECT, LLC
190 OLD COLONY AVENUE
BOSTON, MA 02127
TEL: 617-464-4363

STRUCTURAL ENGINEER:
WEBB STRUCTURAL SERVICES, INC.
670 MAIN STREET
READING, MA 01867
TEL: 781-779-1330

PROPOSED 20-UNIT
RESIDENTIAL DEVELOPMENT
W/ 29 PARKING SPACES
151 HANCOCK STREET
QUINCY, MA 02171

OWNER:
BROMFIELD DEVELOPMENT, LLC
314 WEST BROADWAY
BOSTON, MA 02127
TEL: 617-592-5323

REVISIONS

1	△
△	△
△	△
△	△
△	△

Tim Johnson Architect, LLC

TIM JOHNSON ARCHITECT, LLC

PRELIMINARY DWG. SET

DRAWING TITLE

NORTHWEST ELEVATION - SOUTH BUILDING

DATE: 03/01/16 | SC: 3/16" = 1'-0"

A14

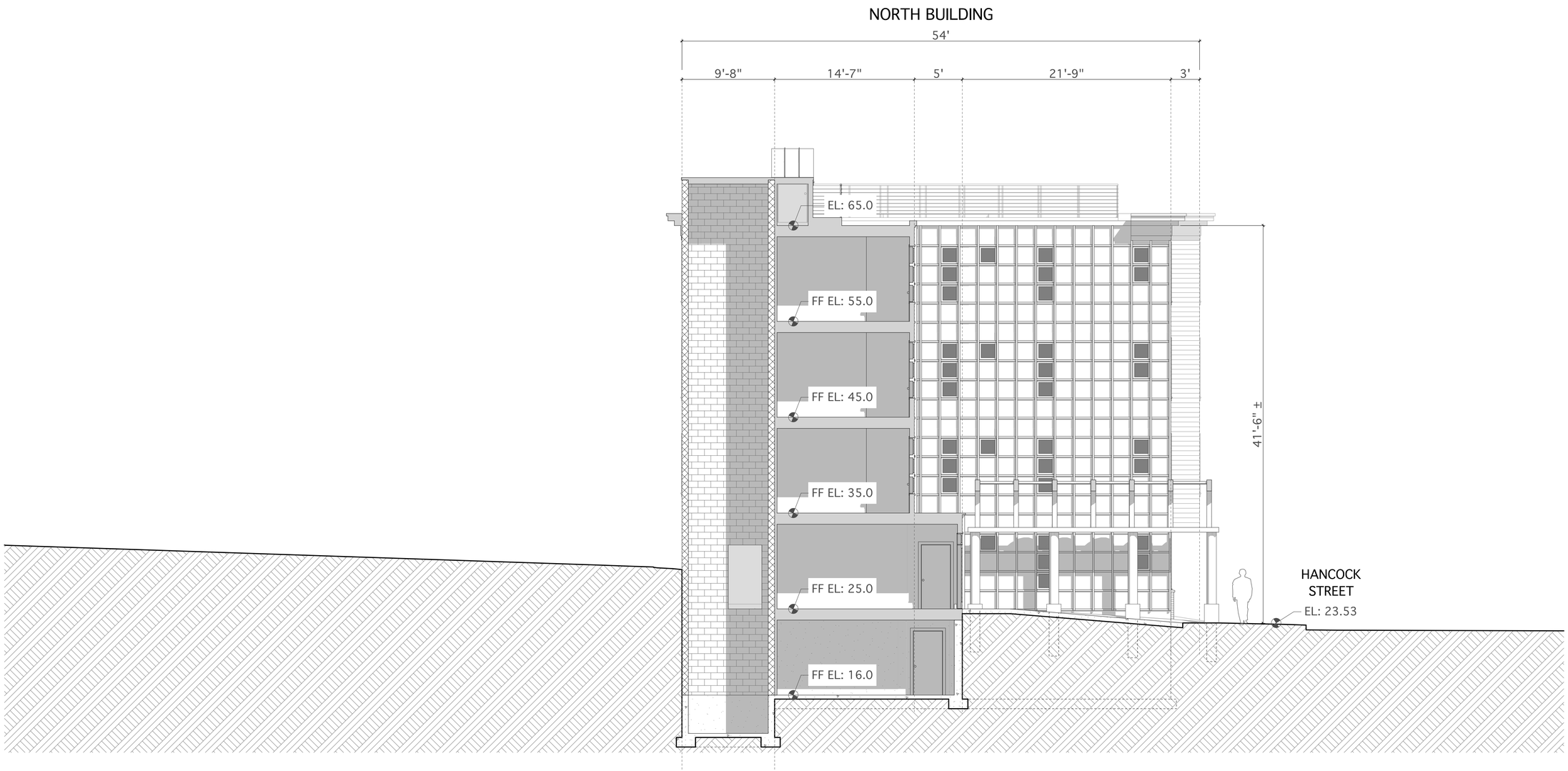

SOUTHEAST ELEVATION

0 2' 4' 8'

ATTORNEY:
WILLIAM H. KEENER, ESQ.
1145E HANCOCK STREET
QUINCY, MA 02169
TEL: 617-786-0281

LAND SURVEYOR:
NEPONSET VALLEY SURVEY
ASSOC., INC.
95 WHITE STREET
QUINCY, MA 02169
TEL: 617-472-4867

CIVIL ENGINEER:
JOYCE CONSULTING GROUP, INC.
100 WYMAN ROAD
BRAINTREE, MA 02184
TEL: 781-817-6120

PROJECT ARCHITECT:
TIM JOHNSON ARCHITECT, LLC
190 OLD COLONY AVENUE
BOSTON, MA 02127
TEL: 617-464-4363

STRUCTURAL ENGINEER:
WEBB STRUCTURAL SERVICES, INC.
670 MAIN STREET
READING, MA 01867
TEL: 781-779-1330

PROPOSED 20-UNIT
RESIDENTIAL DEVELOPMENT
W/ 29 PARKING SPACES
151 HANCOCK STREET
QUINCY, MA 02171

OWNER:
BROMFIELD DEVELOPMENT, LLC
314 WEST BROADWAY
BOSTON, MA 02127
TEL: 617-592-5323

REVISIONS

1	△
△	△
△	△
△	△
△	△

Tim Johnson Architect, LLC

TIM JOHNSON ARCHITECT, LLC

PRELIMINARY DWG. SET

DRAWING TITLE

SOUTHEAST ELEVATION - NORTH BUILDING

DATE: 03/01/16 | SC: 3/16" = 1'-0"

A15

SOUTHEAST ELEVATION

0 2' 4' 8'

ATTORNEY:
WILLIAM H. KEENER, ESQ.
1145E HANCOCK STREET
QUINCY, MA 02169
TEL: 617-786-0281

LAND SURVEYOR:
NEPONSET VALLEY SURVEY
ASSOC., INC.
95 WHITE STREET
QUINCY, MA 02169
TEL: 617-472-4867

CIVIL ENGINEER:
JOYCE CONSULTING GROUP, INC.
100 WYMAN ROAD
BRAINTREE, MA 02184
TEL: 781-817-6120

PROJECT ARCHITECT:
TIM JOHNSON ARCHITECT, LLC
190 OLD COLONY AVENUE
BOSTON, MA 02127
TEL: 617-464-4363

STRUCTURAL ENGINEER:
WEBB STRUCTURAL SERVICES, INC.
670 MAIN STREET
READING, MA 01867
TEL: 781-779-1330

PROPOSED 20-UNIT
RESIDENTIAL DEVELOPMENT
W/ 29 PARKING SPACES
151 HANCOCK STREET
QUINCY, MA 02171

OWNER:
BROMFIELD DEVELOPMENT, LLC
314 WEST BROADWAY
BOSTON, MA 02127
TEL: 617-592-5323

REVISIONS

1	△
△	△
△	△
△	△
△	△

Tim Johnson Architect, LLC

TIM JOHNSON ARCHITECT, LLC

PRELIMINARY DWG. SET

DRAWING TITLE

SOUTHEAST ELEVATION - SOUTH BUILDING

DATE: 03/01/16 | SC: 3/16" = 1'-0"

A16

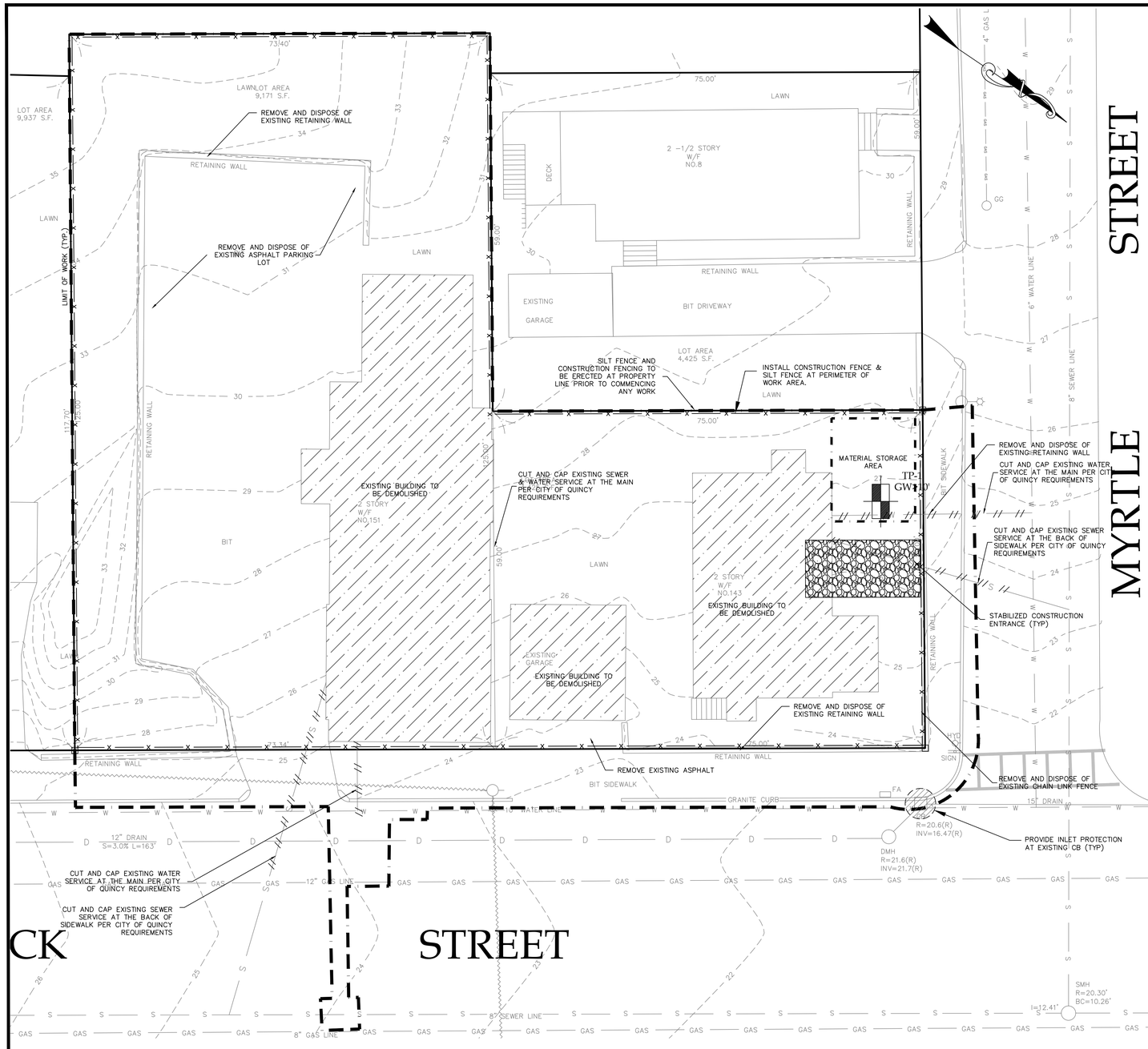

SITE PREPARATION & EROSION CONTROL NOTES

1. CONTRACTOR SHALL CLEAR THE PERIMETER OF THE CONSTRUCTION AREA AND PLACE EROSION CONTROL MEASURES PRIOR TO COMMENCING WORK. EROSION CONTROL DEVICES TO BE MAINTAINED BY THE CONTRACTOR UNTIL GROUND COVER HAS BEEN ESTABLISHED. CRUSHED STONE STABILIZATION PAD TO BE PLACED AT THE CONSTRUCTION ENTRANCE. IF BUILDING AND SITE WORK TO BE PHASED, CLEARING LIMITS SHOULD NOT EXCEED AREA NECESSARY TO CONSTRUCT EACH PHASE OF CONSTRUCTION.

2. AS EARTHWORK IS IN PROGRESS EROSION CONTROL DEVICES SHALL BE INSTALLED AS SLOPES ARE DISTURBED OR CREATED. SLOPES SHALL BE STABILIZED AS SOON AS WORK ON THEM IS COMPLETED. SLOPES AT 3:1 OR GREATER SHALL BE TRACKED AND SEEDED. SLOPES SHALL BE SEEDED AS SOON AS POSSIBLE AFTER COMPLETION OF WORK.

3. IN AREAS WHERE SOIL DISTURBANCE ACTIVITY HAS BEEN TEMPORARILY OR PERMANENTLY CEASED, TEMPORARY OR PERMANENT SOIL STABILIZATION MEASURES SHALL BE INSTALLED AND/OR IMPLEMENTED WITHIN 7 DAYS FROM THE DATE THE SOIL DISTURBANCE ACTIVITY CEASED.

4. UPON COMPLETION OF THE EARTHWORK, THE CONTRACTOR SHALL PROCEED WITH THE INSTALLATION OF ALL UNDERGROUND UTILITIES AND PLACE SILT SACKS IN NEW INLETS AS SHOWN ON THE PLANS. THE CONTRACTOR SHALL NOTIFY THE APPROPRIATE AGENCY PRIOR TO MAKING CONNECTION OR ALTERING ANY EXISTING UTILITIES.

5. DURING CONSTRUCTION, THE CONTRACTOR WILL BE RESPONSIBLE FOR REPLACING ANY SILT FENCING, CHECK DAMS OR CATCH BASIN/YARD INLET PROTECTIONS WHICH BECOME CLOGGED, INOPERABLE OR DAMAGED. SILT FENCE SHALL BE INSPECTED AFTER RAINFALL EVENTS. ALL EROSION AND SILTATION CONTROLS INCLUDING SILT FENCING, CHECK DAMS, INLET PROTECTION AND DESILTATION SINKS WILL BE INSPECTED AFTER A STORM EVENT AND REQUIRED REPAIRS WILL BE MADE IMMEDIATELY.

6. CRUSHED STONE PAD SHALL BE INSTALLED AT CONSTRUCTION ENTRANCE TO PROVIDE A STABILIZED ENTRANCE POINT. (SEE DETAIL)

7. ANY SILT OR SEDIMENT ACCUMULATED IN EXISTING SWALES, STORM SEWERS, STREET AND/ OR GUTTERS SHALL BE CLEANED OUT DURING CONSTRUCTION.

GENERAL NOTES

1. TOPOGRAPHIC DATA, PROPERTY LINE INFORMATION, AND EXISTING SITE FEATURES WERE OBTAINED FROM A PLAN PREPARED BY NEPONSET VALLEY SURVEY ASSOC., INC..

2. THE CONTRACTOR SHALL COMPLY WITH MASSACHUSETTS GENERAL LAWS CHAPTER 82, SECTION 40, AS AMENDED, WHICH STATES THAT NO ONE MAY EXCAVATE IN THE COMMONWEALTH OF MASSACHUSETTS EXCEPT IN AN EMERGENCY WITHOUT 72 HOURS NOTICE, EXCLUSIVE OF SATURDAYS, SUNDAYS, AND LEGAL HOLIDAYS, TO NATURAL GAS PIPELINE COMPANIES, AND MUNICIPAL UTILITY DEPARTMENTS THAT SUPPLY GAS, ELECTRICITY, TELEPHONE, OR CABLE TELEVISION SERVICE IN OR TO THE CITY OR TOWN WHERE THE EXCAVATION IS TO BE MADE. THE CONTRACTOR SHALL CALL "DIG SAFE" AT 1-888-DIG-SAFE.

3. ALL UTILITY CONNECTIONS ARE SUBJECT TO THE APPROVAL OF, AND GRANTING OF PERMITS BY, THE CITY OF QUINCY. IT SHALL BE THE RESPONSIBILITY OF THE GENERAL CONTRACTOR TO SEE THAT ALL PERMITS AND APPROVALS ARE OBTAINED BEFORE STARTING CONSTRUCTION. THE CONTRACTOR SHALL BE SOLELY RESPONSIBLE FOR MAKING ALL NECESSARY ARRANGEMENTS FOR AND FOR PERFORMING ANY NECESSARY WORK INVOLVED IN CONNECTION WITH THE DISCONTINUANCE OF ANY UTILITIES OR WITHIN THE JURISDICTION OF ANY UTILITY COMPANIES, SUCH AS ELECTRICITY, TELEPHONE, WATER, GAS, AND ANY SYSTEM OR SYSTEMS WHICH WILL BE AFFECTED BY THE WORK TO BE PERFORMED UNDER THIS CONTRACT. THE CONTRACTOR SHALL NOTIFY ALL APPROPRIATE AGENCIES, DEPARTMENTS, AND UTILITY COMPANIES, IN WRITING, AT LEAST 48 HOURS AND NOT MORE THAN 30 DAYS PRIOR TO ANY CONSTRUCTION. CONSTRUCTION SHALL NOT INTERFERE WITH OR INTERRUPT UTILITIES WHICH ARE TO REMAIN IN OPERATION.

4. THE CONTRACTOR SHALL COMPLY WITH ALL APPLICABLE FEDERAL, STATE, AND LOCAL LAWS, RULES, REGULATIONS AND SAFETY CODES IN THE CONSTRUCTION OF ALL IMPROVEMENTS.

5. THE CONTRACTOR SHALL TAKE ADEQUATE PRECAUTIONS TO PROTECT ALL WALKS, GRADING, SIDEWALKS AND SITE DETAILS OUTSIDE OF THE LIMITS OF REGRADING AND WORK AS SHOWN ON THE DRAWINGS AND SHALL REPAIR AND REPLACE OR OTHERWISE MAKE GOOD AS DIRECTED BY THE ENGINEER OR OWNER'S DESIGNATED REPRESENTATIVE ANY SUCH OR OTHER DAMAGE SO CAUSED. CONTRACTOR SHALL ENSURE ADEQUATE ACCESS TO NEWBURY STREET RIGHT OF WAY AND ACCESS POINTS FOR ABUTTERS AT ALL TIMES DURING CONSTRUCTION.

6. THE CONTRACTOR SHALL REMOVE FROM THE SITE ALL RUBBISH AND DEBRIS FOUND THEREON. STORAGE OF SUCH MATERIALS ON THE PROJECT SITE WILL NOT BE PERMITTED. THE CONTRACTOR SHALL LEAVE THE SITE IN SAFE, CLEAN, AND LEVEL CONDITION UPON COMPLETION OF THE SITE CLEARANCE WORK.

7. THE CONTRACTOR SHALL REMOVE FROM THE AREA OF CONSTRUCTION PAVEMENT, CONCRETE, GRANITE CURBING, CEMENT CURBING, POLES AND FOUNDATIONS, ISLANDS, TREE BERMS AND OTHER FEATURES WITHIN THE LIMITS OF CONSTRUCTION AS REQUIRED TO ACCOMMODATE NEW CONSTRUCTION WHETHER SPECIFIED ON THE DRAWINGS OR NOT.

8. FOR SITE MATERIALS, PLANTING MATERIALS AND LOAM, GROUND COVER, AND DETAILS SEE LANDSCAPE ARCHITECT'S DRAWINGS AND SPECIFICATIONS.

9. ALL WATER, SEWER, AND DRAIN WORK SHALL BE PERFORMED ACCORDING TO THE REQUIREMENTS AND STANDARD SPECIFICATIONS OF THE CITY OF QUINCY.

10. ELEVATIONS REFER TO CITY OF QUINCY DATUM.

11. GAS, TELEPHONE, ELECTRIC, AND CABLE SERVICES ARE TO BE DESIGNED BY EACH UTILITY COMPANY IN COORDINATION WITH THE MECHANICAL, ELECTRIC AND PLUMBING CONSULTANTS. THE CONTRACTOR SHALL COORDINATE CONSTRUCTION ACTIVITIES AND DESIGN OF NEW UTILITIES WITH ELECTRIC, CABLE TELEVISION AND TELECOMMUNICATION UTILITIES.

12. UTILITY STRUCTURES TO BE ABANDONED SHALL BE REMOVED TO A DEPTH OF NO LESS THAN 3 FEET BELOW FINISHED GRADE, THE BOTTOMS OF THE STRUCTURES SHALL BE BROKEN AND THE STRUCTURES SHALL BE BACKFILLED WITH GRAVEL BORROW AND COMPACTED.

13. CONTRACTOR SHALL MAINTAIN ALL EXISTING UTILITIES EXCEPT THOSE NOTED TO BE ABANDONED OR REMOVED & DISPOSED.

14. THE GENERAL CONTRACTOR IS RESPONSIBLE FOR TRENCHING, BACKFILLING, AND SURFACE RESTORATION FOR THE GAS LINE INSTALLATION.

15. ALL GRATES IN WALKWAYS SHALL BE ADA COMPLIANT.

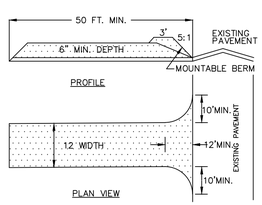

1. STONE SIZE – USE #2 STONE
2. THICKNESS – NOT LESS THAN 6 (SIX) INCHES.
3. WIDTH – FULL ENTRANCE WIDTH
4. USE FILTER FABRIC UNDER STONE FOR ENTRANCE STABILITY.
5. MAINTENANCE – THE CONTRACTOR SHALL MAINTAIN THE ENTRANCE IN A CONDITION WHICH WILL PREVENT TRACKING OR SEDIMENT FLOW ONTO A PUBLIC ROADWAY.
6. WHEN ROADWAY WASHING IS REQUIRED, IT SHALL BE DONE IN A MANNER THAT DIRECTS SEDIMENT RUNOFF TOWARDS EROSION CONTROL DEVICES. INSTALL ADDITIONAL EROSION CONTROLS, IF NEEDED.
7. PERIODIC INSPECTION AND MAINTENANCE SHALL BE PROVIDED AFTER EACH RAINSTORM.

STABILIZED CONSTRUCTION ENTRANCE DETAILS

NOT TO SCALE

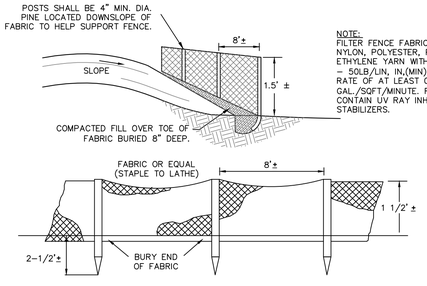

NOTE:
FILTER FENCE FABRIC SHALL BE OF NYLON, POLYESTER, PROPYLENE, OR ETHYLENE YARN WITH EXTRA STRENGTH – 50LB/LIN. IN.(MIN), WITH A FLOW RATE OF AT LEAST 0.3 GAL./SQFT/MINUTE. FABRIC SHOULD CONTAIN UV RAY INHIBITORS AND STABILIZERS.

SILT FENCE DETAIL

NOT TO SCALE

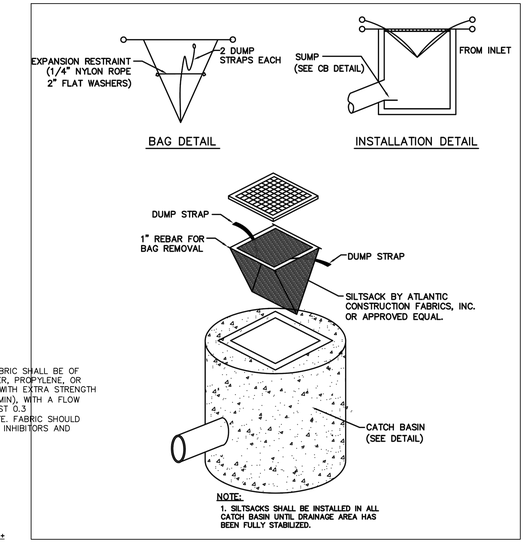

NOTE:
1. SILTSACKS SHALL BE INSTALLED IN ALL CATCH BASIN UNTIL DRAINAGE AREA HAS BEEN FULLY STABILIZED.

SILT SACK DETAIL

NOT TO SCALE

COMMONWEALTH OF MASSACHUSETTS
MICHAEL G. JOYCE
CIVIL
No. 47855
REGISTERED PROFESSIONAL ENGINEER
03.01.16

JOYCE CONSULTING GROUP, INC.
100 WYMAN ROAD
BRAINTREE, MA 02184

781-817-6120
hello@joycecg.com

"Copyright 2016" Joyce Consulting Group, Inc. All rights reserved unauthorized duplication is a violation of all applicable laws.

LEGEND

W	EX. WATER	WV	WATER VALVE
S	EX. SEWER	HY	HYDRANT
D	EX. DRAIN	SMH	SEWER MANHOLE
E	EX. ELECT	TMH	TELEPHONE MANHOLE
T	EX. TEL	CB	EX. CATCH BASIN
G	EX. GAS	EH	EX. HANDHOLE
LP	LIGHT POLE	UP	UTILITY POLE
DMH	DRAIN MANHOLE	GV	GAS VALVE
EMH	ELECTRIC MANHOLE		
VGC	VERTICAL GRANITE CURB		
FGC	FLUSH GRANITE CURB		
CRTW	CONCRETE RETAINING WALL		

SCALE 1"=10' | JOB NO. JCG 15-050
DATE 12-16-15

REVISIONS

NO.	DATE	REVISION	BY
1	03-01-16	REVISED BUILDING LAYOUT AND DRAINAGE DESIGN	MGJ

PLAN TITLE:
SITE PREPARATION AND DEMO PLAN
151 HANCOCK STREET
QUINCY, MASSACHUSETTS

PREPARED FOR:
BROMFIELD DEVELOPMENT, LLC
314 WEST BROADWAY
BOSTON, MASSACHUSETTS 02127

C-0

SHEET 1 OF 4

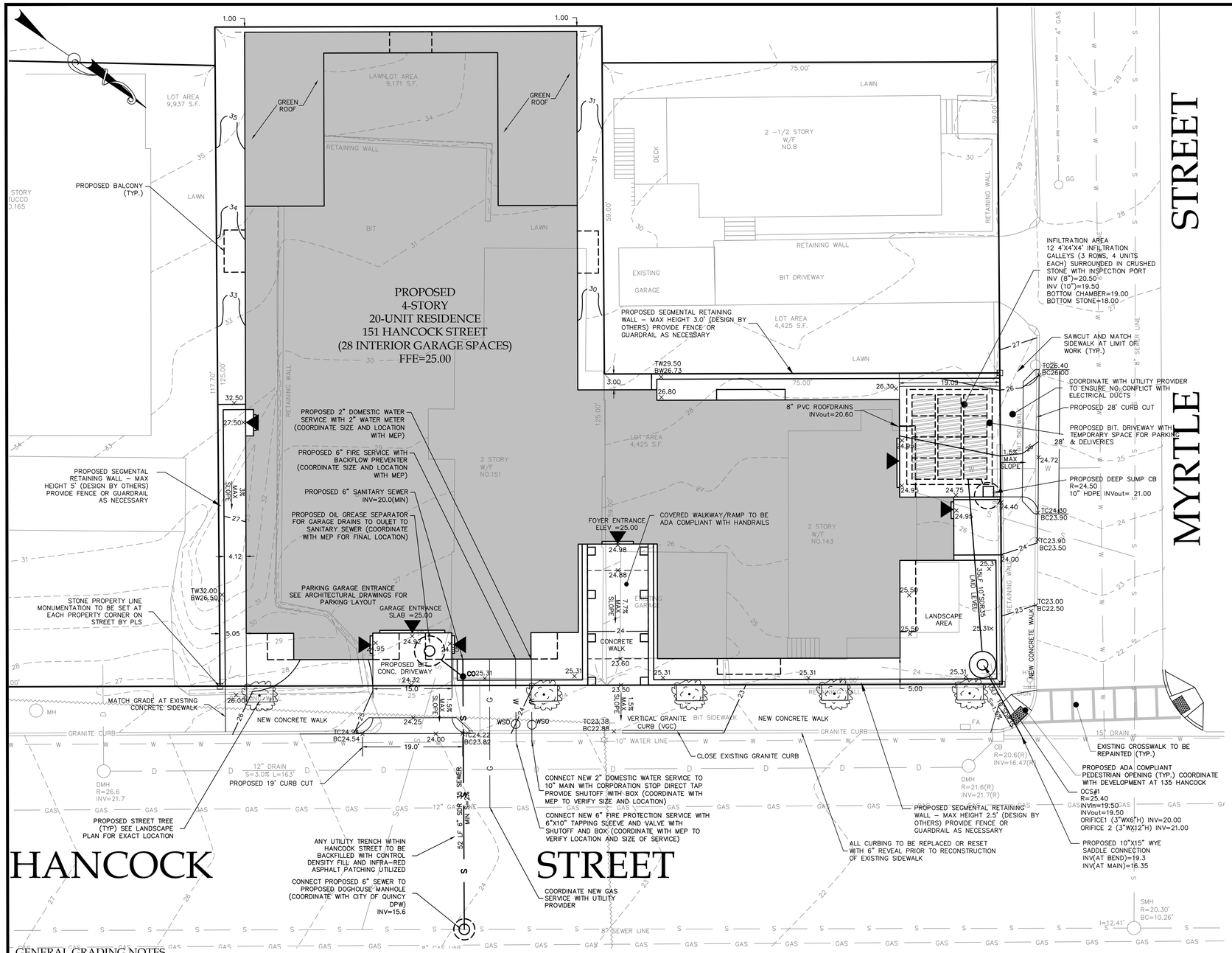

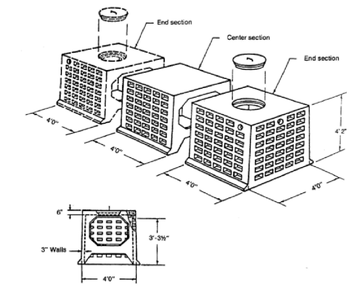

NOTES:

1. SCITUATE PRECAST 4'X4'X4' CHAMBER WITH H-20 LOADING OR APPROVED EQUAL.
2. ALL RECHARGE BASINS MUST BE INSTALLED IN ACCORDANCE WITH ALL APPLICABLE LOCAL, STATE AND FEDERAL REGULATIONS.
3. ALL STONE AGGREGATE USED IN CONSTRUCTION OF THE RECHARGE BASIN SHALL BE 1½" TO 2" NOMINAL DIAMETER AND DOUBLE WASHED. USING CRUSHED STONE IS NOT PERMITTED.
4. THE DRAINAGE SYSTEMS SHALL BE INSTALLED IN WELL DRAINING SOIL MATERIALS. ANY DELETERIOUS MATERIAL BELOW OR AROUND THE DRAINAGE STRUCTURES SHALL BE REMOVED. IF DELETERIOUS MATERIAL IS ENCOUNTERED, THE CONTRACTOR SHALL NOTIFY THE DESIGN ENGINEER.

LEACHING GALLEY DETAIL

N.T.S.

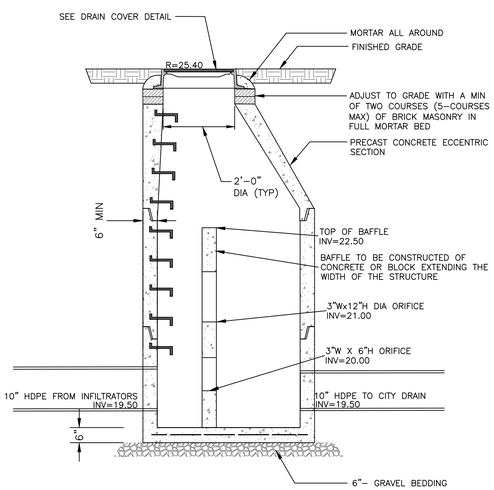

NOTES:

1. FOR MANHOLES WITH DIAMETERS GREATER THAN 4' THE WALL AND BASE THICKNESS SHALL BE PER PRECAST MANUFACTURER'S STANDARD STRUCTURE FOR THE INDICATED DIAMETER. IN ADDITION THE MANUFACTURER'S STANDARD REDUCER SECTION FOR EACH DIAMETER SHALL BE USED WHERE REQUIRED TO MEET 4' DIAMETER ECCENTRIC CONE.
2. PROVIDE RESILIENT CONNECTOR WHERE PIPE ENTERS MANHOLE.
3. DESIGN LIVE LOAD HS20-44.

OUTLET CONTROL STRUCTURE

NOT TO SCALE

GENERAL GRADING NOTES

1. ALL PAVED AREAS MUST PITCH TO DRAIN AT A MINIMUM OF ONE-EIGHTH INCH (1/8") PER FOOT.
2. WHERE NEW PAVING MEETS EXISTING PAVING, MEET LINE AND GRADE OF EXISTING.
3. UNDERGROUND UTILITIES SHOWN AS APPROXIMATE ONLY.
4. PROVIDE POSITIVE DRAINAGE AWAY FROM FACE OF BUILDINGS AT ALL LOCATIONS.
5. ALL PROPOSED TOP OF CURB ELEVATIONS ARE SIX INCHES (6") ABOVE BOTTOM OF CURB ELEVATIONS UNLESS SHOWN OTHERWISE.
6. THE GENERAL CONTRACTOR SHALL BLEND NEW EARTHWORK SMOOTHLY INTO EXISTING EARTHWORK.
7. ALL POINTS OF CONSTRUCTION EGRESS AND/OR INGRESS SHALL BE MAINTAINED TO PREVENT TRACKING OR FLOWING OF SEDIMENT ONTO PUBLIC ROADS.
8. THE CONTRACTOR SHALL VERIFY ALL EXISTING GRADES IN THE FIELD AND REPORT ANY DISCREPANCIES IMMEDIATELY TO THE ARCHITECT PRIOR TO STARTING WORK.
9. ANY ALTERATIONS TO THESE DRAWINGS MADE IN THE FIELD DURING CONSTRUCTION SHALL BE RECORDED BY THE GENERAL CONTRACTOR AND SHARED WITH THE ARCHITECT AND ENGINEER AS REQUIRED.
10. SURPLUS MATERIALS SHALL NOT BE REMOVED FROM THE SITE UNLESS DIRECTED BY THE OWNER OR OWNER'S REPRESENTATIVE.
11. ANY AREAS OUTSIDE OF THE LIMIT-OF-WORK THAT IS DISTURBED SHALL BE RESTORED TO ITS ORIGINAL CONDITION AT NO COST TO THE OWNER.

COMMONWEALTH OF MASSACHUSETTS MICHAEL G. JOYCE CIVIL No. 47855 REGISTERED PROFESSIONAL ENGINEER
03.01.16

JOYCE CONSULTING GROUP, INC.
100 WYMAN ROAD
BRAINTREE, MA 02184

781-817-6120
hello@joycecg.com

"Copyright 2016" Joyce Consulting Group, Inc. All rights reserved unauthorized duplication is a violation of all applicable laws.

LEGEND

W	EX. WATER	WV	WATER VALVE
S	EX. SEWER	HY	HYDRANT
D	EX. DRAIN	SMH	SEWER MANHOLE
E	EX. ELECT	TMH	TELEPHONE MANHOLE
T	EX. TEL	CB	EX. CATCH BASIN
G	EX. GAS	HH	EX. HANDHOLE
LP	LIGHT POLE	UP or SP	UTILITY POLE
DMH	DRAIN MANHOLE	GV	GAS VALVE
EMH	ELECTRIC MANHOLE		
VGC	VERTICAL GRANITE CURB		
FGC	FLUSH GRANITE CURB		
CRTW	CONCRETE RETAINING WALL		

SCALE	1"=10'	JOB NO.	JCG 15-050
DATE	12-16-15		

REVISIONS

NO.	DATE	REVISION	BY
1	03-01-16	REVISED BUILDING LAYOUT AND DRAINAGE DESIGN	MGJ

PLAN TITLE:
SITE LAYOUT AND GRADING PLAN
151 HANCOCK STREET
QUINCY, MASSACHUSETTS

PREPARED FOR:
BROMFIELD DEVELOPMENT, LLC
314 WEST BROADWAY
BOSTON, MASSACHUSETTS 02127

C-1

SHEET 2 OF 4

INLET	D	A	B
4"	3'-6"ø	3'-0"	2'-6"
5"	3'-6"ø	5'-0"	4'-0"
	3'-6"x 3'-6"	4'-0"	3'-0"
	4'-0"	3'-8"	3'-0"
	4'-0"x 4'-0"	3'-0"	2'-6"
	4'-6"	3'-0"	2'-6"
6"	4'-0"ø	5'-0"	4'-6"
	4'-0"x 4'-0"	4'-0"	3'-6"
	4'-6"ø	4'-0"	3'-6"
	4'-6"x 4'-6"	3'-6"	3'-0"
	5'-0"ø	3'-6"	3'-0"
	5'-0"x 5'-0"	3'-0"	2'-6"
8"	5'-0"ø	6'-0"	5'-0"
	5'-6"x 5'-6"	4'-6"	4'-0"
	6'-0"ø	4'-0"	3'-6"
	6'-0"x 6'-0"	3'-0"	2'-6"
	6'-6"ø	3'-6"	3'-0"
	6'-6"x 6'-6"	3'-0"	2'-6"
10"	5'-6"ø	7'-6"	6'-6"
	6'-0"x 6'-0"	5'-6"	4'-6"
	6'-0"ø	6'-6"	5'-6"
	6'-6"x 6'-6"	5'-0"	4'-0"

NOTES:

FOR INLETS LARGER THAN 10" THE DESIGN AND DIMENSIONS WILL BE DETERMINED FOR EACH PARTICULAR CASE.
PRE-CAST SEPARATORS ARE TO HAVE ALL SPECIFIED HOLES EITHER CORE-BORED OR CAST IN PLACE.

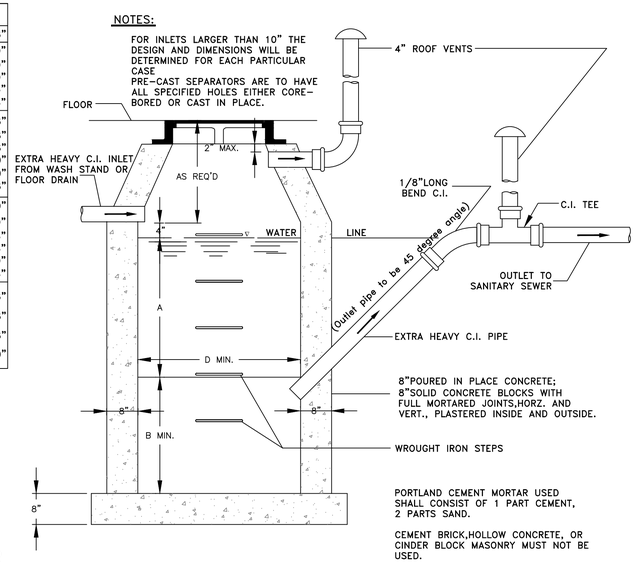

ALL INLET TRAPS TO BE PROVIDED IN ACCORDANCE WITH 248 CMR 2.00

ALUMINUM OR PLASTIC COATED WROUGHT IRON STEPS CAN BE USED.

PORTLAND CEMENT MORTAR USED SHALL CONSIST OF 1 PART CEMENT, 2 PARTS SAND.

CEMENT BRICK,HOLLOW CONCRETE, OR CINDER BLOCK MASONRY MUST NOT BE USED.

GENERAL CONSTRUCTION NOTES

BASIN TO BE LOCATED OUTSIDE OF BUILDING WHERE POSSIBLE, COVER TO HAVE A CENTER HOLE.

A TIGHT COVER MUST BE USED IF BASIN IS LOCATED INSIDE OF BUILDING.

OPENING SHALL BE NOT LESS THAN 24" DIA.

THE CATCH BASIN SHALL BE SO LOCATED AND CONSTRUCTED THAT SURFACE WATER SHALL BE EXCLUDED.

INLET PIPE SHALL BE AT LEAST FOUR INCHES ABOVE NORMAL WATER LINE.

WHERE SUBJECT TO FROST OR CRUSHING CONDITIONS, OUTLET SHALL BE AT LEAST THREE FEET BELOW THE SURFACE.

THE NEW CATCH BASIN MUST BE FILLED WITH CLEAN WATER BEFORE USING, AND AFTER BEING EMPTIED FOR PERIODIC CLEANING.

ALL OIL AND GASOLINE MUST BE REMOVED BEFORE CLEANING OUT THE BASIN, AND MUST NOT BE DISCHARGED INTO THE SEWER THROUGH OTHER FIXTURES.

SPECIFICATIONS FOR COVERING SPECIAL CASES OR CONDITIONS, SHALL BE APPROVED BY THE LOCAL AUTHORITIES, AND THE AUTHORITIES OF THE M.W.R.A.

WROUGHT IRON STEPS SHALL BE SPACED ABOUT 18" APART.

BOTH VENTS SHALL BE EXTENED INDEPENDENTLY 18" ABOVE THE ROOF, OR AS APPROVED BY THE LOCAL AUTHORITIES, AND THE AUTHORITIES OF THE M.W.R.A.

OIL/GREASE SEPARATOR DETAIL

NOT TO SCALE

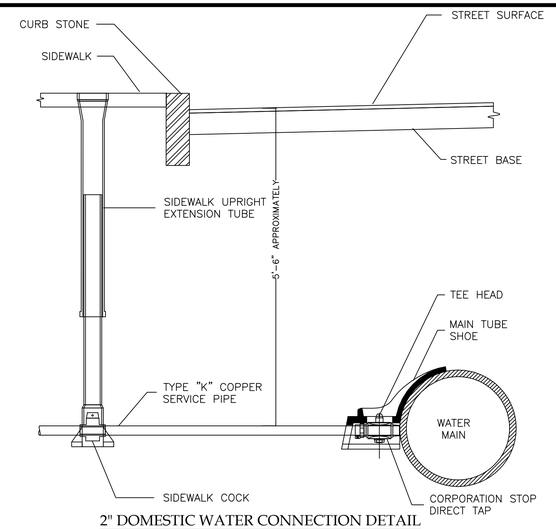

2" DOMESTIC WATER CONNECTION DETAIL

NOT TO SCALE

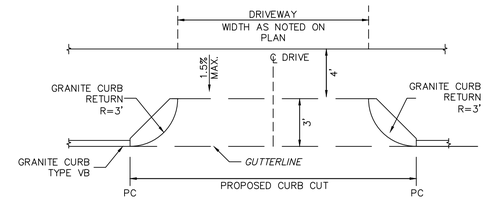

DRIVEWAYS SHALL BE CONSTRUCTED IN CONFORMANCE WITH THE CURRENT REGULATIONS OF THE ARCHITECTURAL ACCESS BOARD, THE AMERICANS WITH DISABILITIES ACT AND THE CURRENT MASSHIGHWAY CONSTRUCTION STANDARDS.

DRIVEWAY DETAIL

NOT TO SCALE

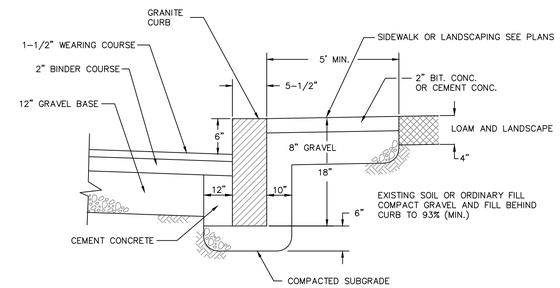

GRANITE CURB DETAIL

NOT TO SCALE

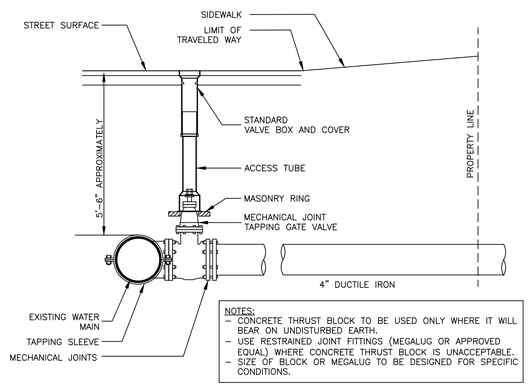

NOTES:
- CONCRETE THRUST BLOCK TO BE USED ONLY WHERE IT WILL BEAR ON UNDISTURBED EARTH.
- USE RESTRAINED JOINT FITTINGS (MEGALUG OR APPROVED EQUAL) WHERE CONCRETE THRUST BLOCK IS UNACCEPTABLE.
- SIZE OF BLOCK OR MEGALUG TO BE DESIGNED FOR SPECIFIC CONDITIONS.

4" FIRE PIPE CONNECTION DETAIL

NOT TO SCALE

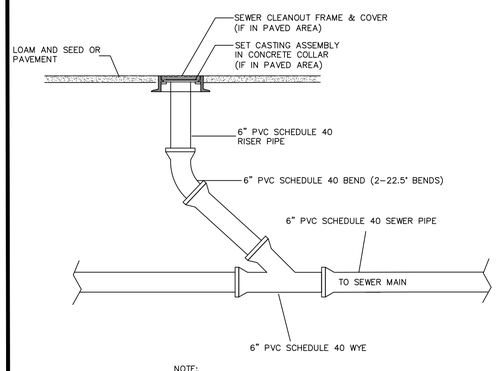

NOTE:
CLEANOUT TOP SHALL BE ENCLOSED IN CASTING AND/OR FABRICATED COVER ASSEMBLY.

NOTES:

1. SEWER CLEANOUTS SHALL BE TYPICALLY LOCATED A MINIMUM OF 10' FROM THE FOUNDATION. HOWEVER, IN SPECIAL CIRCUMSTANCES THE CLEANOUT MAY BE LOCATED WITHIN 10' OF THE FOUNDATION WITH PERMISSION OF THE ENGINEERING DEPARTMENT. THE 10' ZONE SHALL BE CONSIDERED THE DISTANCE FROM THE INSIDE FACE OF THE FOUNDATION TO A DISTANCE OF 10' OUTSIDE OF THE FOUNDATION, PERPENDICULAR TO THE INSIDE FACE OF THE FOUNDATION.
2. ALL WORK TO BE CONDUCTED WITHIN THE 10' ZONE SHALL BE PERFORMED BY A PLUMBER LICENSED IN THE STATE OF MASSACHUSETTS AND SHALL CONFORM TO 248 CMR 2.00 AND 248 CMR 10.00.

CLEANOUT DETAIL

NOT TO SCALE

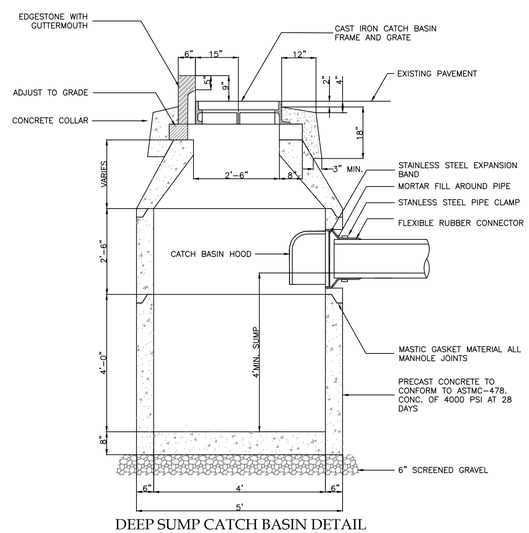

DEEP SUMP CATCH BASIN DETAIL

NOT TO SCALE

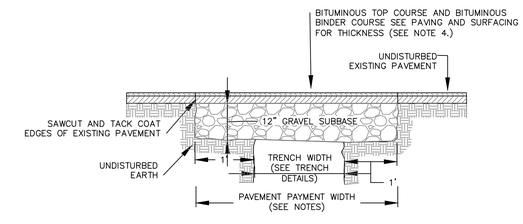

NOTES:
1. PERMANENT TRENCH PAVEMENT PAYMENT WIDTH SHALL BE THE TRENCH PAY LIMIT PLUS 2 FEET
2. TEMPORARY TRENCH PAVEMENT PAYMENT WIDTH SHALL BE EQUAL TO THE TRENCH PAYMENT LIMIT
3. REMOVE AND DISPOSE ALL TEMPORARY PAVEMENT AS REQUIRED. RESTORE AND COMPACT SUBBASE AS REQUIRED PRIOR TO PERMANENT TRENCH PAVEMENT.
4. ALL UTILITY TRENCHES IN THE PUBLIC RIGHT-OF-WAY SHALL BE BACKFILLED WITH CONTROL DENSITY FILL AND INFRA-RED PATCHING.

TRENCH PAVEMENT DETAIL

NOT TO SCALE

COMMONWEALTH OF MASSACHUSETTS
MICHAEL G. JOYCE
CIVIL
No. 47855
REGISTERED PROFESSIONAL ENGINEER
12-16-15

COMMONWEALTH OF MASSACHUSETTS
MICHAEL G. JOYCE
CIVIL
No. 47855
REGISTERED PROFESSIONAL ENGINEER
03.01.16

JCG

JOYCE CONSULTING GROUP, INC.
100 WYMAN ROAD
BRAINTREE, MA 02184

781-817-6120
hello@joycecg.com

"Copyright 2015" Joyce Consulting Group, Inc. All rights reserved unauthorized duplication is a violation of all applicable laws.

LEGEND

W	EX. WATER	WV	WATER VALVE
S	EX. SEWER		HYDRANT
D	EX. DRAIN	SMH	SEWER MANHOLE
E	EX. ELECT	TMH	TELEPHONE MANHOLE
T	EX. TEL.	CB	EX. CATCH BASIN
G	EX. GAS	HH	EX. HANDHOLE
LP	LIGHT POLE	UP	UTILITY POLE
DMH	DRAIN MANHOLE	GV	GAS VALVE
EMH	ELECTRIC MANHOLE		
VGC	VERTICAL GRANITE CURB		
FGC	FLUSH GRANITE CURB		
CRTW	CONCRETE RETAINING WALL		

SCALE N.T.S.	JOB NO. JCG 15-050
DATE 12-16-15	

REVISIONS

NO.	DATE	REVISION	BY
1	03-01-16	REVISED BUILDING LAYOUT AND DRAINAGE DESIGN	MGJ

PLAN TITLE:

DETAILS SHEET I
150 HANCOCK STREET
QUINCY, MASSACHUSETTS

PREPARED FOR:

BROMFIELD DEVELOPMENT, LLC
314 WEST BROADWAY
BOSTON, MASSACHUSETTS 02127

C-2

SHEET 3 OF 4

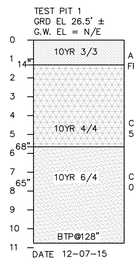

NOTES:
1. NO INDICATIONS OF ESTIMATED SEASONAL HIGH GROUNDWATER.
2. DRY TO BOTTOM OF HOLE
3. GLACIAL OUTWASH - B-HORIZON APPEARS TO HAVE BEEN STRIPPED.
4. SOIL IMPROVES WITH DEPTH CLASS A/B SOIL.

EXPLORATORY TEST-PIT LOG

NOT TO SCALE
(SEE SHEET C-0 FOR LOCATION)

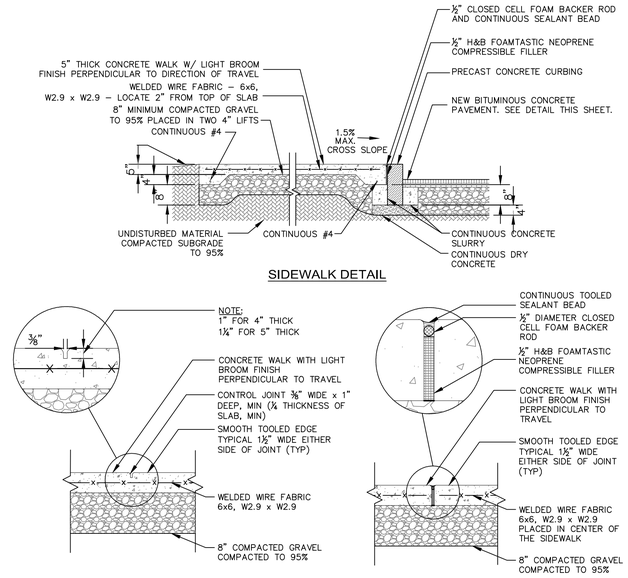

CONCRETE SIDEWALK DETAIL

NOT TO SCALE

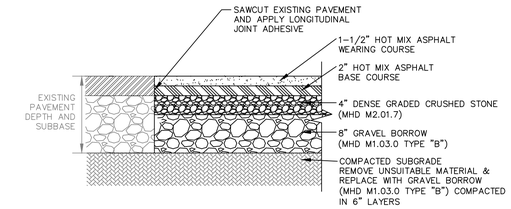

BITUMINOUS CONCRETE PAVEMENT (TWO COURSES)

NOT TO SCALE

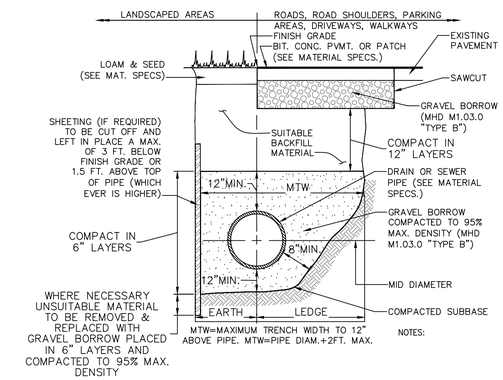

STANDARD TRENCH DETAIL FOR UTILITY PIPE

NOT TO SCALE

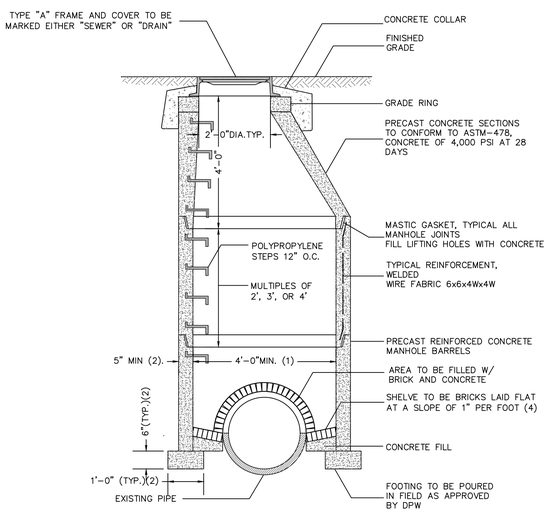

NOTES:

1. 5'-0" OR 6'-0" DIAMETER WHEN DEPTHS GREATER THAN 20 FEET OR WHEN ORDERED BY THE ENGINEER FOR PIPE SIZE
2. 6" MIN. WALL THICKNESS, 5"-0" DIAMETER MANHOLES

SEWER DOGHOUSE DETAIL

NOT TO SCALE

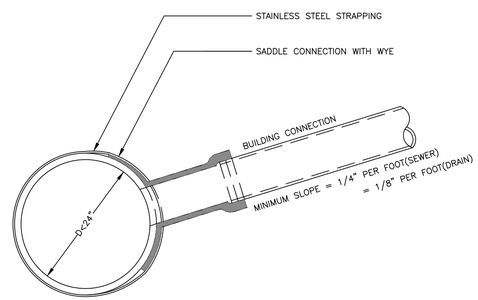

EXISTING SEWER OR DRAIN PIPE

NOTES:

1. FULL PVC OR IRON SADDLE MAY BE USED TO CONNECT TO EXISTING PVC, CLAY, CONCRETE, OR IRON PIPE.
2. SADDLES MUST HAVE RUBBER GASKETS AND SHALL BE TIGHTENED WITH STRAPS. SADDLES WILL NOT BE CEMENTED ONTO THE PIPE.
3. FULL WYE CONNECTION FITTINGS MAY BE USED
4. PIPE SHALL BE CUT TO CONFORM TO THE OPENING IN THE SADDLE.
5. CONNECTIONS DIRECTLY INTO THE EXISTING PIPE WITHOUT A SADDLE OR A FULL WYE FITTING ARE NOT ALLOWED.

DRAIN CONNECTION DETAIL

NOT TO SCALE

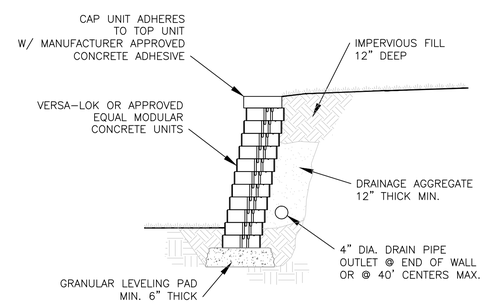

UNREINFORCED RETAINING WALL (4-FT MAX HEIGHT)

NOT TO SCALE

COMMONWEALTH OF MASSACHUSETTS
MICHAEL G. JOYCE
CIVIL
No. 47855
REGISTERED PROFESSIONAL ENGINEER
03.01.16

JOYCE CONSULTING GROUP, INC.
100 WYMAN ROAD
BRAINTREE, MA 02184

781-817-6120
hello@joycecg.com

"Copyright 2015" Joyce Consulting Group, Inc. All rights reserved unauthorized duplication is a violation of all applicable laws.

LEGEND

W	EX. WATER		WATER VALVE
S	EX. SEWER		HYDRANT
D	EX. DRAIN	SMH	SEWER MANHOLE
E	EX. ELECT	TMH	TELEPHONE MANHOLE
T	EX. TEL	CB	EX. CATCH BASIN
G	EX. GAS	HH	EX. HANDHOLE
LP	LIGHT POLE	UP or	UTILITY POLE
DMH	DRAIN MANHOLE		GAS VALVE
EMH	ELECTRIC MANHOLE		
VGC	VERTICAL GRANITE CURB		
FGC	FLUSH GRANITE CURB		
CRTW	CONCRETE RETAINING WALL		

SCALE N.T.S.	JOB NO. JCG 15-050
DATE 12-16-15	

REVISIONS

NO.	DATE	REVISION	BY
1	03-01-16	REVISED BUILDING LAYOUT AND DRAINAGE DESIGN	MGJ

PLAN TITLE:
DETAILS SHEET II
151 HANCOCK STREET
QUINCY, MASSACHUSETTS

PREPARED FOR:
BROMFIELD DEVELOPMENT, LLC
314 WEST BROADWAY
BOSTON, MASSACHUSETTS 02127

C-3