Bid Documents

City of Quincy, MA

Elm Avenue and Sea Street Water Main Replacements

July 2016

7-8-16

Weston & Sampson Engineers, Inc.
Five Centennial Drive
Peabody, MA 01960-7985

www.westonandsampson.com
Tel: 978-532-1900 Fax: 978-977-0100

TABLE OF CONTENTS

Division		Section Number
0	**BIDDING AND CONTRACT REQUIREMENTS**	
	Invitation to Bid	00100
	Instructions to Bidders	00200
	Form of General Bid	00300
	Bid Bond	00305
	Certification and Affidavits Required with Bid	00315
	Notice of Award	00410
	Agreement	00500
	Indemnity Agreement	00521
	Contractor's Certifications	00525
	Performance Bond	00540
	Payment Bond	00542
	Certificate of Insurance	00545
	Tax Compliance Certificate	00575
	Notice to Proceed	00600
	Certification of General Bidders and Sub-Bidders on Public Construction Projects	00605
	Standard General Conditions of the Construction Contract	00700
	Supplementary Conditions	00800
	Supplementary Conditions Part II	00850
	Permits	00890
1	**GENERAL REQUIREMENTS**	
	Scope and Sequence of Work	01014
	Control of Work and Materials	01110
	Special Provisions	01140
	Price Adjustments	01250
	Measurement and Payment	01270
	Submittals	01330
	Signage (Traffic Control)	01550
	Portable Changeable Message Sign	01551
	Construction Zone Safety Plan	01552
	Uniformed Officers for Temporary Traffic Control	01553
	Dust Control	01562
	Environmental Protection	01570
	Cleaning Up	01740

Division		Section Number
2	**SITE WORK**	
	Ductile Iron Pipe And Fittings for Water Mains	02080
	Abandonment of Existing Water Mains	02221
	Dewatering	02240
	Support of Excavation	02252
	Earthwork	02300
	Rock Excavation and Disposal	02324
	Temporary Water Service	02511
	Insulation For Pipelines	02513
	Hydrants and Valves	02514
	Service Connection (Water Services)	02515
	Connections to Existing Water Mains	02516
	Reconstruction of Existing Sewers and Drains	02534
	Paving	02745
	Curbing	02771
	Sidewalk Construction and Replacement	02775
	Loaming and Seeding	02920
3	**CONCRETE**	
	Field Concrete	03302
	APPENDIX A: Wage Rates	
	APPENDIX B: Sample Resident Notice	

END OF SECTION

O:\Quincy MA\FY 2016 Water Main Project\Design\Specifications\00099 TofC.docx

CITY OF QUINCY, MASSACHUSETTS
Department of Public Works

Thomas P. Koch
Mayor

Daniel G. Raymondi
Commissioner

INVITATION TO BID

The Department of Public Works for the City of Quincy, Massachusetts is seeking sealed bids for **Elm Avenue and Sea Street Water Main Replacements** until **11:30 a.m**. local time **Thursday, July 28, 2016**, in the office of the Purchasing Agent, 1305 Hancock St., Quincy, Massachusetts 02169, at which time and place all bids will be publicly opened and read aloud. Late bids delivered by mail or in person will be rejected.

The work includes the replacement of approximately 7,000 feet of 8-inch and 12-inch water main and appurtenances in Sea Street, from Winthrop Street to Ratchford Street, Winthrop Street, from Sea Street to Stoughton Street, Main Street, from Sumner Street to South Street, Winthrop Park, from Sumner Street to South Street, and Elm Avenue, from Hancock Street to Willow Street. The scope of work includes installation of water main, fire hydrants, temporary bypass, and water service renewals.

Detailed specifications are available on-line at the City of Quincy's website: www.quincyma.gov or at the Quincy City Hall, Purchasing Department, a **non-refundable printing charge of $25.00** will be applied for specifications printed and picked up at the office of the Purchasing Agent, Quincy City Hall, 1305 Hancock St. Quincy, MA 02169, business hours are 8:30 a.m. to 4:30 p.m.

All questions regarding this bid should be directed to Kathryn R. Hobin, Purchasing Agent through fax: 617-376-1074 and email to: khobin@quincyma.gov and cc: kimtrillcott@quincyma.gov. Questions will be accepted until Friday, July 22, 2016 at 12:00 p.m.

All work under this contract shall be completed within one hundred and eighty (180) calendar days, exclusive of winter shut down.

Each bid shall be accompanied by a bid security in the amount of five percent (5%) of the total value of the bid in the form of a bid bond or certified/treasurer's check.

The bidding and award of this contract shall be in full compliance with Massachusetts General Laws, Chapter 30, Section 39M, as last revised. All applicable Federal, State and City of Quincy regulations in relation to Equal Employment Opportunity and subject to the minimum wage rates set under the Massachusetts Prevailing Wage Law Chapter 149, §26. The City reserves the right to waive any informality in or to reject any or all bids when such an action is deemed in the best interests of the City.
Non-responsive, and/or unbalanced bids may be rejected.

Thomas P. Koch	Daniel G. Raymondi	Kathryn R. Hobin
Mayor	Commissioner of Public Works	Purchasing Agent

Consulting Engineer: Weston & Sampson Engineers, Inc. Five Centennial Dr. Peabody, MA 01960

	Advertise	**Req. No.**
The Quincy Sun	July 13, 2016	080714
The Central Register	July 13, 2016	

1305 Hancock St., Quincy MA 02169
Telephone: (617) 376-1060 Fax: (617) 376-1074

INSTRUCTIONS TO BIDDERS

ARTICLE 1 PROJECT IDENTIFICATION

1.1 Owner: City of Quincy, Massachusetts

1.2 Awarding Authority: **Daniel Raymondi**
Commissioner of Public Works
55 Sea Street, Quincy, MA 02169

1.3 Project Name: Elm Avenue and Sea Street Water Main Replacements

1.4 Funding:

a. The City of Quincy

b. Massachusetts Water Resources Authority (MWRA)
Local Water System Assistance Program (LWSAP)

1.5 The following Documents are required to be submitted with the Bids. Failure to comply with these requirements may render the Bid non-responsive and thus be disqualified.

a. Bid Forms (all original signatures) (Section 00300).
b. Bid Bond (Section 00305).
c. Affidavits and Certifications (Section 00315).

ARTICLE 2 QUALIFICATIONS OF BIDDERS

2.1 Bidders may be investigated by the City to determine if they are qualified to perform the work. Bidders shall submit within five (5) calendar days of the City's or Engineer's request, written evidence of such information and data necessary to make this determination.

2.2 The investigation of a Bidder will seek to determine whether the organization is adequate in size, is authorized to do business in the project jurisdiction, has had previous experience and whether available equipment and financial resources are adequate to assure the City that the work will be completed in accordance with the terms of the Agreement. The amount of other work to which the Bidder is already committed may also be considered.

2.3 The City reserves the right to reject any Bid if the evidence submitted by, or the investigation of such Bidder fails to satisfy the City that such Bidder is properly qualified to carry out the obligations and the work included in the Contract Documents.

ARTICLE 3 COPIES OF CONTRACT DOCUMENTS

3.1 Complete sets of Contract Documents shall be used in preparing Bids; neither the City nor the Engineer assume any responsibility for errors or misinterpretations resulting from the use of incomplete sets of Contract Documents.

3.2 The City and the Engineer in making copies of Contract Documents available do so only for the purpose of obtaining bids on the Work and do not confer a license or grant permission for any other use.

ARTICLE 4 EXAMINATION OF CONTRACT DOCUMENTS AND SITE

4.1 Before submitting a Bid, each Bidder must a.) examine the Contract Documents thoroughly, b.) visit the site to familiarize himself with local conditions that may in any manner affect cost, progress or performance of the Work, c.) familiarize himself with Federal, State and local laws, ordinances, rules and regulations that may in any manner affect cost, progress, or performance of the Work; and d.) study and carefully correlate Bidder's observations with the requirements of the Contract Documents.

4.2 All information given in the Drawings and the other Contract Documents relating to sub-surface and other conditions, natural phenomena, existing utilities, pipelines, other structures, etc. is from the best sources available to the City. All such information is furnished only for the information and convenience of the Bidders and is not guaranteed.

4.3 Before submitting the Bid, each Bidder may, at his own expense, make such additional investigations and tests as the Bidder may deem necessary to determine the accuracy of his Bid for performance of the Work in accordance with the time, price and other terms and conditions of the Contract Documents.

4.4 On request, the City will provide each Bidder access to the site to conduct such investigations and tests as each Bidder may deem necessary for submission of the Bid.

4.5 The lands upon which the work is to be performed and rights-of-way for access thereto are identified on the Drawings.

4.6 The submission of a Bid will constitute an incontrovertible representation by the Bidder that he has complied with every requirement of this Article 4 and that the Contract Documents are sufficient in scope and detail to indicate and convey understanding of all terms and conditions for performance of the Work.

ARTICLE 5 INTERPRETATIONS

5.1 All questions about meaning or intent of the Contract Documents must be directed to Kathryn

R. Hobin, Purchasing Agent through fax: 617-376-1074 and email to: khobin@quincyma.gov and cc: kimtrillcott@quincyma.gov. Questions will be accepted until Friday, July 22, 2016 at 12:00 p.m.

5.2 Written clarifications or interpretations will be issued through Addenda. No addenda, except via FAX transmission or overnight delivery, will be issued any later than five (5) calendar days before the bid opening date. Only questions answered by formal written Addenda will be binding. Oral and other clarifications or interpretations will be without legal effect. Addenda will be sent via facsimile, to all parties recorded to have received the Contract Documents.

5.3 Each Bidder shall be responsible for determining all Addenda issued have been received and incorporated into the Bid.

5.4 **A BID WHICH INCLUDES, FOR ANY ITEM, A BID PRICE THAT IS ABNORMALLY HIGH OR LOW, MAY BE REJECTED AS AN UNBALANCED BID.**

5.5 The quantities in the Bid Form are being set forth as a basis for the comparison of bids only and the actual amount of work may not correspond therewith.

5.6 The City reserves the right to delete all or any portion of the work or add new work or to decrease or increase the scope of any item of the work to be done under this Contract either prior to executing the Contract or at any time during the life of the Contract. Exercise by the City of the above rights shall not constitute any grounds or basis of claims for damages or for a loss of anticipated profits.

Also, an increase or a decrease of quantity for any bid item (regardless of its magnitude) shall not be regarded as a grounds or basis for any increase or decrease in the Contract unit prices, nor in the time allowed for the completion of the work except as provided for in the Contract.

ARTICLE 6 PRE-BID CONFERENCE: None.

ARTICLE 7 BID SECURITY

7.1 Each bid must be accompanied by a bid bond, in cash or certified check or a treasurer's/cashiers check issued by a bona fide bank or trust company, payable to the City of Quincy. The Bid Security shall be in the amount of five percent (5%) of the Total Bid Price. The Bid Security shall be sealed in a separate envelope form the Bid and then attached to the envelope containing the Bid. All Bid Securities except those of the three lowest responsible and eligible bidders will be returned within ten calendar days after the opening of bids. All Bid securities will be returned on the execution of the Agreement, or if no award is made, within sixty calendar days after the actual Bid Opening Date, unless the bid security is forfeited under the conditions stipulated herein.

7.2 In case a party to whom a Contract is awarded shall fail or neglect to execute the Agreement and furnish the satisfactory bonds within the time specified, the City may determine that the bidder has abandoned the Contract, and thereupon the Bid Forms and acceptance thereof shall be null and void, and the Bid Security accompanying the Bid Form shall be forfeited to the City as liquidated damages for such failure or neglect and to indemnify the said City for any loss which may be sustained by failure of the Bidder to execute the Agreement and furnish the bonds aforesaid, provided that the amount forfeited to the City shall not exceed the difference between the Bid Price of said Bidder and that of the next lowest responsible and eligible Bidder and provided further that, in case of death, disability or other unforeseen circumstances affecting the Bidder, such Bid Security may be returned. After execution of the Agreement and acceptance of bonds by the City, the Bid Security accompanying the Bid Form of the Successful Bidder will be returned.

ARTICLE 8 PERFORMANCE, PAYMENT AND OTHER BONDS

8.1 Performance, Payment and other required bonds and project Insurance Certificates shall be provided in accordance with Article 5 of the General Conditions of the Contract.

8.2 All Bonds required as Contract Security shall be furnished prior to the execution of the Agreement.

ARTICLE 9 BID FORMS

9.1 Each Bid shall be submitted on the Bid Form included in this Project Manual. All blank spaces for Bid prices must be filled in with unit or lump sum prices for each of the items for which the bid is requested.

9.2 Bid Forms shall be completed in ink or be typewritten. The Bid price of each item on the form shall be stated in words, and figures. Discrepancies between unit prices and their respective total amounts will be resolved in favor of the unit prices. Discrepancies between words and figures will be resolved in favor of words. Discrepancies between the indicated sum of any column of figures and correct sum thereof shall be resolved in favor of the correct arithmetic sum, based on words.

9.3 Bids by corporations shall be executed in the corporation name, by the Chief Executive Officer (or other corporate officer). The bid must be accompanied by evidence of authority to sign the bid and the corporate seal shall be affixed and attested to by the secretary. The corporate address and state of incorporation shall be shown below the signature.

9.4 Bids by partnership shall be executed in the partnership name and signed by a partner, whose title shall appear under the signature. The official address of the partnership shall be shown below the signature.

9.5 All names shall be typed or printed below the signature.

9.6 The Bid shall confirm the receipt of all Addenda. Actual number of Addenda received shall be filled in on the Bid Form.

9.7 The address and telephone number of the person to whom communications regarding the Bid are to be directed shall be shown.

9.8 Bids shall be submitted (original signatures) in a sealed opaque envelope bearing on the outside the Bidder's name, address, and the Project Title for which the Bid is submitted. If forwarded by mail, the Bid shall be enclosed in a sealed envelope with the notation **"BID ENCLOSED"** on the face and address as above. The Bid Security shall be submitted in a separate envelope from the Bid and attached to the sealed envelope containing the bid.

ARTICLE 10 RECEIPT OF BIDS

10.1 Sealed bids for the work under this Contract will be received at the time and place indicated in the Invitation to Bid.

10.2 The City may consider informal any Bid not prepared and submitted in accordance with the provisions hereof.

10.3 Bidders are cautioned that it is the responsibility of each individual Bidder to ensure that the bid is in the possession of the responsible official or a designated alternate prior to the stated time and at the place of the Bid Opening. The City is not responsible for bids delayed by mail and/or other forms of delivery.

ARTICLE 11 MODIFICATION AND WITHDRAWAL OF BIDS

11.1 Bids may be modified only by an appropriate document duly executed and delivered to the place where Bids are to be submitted at any time prior to the opening of Bids.

11.2 Bids may be withdrawn prior to the scheduled Bid Opening time or the authorized postponement thereof.

11.3 Bids, once officially opened, cannot be withdrawn and shall remain open for a <u>period of sixty (60) calendar days</u> from the date of the opening. The City, at its sole discretion, may release any bid and return the Bid Security prior to that date.

ARTICLE 12 AWARD OF CONTRACT

12.1 The Contract will be awarded to the <u>lowest responsible and eligible bidder</u> (Successful Bidder). Such a Bidder shall possess the skill, ability, job-related prior work experience, and integrity necessary for the faithful performance of the work and the bid, apart form being complete

and responsive, is the lowest in price of all the bids opened.

12.2 The City reserves the right to reject any and all Bids, to waive any and all informalities, if it is in the City's best interest to do so, and the right to disregard all nonconforming, non-responsive, unbalanced and conditional Bids.

12.3 The City also reserves the right to reject the Bid of any Bidder who is considered to be unqualified in accordance with Article 2, above.

12.4 If the Contract is to be awarded, the City will give the Successful Bidder a Notice of Award within sixty (60) calendar days after the actual Bid Opening Date. The Notice of Award will have to be formally acknowledged and accepted by the Bidder within the time period stipulated herein.

12.5 The acceptance of the above Notice of Award shall be accompanied by a complete list of sub-contractors (specialty, suppliers, and sub-consultants, etc.) selected by the Bidder to work on the project. The list shall contain information on the percentage of total work (material, labor, equipment and services) allocated to each sub-contractor.

ARTICLE 13 EXECUTION OF AGREEMENT

13.1 When the City gives a Notice of Award to the Successful Bidder, it will be accompanied by at least six (6) unsigned copies of the Agreement and all other applicable Contract Documents. Within ten (10) calendar days from the date of such notification, Contractor shall execute and return all copies of the Agreement and all other applicable Contract Documents to the City. Within ten (10) calendar days thereafter, the City will deliver one fully signed copy along with the "Notice to Proceed" to the Contractor.

13.2 If for any reason the Notice to Proceed cannot be issued within such period, the time may be extended by mutual agreement between the City and the Contractor. If the Notice to Proceed has not been issued within the ten (10) calendar days after signing of the Agreement, or within the time period mutually agreed upon, the Contractor may terminate the Agreement without further liability on the part of either party.

13.3 The Bidder's attention is directed to special requirements in relation to project construction work and completion schedule, specified in Division One - Technical Requirements Sections in this Project Manual. Each Bidder is urged to study these requirements to insure compliance with the same before submitting the Bid.

ARTICLE 14 SAFETY AND HEALTH REGULATIONS

14.1 This Project is subject to all of the Safety and Health Regulations (CFR 29, Part 1926 and all subsequent amendments) as promulgated by the U.S. Department of Labor on June 24, 1974, and CFR 29, Part 1910, General Industry Safety and Health Regulations Identified as Applicable to

Construction.

14.2 The Successful Bidder shall comply with the Department of Labor Safety and Health Regulations for Construction promulgated under the Occupational Safety and Health Act of 1970 (PL-91-596) and under Section 107 of the Contract Work Hours and Safety Standards Act (PL-91-54).

14.3 The Successful Bidder shall have a competent person or persons, as required under the Occupational Safety and Health Act on the site to inspect the Work and to supervise the conformance of the Work with the regulations of the Act.

14.4 This project is also subject to the Massachusetts Department of Labor and Industries Division of Industrial Safety "Rules and Regulations for the Prevention of Accidents in Construction Operations (Industrial Bulletin No. 12)".

ARTICLE 15 SALES TAX

15.1 The materials and supplies to be used in the Work shall be exempt from all applicable Federal, State and local sales taxes.

ARTICLE 16 UTILITY UNDERGROUND PLANT DAMAGE PREVENTION SYSTEM

16.1 All excavations within public or private ways are subject to the requirements of Massachusetts General Laws, Acts of 1983, Chapter 252, included in Part II of the Supplementary Conditions.

ARTICLE 17 WAGE RATES

17.1 All work done under this Contract shall be subject to compliance with the minimum wage rates as mandated by the Commonwealth of Massachusetts Department of Labor and Industries and the U.S. Department of Labor Wage Rates issued in the most recent wage decisions applicable to the project area.

17.2 The Commonwealth of Massachusetts Minimum Wage Rates issued under the provisions of the Massachusetts General Laws, Chapter 149, Section 26 to 27G, as amended, shall apply to the projects when the use of Federal funds is not involved on a particular project.

17.3 The Schedule of Minimum Wage Rates are included as part of this project manual and shall be strictly enforced.

17.4 It is the responsibility of the Contractor, before submitting the Bid, to verify the minimum wage rates and to request, if necessary, any additional and/or the latest information on wage rates for

all tradespeople to be employed under this contract.

ARTICLE 18 COMPETITIVE BIDDING

18.1 The Bidding and award of this contract shall be in full compliance with the Federal Procurement Act and with MGL Chapter 30, Section 39M, as last revised.

ARTICLE 19 GUARANTEES

19.1 In addition to other guarantees due the City, the Contractor guarantees that the Work and services to be performed under the Contract, and all workmanship, materials, and equipment furnished, used or installed shall be free from defects and flaws, and shall be in strict accordance with the Drawings, Specifications, and other Contract Documents. Also, the strength of all parts of all manufactured equipment shall be adequate and as specified and that the performance test requirements of the Contract shall be fulfilled. This guarantee shall be for a period of one year from and after the date of Substantial Completion and acceptance of the Work unless otherwise specified herein.
The Performance Bond shall remain in full force and effect throughout the Guarantee Period.

19.2 If at any time within the said period of guarantee, any part of the Work requires repairs, correction and/or replacement, the City may notify the Contractor in writing to make the required repairs, correction or replacement. If the Contractor neglects to commence making such repairs, corrections, or replacements to the satisfaction of the City within ten (10) days from the date of receipt of such notice, or having commenced said repairs, corrections or replacement, fails to prosecute such work with diligence, the City may employ other person(s) to make the same, and all direct and indirect costs of making said repairs, corrections or replacements, including compensation for additional professional services, shall be paid by the Contractor.

ARTICLE 20 LABOR DISPUTES

20.1 The Bidder shall submit a written statement as to whether it has been the subject of, or otherwise been involved in any labor dispute during the past five (5) years. If the bidder has been the subject of, or otherwise been involved in any labor dispute during this period, the Bidder must also provide a detailed description of each labor dispute, including the name and location of the project worked on, the nature of the dispute, the duration and dates during which the dispute took place and how the dispute was resolved. For these purposes, "labor disputes" shall include picketing or any other activity which disrupted or delayed the Work.

ARTICLE 21 RECORD KEEPING

21.1 The Contractor is reminded that the provisions of Chapter 30, Section 39R relative to record keeping apply to this Contract. A copy of c.30, s.39R is included in the Supplementary Conditions. A brief summary of the requirements is as follows:

a. The Contractor and all sub-contractors shall maintain books, records and accounts at least six (6) years after the final payment. They will be subject to inspection by the awarding authority, officers of the Inspector General, or the Deputy Commissioner of Capital Planning and Operations.

b. Any changes in record keeping or recording transactions which affect the awarding authority shall be explained along with a letter from the Contractor's independent certified public accountant approving or otherwise commenting on the change.

c. The Contractor shall file with the awarding authority a statement of management as to whether the system of internal accounting controls has been established.

d. The Contractor shall file with the awarding authority a statement prepared and signed by an independent certified public account that an examination has been made of internal accounting controls.

ARTICLE 22 LAWS AND REGULATIONS

22.1 All applicable laws, ordinances and rules and regulations of all Public Agencies having jurisdiction over construction of the project shall apply to the Contract throughout.

22.2 This project is subject to all of the OSHA Safety and Health Regulations (see CFR Part 1926/1910 and all subsequent amendments), as promulgated by the United States Department of Labor on June 24, 1974 and MGL Chapter 454 CMR 10.00, et.seq.; The Prevention of Accidents and Illnesses in Construction Operations. Contractors shall become familiar with the requirements of these regulations.

22.4 This Contract is subject to all the Federal Government, Commonwealth of Massachusetts, and City of Quincy Equal Employment Opportunity, Anti-discrimination and Affirmative Action Programs. The text of the program is set forth in these specifications. Contractor's and sub-contractors certifications will be required by the City prior to execution of the Contract.

Kathryn Hobin
Purchasing Agent

O:\Quincy MA\FY 2016 Water Main Project\Design\Specifications\00200 - REV. 2013.09.23.doc

SECTION 00300
FORM OF GENERAL BID

Proposal of _____ (hereinafter called "Bidder")*

(__) a corporation, organized and existing under the laws of the State of _____

(__) a partnership

(__) a joint venture

(__) a limited liability company

(__) an individual doing business as _____

*Insert corporation, partnership, joint venture, LLC or individual as applicable.

To the _____ (hereinafter called "Owner").

Gentlemen:

The Bidder, in compliance with your invitation for bids for construction of the Elm Avenue and Sea Street Water Main Replacements, having examined the plans and specifications with related documents and the site of the proposed work, and being familiar with all of the conditions surrounding the construction of the proposed project including the availability of materials and labor, hereby proposes to furnish all superintendence, labor, services, materials, equipment, plant, machinery, apparatus, appliances, tools, supplies, bailing, shoring, removal, and all other things necessary to construct the project in accordance with the contract documents, as prepared by Weston & Sampson Engineers, Inc., within the time set forth below, and at the prices stated below. These prices are to cover all expenses incurred in performing the work required under the contract documents, of which this bid is a part.

The Bidder hereby agrees that if selected as the Contractor it will commence work under this contract on or before a date to be fixed in the written “Notice to Proceed” given by the Owner to the Contractor and to fully complete the project within 180 calendar days of the start date fixed in the “Notice to Proceed, exclusive of winter shut down. The Bidder further agrees to pay as liquidated damages the sum of $1,000.00 for each consecutive calendar day thereafter during

which the work has not been fully completed, as provided in the “Liquidated Damages” provisions of Section 00800 SUPPLEMENTARY CONDITIONS.

Bidder acknowledges receipt of the following addenda:

No. Dated:

No. Dated:

No. Dated:

No. Dated:

The Bidder agrees to perform the work described in the specifications and shown on the plans for the following lump sum or unit prices:

Item No.	Estimated Quantity*	Brief Description Unit or Lump Sum Price Bid in Both Words and Figures	Total in Figures
1		**Water Mains and Fittings:**	
1a	3,780 l.f.	10- &12-inch ductile iron pipe and fittings, per linear foot _____ (dollars) and _____ (cents) ($ _____)	$ _____
1b	2,840 l.f.	8-inch ductile iron pipe and fittings, per linear foot _____ (dollars) and _____ (cents) ($ _____)	$ _____
1c	200 l.f.	6-inch ductile iron pipe and fittings, per linear foot _____ (dollars) and _____ (cents) ($ _____)	$ _____
1d	3,240 l.f	Polyethylene Encasement for DI Pipe, per linear foot _____ (dollars) and _____ (cents) ($ _____)	$ _____
1e	1,600 lb.	Additional fittings, per pound _____ (dollars) and _____ (cents) ($ _____)	$ _____

*Quantity assumed for comparison of bids.
** The unit price in subdivision (1) is the minimum allowed, where applicable. The bidder may add to the minimum in subdivision (2).

Item No.	Estimated Quantity*	Brief Description Unit or Lump Sum Price Bid in Both Words and Figures	Total in Figures
2		**Temporary Service Piping:**	
2a	5,920 l.f.	4-inch temporary service pipe, per linear foot _____ (dollars) and _____ (cents) ($ _____)	$ _____
2b	4,140 l.f.	2-inch temporary service pipe, per linear foot _____ (dollars) and _____ (cents) ($ _____)	$ _____
2c	1 connection	Underground connections to temporary water main, per connection _____ (dollars) and _____ (cents) ($ _____)	$ _____
3		**Pipe Insulation:**	
3a	140 l.f.	Pipe Insulation, per linear foot _____ (dollars) and _____ (cents) ($ _____)	$ _____

*Quantity assumed for comparison of bids.
** The unit price in subdivision (1) is the minimum allowed, where applicable. The bidder may add to the minimum in subdivision (2).

Item No.	Estimated Quantity*	Brief Description Unit or Lump Sum Price Bid in Both Words and Figures	Total in Figures
4		**Hydrants and Valves:**	
4a	16 hydrants	New hydrant, per hydrant (dollars) and (cents) ($)	$
4b	12 hydrants	Remove existing hydrants, per hydrant (dollars) and (cents) ($)	$
4c	33 Each	12-inch & 10-inch gate valves, per valve (dollars) and (cents) ($)	$
4d	31 Each	8-inch gate valves, per valve (dollars) and (cents) ($)	$
4e	16 Each	6-inch gate valves, per valve (dollars) and (cents) ($)	$

*Quantity assumed for comparison of bids.
** The unit price in subdivision (1) is the minimum allowed, where applicable. The bidder may add to the minimum in subdivision (2).

Item No.	Estimated Quantity*	Brief Description Unit or Lump Sum Price Bid in Both Words and Figures	Total in Figures
4f	1 Each	10-inch Insertion valves, per valve _____ (dollars and _____ (cents) ($ _____)	$ _____
4g	1 Each	8-inch Insertion valves, per valve _____ (dollars) and _____ (cents) ($ _____)	$ _____
4h	1 Each	6-inch Insertion valve, per valve _____ (dollars) and _____ (cents) ($ _____)	$ _____
5		**Service Connections:**	
5a	123 units	1-inch corporation stops, per unit _____ (dollars) and _____ (cents) ($ _____)	$ _____
5b	123 units	1-inch curb stops, per unit _____ (dollars) and _____ (cents) ($ _____)	$ _____

*Quantity assumed for comparison of bids.
** The unit price in subdivision (1) is the minimum allowed, where applicable. The bidder may add to the minimum in subdivision (2).

Item No.	Estimated Quantity*	Brief Description Unit or Lump Sum Price Bid in Both Words and Figures	Total in Figures
5c	3,090 l.f.	1-inch copper piping, per linear foot _____ (dollars) and _____ (cents) ($ _____)	$ _____
5d	3 units	1.5 & 2-inch corporation stops, per stop. _____ (dollars) and _____ (cents) ($ _____)	$ _____
5e	3 units	1.5 & 2-inch curb stops, per stop. _____ (dollars) and _____ (cents) ($ _____)	$ _____
5f	120 l.f	1.5 & 2-inch copper piping, per linear foot _____ (dollars) and _____ (cents) ($ _____)	$ _____
7		**Sewer and Drain Reconstruction:**	
7a	10 Reconstructions	Sewer and drain reconstruction within water trench limits, per reconstruction _____ (dollars) and _____ (cents) ($ _____)	$ _____

*Quantity assumed for comparison of bids.
** The unit price in subdivision (1) is the minimum allowed, where applicable. The bidder may add to the minimum in subdivision (2).

Item No.	Estimated Quantity*	Brief Description Unit or Lump Sum Price Bid in Both Words and Figures	Total in Figures
8		**Rock Excavation and Disposal:**	
8a(1)	600 cu. yd.	Rock excavation and disposal, per cubic yard (minimum)**	**$ 45,000.00**
		Seventy-Five (dollars)	
		and zero (cents)	
		($ 75.00)	
8a(2)	600 cu. yd.	Rock excavation and disposal, per cubic yard (additional)**	$
		(dollars)	
		and (cents)	
		($)	
9		**Earthwork:**	
9a(1)	300 cu. yd.	Unsuitable material above normal grade, per cubic yard (minimum)**	**$ 3,600.00**
		Twelve (dollars)	
		and zero (cents)	
		($ 12.00)	
9a(2)	300 cu. yd.	Unsuitable material above normal grade, per cubic yard (additional)**	**$**
		(dollars)	
		And (cents)	
		($)	

*Quantity assumed for comparison of bids.
** The unit price in subdivision (1) is the minimum allowed, where applicable. The bidder may add to the minimum in subdivision (2).

Item No.	Estimated Quantity*	Brief Description Unit or Lump Sum Price Bid in Both Words and Figures	Total in Figures
9b(1)	300 cu. yd.	Unsuitable material below normal grade, per cubic yard (minimum)**	**$ 3,000.00**
		Ten (dollars)	
		and zero (cents)	
		($ 10.00)	
9b(2)	300 cu. yd.	Unsuitable material below normal grade, per cubic yard (additional)**	**$**
		(dollars)	
		And (cents)	
		($)	
9c	200 cu. yd.	Additional earthwork below normal grade, per cubic yard	$
		(dollars)	
		and (cents)	
		($)	
9d(1)	150 cu. yd.	Test pits, per cubic yard (minimum)**	**$ 7,500**
		Fifty (dollars)	
		And zero (cents)	
		($ 50.00)	
9d(2)	150 cu. yd.	Test pits, per cubic yard (additional)**	$
		(dollars)	
		and (cents)	
		($)	

*Quantity assumed for comparison of bids.
** The unit price in subdivision (1) is the minimum allowed, where applicable. The bidder may add to the minimum in subdivision (2).

Item No.	Estimated Quantity*	Brief Description Unit or Lump Sum Price Bid in Both Words and Figures	Total in Figures
10		**Pavement Replacement:**	
10a	6,820 l.f.	Temporary Trench Pavement (Type 1), per linear foot _____ (dollars) and _____ (cents) ($ _____)	$ _____
10b	6,820 l.f.	Permanent Trench Pavement w/ 12" cutbacks (Type 2), per linear foot _____ (dollars) and _____ (cents) ($ _____)	$ _____
13		**Dust Control:**	
13a	1,900 pound	Calcium chloride, per pound _____ (dollars) and _____ (cents) ($ _____)	$ _____
14		**Environmental Protection:**	
14b	56 each	Catch basin protection, per catch basin _____ (dollars) and _____ (cents) ($ _____)	$ _____

*Quantity assumed for comparison of bids.
** The unit price in subdivision (1) is the minimum allowed, where applicable. The bidder may add to the minimum in subdivision (2).

Item No.	Estimated Quantity*	Brief Description Unit or Lump Sum Price Bid in Both Words and Figures	Total in Figures
15		**Price Adjustments:**	
15a	100 ton	Price Adjustment for Liquid Asphalt used in hot mix asphalt mixtures, where price variance is five (5) percent or greater, per ton Forty (dollars) and zero (cents) ($ 40.00)	**$ 4,000.00**
15b	1,620 gallon	Price Adjustment for Gasoline used in construction operations, where price variance is five (5) percent or greater, per gallon zero (dollars) And fifty (cents) ($ 0.50)	**$ 810.00**
5c	29,160 gallon	Price Adjustment for Diesel fuel used in construction operations, where price variance is five (5) percent or greater, per gallon Zero (dollars) and fifty (cents) ($ 0.50)	**$ 14,580.00**
16		**Traffic Control:**	
16a	2,100 hr.	Traffic Detail Officers, per hour Forty-four (dollars) And zero (cents) (($ 44.00))	**$ 92,400.00**

*Quantity assumed for comparison of bids.
** The unit price in subdivision (1) is the minimum allowed, where applicable. The bidder may add to the minimum in subdivision (2).

16b	360 day	Trailer-Mounted Changeable Message Sign, per calendar day	$ _____

_____
(dollars)

And _____
(cents)

($ _____)

*Quantity assumed for comparison of bids.
** The unit price in subdivision (1) is the minimum allowed, where applicable. The bidder may add to the minimum in subdivision (2).

TOTAL OF BID

The proposed contract price for all Items 1 through 16 inclusive is:

_____Dollars

and _____ Cents ($_____).

All entries shall be made clearly in ink or typewritten. Amounts are to be shown in both words and figures. In case of discrepancy between the prices written in words and those written in figures, the amount shown in words shall govern. In the event there is a discrepancy between the unit prices and the total sum of all of the items (the proposed contract price), the unit prices shall govern.

The above unit prices shall include all labor, materials, bailing, shoring, removal, overhead, profit, insurance, etc., to cover the finished work of the several kinds called for.

The Bidder understands that all bids for this project are subject to the applicable bidding laws of the Commonwealth of Massachusetts, including General Laws Chapter 30, Section 39M, as amended.

The contract will be awarded to the lowest eligible and responsible bidder.

The Bidder understands that the Owner reserves the right to reject any or all bids and to waive any informalities in the bidding.

The Bidder agrees that this bid shall be good and may not be withdrawn for a period of 30 days, Saturdays, Sundays and legal holidays excluded, after the opening of bids.

Within 10 days of receipt of the written notice of acceptance of this bid, the Bidder will execute the formal agreement attached in Section 00500 AGREEMENT.

Bid security is attached in the sum of five percent (5%) of the total bid in accordance with the conditions of Section 00200 INSTRUCTIONS TO BIDDERS. The bid security may become the property of the Owner in the event the contract and bond are not executed within the time set forth above.

The selected Contractor shall furnish a performance bond and a payment bond in an amount at least equal to one hundred percent (100%) of the contract prices in accordance with Section 00540 PERFORMANCE BOND, Section 00542 PAYMENT BOND, and as stipulated in paragraph 5.01 of Section 00700 GENERAL CONDITIONS of these specifications.

BID FORM

The Bidder hereby certifies that he is able to furnish labor that can work in harmony with all other elements of labor employed or to be employed on the work and that he will comply fully with all laws and regulations applicable to awards made in the Commonwealth of Massachusetts.

The Bidder certifies under the penalties of perjury that this bid is in all respects bona fide, fair and made without collusion or fraud with any other person. As used herein, the word "person" shall mean any natural person, joint venture, partnership, corporation, or other business or legal entity.

Interest of Officers and Employees of the City of Quincy or Members of the City Council or Other Public Officials: No officer, member or employee of the City of Quincy or its designees or agents, and no member of its governing body, and no other public official of the governing body of the locality or localities in which the project is situated or being carried out, who exercises any functions or responsibilities in the review or approval or the undertaking or carrying out of this project, shall participate in any decisions relating to this Contract, which affects his personal interest or the interest of any corporation, partnership, or association in which he is directly or indirectly interested or have any personal or pecuniary interest, direct or indirect, in this contract or the proceeds thereof.

The undersigned, as Bidder, declares that he has carefully examined the proposed form and has fully informed and satisfied himself as to the existing conditions, the character and requirements of the proposed work, the difficulties attendant upon its execution; and the accuracy of all estimated quantities stated in this bid and that he has carefully read and examined the form of contract, the standard specifications and plans therein referred to, and he proposes and agrees, if this proposal is accepted, that he will contract with the Party of the First Part to provide all necessary labor, equipment, tools, apparatus and other means of construction and to do all the work and furnish all the materials specified in the contract in the manner and time therein prescribed and according to the requirements of the City of Quincy as therein set forth and that he will take the payment therefore, the prices stated in the Bid.

The undersigned, as Bidder, declares that he understands that information relative to sub-surface and other conditions, natural phenomena, existing pipes and other structures (surface and/or sub-surface) has been furnished only for his information and convenience without any warranty or guarantee, expressed or implied, that the structures (surface and/or sub-surface) actually encountered will be the same as those shown on the drawings or in any of the other contract documents, and he agrees that he shall not use or be entitled to use any such information made available to him through the contract documents or otherwise, or obtained by him in his own examination or the site, as a basis or grounds for any claim against the City of the Engineer arising from or by reason or any variance
which may exist between the aforesaid information made available to or acquired by him and the sub-surface and/or other conditions, natural phenomena, existing pipes and other structures surface and/or sub-surface) encountered during construction, and that due allowance therefore has been made in this bid.

The undersigned, as Bidder, understands that the quantities of work tabulated in this bid or indicated on the drawings or in the specifications or other contract documents are only approximate and are subject to increase or decrease, as deemed necessary by the Engineer.

The undersigned, as Bidder, agrees that for extra work, if any, performed in accordance with the terms and provisions of the annexed form of Agreement, he will accept compensation as stipulated therein as full payment for such extra work.

If this proposal shall be accepted and the Bidder shall fail to contract as aforesaid and to give a Bond in the sum to be determined as aforesaid with surety satisfactory to the City of Quincy **within ten (10) days** from the date of the mailing of the Notice of Award from the City of Quincy to him, according to the address herewith given, the City of Quincy may, at its option, determine that the bidder has abandoned the contract, and thereupon this proposal and acceptance thereof shall be null and void, and the certified check or bid submitted covering this proposal shall become the property of the City of Quincy, otherwise said certified check or bid bond shall be returned to the Bidder.

This bid must bear the written signature of the Bidder, or an authorized agent of the bidder. If the bidder is a corporation or a partnership, the bid must be signed by a duly authorized officer of such corporation or partnership, and the title of such an officer must be stated.

The Bidder offers the following information as evidence or qualifications to perform the work as bid in accordance with the requirements of the plans and specifications.

BID FORM

RELEVANT PREVIOUS EXPERIENCE

The Bidder shall list below the relevant prior work experience on similar projects, and give references that will enable the City to evaluate his qualifications to perform the work under this Contract. The length of the relevant experience must be at least 5 years on projects of comparable size and complexity. The evaluation shall be based on prior experience, work performance and level of key personnel skills, and business standing (add additional page if necessary).

I. PROJECTS

	Completion Date	Project Name	Contract Amount	Design Engineer	Reference Name	Reference Phone No.
a.						
b.						
c.						
d.						
e.						
f.						

II. KEY PERSONNEL:

Key personnel to be employed on the job, in the event of contract award. Attach brief education and experience where applicable.

1. _____

2. _____

3. _____

4. _____

BID FORM

STATEMENT OF BIDDER'S QUALIFICATIONS

All questions must be answered and the date given must be clear and comprehensive. This statement must be notarized. If necessary, questions may be answered on separate attached sheet. The bidder may submit any additional information, if desired.

1. Name of Bidder:

2. Permanent main office address:

   a. Treasury Number (Employer's Identification No.):

3. When organized?

4. If a corporation, where incorporated?

5. How many years have you been engaged in the contracting business under your present firm or trade name?

   a. Names and home addresses of principal officers and their social security numbers: (attach separate sheet).

6. Contracts on hand: (Schedule these, showing gross amount of each contract and the approximate anticipated dates of completion. Name and address of client and name of person supervising for client.) (Attach separate sheet)

7. General character of work performed by your company?

8. Have you ever failed to complete any work awarded to your? If so, where and why?

9. Have your ever defaulted on a contract? If so, where and why?

10. List the more important contracts recently completed by you stating approximate cost of each, and the month and year completed. (Give names and addresses of client and name of person supervising for client). (See attached form.)

11. List your major equipment available for this contract. (Use separate sheet)

12. Experience in construction work similar in importance to this project. (See form)

13. Background and experience of the principle members of your organization, including the officers.

14. Credit available: $_____.

15. Give bank reference, including bank name, address, telephone and contact name.

16. Will you, upon request, fill out a detailed financial statement and furnish any other information that may be required?

17. The undersigned hereby authorizes and requests any person, firm, or corporation to furnish any information requested by the City of Quincy in verification of the recitals comprising this Statement of Bidder's Qualifications.

Dated this _____ day of _____, 20___.

Name of Bidder:_____

By:_____

Title:_____

State of _____

County of _____

_____ being duly sworn,

deposed and says that he is _____
(office)

of _____
(Name of Organization)

and that the answers to the foregoing questions and all statements contained therein are true and correct.

SUBSCRIBED AND SWORN TO, before me the _____ day of _____ , 20___

_____
(Notary Public)

Seal

My commission expires: _____

City of Quincy
Purchasing Department
1305 Hancock Street, Quincy, MA 02169

Phone: 376-1060
Fax: 376-1074

Signature Authorization

At a duly authorized meeting of the Board of Directors of

the _____
(NAME OF CORPORATION)

held on _____ at which all the Directors were present or
(DATE)

waived notice, it was VOTED, that:

_____ _____
(NAME) (OFFICER)

of this company, be and he/she hereby is authorized to execute Contracts and Bonds in the name and behalf of said Company, and affix its Corporate Seal thereto; and such execution of any Contract or obligation in this Company's name on its behalf by such _____
(OFFICER)

under seal of the Company, shall be valid and binding upon this Company. It was further voted that the City of Quincy may rely on such authorization for future Contracts until notified to the contrary.

A true copy,

ATTEST: _____
(CLERK'S SIGNATURE)

PLACE OF BUSINESS: _____

DATE OF THIS CONTRACT: _____

I hereby certify that I am the Clerk of the:

_____ that _____ is
(COMPANY) (NAME)

the duly elected _____ of said Company, and
(TITLE)

that the above VOTE has not been amended or rescinded and remains in full force and effect as of the date of this Contract.

_____ CORPORATE SEAL
(CLERK'S SIGNATURE)

4/02
REV. 12/02

CERTIFICATE OF ACKNOWLEDGEMENT
OF CONTRACTOR FOR BID

State of _____

County of _____] Date: _____ , 20_____

On this _____ day of _____ , 20_____,

before me personally appeared _____

who being duly sworn, did depose and say as follows:

_____, that said firm consists of
(Company Name)

_____
(name of principals in firm and position)

_____

_____

that he executed the foregoing instrument on behalf of said firm for the uses and purposes stated herein. If a corporation, the seal affixed to the foregoing instrument is such corporate seal and it was so affixed by order of the Board of Directors of said corporation, and that by like order, he signed thereto his name and official designation.

_____
(Notary Public)

(Seal)

My commissioner expires:_____

SIGNATURE PAGE

DATED: _____

BY: _____
(Signature and Title of Person Authorized to Sign Bid)

_____
(Name of General Bidder)

_____
(Business Address)

_____
(Social Security Number - Federal Tax ID No.)

Telephone Number: ( ) _____

(SEAL: IF BID IS BY A CORPORATION)

ATTEST: _____

The proposed surety company on the bond to be given as follows:

_____
(Contact Name)

_____
(Name of Surety)

_____
(Address of Home Office)

_____
(Massachusetts Address, if different)

_____
(Business Telephone)

O:\Quincy MA\FY 2016 Water Main Project\Design\Specifications\00300 -Form of General Bid.docx

BID BOND

KNOW ALL MEN BY THESE PRESENT, that we, the undersigned, _____

_____ as Principal and

_____ as Surety, are hereby held and firmly bound unto

_____ as OWNER in the penal sum of _____

for the payment of which, well and truly to be made, we hereby jointly and severally bind ourselves,

successors and assigns _____ .

Signed this _____ day of _____ , 20_____.

The Condition of the above obligation is such that whereas the Principal has submitted to:

_____ a certain BID, attached hereto and hereby made a part hereof

to enter into a contract in writing for the:

NOW, THEREFORE,

(A) If said BID shall be rejected, or

(B) If said BID shall be accepted and the Principal shall execute and deliver a contract in the Form of Contract attached hereto (properly completed in accordance with said BID) and shall furnish a BOND for his faithful performance of said contract, and for the payment of all persons performing labor, or furnishing materials in connection therewith, and shall in all other respects perform the agreement created by the acceptance of said BID,

then this obligation shall be void, otherwise the same shall remain in force and effect; it being expressly understood and agreed that the liability of the Surety for any and all claims hereunder shall, in no event, exceed the penal amount of this obligation as herein stated.

The Surety, for value received, hereby stipulates and agrees that the obligations of said Surety and its BOND shall in no way be impaired or affected by any extension of the time within which the OWNER may accept such BID, and said Surety does hereby waive notice of any such extension.

IN WITNESS WHEREOF, the Principal and the Surety have hereunto set their hands and seals, and such of them as are corporations have caused their corporate seals to be hereto affixed and these present to be signed by their proper officers the day and year first set forth above.

_____ (L.S.)
Principal

_____
Surety

IMPORTANT: Surety companies executing BONDS must appear on the Treasury Department's most current list (Cir. 570, as amended) and be authorized to transact business in the state where the project is located.

O:\Quincy MA\FY 2016 Water Main Project\Design\Specifications\00305.doc

RIGHT-TO-KNOW LAW

A bidder will not be eligible for award of this contract under this invitation for bids unless such bidder has submitted as part of its bid the following certification which will be deemed a part of the resulting contract.

CERTIFICATION

The Bidder hereby certifies that, if awarded this contract, he will fully comply with the Massachusetts Right-To-Know Law, c.470 of the Acts of 1983, (the Act). In addition, he shall:

1. obtain a Material Safety Data Sheet (MSDS), for all substances or mixtures of which appear on the Massachusetts Substance List that he or any of his subcontractors brings to or uses on the worksite and will keep a copy of the MSDS on the worksite of this contract;

2. label each container of a substance or mixture of substances on the Massachusetts Substance List, as required, in section 7 of the Act;

3. provide the same training and non-technical instruction that he is required to provide under section 15 of the Act to all Quincy personnel. Training shall include instructing on the nature and effects of any substance or mixture of substances listed on the Massachusetts Substance List which the Bidder or any of his subcontractors brings to or uses on the worksite.

4. provide to Quincy DPW employees on the worksite the same protective equipment that the bidder or any of his subcontractors provides to his employees.

_____
Signature of Authorized Representative of Bidder

Bidder's Name: _____

Bidder's Address: _____

NON-COLLUSION AFFIDAVIT

A bidder will not be eligible for award of this contract under this invitation for bids unless such bidder has submitted as part of its bid the following certification which will be deemed a part of the resulting contract.

State of _____

Date: _____ 20_____

County of _____

The undersigned being duly sworn, deposes and says that he is the:

_____

(sole owner, partner, president, treasurer, or other duly authorized official)

Of _____

(name of company - bidder - as appears in submitted proposal)

for work in _____ on _____

(City/Town) (Bid Opening Date)

and certifies under penalties of perjury that this bid is in all respects bona fide, fair and made without collusion or fraud with any other person. As used in this paragraph the word "person" shall mean any natural person, joint venture, partnership, corporation or other business or legal entity.

_____

Signature/Title of Person Making Affidavit

Sworn to before me this:

_____ day of _____ 20_____

_____

(Notary Public)

My commission expires: _____ 20_____

CERTIFICATION OF NON-SEGREGATED FACILITIES

The Bidder certifies that he does not maintain or provide for his employees any segregated facilities at any of his establishments, and that he does not permit his employees to perform their services at any location, under this control, where segregated facilities are maintained. The Bidder certifies further that he will not maintain or provide for his employees any segregated facilities at any of his establishments and that he will not permit his employees to perform their services at any location under his control where segregated facilities are maintained. The Bidder agrees that a breach of this certification will be a violation of the Equal Opportunity clause in any contract resulting from acceptance of this bid. As used in this certification, the term "segregated facilities" means any waiting rooms, work areas, restrooms, and washrooms, restaurants and other eating areas, timeclocks, locker rooms, and other storage or dressing areas, parking lots, drinking fountains, recreation or entertainment areas, transportation and housing facilities provided for employees which are segregated by explicit directive or are in fact segregated on the basis of race, color, religion or national origin, because of habit, local custom or otherwise. The Bidder agrees that (except where he has obtained identical certification from proposed subcontractors for specific time periods) he will obtain identical certifications from proposed subcontractors prior to the award of subcontracts exceeding $10,000.00 which are not exempt from the provisions of the Equal Opportunity clause, and that he will retain such certifications in his file.

Note: The penalty for making false statements in offers is prescribed in 18 U.S.C. ss.1001.

Date:_____, 20____ _____
(Name of Bidder)

Official Address (including Zip Code) By:_____

_____ _____
(Title)

AFFIDAVIT REGARDING PRIOR LABOR DISPUTES

The Bidder must execute and complete the following statements as to whether it has been the subject of, or otherwise been involved in, any labor dispute during the past five (5) years. If the Bidder has been the subject of, or otherwise been involved in any labor dispute during this period, the bidder must also provide a detailed description of each labor dispute, including the name and location of the project worked on, the nature of the dispute was resolved. For these purposes, "labor disputes" shall include picketing or any other activity which disrupted or delayed the work.

I _____ , being first duly sworn, do hereby depose/state:
(Name)

1. I make each of the following statements with full authorization to bind

   _____ to each of the representations made below.
   (Name of Bidder)

2. _____ has/has not been involved in a labor dispute
   (Name of Bidder)

   as described above, within the past five (5) years.

3. (Complete only if bidder has been involved in dispute).

   The dispute(s) occurred on the following project(s). (Use separate sheet if necessary)

   Name and Location of Project Date Dispute Began Date Concluded

   a. _____

   b. _____

   Attach separate sheet and give full description of the nature of each dispute and an explanation of how it was resolved. (Please give a full description below, for each such dispute).

Signed under the penalty of perjury this _____ day of _____ , 20____ .

BY:_____

on behalf of:_____
(company name)

O:\Quincy MA\FY 2016 Water Main Project\Design\Specifications\00315 - Rev 2013.09.doc

NOTICE OF AWARD

TO:_____

_____

_____

PROJECT TITLE: Elm Avenue and Sea Street Water Main Replacements

The City has considered the Bid submitted by you for the above described work in response to its Advertisements for Bids and Information for Bidders. You are hereby notified that your Bid in the amount **$**_____ has been accepted, provided you furnish the City with the required Certificates, Affidavits, Contractor's Performance and Payments Bonds and Certificate of Insurance within ten (10) days receipt of this notice to execute the Agreement. In case of failure to execute said Agreement and to furnish said bonds and documents as stipulated in the Bid Documents within ten (10) days from the date of receipt of this Notice, the City will be entitled to consider all your rights arising out of the City's acceptance of your Bid as abandoned and as a forfeiture of your bid bond. The City will also be entitled to such other rights as may be granted by law. You are required to return an acknowledged copy of the Notice of Award to the City.

Dated this the _____ day of _____, 20_____.

BY:_____

Name: Daniel G. Raymondi

Title: Commissioner of Public Works

ACCEPTANCE OF NOTICE

Receipt of the above NOTICE OF AWARD is hereby acknowledged by:

_____

(Company Name)

Signature: _____ Date:_____

Print Name: _____ Title: _____

O:\Quincy MA\FY 2016 Water Main Project\Design\Specifications\00410.doc

AGREEMENT

THIS AGREEMENT made as of the _____ day of _____ in the year 2016
by and between the City of Quincy, Massachusetts, acting through its Department of Public Works, hereinafter called the "City" and _____
with legal address and principle place of business at_____
hereinafter called the "Contractor". The City and the Contractor, in consideration of the mutual covenants hereinafter set forth, agree as follows:

ARTICLE 1 WORK

1.1 Contractor shall perform the Work as specified or indicated in the Contract Documents for the Elm Avenue and Sea Street Water Main Replacements.

ARTICLE 2 ENGINEER

2.1 The project design and construction documents have been prepared by the Weston & Sampson Engineers, Inc., Five Centennial Drive, Peabody, MA 01960.

2.2 Weston & Sampson Engineers, Inc. in conjunction with the City of Quincy Engineering Department, 55 Sea Street, Quincy, Massachusetts will act as the Engineer in connection with execution of the project work, in accordance with the Contract Documents.

ARTICLE 3 CONTRACT TIME

3.1 The total Contract Time to complete the project shall be one hundred eighty (180) calendar days, commencing ten (10) calendar days following the effective date of this Agreement. No site work shall be allowed between Thanksgiving and March 15, without permission, in writing, from the City.

3.2 The Contractor agrees that the Work shall be prosecuted regularly, diligently, and uninterrupted and at such rate of progress as will insure full completion thereof within the Contract Time stated above. It is expressly understood and agreed, by and between the contractor and the City, that the Contract Time is reasonable for the completion of the Work, taking into consideration the average climatic range and usual business/commercial and industrial activities prevailing in this locality.

ARTICLE 4 CONTRACT PRICE

4.1 The City will pay the contractor for performance of the Work in accordance with the Contract Documents, in current funds at the itemized unit or lump sum prices of work items, a total agreed sum of $_____ (state the total amount in words):

as submitted in the Contractor's Bid Form attached to the Agreement.

ARTICLE 5 APPLICATIONS FOR PAYMENT

5.1 Applications for payment shall be submitted by the Contractor and processed by the Engineer in accordance with the Conditions of the Contract included in the Contract Documents.

ARTICLE 6 PROGRESS AND FINAL PAYMENTS

6.1 The City will make progress payments on account of the Contract Price on the basis of the Contractor's Application for Payment, as recommended by the Engineer, monthly during construction as provided below. All progress payments will be on the basis of the progress of the Work measured by the schedule of values provided for in the Conditions of the Contract.

6.2 The City will make progress and final payments as provided for in the Conditions of the Contract and in accordance with the applicable Massachusetts General Laws.

ARTICLE 7 LIQUIDATED DAMAGES

7.1 The City and the Contractor recognize that time is of the essence for this Agreement and that the City will suffer financial loss if the Work is not completed within the Contract Time specified in Article 3 above, plus any extensions thereof allowed in accordance with Article 12 of the General Conditions. They also recognize the delays, expense and difficulties involved in providing, in a legal or arbitration proceeding, the actual loss suffered by the City if the Work is not completed on time. Accordingly, instead of requiring any such proof, the City and the Contractor agree that as liquidated damages or delay (but not as a penalty) the Contractor shall pay the City $ 1,000.00 per day for each calendar day of delay until the Work is complete.

7.2 Provided, that the Contractor shall not be charged with liquidated damages or any excess cost when the delay in completion of the Work is for reasons included in Article 12 of the General Conditions.

7.3 Provided further, that the Contractor shall furnish the City the required notification of such delays in accordance with the applicable Conditions of the Contract.

ARTICLE 8 ASSURANCE

8.1 The Contractor has familiarized himself with the nature and extent of the Contract Documents, Work, locality, and with all local conditions and Federal, State and local laws, ordinances, rules and regulations that in any manner may affect cost, progress or performance

of the Work.

8.2 The Contractor has studied carefully all reports of investigations and tests of sub-surface and latent physical conditions at the site or otherwise affecting cost, progress or performance of the Work which were relied upon by the Engineer in the preparation of the Drawings and Specifications and which have been identified in the Supplementary Conditions.

8.3 The Contractor has made or caused to be made examinations, investigations and tests and studies of such reports and related data in addition to those referred to in the above paragraph as he deems necessary for the performance of the work at the Contact Price within the Contact Time and in accordance with the other terms and conditions of the Contract Documents; and no additional examinations, investigations, tests, reports or similar data are or will be required by him for such purposes.

8.4 The Contractor has correlated the results of all such observations, examinations, tests, reports and data with the terms and conditions of the Contract Documents.

8.5 The Contractor has given the Engineer written notice of any conflict, error or discrepancy that he has discovered in the Contract Documents and the written resolution thereof by the Engineer is acceptable to the Contractor.

8.6 The Contractor agrees that the Contract Documents are sufficient in scope and detail to indicate and convey understanding of all terms and conditions for performance of the Work.

IN WITNESS WHEREOF, the parties hereto have executed, or caused to be executed, by their duly authorized officials, this Agreement in seven (7) copies, each of which shall be deemed an original on the date first above written. The Party of the First Part agrees to pay to the Party of the Second Part, upon satisfactory completion and delivery of the aforementioned, the sum of:

Amount in Figures: $_____

Amount in Words: _____

WITNESS:

BY:_____

Name: James Timmins

Title: City Solicitor

BY:_____

Name: Daniel G. Raymondi

Title: Commissioner of Public Works

OWNER: The City of Quincy

BY: _____

Name: Thomas P. Koch

Title: Mayor

BY:_____

Name: Kathryn R. Hobin

Title: Purchasing Agent

Contract No.:_____

P.O. No.:_____

Code:_____

The undersigned in compliance with MGL, Chapter 44, Section 31C, certifies that an appropriation in the amount required for this contract is available.

BY:_____

Name: Mark Cavanagh

Title: Director of Municipal Finance

CONTRACTOR:

BY:_____

Name:_____

Title:_____

Address:_____

_____

A. CONTRACTOR'S CERTIFICATION

A Contractor will not be eligible for award of a contract unless he has submitted the following certification, which is deemed a part of the resulting contract.

_____ certifies that:

1. it tends to use the following listed construction trades in the work under the contract:

_____

2. will comply with the minority manpower ratio and specific affirmative action steps contained herein; and

3. will obtain from each of its subcontractors and submit to the contracting administrating agency prior to the award of any subcontract under this contract the subcontractor certification required by these bid conditions.

_____
Contractor's Signature/Authorized Representative

B. SUBCONTRACTOR'S CERTIFICATION

Prior to the award of any subcontract, regardless of tier, the prospective subcontractor must execute and submit to the Prime Contractor the following certification, which will be deemed a part of the resulting subcontract.

_____ certifies that:

1. it tends to use the following listed construction trades in work under the subcontract:

   _____ ; and

2. will comply with the minority manpower ratio and specific affirmative action steps contained herein.

_____
Subcontractor's Signature

In order to ensure that said subcontractor's certification becomes a part of all subcontracts under the general contract, no subcontract shall be executed until an authorized representative of the state/municipal agency (or agencies) administering this project has determined, in writing, that said certification has been incorporated in such subcontract, regardless of tier. Any subcontract executed without such written approval may been deemed invalid.

City of Quincy
City Solicitor's Office
1305 Hancock Street
Quincy, MA 02169

Attn: Mr. James Timmins
City Solicitor

RE: Elm Avenue and Sea Street Water Main Replacements
Project Name

Dear Mr. Timmins:

Please be advised that I have reviewed the statement on internal accounting controls prepared by/for _____ (name of company), in connection with the above captioned project. This statement is required under Massachusetts General Laws, Chapter 30, Section 39R. In our opinion, representations of management are consistent with our evaluation of the system of internal accounting controls. In addition, we believe that they are reasonable with respect to transactions and assets in amounts which would be material when measured in relation to the firm's financial statements.

Yours sincerely,

_____
Certified Public Accountant

Note: This form is to be completed only when the contract exceeds $100,000. and is for the purchase of materials or for the construction, renovation, etc. of public works or public buildings.

CERTIFICATION

Internal Accounting

The Contractor certifies that it has internal accounting controls, as required by Chapter 30, Section 39R and that the Contractor will:

1. maintain accurate and detailed accounts for a six (6) year period after the final payment;

2. file regular statements of management concerning internal auditing controls;

3. file an annual audited financial statement; and

4. submit a statement from an independent certified public accountant that such CPA has examined management's internal auditing controls and expresses an opinion as to their consistency with management's statements in (2) above, and whether such statements are reasonable with respect to transactions and assets that are substantial in relation to designer's financial statements. General Laws, Chapter 7, Section 301 (e).

Signed under the pains and penalties of perjury:

_____

Name of Company

_____

Authorized Signature

Note: This form is to be completed only when the contract exceeds $100,000 and is for the purchase of materials or for the construction, renovation, etc. of public works or public buildings.

CERTIFICATE OF ACKNOWLEDGMENT OF CONTRACTOR
FOR AGREEMENT AND CONTRACT BONDS

State of _____

} Fed. Tax ID # _____

County of _____

On this _____ day of _____, 20____, before me personally

appeared _____ , who

being by me duly sworn, did depose and say as follows:

That he is _____ in the firm of
(position in the firm)

_____ , that said firm consists
(name of firm)

of _____
(name of principals in firm and positions)

_____

_____

_____

that he executed the foregoing instruments on behalf of said firm for the uses and purposes stated herein. If a corporation, that the seal affixed to the foregoing instrument is such corporate seal and it was so affixed by order of the Board of Directors of said corporation, and that by like order, he signed thereto his name and official designation.

_____

Notary Public Seal

My commission expires:_____

PERFORMANCE BOND

KNOW ALL MEN BY THESE PRESENT: That

_____
(Name of Contractor)

_____
(Address of Contractor)

a _____, hereinafter called Principal, and
(corporation, partnership, individual)

_____
(Name of Surety)

_____
(Address of Surety)

hereinafter called Surety, are held and firmly bound unto

The Department of Public Works for the City of Quincy, Massachusetts
(Name of Owner)

1305 Hancock Street Quincy, MA 02169
(Address of Owner)

hereinafter called OWNER, in the penal sum of: $ _____

_____
Dollars

in lawful money of the United States, for the payment of which sum will and truly to be made, we bind ourselves, successors, and assigns, jointly and severally, firmly by these present.

THE CONDITION OF THIS OBLIGATION is such that whereas, the Principal entered into a certain contract with the Owner, dated the ____ day of _____ 20_____, a copy of which is hereto attached and made a part hereof for the construction of:

Elm Avenue and Sea Street Water Main Replacements

NOW, THEREFORE, if the Principal shall well, truly and faithfully perform its duties, all the undertakings, covenants, terms, conditions and agreements of said contract during the original term thereof, and any extensions thereof which may be granted by the City, with or without notice to the Surety and during the one year guarantee period, and if he shall satisfy all claims and demands incurred under such contract, and shall fully indemnify and save harmless the City from all costs and damages which it may suffer by reason of failure to do so, and shall reimburse and repay the City all outlay and expense which the City may incur in making good any default, then this obligation shall be void, otherwise to remain in full force and effect.

PROVIDED FURTHER, that said surety for value received hereby stipulates and agrees that no change, extension of time, alteration or addition to the terms of the Contract or to the WORK to be performed thereunder or the SPECIFICATIONS accompanying the same shall in any way affect its obligation on this BOND, and it does hereby waive notice of any such change, extension of time, alteration or addition to the terms of the Contract or to the WORK or to the SPECIFICATIONS.

PROVIDED FURTHER that no final settlement between the OWNER and the CONTRACTOR shall abridge the right of any beneficiary hereunder, whose claim may be unsatisfied.

IN WITNESS WHEREOF, this instrument is executed in seven (7) counterparts, one of which shall be deemed an original, this the ___ day of _____ 20___.

ATTEST

_____ Principal's Secretary

[SEAL]

_____ Principal

BY:_____

(Address)

_____ (Witness as to Principal)

(Address)

_____

(Surety)

ATTEST:

_____ (Surety Secretary)

[SEAL]

_____ (Witness to Surety)

BY:_____ (Attorney-In-Fact)

_____ (Address)

(Address)

_____

NOTE: Date of Bond must not be prior to date of Contract. If Contractor is Partnership, all partners should execute bond.

IMPORTANT: Surety companies executing bonds must appear on the Treasury Department's most current list (Circular 570 as amended) and be authorized to transact business in the State of projects' location.

O:\Quincy MA\FY 2016 Water Main Project\Design\Specifications\00540.doc

PAYMENT BOND

KNOW ALL MEN BY THESE PRESENT: that

_____
(Name of Contractor)

_____
(Address of Contractor)

a _____, hereinafter called Principal, and
(corporation, partnership, individual)

_____
(Name of Surety)

_____
(Address of Surety)

hereinafter called Surety, are held and firmly bound unto _____

The Department of Public Works for the City of Quincy, Massachusetts
(Name of Owner)

1305 Hancock Street Quincy, MA 02169
(Address of Owner)

hereinafter called OWNER, in the penal sum of: $ _____

_____
(Dollars)

in lawful money of the United States, for the payment of which sum will and truly to be made, we bind ourselves, successors, and assigns, jointly and severally, firmly by these present.

THE CONDITION OF THIS OBLIGATION is such that whereas, the Principal entered into a certain contract with the Owner, dated the ____ day of _____ 20_____, a copy of which is hereto attached and made a part hereof for the construction of:

Elm Avenue and Sea Street Water Main Replacements

NOW, THEREFORE, if the Principal shall promptly make payment to all persons, firms, subcontractors, and corporations furnishing materials for or performing authorized extension or modification thereof, including all amounts due for materials, lubricants, oil, gasoline, coal and coke, repairs on machinery, equipment and tools, consumed or used in connection with the construction of such WORK, and all insurance premiums on said WORK, and for all labor, performed in such WORK whether by SUBCONTRACTOR or otherwise, then this obligation shall be void, otherwise to remain in full force and effect.

PROVIDED FURTHER, that said surety for value received hereby stipulates and agrees that no change, extension of time, alteration or addition to the terms of the Contract or to the WORK to be performed thereunder or the SPECIFICATIONS accompanying the same shall in any way affect its obligation on this BOND, and it does hereby waive notice of any such change, extension of time, alteration or addition to the terms of the Contract or to the WORK or to the SPECIFICATIONS.

PROVIDED FURTHER that no final settlement between the OWNER and the CONTRACTOR shall abridge the right of any beneficiary hereunder, whose claim may be unsatisfied.

IN WITNESS WHEREOF, this instrument is executed in seven (7) counterparts, one of which shall be deemed an original, this the _____ day of _____ 20_____.

ATTEST

_____ _____

Principal's Secretary Principal

[SEAL] BY_____

_____

(Address)

_____ _____

(Witness as to Principal)

_____

(Address)

_____ _____

(Surety)

ATTEST:

_____

(Surety Secretary)

[SEAL]

_____ BY:_____

(Witness to Surety) (Attorney-In-Fact)

_____ _____

(Address) (Address)

_____ _____

NOTE: Date of Bond must not be prior to date of Contract. If Contractor is Partnership, all partners should execute bond.

IMPORTANT: Surety companies executing bonds must appear on the Treasury Department's most current list (Circular 570 as amended) and be authorized to transact business in the State of projects' location.

O:\Quincy MA\FY 2016 Water Main Project\Design\Specifications\00542.doc

Note: This form may be substituted with Standard Forms issued by Insurance Agent.

CERTIFICATE OF INSURANCE

This is to certify that the _____ (Company) has issued the policies listed below, that these policies are written in accordance with the Company's standard policies and endorsements, except as indicated below or as noted in the attachments herewith, which policies and endorsements will be made available to ENGINEER and OWNER UPON request, that they provide coverage and limits of liability shown with respect to the insurance indicated that they are in force on this date, that all deductible amounts are indicated below, and that this Certificate is furnish in accordance with and for the purpose of satisfying the requirements of OWNER and ENGINEER in connection with the award and performance of a contract or agreement between _____ (OWNER), and

1. Name of Insured_____
2. Address of Insured _____3.
Location and Description of Work _____
_____Project Contract No.

	Policy Date	Effective Date	Expiration Date	Coverage and Limits of Liability (at least as shown below) Bodily Injury Liability Each Occurrence	Each Aggregate	Property Damage Liability Number Occurrence	Aggregate
A. Owner's Protective Liability has been issued at the expense of Above Insured to_____Owner.	_____	_____	_____	$1,000,000.	$1,000,000.	$1,000,000.	$1,000,000.
B. Comprehensive General Liability	_____	_____	_____	$1,000,000.	$1,000,000.	$1,000,000.	$1,000,000.

Including: 1. Operations Premises 2. Contractor's Protective 3. Contractual as Below 4. Products/Completed Operations 5. Personal Injury

Property Damage Insurance under policies A & B above includes Coverage for Explosion, Collapse and Underground Property Damage.

				Each Person	Each Accident	Each Accident
C. Auto Liability Including 1. Owner 2. Hired 3. Non-owned	_____	_____	_____	$1,000,000.	$1,000,000.	$1,000,000.
D. Workmen's Compensation	_____	_____	_____	Compensation Statutory State's Coverage B Limits $1,000,000. if applicable		
E. Builder's Risk Insurance - All Risk Completed Value form	_____	_____	_____	As called for in Contract or Agreement		

CONTRACTUAL LIABILITY

CONTRACTOR shall at all times indemnify and save harmless OWNER, ENGINEER and their respective officers, agents and employees on account of any and all claims, damages, losses, litigation, expenses, counsel fees and compensation arising out of injuries (including death) sustained by or alleged to have been sustained by the officers, agents and employees of said OWNER or ENGINEER or of CONTRACTOR, his subcontractors, or material men, and from injuries (including death sustained by or alleged to have been sustained by the public, any or all persons on or near the Work, or by any other person or property, real or personal (including property of said OWNER or ENGINEER caused in whole or in part by the acts, omissions, or neglect of CONTRACTOR including but not limited to any neglect in safeguarding the work or through the use of unacceptable materials in contracting the Work by CONTRACTOR, any subcontractor, material man, or anyone directly or indirectly employed by them or any of them while engaged in the performance of the contract, including the entire elapsed time from the date ordered to start work or the actual start, whichever occurs first, until completion of the one year correction period, as certified by OWNER or ENGINEER.

Policies A, B, C & D shall remain in effect during the one year correction period.

Such insurancer as is herein certified applies to all operations of the insured in connection with, and necessary and incidental to, the work herein described at the locations stated.

It is hereby understood and agreed that the above policies will not be restricted, suspended, materially changed, nor canceled without 15 days advance notice by registered mail to OWNER and ENGINEER._____

_____ _____

Authorized Representative Signature Address

CITY OF QUINCY
Purchasing Department
1305 Hancock Street, Quincy, MA 02169

Phone: 376-1060
Fax: 376-1074

TAX COMPLIANCE CERTIFICATE

MASS. GENERAL LAWS, CH. 62C, S: 49A(b)

I hereby certify that I have complied with all laws of the Commonwealth of Massachusetts relating to taxes, reporting of employees and contractors, and withholding of child support.

Signed under the pains and penalties of perjury.

(1) Individual Contractor _____
(Contractor's Name and Signature)

Social Security Number _____

(2) Corporation, Association or Partnership _____
(Contractor's Name)

Federal Tax ID Number, or Social Security Number _____

By: _____
(Authorized Signature)

Note to Contractor: Please sign at (1) or (2), whichever applies.

CHAPTER 62C. ADMINISTRATIVE PROVISIONS RELATIVE TO STATE TAXATION

Chapter 62C: Section 49A Certification of compliance with tax laws as prerequisite to obtaining license or governmental contract

Section 49A. (a) Any person applying to any department, board, commission, division, authority, district or other agency of the commonwealth or any subdivision of the commonwealth, including a city, town or district, for a right or license to conduct a profession, trade or business, or for the renewal of such right or license, shall certify upon such application, under penalties of perjury, that he has complied with all laws of the commonwealth relating to taxes, reporting of employees and contractors, and withholding and remitting child support. Such right or license shall not be issued or renewed unless such certification is made.

(b) No contract or other agreement for the purposes of providing goods, services or real estate space to any of the foregoing agencies shall be entered into, renewed or extended with any person unless such person certifies in writing, under penalties of perjury, that he had complied with all laws of the commonwealth relating to taxes, reporting of employees and contractors, and withholding and remitting child support.

(c) Any such agency, which has been notified by the commissioner pursuant to section forty-seven A that a person who holds a license or certificate of authority issued by such agency or who has agreed to furnish goods, services or real estate space to such agency has neglected or refused to file any returns or to pay any tax required under this chapter and that such person has not filed in good faith a pending application for abatement of such tax or a pending petition before the appellate tax board contesting such tax or has been penalized pursuant to section 9 of chapter 62E for failure to comply with the provisions under said chapter 62E relating to reporting of employees and contractors, or has been penalized pursuant to paragraph (3) of subsection (f) of section 12 of chapter 119A for failure to comply with the provisions under said chapter 119A relating to withholding and remitting child support, shall refuse to reissue, renew or extend such license, certificate of authority, contract or agreement until the agency receives a certificate issued by the commissioner that the person is in good standing with respect to any and all returns due and taxes payable to the commissioner as of the date of issuance of said certificate, including all returns and taxes referenced in the initial notification or, if the licensee has been penalized for failure to comply with the provisions relating to reporting of employees and contractors under chapter 62E or withholding and remitting child support under chapter 119A, a certificate issued by the commissioner that the licensee is in compliance with said provisions.

(d) Any person who owns or leases a motor vehicle or trailer that is required to be registered in the commonwealth under chapter 90 and improperly registers the motor vehicle or trailer in another state or misrepresents the place of garaging of the motor vehicle or trailer in another city or town, shall be considered in violation of laws of the commonwealth relating to taxes under chapter 60A, chapter 64H or chapter 64I. The right, license or contract provided for in subsections (a) and (b) shall not be issued or renewed until the person or business entity has paid all taxes due at the time of application for such right, license or contract.

(e) Any person who, for the purpose of evading payment of a tax pursuant to chapters 59 to 64J, inclusive, willfully makes and subscribes any return, form, statement or other document pursuant to subsection (a), (b) or (d) that contains or is verified by a written declaration that is made under the penalties of perjury, and that contains information that he does not believe to be true and correct as to every matter material to his compliance with all laws of the commonwealth relating to taxes, shall be subject to section 73.

NOTICE TO PROCEED

TO:._____ DATE:_____

_____ Project:_____

_____

You are hereby notified to commence WORK on or before _____

In accordance with contract documents the contract time is 180 calendar days, exclusive of winter shut down. The date for completion of all work is therefore _____.

BY:_____

Name: Daniel G. Raymondi

Title: Commissioner of Public Works

ACCEPTANCE OF NOTICE

Receipt of the above NOTICE TO PROCEED is hereby acknowledged by:

_____
(Company Name)

Signature:_____ Date:_____

Print Name:_____ Title:_____

O:\Quincy MA\FY 2016 Water Main Project\Design\Specifications\00600.doc

CERTIFICATION OF GENERAL BIDDERS ON PUBLIC CONSTRUCTION PROJECTS

I. CERTIFICATION REGARDING HEALTH AND SAFETY

The undersigned hereby certifies that he is able to furnish labor that can work in harmony with all other elements of labor employed or to be employed on the work; that all employees to be employed at the worksite will have successfully completed a course in construction safety and health approved by the United States Occupational Safety and Health Administration that is at least ten hours in duration at the time the employee begins work and who shall furnish documentation of successful completion of said course with the first certified payroll report for each employee; and that he will comply fully with all laws and regulations application to awards made subject to section 44A.

II. CERTIFICATION REGARDING NON-COLLUSION AND DEBARMENT

The undersigned further certifies under the penalties of perjury that this bid is in all respects bona fide, fair and made without collusion or fraud with any other person. As used in this subsection the word "person" shall mean any natural person, joint venture, partnership, corporation or other business or legal entity. The undersigned further certifies under penalty of perjury that the said undersigned is not presently debarred from doing public construction work in the Commonwealth under the provisions of section twenty-nine F of chapter twenty-nine, or any other applicable debarment provisions of any other chapter of the General Laws or any rule or regulation promulgated thereunder.

Date: _____

_____
Name of General Bidder

By _____
Signature

_____
Print name and title

_____
Business Address

_____
Street Address City and State

CERTIFICATION OF SUB- BIDDERS (IF ANY) ON PUBLIC CONSTRUCTION PROJECTS

I. CERTIFICATION REGARDING HEALTH AND SAFETY

The undersigned hereby certifies that he is able to furnish labor that can work in harmony with all other elements of labor employed or to be employed on the work; that all employees to be employed at the worksite will have successfully completed a course in construction safety and health approved by the United States Occupation Safety and Health Administration that is at least ten hours in duration at the time the employee begins work and who shall furnish documentation of successful completion of said course with the first certified payroll report for each employee; and that he will comply fully with all laws and regulations applicable to awards of subcontracts subject to section 44F.

II. CERTIFICATION REGARDING NON-COLLUSION AND DEBARMENT

The undersigned further certifies under penalties of perjury that this subbid is in all responses bona fide, fair and made without collusion or fraud with any other person. As used in this subsection the "person" shall mean any natural person, joint venture, partnership, corporation or other business or legal entity. The undersigned further certifies under penalty of perjury that the said undersigned is not presently debarred from doing public construction work in the Commonwealth under the provisions of section twenty-nine F of chapter twenty-nine, or any other applicable debarment provisions of any other chapter of the General Laws or any rule or regulation promulgated thereunder.

Date _____

_____
Name of Sub-bidder

By _____
Signature

_____
Print Name and Title

_____
Business Name

_____
Street Address, City and State

O:\Quincy MA\FY 2016 Water Main Project\Design\Specifications\00605_OSHA-101.doc

This document has important legal consequences; consultation with an attorney is encouraged with respect to its use or modification. This document should be adapted to the particular circumstances of the contemplated Project and the Controlling Law.

STANDARD
GENERAL CONDITIONS
OF THE
CONSTRUCTION CONTRACT

Prepared by

ENGINEERS JOINT CONTRACT DOCUMENTS COMMITTEE

and

Issued and Published Jointly By

PROFESSIONAL ENGINEERS IN PRIVATE PRACTICE
a practice division of the
NATIONAL SOCIETY OF PROFESSIONAL ENGINEERS

AMERICAN CONSULTING ENGINEERS COUNCIL

AMERICAN SOCIETY OF CIVIL ENGINEERS

This document has been approved and endorsed by

The Associated General Contractors of America

Construction Specifications Institute

These General Conditions have been prepared for use with the Owner-Contractor Agreements (No. 1910-8-A-1 or 1910-8-A-2) (1996 Editions). Their provisions are interrelated and a change in one may necessitate a change in the other. Comments concerning their usage are contained in the EJCDC User's Guide (No. 1910-50). For guidance in the preparation of Supplementary Conditions, see Guide to the Preparation of Supplementary Conditions (No. 1910-17) (1996 Edition).

EJCDC No. 1910-8 (1996 Edition)

02/18/05

Copyright ©1996

National Society of Professional Engineers
1420 King Street, Alexandria, VA 22314

American Consulting Engineers Council
1015 15th Street N.W., Washington, DC 20005

American Society of Civil Engineers
345 East 47th Street, New York, NY 10017

TABLE OF CONTENTS

Page

ARTICLE 1 - DEFINITIONS AND TERMINOLOGY 6
1.01 Defined Terms 6
1.02 Terminology 8
ARTICLE 2 - PRELIMINARY MATTERS 9
2.01 Delivery of Bonds 9
2.02 Copies of Documents 9
2.03 Commencement of Contract Times; Notice to Proceed 9
2.04 Starting the Work 9
2.05 Before Starting Construction 9
2.06 Preconstruction Conference 9
2.07 Initial Acceptance of Schedules 9
ARTICLE 3 - CONTRACT DOCUMENTS: INTENT, AMENDING, REUSE 10
3.01 Intent 10
3.02 Reference Standards 10
3.03 Reporting and Resolving Discrepancies 10
3.04 Amending and Supplementing Contract Documents 11
3.05 Reuse of Documents 11
ARTICLE 4 - AVAILABILITY OF LANDS; SUBSURFACE AND PHYSICAL CONDITIONS; REFERENCE POINTS 11
4.01 Availability of Lands 11
4.02 Subsurface and Physical Conditions 11
4.03 Differing Subsurface or Physical Conditions 11
4.04 Underground Facilities 12
4.05 Reference Points 13
4.06 Hazardous Environmental Condition at Site 13
ARTICLE 5 - BONDS AND INSURANCE 14
5.01 Performance, Payment, and Other Bonds 14
5.02 Licensed Sureties and Insurers 14
5.03 Certificates of Insurance 14
5.04 Contractor's Liability Insurance 15
5.05 Owner's Liability Insurance 15
5.06 Property Insurance 15
5.07 Waiver of Rights 16
5.08 Receipt and Application of Insurance Proceeds 17
5.09 Acceptance of Bonds and Insurance; Option to Replace 17
5.10 Partial Utilization, Acknowledgment of Property Insurer 17
ARTICLE 6 - CONTRACTOR'S RESPONSIBILITIES 17
6.01 Supervision and Superintendence 17
6.02 Labor; Working Hours 18
6.03 Services, Materials, and Equipment 18
6.04 Progress Schedule 18
6.05 Substitutes and "Or-Equals" 18
6.06 Concerning Subcontractors, Suppliers, and Others 19
6.07 Patent Fees and Royalties 20
6.08 Permits 20
6.09 Laws and Regulations 20
6.10 Taxes 21
6.11 Use of Site and Other Areas 21
6.12 Record Documents 21
6.13 Safety and Protection 21
6.14 Safety Representative 22
6.15 Hazard Communication Programs 22

6.16 Emergencies 22
6.17 Shop Drawings and Samples 22
6.18 Continuing the Work 23
6.19 Contractor's General Warranty and Guarantee 23
6.20 Indemnification 24
ARTICLE 7 - OTHER WORK 24
7.01 Related Work at Site 24
7.02 Coordination 25
ARTICLE 8 - OWNER'S RESPONSIBILITIES 25
8.01 Communications to Contractor 25
8.02 Replacement of Engineer 25
8.03 Furnish Data 25
8.04 Pay Promptly When Due 25
8.05 Lands and Easements; Reports and Tests 25
8.06 Insurance 25
8.07 Change Orders 25
8.08 Inspections, Tests, and Approvals 25
8.09 Limitations On OWNER's Responsibilities 25
8.10 Undisclosed Hazardous Environmental Condition 25
8.11 Evidence of Financial Arrangements 25
ARTICLE 9 - ENGINEER'S STATUS DURING CONSTRUCTION 26
9.01 Owner's Representative 26
9.02 Visits to Site 26
9.03 Project Representative 26
9.04 Clarifications and Interpretations 26
9.05 Authorized Variations in Work 26
9.06 Rejecting Defective Work 26
9.07 Shop Drawings, Change Orders and Payments 26
9.08 Determinations for Unit Price Work 26
9.09 Decisions on Requirements of Contract Documents and Acceptability of Work 27
9.10 Limitations on Engineer's Authority and Responsibilities 27
ARTICLE 10 - CHANGES IN THE WORK; CLAIMS 27
10.01 Authorized Changes in the Work 27
10.02 Unauthorized Changes in the Work 27
10.03 Execution of Change Orders 27
10.04 Notification to Surety 28
10.05 Claims and Disputes 28
ARTICLE 11 - COST OF THE WORK; CASH ALLOWANCES; UNIT PRICE WORK 29
11.01 Cost of the Work 29
11.02 Cash Allowances 30
11.03 Unit Price Work 30
ARTICLE 12 - CHANGE OF CONTRACT PRICE; CHANGE OF CONTRACT TIMES 31
12.01 Change of Contract Price 31
12.02 Change of Contract Times 32
12.03 Delays Beyond Contractor's Control 32
12.04 Delays Within Contractor's Control 32
12.05 Delays Beyond Owner's And Contractor's Control 32
12.06 Delay Damages 32
ARTICLE 13 - TESTS AND INSPECTIONS; CORRECTION, REMOVAL OR ACCEPTANCE OF DEFECTIVE WORK 32
13.01 Notice of Defects 32
13.02 Access to Work 32
13.03 Tests and Inspections 32
13.04 Uncovering Work 33

13.05 Owner May Stop the Work....33
13.06 Correction or Removal of Defective Work....33
13.07 Correction Period....33
13.08 Acceptance of Defective Work....34
13.09 Owner May Correct Defective Work....34
ARTICLE 14 - PAYMENTS TO CONTRACTOR AND COMPLETION....34
14.01 Schedule of Values....34
14.02 Progress Payments....34
14.03 Contractor's Warranty of Title....36
14.04 Substantial Completion....36
14.05 Partial Utilization....37
14.06 Final Inspection....37
14.07 Final Payment....37
14.08 Final Completion Delayed....38
14.09 Waiver of Claims....38
ARTICLE 15 - SUSPENSION OF WORK AND TERMINATION....38
15.01 Owner May Suspend Work....38
15.02 Owner May Terminate For Cause....38
15.03 Owner May Terminate For Convenience....39
15.04 Contractor May Stop Work or Terminate....39
ARTICLE 16 - DISPUTE RESOLUTION....39
16.01 Methods and Procedures....39
ARTICLE 17 - MISCELLANEOUS....39
17.01 Giving Notice....39
17.02 Computation of Times....39
17.03 Cumulative Remedies....39
17.04 Survival of Obligations....39
17.05 Controlling Law....40

GENERAL CONDITIONS

ARTICLE 1 - DEFINITIONS AND TERMINOLOGY

1.01 Defined Terms

A. Wherever used in the Contract Documents and printed with initial or all capital letters, the terms listed below will have the meanings indicated which are applicable to both the singular and plural thereof.

1. *Addenda*--Written or graphic instruments issued prior to the opening of Bids which clarify, correct, or change the Bidding Requirements or the Contract Documents.

2. *Agreement*--The written instrument which is evidence of the agreement between OWNER and CONTRACTOR covering the Work.

3. *Application for Payment*--The form acceptable to ENGINEER which is to be used by CONTRACTOR during the course of the Work in requesting progress or final payments and which is to be accompanied by such supporting documentation as is required by the Contract Documents.

4. *Asbestos*--Any material that contains more than one percent asbestos and is friable or is releasing asbestos fibers into the air above current action levels established by the United States Occupational Safety and Health Administration.

5. *Bid*--The offer or proposal of a bidder submitted on the prescribed form setting forth the prices for the Work to be performed.

6. *Bidding Documents*--The Bidding Requirements and the proposed Contract Documents (including all Addenda issued prior to receipt of Bids).

7. *Bidding Requirements*--The Advertisement or Invitation to Bid, Instructions to Bidders, Bid security form, if any, and the Bid form with any supplements.

8. *Bonds*--Performance and payment bonds and other instruments of security.

9. *Change Order*--A document recommended by ENGINEER which is signed by CONTRACTOR and OWNER and authorizes an addition, deletion, or revision in the Work or an adjustment in the Contract Price or the Contract Times, issued on or after the Effective Date of the Agreement.

10. *Claim*--A demand or assertion by OWNER or CONTRACTOR seeking an adjustment of Contract Price or Contract Times, or both, or other relief with respect to the terms of the Contract. A demand for money or services by a third party is not a Claim.

11. *Contract*--The entire and integrated written agreement between the OWNER and CONTRACTOR concerning the Work. The Contract supersedes prior negotiations, representations, or agreements, whether written or oral.

* 12. *Contract Documents*--The Contract Documents establish the rights and obligations of the parties and include the Agreement, Addenda (which pertain to the Contract Documents), CONTRACTOR's Bid (including documentation accompanying the Bid and any post Bid documentation submitted prior to the Notice of Award) when attached as an exhibit to the Agreement, the Notice to Proceed, the Bonds, these General Conditions, the Supplementary Conditions, the Specifications and the Drawings as the same are more specifically identified in the Agreement, together with all Written Amendments, Change Orders, Work Change Directives, Field Orders, and ENGINEER's written interpretations and clarifications issued on or after the Effective Date of the Agreement. Approved Shop Drawings and the reports and drawings of subsurface and physical conditions are not Contract Documents. Only printed or hard copies of the items listed in this paragraph are Contract Documents. Files in electronic media format of text, data, graphics, and the like that may be furnished by OWNER to CONTRACTOR are not Contract Documents.

13. *Contract Price*--The moneys payable by OWNER to CONTRACTOR for completion of the Work in accordance with the Contract Documents as stated in the Agreement (subject to the provisions of paragraph 11.03 in the case of Unit Price Work).

14. *Contract Times*--The number of days or the dates stated in the Agreement to: (i) achieve Substantial Completion; and (ii) complete the Work so that it is ready for final payment as evidenced by ENGINEER's written recommendation of final payment.

15. *CONTRACTOR*--The individual or entity with whom OWNER has entered into the Agreement.

16. *Cost of the Work*--See paragraph 11.01.A for definition.

17. *Drawings*--That part of the Contract Documents prepared or approved by ENGINEER which graphically shows the scope, extent, and character of the Work to be performed by CONTRACTOR. Shop Drawings and other CONTRACTOR submittals are not Drawings as so defined.

18. *Effective Date of the Agreement*--The date indicated in the Agreement on which it becomes effective, but if no such date is indicated, it means the date on which

the Agreement is signed and delivered by the last of the two parties to sign and deliver.

* 19. *ENGINEER*--The individual or entity named as such in the Agreement.

* 20. *ENGINEER's Consultant*--An individual or entity having a contract with ENGINEER to furnish services as ENGINEER's independent professional associate or consultant with respect to the Project and who is identified as such in the Supplementary Conditions.

21. *Field Order*--A written order issued by ENGINEER which requires minor changes in the Work but which does not involve a change in the Contract Price or the Contract Times.

22. *General Requirements*--Sections of Division 1 of the Specifications. The General Requirements pertain to all sections of the Specifications.

23. *Hazardous Environmental Condition*--The presence at the Site of Asbestos, PCBs, Petroleum, Hazardous Waste, or Radioactive Material in such quantities or circumstances that may present a substantial danger to persons or property exposed thereto in connection with the Work.

24. *Hazardous Waste*--The term Hazardous Waste shall have the meaning provided in Section 1004 of the Solid Waste Disposal Act (42 USC Section 6903) as amended from time to time.

25. *Laws and Regulations; Laws or Regulations*--Any and all applicable laws, rules, regulations, ordinances, codes, and orders of any and all governmental bodies, agencies, authorities, and courts having jurisdiction.

26. *Liens*--Charges, security interests, or encumbrances upon Project funds, real property, or personal property.

27. *Milestone*--A principal event specified in the Contract Documents relating to an intermediate completion date or time prior to Substantial Completion of all the Work.

28. *Notice of Award*--The written notice by OWNER to the apparent successful bidder stating that upon timely compliance by the apparent successful bidder with the conditions precedent listed therein, OWNER will sign and deliver the Agreement.

29. *Notice to Proceed*--A written notice given by OWNER to CONTRACTOR fixing the date on which the Contract Times will commence to run and on which CONTRACTOR shall start to perform the Work under the Contract Documents.

** 30. *OWNER*--The individual, entity, public body, or authority with whom CONTRACTOR has entered into the Agreement and for whom the Work is to be performed.

31. *Partial Utilization*--Use by OWNER of a substantially completed part of the Work for the purpose for which it is intended (or a related purpose) prior to Substantial Completion of all the Work.

32. *PCBs*--Polychlorinated biphenyls.

33. *Petroleum*--Petroleum, including crude oil or any fraction thereof which is liquid at standard conditions of temperature and pressure (60 degrees Fahrenheit and 14.7 pounds per square inch absolute), such as oil, petroleum, fuel oil, oil sludge, oil refuse, gasoline, kerosene, and oil mixed with other non-Hazardous Waste and crude oils.

34. *Project*--The total construction of which the Work to be performed under the Contract Documents may be the whole, or a part as may be indicated elsewhere in the Contract Documents.

35. *Project Manual*--The bound documentary information prepared for bidding and constructing the Work. A listing of the contents of the Project Manual, which may be bound in one or more volumes, is contained in the table(s) of contents.

36. *Radioactive Material*--Source, special nuclear, or byproduct material as defined by the Atomic Energy Act of 1954 (42 USC Section 2011 et seq.) as amended from time to time.

37. *Resident Project Representative*--The authorized representative of ENGINEER who may be assigned to the Site or any part thereof.

38. *Samples*--Physical examples of materials, equipment, or workmanship that are representative of some portion of the Work and which establish the standards by which such portion of the Work will be judged.

39. *Shop Drawings*--All drawings, diagrams, illustrations, schedules, and other data or information which are specifically prepared or assembled by or for CONTRACTOR and submitted by CONTRACTOR to illustrate some portion of the Work.

40. *Site*--Lands or areas indicated in the Contract Documents as being furnished by OWNER upon which the Work is to be performed, including rights-of-way and easements for access thereto, and such other lands furnished by OWNER which are designated for the use of CONTRACTOR.

* 41. *Specifications*--~~That part of the Contract Documents consisting of written technical descriptions of materials, equipment, systems, standards, and workmanship as applied to the Work and certain administrative details applicable thereto.~~

42. *Subcontractor*--An individual or entity having a direct contract with CONTRACTOR or with any other Subcontractor for the performance of a part of the Work at the Site.

** 43. *Substantial Completion*--The time at which the Work (or a specified part thereof) has progressed to the point where, in the opinion of ENGINEER, the Work (or a specified part thereof) is sufficiently complete, in accordance with the Contract Documents, so that the Work (or a specified part thereof) can be utilized for the purposes for which it is intended. The terms "substantially complete" and "substantially completed" as applied to all or part of the Work refer to Substantial Completion thereof.

44. *Supplementary Conditions*--That part of the Contract Documents which amends or supplements these General Conditions.

45. *Supplier*--A manufacturer, fabricator, supplier, distributor, materialman, or vendor having a direct contract with CONTRACTOR or with any Subcontractor to furnish materials or equipment to be incorporated in the Work by CONTRACTOR or any Subcontractor.

46. *Underground Facilities*--All underground pipelines, conduits, ducts, cables, wires, manholes, vaults, tanks, tunnels, or other such facilities or attachments, and any encasements containing such facilities, including those that convey electricity, gases, steam, liquid petroleum products, telephone or other communications, cable television, water, wastewater, storm water, other liquids or chemicals, or traffic or other control systems.

47. *Unit Price Work*--Work to be paid for on the basis of unit prices.

48. *Work*--The entire completed construction or the various separately identifiable parts thereof required to be provided under the Contract Documents. Work includes and is the result of performing or providing all labor, services, and documentation necessary to produce such construction, and furnishing, installing, and incorporating all materials and equipment into such construction, all as required by the Contract Documents.

49. *Work Change Directive*--A written statement to CONTRACTOR issued on or after the Effective Date of the Agreement and signed by OWNER and recommended by ENGINEER ordering an addition, deletion, or revision in the Work, or responding to differing or unforeseen subsurface or physical conditions under which the Work is to be performed or to emergencies. A Work Change Directive will not change the Contract Price or the Contract Times but is evidence that the parties expect that the change ordered or documented by a Work Change Directive will be incorporated in a subsequently issued Change Order following negotiations by the parties as to its effect, if any, on the Contract Price or Contract Times.

50. *Written Amendment*--A written statement modifying the Contract Documents, signed by OWNER and CONTRACTOR on or after the Effective Date of the Agreement and normally dealing with the nonengineering or nontechnical rather than strictly construction-related aspects of the Contract Documents.

1.02 Terminology

A. *Intent of Certain Terms or Adjectives*

1. Whenever in the Contract Documents the terms "as allowed," "as approved," or terms of like effect or import are used, or the adjectives "reasonable," "suitable," "acceptable," "proper," "satisfactory," or adjectives of like effect or import are used to describe an action or determination of ENGINEER as to the Work, it is intended that such action or determination will be solely to evaluate, in general, the completed Work for compliance with the requirements of and information in the Contract Documents and conformance with the design concept of the completed Project as a functioning whole as shown or indicated in the Contract Documents (unless there is a specific statement indicating otherwise). The use of any such term or adjective shall not be effective to assign to ENGINEER any duty or authority to supervise or direct the performance of the Work or any duty or authority to undertake responsibility contrary to the provisions of paragraph 9.10 or any other provision of the Contract Documents.

B. *Day*

1. The word "day" shall constitute a calendar day of 24 hours measured from midnight to the next midnight.

C. *Defective*

1. The word "defective," when modifying the word "Work," refers to Work that is unsatisfactory, faulty, or deficient in that it does not conform to the Contract Documents or does not meet the requirements of any inspection, reference standard, test, or approval referred to in the Contract Documents, or has been damaged prior to ENGINEER's recommendation of final payment (unless responsibility for the protection thereof has been assumed by OWNER at Substantial Completion in accordance with paragraph 14.04 or 14.05).

D. *Furnish, Install, Perform, Provide*

1. The word "furnish," when used in connection with services, materials, or equipment, shall mean to supply and deliver said services, materials, or equipment to the Site (or some other specified location) ready for use or installation and in usable or operable condition.

2. The word "install," when used in connection with services, materials, or equipment, shall mean to put into use or place in final position said services, materials, or equipment complete and ready for intended use.

3. The words "perform" or "provide," when used in connection with services, materials, or

equipment, shall mean to furnish and install said services, materials, or equipment complete and ready for intended use.

4. When "furnish," "install," "perform," or "provide" is not used in connection with services, materials, or equipment in a context clearly requiring an obligation of CONTRACTOR, "provide" is implied.

E. Unless stated otherwise in the Contract Documents, words or phrases which have a well-known technical or construction industry or trade meaning are used in the Contract Documents in accordance with such recognized meaning.

ARTICLE 2 - PRELIMINARY MATTERS

2.01 Delivery of Bonds

A. When CONTRACTOR delivers the executed Agreements to OWNER, CONTRACTOR shall also deliver to OWNER such Bonds as CONTRACTOR may be required to furnish.

2.02 Copies of Documents

A. OWNER shall furnish to CONTRACTOR up to ten copies of the Contract Documents. Additional copies will be furnished upon request at the cost of reproduction.

2.03 Commencement of Contract Times; Notice to Proceed *

A. The Contract Times will commence to run on the thirtieth day after the Effective Date of the Agreement or, if a Notice to Proceed is given, on the day indicated in the Notice to Proceed. A Notice to Proceed may be given at any time within 30 days after the Effective Date of the Agreement. In no event will the Contract Times commence to run later than the sixtieth day after the day of Bid opening or the thirtieth day after the Effective Date of the Agreement, whichever date is earlier.

2.04 Starting the Work

A. CONTRACTOR shall start to perform the Work on the date when the Contract Times commence to run. No Work shall be done at the Site prior to the date on which the Contract Times commence to run.

2.05 Before Starting Construction

A. *CONTRACTOR's Review of Contract Documents:* Before undertaking each part of the Work, CONTRACTOR shall carefully study and compare the Contract Documents and check and verify pertinent figures therein and all applicable field measurements. CONTRACTOR shall promptly report in writing to ENGINEER any conflict, error, ambiguity, or discrepancy which CONTRACTOR may discover and shall obtain a written interpretation or clarification from ENGINEER before proceeding with any Work affected thereby; however, CONTRACTOR shall not be liable to OWNER or ENGINEER for failure to report any conflict, error, ambiguity, or discrepancy in the Contract Documents unless CONTRACTOR knew or reasonably should have known thereof.

B. *Preliminary Schedules:* Within ten days after the Effective Date of the Agreement (unless otherwise specified in the General Requirements), CONTRACTOR shall submit to ENGINEER for its timely review:

1. a preliminary progress schedule indicating the times (numbers of days or dates) for starting and completing the various stages of the Work, including any Milestones specified in the Contract Documents;

2. a preliminary schedule of Shop Drawing and Sample submittals which will list each required submittal and the times for submitting, reviewing, and processing such submittal; and

3. a preliminary schedule of values for all of the Work which includes quantities and prices of items which when added together equal the Contract Price and subdivides the Work into component parts in sufficient detail to serve as the basis for progress payments during performance of the Work. Such prices will include an appropriate amount of overhead and profit applicable to each item of Work.

***** C. *Evidence of Insurance*~~: Before any Work at the Site is started, CONTRACTOR and OWNER shall each deliver to the other, with copies to each additional insured identified in the Supplementary Conditions, certificates of insurance (and other evidence of insurance which either of them or any additional insured may reasonably request) which CONTRACTOR and OWNER respectively are required to purchase and maintain in accordance with Article 5.~~

2.06 Preconstruction Conference

A. Within 20 days after the Contract Times start to run, but before any Work at the Site is started, a conference attended by CONTRACTOR, ENGINEER, and others as appropriate will be held to establish a working understanding among the parties as to the Work and to discuss the schedules referred to in paragraph 2.05.B, procedures for handling Shop Drawings and other submittals, processing Applications for Payment, and maintaining required records.

2.07 Initial Acceptance of Schedules

A. Unless otherwise provided in the Contract Documents, at least ten days before submission of the first Application for Payment a conference attended by CONTRACTOR, ENGINEER, and others as appropriate will be held to review for acceptability to ENGINEER as provided below the schedules submitted in accordance with paragraph 2.05.B. CONTRACTOR shall have an additional

ten days to make corrections and adjustments and to complete and resubmit the schedules. No progress payment shall be made to CONTRACTOR until acceptable schedules are submitted to ENGINEER.

1. The progress schedule will be acceptable to ENGINEER if it provides an orderly progression of the Work to completion within any specified Milestones and the Contract Times. Such acceptance will not impose on ENGINEER responsibility for the progress schedule, for sequencing, scheduling, or progress of the Work nor interfere with or relieve CONTRACTOR from CONTRACTOR's full responsibility therefor.

2. CONTRACTOR's schedule of Shop Drawing and Sample submittals will be acceptable to ENGINEER if it provides a workable arrangement for reviewing and processing the required submittals.

3. CONTRACTOR's schedule of values will be acceptable to ENGINEER as to form and substance if it provides a reasonable allocation of the Contract Price to component parts of the Work.

ARTICLE 3 - CONTRACT DOCUMENTS: INTENT, AMENDING, REUSE

3.01 Intent

* A. The Contract Documents are complementary; what is called for by one is as binding as if called for by all.

B. It is the intent of the Contract Documents to describe a functionally complete Project (or part thereof) to be constructed in accordance with the Contract Documents. Any labor, documentation, services, materials, or equipment that may reasonably be inferred from the Contract Documents or from prevailing custom or trade usage as being required to produce the intended result will be provided whether or not specifically called for at no additional cost to OWNER.

C. Clarifications and interpretations of the Contract Documents shall be issued by ENGINEER as provided in Article 9.

3.02 Reference Standards

A. *Standards, Specifications, Codes, Laws, and Regulations*

1. Reference to standards, specifications, manuals, or codes of any technical society, organization, or association, or to Laws or Regulations, whether such reference be specific or by implication, shall mean the standard, specification, manual, code, or Laws or Regulations in effect at the time of opening of Bids (or on the Effective Date of the Agreement if there were no Bids), except as may be otherwise specifically stated in the Contract Documents.

2. No provision of any such standard, specification, manual or code, or any instruction of a Supplier shall be effective to change the duties or responsibilities of OWNER, CONTRACTOR, or ENGINEER, or any of their subcontractors, consultants, agents, or employees from those set forth in the Contract Documents, nor shall any such provision or instruction be effective to assign to OWNER, ENGINEER, or any of ENGINEER's Consultants, agents, or employees any duty or authority to supervise or direct the performance of the Work or any duty or authority to undertake responsibility inconsistent with the provisions of the Contract Documents.

3.03 Reporting and Resolving Discrepancies

A. *Reporting Discrepancies*

1. If, during the performance of the Work, CONTRACTOR discovers any conflict, error, ambiguity, or discrepancy within the Contract Documents or between the Contract Documents and any provision of any Law or Regulation applicable to the performance of the Work or of any standard, specification, manual or code, or of any instruction of any Supplier, CONTRACTOR shall report it to ENGINEER in writing at once. CONTRACTOR shall not proceed with the Work affected thereby (except in an emergency as required by paragraph 6.16.A) until an amendment or supplement to the Contract Documents has been issued by one of the methods indicated in paragraph 3.04; provided, however, that CONTRACTOR shall not be liable to OWNER or ENGINEER for failure to report any such conflict, error, ambiguity, or discrepancy unless CONTRACTOR knew or reasonably should have known thereof.

B. *Resolving Discrepancies*

1. Except as may be otherwise specifically stated in the Contract Documents, the provisions of the Contract Documents shall take precedence in resolving any conflict, error, ambiguity, or discrepancy between the provisions of the Contract Documents and:

a. the provisions of any standard, specification, manual, code, or instruction (whether or not specifically incorporated by reference in the Contract Documents); or

b. the provisions of any Laws or Regulations applicable to the performance of the Work (unless such an interpretation of the provisions of the Contract Documents would result in violation of such Law or Regulation).

3.04 Amending and Supplementing Contract Documents

A. The Contract Documents may be amended to provide for additions, deletions, and revisions in the Work or to modify the terms and conditions thereof in one or more of the following ways: (i) a Written Amendment; (ii) a Change Order; or (iii) a Work Change Directive.

B. The requirements of the Contract Documents may be supplemented, and minor variations and deviations in the Work may be authorized, by one or more of the following ways: (i) a Field Order; (ii) ENGINEER's approval of a Shop Drawing or Sample; or (iii) ENGINEER's written interpretation or clarification.

3.05 Reuse of Documents

A. CONTRACTOR and any Subcontractor or Supplier or other individual or entity performing or furnishing any of the Work under a direct or indirect contract with OWNER: (i) shall not have or acquire any title to or ownership rights in any of the Drawings, Specifications, or other documents (or copies of any thereof) prepared by or bearing the seal of ENGINEER or ENGINEER's Consultant, including electronic media editions; and (ii) shall not reuse any of such Drawings, Specifications, other documents, or copies thereof on extensions of the Project or any other project without written consent of OWNER and ENGINEER and specific written verification or adaption by ENGINEER. This prohibition will survive final payment, completion, and acceptance of the Work, or termination or completion of the Contract. Nothing herein shall preclude CONTRACTOR from retaining copies of the Contract Documents for record purposes.

ARTICLE 4 - AVAILABILITY OF LANDS; SUBSURFACE AND PHYSICAL CONDITIONS; REFERENCE POINTS

4.01 Availability of Lands

A. OWNER shall furnish the Site. OWNER shall notify CONTRACTOR of any encumbrances or restrictions not of general application but specifically related to use of the Site with which CONTRACTOR must comply in performing the Work. OWNER will obtain in a timely manner and pay for easements for permanent structures or permanent changes in existing facilities. If CONTRACTOR and OWNER are unable to agree on entitlement to or on the amount or extent, if any, of any adjustment in the Contract Price or Contract Times, or both, as a result of any delay in OWNER's furnishing the Site, CONTRACTOR may make a Claim therefor as provided in paragraph 10.05.

B. Upon reasonable written request, OWNER shall furnish CONTRACTOR with a current statement of record legal title and legal description of the lands upon which the Work is to be performed and OWNER's interest therein as necessary for giving notice of or filing a mechanic's or construction lien against such lands in accordance with applicable Laws and Regulations.

C. CONTRACTOR shall provide for all additional lands and access thereto that may be required for temporary construction facilities or storage of materials and equipment.

4.02 Subsurface and Physical Conditions

***** A. *Reports and Drawings:* The Supplementary Conditions identify:

1. those reports of explorations and tests of subsurface conditions at or contiguous to the Site that ENGINEER has used in preparing the Contract Documents; and

2. those drawings of physical conditions in or relating to existing surface or subsurface structures at or contiguous to the Site (except Underground Facilities) that ENGINEER has used in preparing the Contract Documents.

B. *Limited Reliance by CONTRACTOR on Technical Data Authorized:* CONTRACTOR may rely upon the general accuracy of the "technical data" contained in such reports and drawings, but such reports and drawings are not Contract Documents. Such "technical data" is identified in the Supplementary Conditions. Except for such reliance on such "technical data," CONTRACTOR may not rely upon or make any Claim against OWNER, ENGINEER, or any of ENGINEER's Consultants with respect to:

1. the completeness of such reports and drawings for CONTRACTOR's purposes, including, but not limited to, any aspects of the means, methods, techniques, sequences, and procedures of construction to be employed by CONTRACTOR, and safety precautions and programs incident thereto; or

2. other data, interpretations, opinions, and information contained in such reports or shown or indicated in such drawings; or

3. any CONTRACTOR interpretation of or conclusion drawn from any "technical data" or any such other data, interpretations, opinions, or information.

4.03 Differing Subsurface or Physical Conditions

A. *Notice:* If CONTRACTOR believes that any subsurface or physical condition at or contiguous to the Site that is uncovered or revealed either:

1. is of such a nature as to establish that any "technical data" on which CONTRACTOR is entitled to rely as provided in paragraph 4.02 is materially inaccurate; or

2. is of such a nature as to require a change in the Contract Documents; or

3. differs materially from that shown or indicated in the Contract Documents; or

4. is of an unusual nature, and differs materially from conditions ordinarily encountered and generally recognized as inherent in work of the character provided for in the Contract Documents;

then CONTRACTOR shall, promptly after becoming aware thereof and before further disturbing the subsurface or physical conditions or performing any Work in connection therewith (except in an emergency as required by paragraph 6.16.A), notify OWNER and ENGINEER in writing about such condition. CONTRACTOR shall not further disturb such condition or perform any Work in connection therewith (except as aforesaid) until receipt of written order to do so.

**

B. *ENGINEER's Review:* After receipt of written notice as required by paragraph 4.03.A, ENGINEER will promptly review the pertinent condition, determine the necessity of OWNER's obtaining additional exploration or tests with respect thereto, and advise OWNER in writing (with a copy to CONTRACTOR) of ENGINEER's findings and conclusions.

C. *Possible Price and Times Adjustments*

1. The Contract Price or the Contract Times, or both, will be equitably adjusted to the extent that the existence of such differing subsurface or physical condition causes an increase or decrease in CONTRACTOR's cost of, or time required for, performance of the Work; subject, however, to the following:

a. such condition must meet any one or more of the categories described in paragraph 4.03.A; and

b. with respect to Work that is paid for on a Unit Price Basis, any adjustment in Contract Price will be subject to the provisions of paragraphs 9.08 and 11.03.

2. CONTRACTOR shall not be entitled to any adjustment in the Contract Price or Contract Times if:

a. CONTRACTOR knew of the existence of such conditions at the time CONTRACTOR made a final commitment to OWNER in respect of Contract Price and Contract Times by the submission of a Bid or becoming bound under a negotiated contract; or

b. the existence of such condition could reasonably have been discovered or revealed as a result of any examination, investigation, exploration, test, or study of the Site and contiguous areas required by the Bidding Requirements or Contract Documents to be conducted by or for CONTRACTOR prior to CONTRACTOR's making such final commitment; or

c. CONTRACTOR failed to give the written notice within the time and as required by paragraph 4.03.A.

3. If OWNER and CONTRACTOR are unable to agree on entitlement to or on the amount or extent, if any, of any adjustment in the Contract Price or Contract Times, or both, a Claim may be made therefor as provided in paragraph 10.05. However, OWNER, ENGINEER, and ENGINEER's Consultants shall not be liable to CONTRACTOR for any claims, costs, losses, or damages (including but not limited to all fees and charges of engineers, architects, attorneys, and other professionals and all court or arbitration or other dispute resolution costs) sustained by CONTRACTOR on or in connection with any other project or anticipated project.

4.04 Underground Facilities

A. *Shown or Indicated:* The information and data shown or indicated in the Contract Documents with respect to existing Underground Facilities at or contiguous to the Site is based on information and data furnished to OWNER or ENGINEER by the owners of such Underground Facilities, including OWNER, or by others. Unless it is otherwise expressly provided in the Supplementary Conditions:

1. OWNER and ENGINEER shall not be responsible for the accuracy or completeness of any such information or data; and

2. the cost of all of the following will be included in the Contract Price, and CONTRACTOR shall have full responsibility for:

a. reviewing and checking all such information and data,

b. locating all Underground Facilities shown or indicated in the Contract Documents,

c. coordination of the Work with the owners of such Underground Facilities, including OWNER, during construction, and

d. the safety and protection of all such Underground Facilities and repairing any damage thereto resulting from the Work.

B. *Not Shown or Indicated*

1. If an Underground Facility is uncovered or revealed at or contiguous to the Site which was not shown or indicated, or not shown or indicated with

reasonable accuracy in the Contract Documents, CONTRACTOR shall, promptly after becoming aware thereof and before further disturbing conditions affected thereby or performing any Work in connection therewith (except in an emergency as required by paragraph 6.16.A), identify the owner of such Underground Facility and give written notice to that owner and to OWNER and ENGINEER. ENGINEER will promptly review the Underground Facility and determine the extent, if any, to which a change is required in the Contract Documents to reflect and document the consequences of the existence or location of the Underground Facility. During such time, CONTRACTOR shall be responsible for the safety and protection of such Underground Facility.

2. If ENGINEER concludes that a change in the Contract Documents is required, a Work Change Directive or a Change Order will be issued to reflect and document such consequences. An equitable *adjustment shall be made i n the Contract Price or Contract Times, or both, to the extent that they are attributable to the existence or location of any Underground Facility that was not shown or *indicated ~~or not shown or indicated with reasonable accuracy~~ in the Contract Documents and that CONTRACTOR did not know of and could not reasonably have been expected to be aware of or to have anticipated. If OWNER and CONTRACTOR are unable to agree on entitlement to or on the amount or extent, if any, of any such adjustment in Contract Price or Contract Times, OWNER or CONTRACTOR may make a Claim therefor as provided in paragraph 10.05.

4.05 Reference Points

A. OWNER shall provide engineering surveys to establish reference points for construction which in ENGINEER's judgment are necessary to enable CONTRACTOR to proceed with the Work. CONTRACTOR shall be responsible for laying out the Work, shall protect and preserve the established reference points and property monuments, and shall make no changes or relocations without the prior written approval of OWNER. CONTRACTOR shall report to ENGINEER whenever any reference point or property monument is lost or destroyed or requires relocation because of necessary changes in grades or locations, and shall be responsible for the accurate replacement or relocation of such reference points or property monuments by professionally qualified personnel.*

4.06 Hazardous Environmental Condition at Site

A. *Reports and Drawings:* Reference is made to the Supplementary Conditions for the identification of those* reports and drawings relating to a Hazardous Environmental Condition identified at the Site, if any, that have been utilized by the ENGINEER in the preparation of the Contract Documents. *

B. *Limited Reliance by CONTRACTOR on Technical Data Authorized:* CONTRACTOR may rely upon the general accuracy of the "technical data" contained in such reports and drawings, but such reports and drawings are not Contract Documents. Such "technical data" is identified in the Supplementary Conditions. Except for such reliance on such "technical data," CONTRACTOR may not rely upon or make any Claim against OWNER, ENGINEER or any of ENGINEER's Consultants with respect to:

1. the completeness of such reports and drawings for CONTRACTOR's purposes, including, but not limited to, any aspects of the means, methods, techniques, sequences and procedures of construction to be employed by CONTRACTOR and safety precautions and programs incident thereto; or

2. other data, interpretations, opinions and information contained in such reports or shown or indicated in such drawings; or

3. any CONTRACTOR interpretation of or conclusion drawn from any "technical data" or any such other data, interpretations, opinions or information.

C. CONTRACTOR shall not be responsible for any Hazardous Environmental Condition uncovered or revealed at the Site which was not shown or indicated in Drawings or Specifications or identified in the Contract Documents to be within the scope of the Work. CONTRACTOR shall be responsible for a Hazardous Environmental Condition created with any materials brought to the Site by CONTRACTOR, Subcontractors, Suppliers, or anyone else for whom CONTRACTOR is responsible.

D. If CONTRACTOR encounters a Hazardous Environmental Condition or if CONTRACTOR or anyone for whom CONTRACTOR is responsible creates a Hazardous Environmental Condition, CONTRACTOR shall immediately: (i) secure or otherwise isolate such condition; (ii) stop all Work in connection with such condition and in any area affected thereby (except in an emergency as required by paragraph 6.16); and (iii) notify OWNER and ENGINEER (and promptly thereafter confirm such notice in writing). OWNER shall promptly consult with ENGINEER concerning the necessity for OWNER to retain a qualified expert to evaluate such condition or take corrective action, if any.

E. CONTRACTOR shall not be required to resume Work in connection with such condition or in any affected area until after OWNER has obtained any required permits related thereto and delivered to CONTRACTOR written notice: (i) specifying that such condition and any affected area is or has been rendered safe for the resumption of Work; or (ii) specifying any special conditions under which such Work may be resumed safely. If OWNER and CONTRACTOR cannot agree as to entitlement to or on the

amount or extent, if any, of any adjustment in Contract Price or Contract Times, or both, as a result of such Work stoppage or such special conditions under which Work is agreed to be resumed by CONTRACTOR, either party may make a Claim therefor as provided in paragraph 10.05.

F. If after receipt of such written notice CONTRACTOR does not agree to resume such Work based on a reasonable belief it is unsafe, or does not agree to resume such Work under such special conditions, then OWNER may order the portion of the Work that is in the area affected by such condition to be deleted from the Work. If OWNER and CONTRACTOR cannot agree as to entitlement to or on the amount or extent, if any, of an adjustment in Contract Price or Contract Times as a result of deleting such portion of the Work, then either party may make a Claim therefor as provided in paragraph 10.05. OWNER may have such deleted portion of the Work performed by OWNER's own forces or others in accordance with Article 7.

G. To the fullest extent permitted by Laws and Regulations, OWNER shall indemnify and hold harmless CONTRACTOR, Subcontractors, ENGINEER, ENGINEER's Consultants and the officers, directors, partners, employees, agents, other consultants, and subcontractors of each and any of them from and against all claims, costs, losses, and damages (including but not limited to all fees and charges of engineers, architects, attorneys, and other professionals and all court or arbitration or other dispute resolution costs) arising out of or relating to a Hazardous Environmental Condition, provided that such Hazardous Environmental Condition: (i) was not shown or indicated in the Drawings or Specifications or identified in the Contract Documents to be included within the scope of the Work, and (ii) was not created by CONTRACTOR or by anyone for whom CONTRACTOR is responsible. Nothing in this paragraph 4.06.E shall obligate OWNER to indemnify any individual or entity from and against the consequences of that individual's or entity's own negligence.

H. To the fullest extent permitted by Laws and Regulations, CONTRACTOR shall indemnify and hold harmless OWNER, ENGINEER, ENGINEER's Consultants, and the officers, directors, partners, employees, agents, other consultants, and subcontractors of each and any of them from and against all claims, costs, losses, and damages (including but not limited to all fees and charges of engineers, architects, attorneys, and other professionals and all court or arbitration or other dispute resolution costs) arising out of or relating to a Hazardous Environmental Condition created by CONTRACTOR or by anyone for whom CONTRACTOR is responsible. Nothing in this paragraph 4.06.F shall obligate CONTRACTOR to indemnify any individual or entity from and against the consequences of that individual's or entity's own negligence.

I. The provisions of paragraphs 4.02, 4.03, and 4.04 are not intended to apply to a Hazardous Environmental Condition uncovered or revealed at the Site.

ARTICLE 5 - BONDS AND INSURANCE

5.01 Performance, Payment, and Other Bonds

A. CONTRACTOR shall furnish performance and payment Bonds, each in an amount at least equal to the Contract Price as security for the faithful performance and payment of all CONTRACTOR's obligations under the Contract Documents. These Bonds shall remain in effect at least until one year after the date when final payment becomes due, except as provided otherwise by Laws or Regulations or by the Contract Documents. CONTRACTOR shall also furnish such other Bonds as are required by the Contract Documents. *

B. All Bonds shall be in the form prescribed by the Contract Documents except as provided otherwise by Laws or Regulations, and shall be executed by such sureties as are named in the current list of "Companies Holding Certificates of Authority as Acceptable Sureties on Federal Bonds and as Acceptable Reinsuring Companies" as published in Circular 570 (amended) by the Financial Management Service, Surety Bond Branch, U.S. Department of the Treasury. All Bonds signed by an agent must be accompanied by a certified copy of such agent's authority to act.

C. If the surety on any Bond furnished by CONTRACTOR is declared bankrupt or becomes insolvent or its right to do business is terminated in any state where any part of the Project is located or it ceases to meet the requirements of paragraph 5.01.B, CONTRACTOR shall within 20 days thereafter substitute another Bond and surety, both of which shall comply with the requirements of paragraphs 5.01.B and 5.02.

5.02 Licensed Sureties and Insurers

A. All Bonds and insurance required by the Contract Documents to be purchased and maintained by OWNER or CONTRACTOR shall be obtained from surety or insurance companies that are duly licensed or authorized in the jurisdiction in which the Project is located to issue Bonds or insurance policies for the limits and coverages so required. Such surety and insurance companies shall also meet such additional requirements and qualifications as may be provided in the Supplementary Conditions.

5.03 Certificates of Insurance

A. CONTRACTOR shall deliver to OWNER, with copies to each additional insured identified in the Supplementary Conditions, certificates of insurance (and other evidence of insurance requested by OWNER or any other additional insured) which CONTRACTOR is required to *****purchase and maintain. ~~OWNER shall deliver to CONTRACTOR, with copies to each additional insured identified in the Supplementary Conditions, certificates of insurance (and other evidence of insurance requested by CONTRACTOR or any other additional insured) which OWNER is required to purchase and maintain.~~

5.04 CONTRACTOR's Liability Insurance

* A. CONTRACTOR shall purchase and maintain such liability and other insurance as is appropriate for the Work being performed and as will provide protection from claims set forth below which may arise out of or result from CONTRACTOR's performance of the Work and CONTRACTOR's other obligations under the Contract Documents, whether it is to be performed by CONTRACTOR, any Subcontractor or Supplier, or by anyone directly or indirectly employed by any of them to perform any of the Work, or by anyone for whose acts any of them may be liable:

1. claims under workers' compensation, disability benefits, and other similar employee benefit acts;

2. claims for damages because of bodily injury, occupational sickness or disease, or death of CONTRACTOR's employees;

3. claims for damages because of bodily injury, sickness or disease, or death of any person other than CONTRACTOR's employees;

4. claims for damages insured by reasonably available personal injury liability coverage which are sustained: (i) by any person as a result of an offense directly or indirectly related to the employment of such person by CONTRACTOR, or (ii) by any other person for any other reason;

5. claims for damages, other than to the Work itself, because of injury to or destruction of tangible property wherever located, including loss of use resulting therefrom; and

6. claims for damages because of bodily injury or death of any person or property damage arising out of the ownership, maintenance or use of any motor vehicle.

B. The policies of insurance so required by this paragraph 5.04 to be purchased and maintained shall:

* 1. with respect to insurance required by paragraphs 5.04.A.3 through 5.04.A.6 inclusive, include as additional insureds (subject to any customary exclusion in respect of professional liability) OWNER, ENGINEER, ENGINEER's Consultants, and any other individuals or entities identified in the Supplementary Conditions, all of whom shall be listed as additional insureds, and include coverage for the respective officers, directors, partners, employees, agents, and other consultants and subcontractors of each and any of all such additional insureds, and the insurance afforded to these additional insureds shall provide primary coverage for all claims covered thereby;

2. include at least the specific coverages and be written for not less than the limits of liability provided in the Supplementary Conditions or required by Laws or Regulations, whichever is greater;

3. include completed operations insurance;

4. include contractual liability insurance covering CONTRACTOR's indemnity obligations under paragraphs 6.07, 6.11, and 6.20;

5. contain a provision or endorsement that the coverage afforded will not be canceled, materially changed or renewal refused until at least thirty days prior written notice has been given to OWNER and CONTRACTOR and to each other additional insured identified in the Supplementary Conditions to whom a certificate of insurance has been issued (and the certificates of insurance furnished by the CONTRACTOR pursuant to paragraph 5.03 will so provide);

6. remain in effect at least until final payment and at all times thereafter when CONTRACTOR may be correcting, removing, or replacing defective Work in accordance with paragraph 13.07; and

7. with respect to completed operations insurance, and any insurance coverage written on a claims-made basis, remain in effect for at least two years after final payment (and CONTRACTOR shall furnish OWNER and each other additional insured identified in the Supplementary Conditions, to whom a certificate of insurance has been issued, evidence satisfactory to OWNER and any such additional insured of continuation of such insurance at final payment and one year thereafter).*

~~*5.05* OWNER's Liability Insurance~~

~~* A. In addition to the insurance required to be provided by CONTRACTOR under paragraph 5.04, OWNER, at OWNER's option, may purchase and maintain at OWNER's expense OWNER's own liability insurance as will protect OWNER against claims which may arise from operations under the Contract Documents.~~

~~*5.06* Property Insurance~~

~~* A. Unless otherwise provided in the Supplementary Conditions, OWNER shall purchase and maintain property insurance upon the Work at the Site in the amount of the full replacement cost thereof (subject to such deductible amounts as may be provided in the Supplementary Conditions or required by Laws and Regulations). This insurance shall:~~

~~1. include the interests of OWNER, CONTRACTOR, Subcontractors, ENGINEER, ENGINEER's Consultants, and any other~~

~~individuals or entities identified in the Supplementary Conditions, and the officers, directors, partners, employees, agents, and other consultants and subcontractors of each and any of them, each of whom is deemed to have an insurable interest and shall be listed as an additional insured;~~

~~2. be written on a Builder's Risk "all risk" or open peril or special causes of loss policy form that shall at least include insurance for physical loss or damage to the Work, temporary buildings, false work, and materials and equipment in transit, and shall insure against at least the following perils or causes of loss: fire, lightning, extended coverage, theft, vandalism and malicious mischief, earthquake, collapse, debris removal, demolition occasioned by enforcement of Laws and Regulations, water damage, and such other perils or causes of loss as may be specifically required by the Supplementary Conditions;~~

~~3. include expenses incurred in the repair or replacement of any insured property (including but not limited to fees and charges of engineers and architects);~~

~~4. cover materials and equipment stored at the Site or at another location that was agreed to in writing by OWNER prior to being incorporated in the Work, provided that such materials and equipment have been included in an Application for Payment recommended by ENGINEER;~~

~~5. allow for partial utilization of the Work by OWNER;~~

~~6. include testing and startup; and~~

~~7. be maintained in effect until final payment is made unless otherwise agreed to in writing by OWNER, CONTRACTOR, and ENGINEER with 30 days written notice to each other additional insured to whom a certificate of insurance has been issued.~~

~~* B. OWNER shall purchase and maintain such boiler and machinery insurance or additional property insurance as may be required by the Supplementary Conditions or Laws and Regulations which will include the interests of OWNER, CONTRACTOR, Subcontractors, ENGINEER, ENGINEER's Consultants, and any other individuals or entities identified in the Supplementary Conditions, each of whom is deemed to have an insurable interest and shall be listed as an insured or additional insured.~~

~~* C. All the policies of insurance (and the certificates or other evidence thereof) required to be purchased and maintained in accordance with paragraph 5.06 will contain a provision or endorsement that the coverage afforded will not be canceled or materially changed or renewal refused until at least 30 days prior written notice has been given to OWNER and CONTRACTOR and to each other additional insured to whom a certificate of insurance has been issued and will contain waiver provisions in accordance with paragraph 5.07.~~

~~* D. OWNER shall not be responsible for purchasing and maintaining any property insurance specified in this paragraph 5.06 to protect the interests of CONTRACTOR, Subcontractors, or others in the Work to the extent of any deductible amounts that are identified in the Supplementary Conditions. The risk of loss within such identified deductible amount will be borne by CONTRACTOR, Subcontractors, or others suffering any such loss, and if any of them wishes property insurance coverage within the limits of such amounts, each may purchase and maintain it at the purchaser's own expense.~~

~~* E. If CONTRACTOR requests in writing that other special insurance be included in the property insurance policies provided under paragraph 5.06, OWNER shall, if possible, include such insurance, and the cost thereof will be charged to CONTRACTOR by appropriate Change Order or Written Amendment. Prior to commencement of the Work at the Site, OWNER shall in writing advise CONTRACTOR whether or not such other insurance has been procured by OWNER.~~

5.07 Waiver of Rights

* A. OWNER and CONTRACTOR intend that all policies purchased in accordance with paragraph 5.06 will protect OWNER, CONTRACTOR, Subcontractors, ENGINEER, ENGINEER's Consultants, and all other individuals or entities identified in the Supplementary Conditions to be listed as insureds or additional insureds (and the officers, directors, partners, employees, agents, and other consultants and subcontractors of each and any of them) in such policies and will provide primary coverage for all losses and damages caused by the perils or causes of loss covered thereby. All such policies shall contain provisions to the effect that in the event of payment of any loss or damage the insurers will have no rights of recovery against any of the insureds or additional insureds thereunder. OWNER and CONTRACTOR waive all rights against each other and their respective officers, directors, partners, employees, agents, and other consultants and subcontractors of each and any of them for all losses and damages caused by, arising out of or resulting from any of the perils or causes of loss covered by such policies and any other property insurance applicable to the Work; and, in addition, waive all such rights against Subcontractors, ENGINEER, ENGINEER's Consultants, and all other individuals or entities identified in the Supplementary Conditions to be listed as insureds or additional insureds (and the officers, directors, partners, employees, agents, and other consultants and subcontractors of each and any of them) under such policies for losses and damages so caused. None of the above waivers shall extend to the rights that any party making such waiver may have to the proceeds of insurance * ~~held by OWNER as trustee or~~ otherwise payable under any policy so issued.

B. OWNER waives all rights against CONTRACTOR, Subcontractors, ENGINEER, ENGINEER's Consultants, and the officers, directors, partners, employees, agents, and other consultants and subcontractors of each and any of them for:

1. loss due to business interruption, loss of use, or other consequential loss extending beyond direct physical loss or damage to OWNER's property or the Work caused by, arising out of, or resulting from fire or other peril whether or not insured by OWNER; and

2. loss or damage to the completed Project or part thereof caused by, arising out of, or resulting from fire or other insured peril or cause of loss covered by any property insurance maintained on the completed Project or part thereof by OWNER during partial utilization pursuant to paragraph 14.05, after Substantial Completion pursuant to paragraph 14.04, or after final payment pursuant to paragraph 14.07.

C. Any insurance policy maintained by OWNER covering any loss, damage or consequential loss referred to in paragraph 5.07.B shall contain provisions to the effect that in the event of payment of any such loss, damage, or consequential loss, the insurers will have no rights of recovery against CONTRACTOR, Subcontractors, ENGINEER, or ENGINEER's Consultants and the officers, directors, partners, employees, agents, and other consultants and subcontractors of each and any of them.

5.08 Receipt and Application of Insurance Proceeds

***** ~~A. Any insured loss under the policies of insurance required by paragraph 5.06 will be adjusted with OWNER and made payable to OWNER as fiduciary for the insureds, as their interests may appear, subject to the requirements of any applicable mortgage clause and of paragraph 5.08.B. OWNER shall deposit in a separate account any money so received and shall distribute it in accordance with such agreement as the parties in interest may reach. If no other special agreement is reached, the damaged Work shall be repaired or replaced, the moneys so received applied on account thereof, and the Work and the cost thereof covered by an appropriate Change Order or Written Amendment.~~

***** ~~B. OWNER as fiduciary shall have power to adjust and settle any loss with the insurers unless one of the parties in interest shall object in writing within 15 days after the occurrence of loss to OWNER's exercise of this power. If such objection be made, OWNER as fiduciary shall make settlement with the insurers in accordance with such agreement as the parties in interest may reach. If no such agreement among the parties in interest is reached, OWNER as fiduciary shall adjust and settle the loss with the insurers and, if required in writing by any party in interest, OWNER as fiduciary shall give bond for the proper performance of such duties.~~

5.09 Acceptance of Bonds and Insurance; Option to Replace

***** ~~A. If either OWNER or CONTRACTOR has any objection to the coverage afforded by or other provisions of the Bonds or insurance required to be purchased and maintained by the other party in accordance with Article 5 on the basis of non-conformance with the Contract Documents, the objecting party shall so notify the other party in writing within 10 days after receipt of the certificates (or other evidence requested) required by paragraph 2.05.C. OWNER and CONTRACTOR shall each provide to the other such additional information in respect of insurance provided as the other may reasonably request. If either party does not purchase or maintain all of the Bonds and insurance required of such party by the Contract Documents, such party shall notify the other party in writing of such failure to purchase prior to the start of the Work, or of such failure to maintain prior to any change in the required coverage. Without prejudice to any other right or remedy, the other party may elect to obtain equivalent Bonds or insurance to protect such other party's interests at the expense of the party who was required to provide such coverage, and a Change Order shall be issued to adjust the Contract Price accordingly.~~

5.10 Partial Utilization, Acknowledgment of Property Insurer

A. If OWNER finds it necessary to occupy or use a portion or portions of the Work prior to Substantial Completion of all the Work as provided in paragraph 14.05, no such use or occupancy shall commence before the insurers providing the property insurance pursuant to paragraph 5.06 have acknowledged notice thereof and in writing effected any changes in coverage necessitated thereby. The insurers providing the property insurance shall consent by endorsement on the policy or policies, but the property insurance shall not be canceled or permitted to lapse on account of any such partial use or occupancy.

ARTICLE 6 - CONTRACTOR'S RESPONSIBILITIES

6.01 Supervision and Superintendence

A. CONTRACTOR shall supervise, inspect, and direct the Work competently and efficiently, devoting such attention thereto and applying such skills and expertise as may be necessary to perform the Work in accordance with the Contract Documents. CONTRACTOR shall be solely responsible for the means, methods, techniques, sequences, and procedures of construction, but CONTRACTOR shall not be responsible for the negligence of OWNER or ENGINEER in the design or specification of a specific means, method, technique, sequence, or procedure of construction which is shown or indicated in and expressly required by the Contract Documents. CONTRACTOR shall be responsible to see that the completed Work complies accurately with the Contract Documents.

* ~~B. At all times during the progress of the Work, CONTRACTOR shall assign a competent resident superintendent thereto who shall not be replaced without written notice to OWNER and ENGINEER except under extraordinary circumstances. The superintendent will be CONTRACTOR's representative at the Site and shall have authority to act on behalf of CONTRACTOR. All communications given to or received from the superintendent shall be binding on CONTRACTOR.~~

6.02 Labor; Working Hours

A. CONTRACTOR shall provide competent, suitably qualified personnel to survey, lay out, and construct the Work as required by the Contract Documents. CONTRACTOR shall at all times maintain good discipline and order at the Site.

B. Except as otherwise required for the safety or protection of persons or the Work or property at the Site or adjacent thereto, and except as otherwise stated in the Contract Documents, all Work at the Site shall be performed during regular working hours, and CONTRACTOR will not permit overtime work or the performance of Work on Saturday, Sunday, or any legal holiday without OWNER's written consent (which will not be unreasonably withheld) given after prior written notice to ENGINEER.

6.03 Services, Materials, and Equipment

A. Unless otherwise specified in the General Requirements, CONTRACTOR shall provide and assume full responsibility for all services, materials, equipment, labor, transportation, construction equipment and machinery, tools, appliances, fuel, power, light, heat, telephone, water, sanitary facilities, temporary facilities, and all other facilities and incidentals necessary for the performance, testing, start-up, and completion of the Work.

B. All materials and equipment incorporated into the Work shall be as specified or, if not specified, shall be of good quality and new, except as otherwise provided in the Contract Documents. All warranties and guarantees specifically called for by the Specifications shall expressly run to the benefit of OWNER. If required by ENGINEER, CONTRACTOR shall furnish satisfactory evidence (including reports of required tests) as to the source, kind, and quality of materials and equipment. All materials and equipment shall be stored, applied, installed, connected, erected, protected, used, cleaned, and conditioned in accordance with instructions of the applicable Supplier, except as otherwise may be provided in the Contract Documents.

6.04 Progress Schedule

A. CONTRACTOR shall adhere to the progress schedule established in accordance with paragraph 2.07 as it may be adjusted from time to time as provided below.

1. CONTRACTOR shall submit to ENGINEER for acceptance (to the extent indicated in paragraph 2.07) proposed adjustments in the progress schedule that will not result in changing the Contract Times (or Milestones). Such adjustments will conform generally to the progress schedule then in effect and additionally will comply with any provisions of the General Requirements applicable thereto.

2. Proposed adjustments in the progress schedule that will change the Contract Times (or Milestones) shall be submitted in accordance with the requirements of Article 12. Such adjustments may only be made by a Change Order or Written Amendment in accordance with Article 12.

*

6.05 Substitutes and "Or-Equals"

A. Whenever an item of material or equipment is specified or described in the Contract Documents by using the name of a proprietary item or the name of a particular Supplier, the specification or description is intended to establish the type, function, appearance, and quality required. Unless the specification or description contains or is followed by words reading that no like, equivalent, or "or-equal" item or no substitution is permitted, other items of material or equipment or material or equipment of other Suppliers may be submitted to ENGINEER for review under the circumstances described below.

1. *"Or-Equal" Items:* If in ENGINEER's sole discretion an item of material or equipment proposed by CONTRACTOR is functionally equal to that named and sufficiently similar so that no change in related Work will be required, it may be considered by ENGINEER as an "or-equal" item, in which case review and approval of the proposed item may, in ENGINEER's sole discretion, be accomplished without compliance with some or all of the requirements for approval of proposed substitute items. For the purposes of this paragraph 6.05.A.1, a proposed item of material or equipment will be considered functionally equal to an item so named if:

a. in the exercise of reasonable judgment ENGINEER determines that: (i) it is at least equal in quality, durability, appearance, strength, and design characteristics; (ii) it will reliably perform at least equally well the function imposed by the design concept of the completed Project as a functioning whole, and;

b. CONTRACTOR certifies that: (i) there is no increase in cost to the OWNER; and (ii) it will conform substantially, even with deviations, to the detailed requirements of the item named in the Contract Documents.

2. Substitute Items

a. If in ENGINEER's sole discretion an item of material or equipment proposed by CONTRACTOR does not qualify as an "or-equal" item under paragraph 6.05.A.1, it will be considered a proposed substitute item.

b. CONTRACTOR shall submit sufficient information as provided below to allow ENGINEER to determine that the item of material or equipment proposed is essentially equivalent to that named and an acceptable substitute therefor. Requests for review of proposed substitute items of material or equipment will not be accepted by ENGINEER from anyone other than CONTRACTOR.

c. The procedure for review by ENGINEER will be as set forth in paragraph 6.05.A.2.d, as supplemented in the General Requirements and as ENGINEER may decide is appropriate under the circumstances.

d. CONTRACTOR shall first make written application to ENGINEER for review of a proposed substitute item of material or equipment that CONTRACTOR seeks to furnish or use. The application shall certify that the proposed substitute item will perform adequately the functions and achieve the results called for by the general design, be similar in substance to that specified, and be suited to the same use as that specified. The application will state the extent, if any, to which the use of the proposed substitute item will prejudice CONTRACTOR's achievement of Substantial Completion on time, whether or not use of the proposed substitute item in the Work will require a change in any of the Contract Documents (or in the provisions of any other direct contract with OWNER for work on the Project) to adapt the design to the proposed substitute item and whether or not incorporation or use of the proposed substitute item in connection with the Work is subject to payment of any license fee or royalty. All variations of the proposed substitute item from that specified will be identified in the application, and available engineering, sales, maintenance, repair, and replacement services will be indicated. The application will also contain an itemized estimate of all costs or credits that will result directly or indirectly from use of such substitute item, including costs of redesign and claims of other contractors affected by any resulting change, all of which will be considered by ENGINEER in evaluating the proposed substitute item. ENGINEER may require CONTRACTOR to furnish additional data about the proposed substitute item.

B. *Substitute Construction Methods or Procedures:* If a specific means, method, technique, sequence, or procedure of construction is shown or indicated in and expressly required by the Contract Documents, CONTRACTOR may furnish or utilize a substitute means, method, technique, sequence, or procedure of construction approved by ENGINEER. CONTRACTOR shall submit sufficient information to allow ENGINEER, in ENGINEER's sole discretion, to determine that the substitute proposed is equivalent to that expressly called for by the Contract Documents. The procedure for review by ENGINEER will be similar to that provided in subparagraph 6.05.A.2.

C. *Engineer's Evaluation:* ENGINEER will be allowed a reasonable time within which to evaluate each proposal or submittal made pursuant to paragraphs 6.05.A and 6.05.B. ENGINEER will be the sole judge of acceptability. No "or-equal" or substitute will be ordered, installed or utilized until ENGINEER's review is complete, which will be evidenced by either a Change Order for a substitute or an approved Shop Drawing for an "or equal." ENGINEER will advise CONTRACTOR in writing of any negative determination.

D. *Special Guarantee:* OWNER may require CONTRACTOR to furnish at CONTRACTOR's expense a special performance guarantee or other surety with respect to any substitute.

E. *ENGINEER's Cost Reimbursement:* ENGINEER will record time required by ENGINEER and ENGINEER's Consultants in evaluating substitute proposed or submitted by CONTRACTOR pursuant to paragraphs 6.05.A.2 and 6.05.B and in making changes in the Contract Documents (or in the provisions of any other direct contract with OWNER for work on the Project) occasioned thereby. Whether or not ENGINEER approves a substitute item so proposed or submitted by CONTRACTOR, CONTRACTOR shall reimburse OWNER for the charges of ENGINEER and ENGINEER's Consultants for evaluating each such proposed substitute.

F. *CONTRACTOR's Expense:* CONTRACTOR shall provide all data in support of any proposed substitute or "or-equal" at CONTRACTOR's expense.

6.06 Concerning Subcontractors, Suppliers, and Others

A. CONTRACTOR shall not employ any Subcontractor, Supplier, or other individual or entity (including those acceptable to OWNER as indicated in paragraph 6.06.B), whether initially or as a replacement, against whom OWNER may have reasonable objection. CONTRACTOR shall not be required to employ any Subcontractor, Supplier, or other individual or entity to furnish or perform any of the Work against whom CONTRACTOR has reasonable objection.

B. If the Supplementary Conditions require the identity of certain Subcontractors, Suppliers, or other individuals or entities to be submitted to OWNER in advance for acceptance by OWNER by a specified date prior to the Effective Date of the Agreement, and if CONTRACTOR has submitted a list thereof in accordance

with the Supplementary Conditions, OWNER's acceptance (either in writing or by failing to make written objection thereto by the date indicated for acceptance or objection in the Bidding Documents or the Contract Documents) of any such Subcontractor, Supplier, or other individual or entity so identified may be revoked on the basis of reasonable objection after due investigation. CONTRACTOR shall submit an acceptable replacement for the rejected Subcontractor, Supplier, or other individual or entity, and the Contract Price will be adjusted by the difference in the cost occasioned by such replacement, and an appropriate Change Order will be issued or Written Amendment signed. No acceptance by OWNER of any such Subcontractor, Supplier, or other individual or entity, whether initially or as a replacement, shall constitute a waiver of any right of OWNER or ENGINEER to reject defective Work.

C. CONTRACTOR shall be fully responsible to OWNER and ENGINEER for all acts and omissions of the Subcontractors, Suppliers, and other individuals or entities performing or furnishing any of the Work just as CONTRACTOR is responsible for CONTRACTOR's own acts and omissions. Nothing in the Contract Documents shall create for the benefit of any such Subcontractor, Supplier, or other individual or entity any contractual relationship between OWNER or ENGINEER and any such Subcontractor, Supplier or other individual or entity, nor shall it create any obligation on the part of OWNER or ENGINEER to pay or to see to the payment of any moneys due any such Subcontractor, Supplier, or other individual or entity except as may otherwise be required by Laws and Regulations.

D. CONTRACTOR shall be solely responsible for scheduling and coordinating the Work of Subcontractors, Suppliers, and other individuals or entities performing or furnishing any of the Work under a direct or indirect contract with CONTRACTOR.

E. CONTRACTOR shall require all Subcontractors, Suppliers, and such other individuals or entities performing or furnishing any of the Work to communicate with ENGINEER through CONTRACTOR.

** F. The divisions and sections of the Specifications and the identifications of any Drawings shall not control CONTRACTOR in dividing the Work among Subcontractors or Suppliers or delineating the Work to be performed by any specific trade.

G. All Work performed for CONTRACTOR by a Subcontractor or Supplier will be pursuant to an appropriate agreement between CONTRACTOR and the Subcontractor or Supplier which specifically binds the Subcontractor or Supplier to the applicable terms and conditions of the Contract Documents for the benefit of OWNER and ENGINEER. Whenever any such agreement is with a Subcontractor or Supplier who is listed as an additional insured on the property insurance provided in paragraph 5.06, the agreement between the CONTRACTOR and the Subcontractor or Supplier will contain provisions whereby the Subcontractor or Supplier waives all rights against OWNER, CONTRACTOR, ENGINEER, ENGINEER's Consultants, and all other individuals or entities identified in the Supplementary Conditions to be listed as insureds or additional insureds (and the officers, directors, partners, employees, agents, and other consultants and subcontractors of each and any of them) for all losses and damages caused by, arising out of, relating to, or resulting from any of the perils or causes of loss covered by such policies and any other property insurance applicable to the Work. If the insurers on any such policies require separate waiver forms to be signed by any Subcontractor or Supplier, CONTRACTOR will obtain the same.

6.07 Patent Fees and Royalties

A. CONTRACTOR shall pay all license fees and royalties and assume all costs incident to the use in the performance of the Work or the incorporation in the Work of any invention, design, process, product, or device which is the subject of patent rights or copyrights held by others. If a particular invention, design, process, product, or device is specified in the Contract Documents for use in the performance of the Work and if to the actual knowledge of OWNER or ENGINEER its use is subject to patent rights or copyrights calling for the payment of any license fee or royalty to others, the existence of such rights shall be disclosed by OWNER in the Contract Documents. To the fullest extent permitted by Laws and Regulations, CONTRACTOR shall indemnify and hold harmless OWNER, ENGINEER, ENGINEER's Consultants, and the officers, directors, partners, employees or agents, and other consultants of each and any of them from and against all claims, costs, losses, and damages (including but not limited to all fees and charges of engineers, architects, attorneys, and other professionals and all court or arbitration or other dispute resolution costs) arising out of or relating to any infringement of patent rights or copyrights incident to the use in the performance of the Work or resulting from the incorporation in the Work of any invention, design, process, product, or device not specified in the Contract Documents.

6.08 Permits

** A. Unless otherwise provided in the Supplementary Conditions, CONTRACTOR shall obtain and pay for all construction permits and licenses. OWNER shall assist CONTRACTOR, when necessary, in obtaining such permits and licenses. CONTRACTOR shall pay all governmental charges and inspection fees necessary for the prosecution of the Work which are applicable at the time of opening of Bids, or, if there are no Bids, on the Effective Date of the Agreement. CONTRACTOR shall pay all charges of utility owners for connections to the Work, and OWNER shall pay all charges of such utility owners for capital costs related thereto, such as plant investment fees.

6.09 Laws and Regulations

A. CONTRACTOR shall give all notices and comply with all Laws and Regulations applicable to the performance of the Work. Except where otherwise expressly required by applicable Laws and Regulations,

neither OWNER nor ENGINEER shall be responsible for monitoring CONTRACTOR's compliance with any Laws or Regulations.

B. If CONTRACTOR performs any Work knowing or having reason to know that it is contrary to Laws or Regulations, CONTRACTOR shall bear all claims, costs, losses, and damages (including but not limited to all fees and charges of engineers, architects, attorneys, and other professionals and all court or arbitration or other dispute resolution costs) arising out of or relating to such Work; however, it shall not be CONTRACTOR's primary responsibility to make certain that the Specifications and Drawings are in accordance with Laws and Regulations, but this shall not relieve CONTRACTOR of CONTRACTOR's obligations under paragraph 3.03.

C. Changes in Laws or Regulations not known at the time of opening of Bids (or, on the Effective Date of the Agreement if there were no Bids) having an effect on the cost or time of performance of the Work may be the subject of an adjustment in Contract Price or Contract Times. If OWNER and CONTRACTOR are unable to agree on entitlement to or on the amount or extent, if any, of any such adjustment, a Claim may be made therefor as provided in paragraph 10.05.

** *6.10* Taxes

A. CONTRACTOR shall pay all sales, consumer, use, and other similar taxes required to be paid by CONTRACTOR in accordance with the Laws and Regulations of the place of the Project which are applicable during the performance of the Work.

***6.11* Use of Site and Other Areas

A. *Limitation on Use of Site and Other Areas*

1. CONTRACTOR shall confine construction equipment, the storage of materials and equipment, and the operations of workers to the Site and other areas permitted by Laws and Regulations, and shall not unreasonably encumber the Site and other areas with construction equipment or other materials or equipment. CONTRACTOR shall assume full responsibility for any damage to any such land or area, or to the owner or occupant thereof, or of any adjacent land or areas resulting from the performance of the Work.

2. Should any claim be made by any such owner or occupant because of the performance of the Work, CONTRACTOR shall promptly settle with such other party by negotiation or otherwise resolve the claim by arbitration or other dispute resolution proceeding or at law.

3. To the fullest extent permitted by Laws and Regulations, CONTRACTOR shall indemnify and hold harmless OWNER, ENGINEER, ENGINEER's Consultant, and the officers, directors, partners, employees, agents, and other consultants of each and any of them from and against all claims, costs, losses, and damages (including but not limited to all fees and charges of engineers, architects, attorneys, and other professionals and all court or arbitration or other dispute resolution costs) arising out of or relating to any claim or action, legal or equitable, brought by any such owner or occupant against OWNER, ENGINEER, or any other party indemnified hereunder to the extent caused by or based upon CONTRACTOR's performance of the Work.

B. *Removal of Debris During Performance of the Work:* During the progress of the Work CONTRACTOR shall keep the Site and other areas free from accumulations of waste materials, rubbish, and other debris. Removal and disposal of such waste materials, rubbish, and other debris shall conform to applicable Laws and Regulations.

C. *Cleaning:* Prior to Substantial Completion of the Work CONTRACTOR shall clean the Site and make it ready for utilization by OWNER. At the completion of the Work CONTRACTOR shall remove from the Site all tools, appliances, construction equipment and machinery, and surplus materials and shall restore to original condition all property not designated for alteration by the Contract Documents.

D. *Loading Structures:* CONTRACTOR shall not load nor permit any part of any structure to be loaded in any manner that will endanger the structure, nor shall CONTRACTOR subject any part of the Work or adjacent property to stresses or pressures that will endanger it.

6.12 Record Documents

A. CONTRACTOR shall maintain in a safe place at the Site one record copy of all Drawings, Specifications, Addenda, Written Amendments, Change Orders, Work Change Directives, Field Orders, and written interpretations and clarifications in good order and annotated to show changes made during construction. These record documents together with all approved Samples and a counterpart of all approved Shop Drawings will be available to ENGINEER for reference. Upon completion of the Work, these record documents, Samples, and Shop Drawings will be delivered to ENGINEER for OWNER.

6.13 Safety and Protection

A. CONTRACTOR shall be solely responsible for initiating, maintaining and supervising all safety precautions and programs in connection with the Work. CONTRACTOR shall take all necessary precautions for the safety of, and shall provide the necessary protection to prevent damage, injury or loss to:

1. all persons on the Site or who may be affected by the Work;

2. all the Work and materials and equipment to be incorporated therein, whether in storage on or off the Site; and

3. other property at the Site or adjacent thereto, including trees, shrubs, lawns, walks, pavements, roadways, structures, utilities, and Underground Facilities not designated for removal, relocation, or replacement in the course of construction.

B. CONTRACTOR shall comply with all applicable Laws and Regulations relating to the safety of persons or property, or to the protection of persons or property from damage, injury, or loss; and shall erect and maintain all necessary safeguards for such safety and protection. CONTRACTOR shall notify owners of adjacent property and of Underground Facilities and other utility owners when prosecution of the Work may affect them, and shall cooperate with them in the protection, removal, relocation, and replacement of their property. All damage, injury, or loss to any property referred to in paragraph 6.13.A.2 or 6.13.A.3 caused, directly or indirectly, in whole or in part, by CONTRACTOR, any Subcontractor, Supplier, or any other individual or entity directly or indirectly employed by any of them to perform any of the Work, or anyone for whose acts any of them may be liable, shall be remedied by CONTRACTOR (except damage or loss attributable to the fault of Drawings or Specifications or to the acts or omissions of OWNER or ENGINEER or ENGINEER's Consultant, or anyone employed by any of them, or anyone for whose acts any of them may be liable, and not attributable, directly or indirectly, in whole or in part, to the fault or negligence of CONTRACTOR or any Subcontractor, Supplier, or other individual or entity directly or indirectly employed by any of them). CONTRACTOR's duties and responsibilities for safety and for protection of the Work shall continue until such time as all the Work is completed and ENGINEER has issued a notice to OWNER and CONTRACTOR in accordance with paragraph 14.07.B that the Work is acceptable (except as otherwise expressly provided in connection with Substantial Completion).

6.14 Safety Representative

A. CONTRACTOR shall designate a qualified and experienced safety representative at the Site whose duties and responsibilities shall be the prevention of accidents and the maintaining and supervising of safety precautions and programs.

6.15 Hazard Communication Programs

A. CONTRACTOR shall be responsible for coordinating any exchange of material safety data sheets or other hazard communication information required to be made available to or exchanged between or among employers at the Site in accordance with Laws or Regulations.

6.16 Emergencies

A. In emergencies affecting the safety or protection of persons or the Work or property at the Site or adjacent thereto, CONTRACTOR is obligated to act to prevent threatened damage, injury, or loss. CONTRACTOR shall give ENGINEER prompt written notice if CONTRACTOR believes that any significant changes in the Work or variations from the Contract Documents have been caused thereby or are required as a result thereof. If ENGINEER determines that a change in the Contract Documents is required because of the action taken by CONTRACTOR in response to such an emergency, a Work Change Directive or Change Order will be issued.

6.17 Shop Drawings and Samples

A. CONTRACTOR shall submit Shop Drawings to ENGINEER for review and approval in accordance with the acceptable schedule of Shop Drawings and Sample submittals. All submittals will be identified as ENGINEER may require and in the number of copies specified in the General Requirements. The data shown on the Shop Drawings will be complete with respect to quantities, dimensions, specified performance and design criteria, materials, and similar data to show ENGINEER the services, materials, and equipment CONTRACTOR proposes to provide and to enable ENGINEER to review the information for the limited purposes required by paragraph 6.17.E.

B. CONTRACTOR shall also submit Samples to ENGINEER for review and approval in accordance with the acceptable schedule of Shop Drawings and Sample submittals. Each Sample will be identified clearly as to material, Supplier, pertinent data such as catalog numbers, and the use for which intended and otherwise as ENGINEER may require to enable ENGINEER to review the submittal for the limited purposes required by paragraph 6.17.E. The numbers of each Sample to be submitted will be as specified in the Specifications.

C. Where a Shop Drawing or Sample is required by the Contract Documents or the schedule of Shop Drawings and Sample submittals acceptable to ENGINEER as required by paragraph 2.07, any related Work performed prior to ENGINEER's review and approval of the pertinent submittal will be at the sole expense and responsibility of CONTRACTOR.

D. *Submittal Procedures*

1. Before submitting each Shop Drawing or Sample, CONTRACTOR shall have determined and verified:

a. all field measurements, quantities, dimensions, specified performance criteria, installation requirements, materials, catalog numbers, and similar information with respect thereto;

b. all materials with respect to intended use, fabrication, shipping, handling, storage, assembly, and installation pertaining to the performance of the Work;

c. all information relative to means, methods, techniques, sequences, and procedures of construction and safety precautions and programs incident thereto; and

d. CONTRACTOR shall also have reviewed and coordinated each Shop Drawing or Sample with other Shop Drawings and Samples and with the requirements of the Work and the Contract Documents.

2. Each submittal shall bear a stamp or specific written indication that CONTRACTOR has satisfied CONTRACTOR's obligations under the Contract Documents with respect to CONTRACTOR's review and approval of that submittal.

3. At the time of each submittal, CONTRACTOR shall give ENGINEER specific written notice of such variations, if any, that the Shop Drawing or Sample submitted may have from the requirements of the Contract Documents, such notice to be in a written communication separate from the submittal; and, in addition, shall cause a specific notation to be made on each Shop Drawing and Sample submitted to ENGINEER for review and approval of each such variation.

E. *ENGINEER's Review*

* 1. ENGINEER will ~~timely~~ review and approve Shop Drawings and Samples in accordance with the schedule of Shop Drawings and Sample submittals acceptable to ENGINEER. ENGINEER's review and approval will be only to determine if the items covered by the submittals will, after installation or incorporation in the Work, conform to the information given in the Contract Documents and be compatible with the design concept of the completed Project as a functioning whole as indicated by the Contract Documents.

2. ENGINEER's review and approval will not extend to means, methods, techniques, sequences, or procedures of construction (except where a particular means, method, technique, sequence, or procedure of construction is specifically and expressly called for by the Contract Documents) or to safety precautions or programs incident thereto. The review and approval of a separate item as such will not indicate approval of the assembly in which the item functions.

3. ENGINEER's review and approval of Shop Drawings or Samples shall not relieve CONTRACTOR from responsibility for any variation from the requirements of the Contract Documents unless CONTRACTOR has in writing called ENGINEER's attention to each such variation at the time of each submittal as required by paragraph 6.17.D.3 and ENGINEER has given written approval of each such variation by specific written notation thereof incorporated in or accompanying the Shop Drawing or Sample approval; nor will any approval by ENGINEER relieve CONTRACTOR from responsibility for complying with the requirements of paragraph 6.17.D.1.

F. *Resubmittal Procedures*

1. CONTRACTOR shall make corrections required by ENGINEER and shall return the required number of corrected copies of Shop Drawings and submit as required new Samples for review and approval. CONTRACTOR shall direct specific attention in writing to revisions other than the corrections called for by ENGINEER on previous submittals.

6.18 Continuing the Work

A. CONTRACTOR shall carry on the Work and adhere to the progress schedule during all disputes or disagreements with OWNER. No Work shall be delayed or postponed pending resolution of any disputes or disagreements, except as permitted by paragraph 15.04 or as OWNER and CONTRACTOR may otherwise agree in writing.

6.19 CONTRACTOR's General Warranty and Guarantee

A. CONTRACTOR warrants and guarantees to OWNER, ENGINEER, and ENGINEER's Consultants that all Work will be in accordance with the Contract Documents and will not be defective. CONTRACTOR's warranty and guarantee hereunder excludes defects or damage caused by:

1. abuse, modification, or improper maintenance or operation by persons other than CONTRACTOR, Subcontractors, Suppliers, or any other individual or entity for whom CONTRACTOR is responsible; or

2. normal wear and tear under normal usage.

B. CONTRACTOR's obligation to perform and complete the Work in accordance with the Contract Documents shall be absolute. None of the following will constitute an acceptance of Work that is not in accordance with the Contract Documents or a release of CONTRACTOR's obligation to perform the Work in accordance with the Contract Documents:

1. observations by ENGINEER;

2. recommendation by ENGINEER or payment by OWNER of any progress or final payment;

3. the issuance of a certificate of Substantial Completion by ENGINEER or any payment related thereto by OWNER;

4. use or occupancy of the Work or any part thereof by OWNER;

5. any acceptance by OWNER or any failure to do so;

6. any review and approval of a Shop Drawing or Sample submittal or the issuance of a notice of acceptability by ENGINEER;

7. any inspection, test, or approval by others; or

8. any correction of defective Work by OWNER.

6.20 Indemnification

* ~~A. To the fullest extent permitted by Laws and Regulations, CONTRACTOR shall indemnify and hold harmless OWNER, ENGINEER, ENGINEER's Consultants, and the officers, directors, partners, employees, agents, and other consultants and subcontractors of each and any of them from and against all claims, costs, losses, and damages (including but not limited to all fees and charges of engineers, architects, attorneys, and other professionals and all court or arbitration or other dispute resolution costs) arising out of or relating to the performance of the Work, provided that any such claim, cost, loss, or damage:~~

~~1. is attributable to bodily injury, sickness, disease, or death, or to injury to or destruction of tangible property (other than the Work itself), including the loss of use resulting therefrom; and~~

~~2. is caused in whole or in part by any negligent act or omission of CONTRACTOR, any Subcontractor, any Supplier, or any individual or entity directly or indirectly employed by any of them to perform any of the Work or anyone for whose acts any of them may be liable, regardless of whether or not caused in part by any negligence or omission of an individual or entity indemnified hereunder or whether liability is imposed upon such indemnified party by Laws and Regulations regardless of the negligence of any such individual or entity.~~

B. In any and all claims against OWNER or ENGINEER or any of their respective consultants, agents, officers, directors, partners, or employees by any employee (or the survivor or personal representative of such employee) of CONTRACTOR, any Subcontractor, any Supplier, or any individual or entity directly or indirectly employed by any of them to perform any of the Work, or anyone for whose acts any of them may be liable, the indemnification obligation under paragraph 6.20.A shall not be limited in any way by any limitation on the amount or type of damages, compensation, or benefits payable by or for CONTRACTOR or any such Subcontractor, Supplier, or other individual or entity under workers' compensation acts, disability benefit acts, or other employee benefit acts.

* ~~C. The indemnification obligations of CONTRACTOR under paragraph 6.20.A shall not extend to the liability of ENGINEER and ENGINEER's Consultants or to the officers, directors, partners, employees, agents, and other consultants and subcontractors of each and any of them arising out of:~~

~~1. the preparation or approval of, or the failure to prepare or approve, maps, Drawings, opinions, reports, surveys, Change Orders, designs, or Specifications; or~~

~~2. giving directions or instructions, or failing to give them, if that is the primary cause of the injury or damage.~~

ARTICLE 7 - OTHER WORK

7.01 Related Work at Site

A. OWNER may perform other work related to the Project at the Site by OWNER's employees, or let other direct contracts therefor, or have other work performed by utility owners. If such other work is not noted in the Contract Documents, then:

1. written notice thereof will be given to CONTRACTOR prior to starting any such other work; and

2. if OWNER and CONTRACTOR are unable to agree on entitlement to or on the amount or extent, if any, of any adjustment in the Contract Price or Contract Times that should be allowed as a result of such other work, a Claim may be made therefor as provided in paragraph 10.05.

B. CONTRACTOR shall afford each other contractor who is a party to such a direct contract and each utility owner (and OWNER, if OWNER is performing the other work with OWNER's employees) proper and safe access to the Site and a reasonable opportunity for the introduction and storage of materials and equipment and the execution of such other work and shall properly coordinate the Work with theirs. Unless otherwise provided in the Contract Documents, CONTRACTOR shall do all cutting, fitting, and patching of the Work that may be required to properly connect or otherwise make its several parts come together and properly integrate with such other work. CONTRACTOR shall not endanger any work of others by cutting, excavating, or otherwise altering their work and will only cut or alter their work with the written consent of ENGINEER and the others whose work will be affected. The duties and responsibilities of CONTRACTOR under

this paragraph are for the benefit of such utility owners and other contractors to the extent that there are comparable provisions for the benefit of CONTRACTOR in said direct contracts between OWNER and such utility owners and other contractors.

C. If the proper execution or results of any part of CONTRACTOR's Work depends upon work performed by others under this Article 7, CONTRACTOR shall inspect such other work and promptly report to ENGINEER in writing any delays, defects, or deficiencies in such other work that render it unavailable or unsuitable for the proper execution and results of CONTRACTOR's Work. CONTRACTOR's failure to so report will constitute an acceptance of such other work as fit and proper for integration with CONTRACTOR's Work except for latent defects and deficiencies in such other work.

7.02 Coordination

A. If OWNER intends to contract with others for the performance of other work on the Project at the Site, the following will be set forth in Supplementary Conditions:

1. the individual or entity who will have authority and responsibility for coordination of the activities among the various contractors will be identified;

2. the specific matters to be covered by such authority and responsibility will be itemized; and

3. the extent of such authority and responsibilities will be provided.

B. Unless otherwise provided in the Supplementary Conditions, OWNER shall have sole authority and responsibility for such coordination.

ARTICLE 8 - OWNER'S RESPONSIBILITIES

8.01 Communications to Contractor

A. Except as otherwise provided in these General Conditions, OWNER shall issue all communications to CONTRACTOR through ENGINEER.

8.02 Replacement of ENGINEER

A. In case of termination of the employment of ENGINEER, OWNER shall appoint an engineer to whom CONTRACTOR makes no reasonable objection, whose status under the Contract Documents shall be that of the former ENGINEER.

8.03 Furnish Data

A. OWNER shall promptly furnish the data required of OWNER under the Contract Documents.

8.04 Pay Promptly When Due

A. OWNER shall make payments to CONTRACTOR promptly when they are due as provided in paragraphs 14.02.C and 14.07.C.

8.05 Lands and Easements; Reports and Tests

A. OWNER's duties in respect of providing lands and easements and providing engineering surveys to establish reference points are set forth in paragraphs 4.01 and 4.05. Paragraph 4.02 refers to OWNER's identifying and making available to CONTRACTOR copies of reports of explorations and tests of subsurface conditions and drawings of physical conditions in or relating to existing surface or subsurface structures at or contiguous to the Site that have been utilized by ENGINEER in preparing the Contract Documents.

8.06 Insurance

***** ~~A. OWNER's responsibilities, if any, in respect to purchasing and maintaining liability and property insurance are set forth in Article 5.~~

8.07 Change Orders

A. OWNER is obligated to execute Change Orders as indicated in paragraph 10.03.

8.08 Inspections, Tests, and Approvals

A. OWNER's responsibility in respect to certain inspections, tests, and approvals is set forth in paragraph 13.03.B.

8.09 Limitations on OWNER's Responsibilities

A. The OWNER shall not supervise, direct, or have control or authority over, nor be responsible for, CONTRACTOR's means, methods, techniques, sequences, or procedures of construction, or the safety precautions and programs incident thereto, or for any failure of CONTRACTOR to comply with Laws and Regulations applicable to the performance of the Work. OWNER will not be responsible for CONTRACTOR's failure to perform the Work in accordance with the Contract Documents.

8.10 Undisclosed Hazardous Environmental Condition

A. OWNER's responsibility in respect to an undisclosed Hazardous Environmental Condition is set forth in paragraph 4.06.

8.11 Evidence of Financial Arrangements

A. If and to the extent OWNER has agreed to furnish CONTRACTOR reasonable evidence that financial arrangements have been made to satisfy OWNER's obligations under the Contract Documents, OWNER's

responsibility in respect thereof will be as set forth in the Supplementary Conditions.

ARTICLE 9 - ENGINEER'S STATUS DURING CONSTRUCTION

9.01 OWNER'S Representative

A. ENGINEER will be OWNER's representative during the construction period. The duties and responsibilities and the limitations of authority of ENGINEER as OWNER's representative during construction are set forth in the Contract Documents and will not be changed without written consent of OWNER and ENGINEER.

*****

9.02 Visits to Site

A. ENGINEER will make visits to the Site at intervals appropriate to the various stages of construction as ENGINEER deems necessary in order to observe as an experienced and qualified design professional the progress that has been made and the quality of the various aspects of CONTRACTOR's executed Work. Based on information obtained during such visits and observations, ENGINEER, for the benefit of OWNER, will determine, in general, if the Work is proceeding in accordance with the Contract Documents. ENGINEER will not be required to make exhaustive or continuous inspections on the Site to check the quality or quantity of the Work. ENGINEER's efforts will be directed toward providing for OWNER a greater degree of confidence that the completed Work will conform generally to the Contract Documents. On the basis of such visits and observations, ENGINEER will keep OWNER informed of the progress of the Work and will endeavor to guard OWNER against defective Work.

B. ENGINEER's visits and observations are subject to all the limitations on ENGINEER's authority and responsibility set forth in paragraph 9.10, and particularly, but without limitation, during or as a result of ENGINEER's visits or observations of CONTRACTOR's Work ENGINEER will not supervise, direct, control, or have authority over or be responsible for CONTRACTOR's means, methods, techniques, sequences, or procedures of construction, or the safety precautions and programs incident thereto, or for any failure of CONTRACTOR to comply with Laws and Regulations applicable to the performance of the Work.

9.03 Project Representative

A. If OWNER and ENGINEER agree, ENGINEER will furnish a Resident Project Representative to assist ENGINEER in providing more extensive observation of the Work. The responsibilities and authority and limitations thereon of any such Resident Project Representative and assistants will be as provided in paragraph 9.10 and in the Supplementary Conditions. If OWNER designates another representative or agent to represent OWNER at the Site who is not ENGINEER's Consultant, agent or employee, the responsibilities and authority and limitations thereon of such other individual or entity will be as provided in the Supplementary Conditions.

9.04 Clarifications and Interpretations

A. ENGINEER will issue with reasonable promptness such written clarifications or interpretations of the requirements of the Contract Documents as ENGINEER may determine necessary, which shall be consistent with the intent of and reasonably inferable from the Contract Documents. Such written clarifications and interpretations will be binding on OWNER and CONTRACTOR. If OWNER and CONTRACTOR are unable to agree on entitlement to or on the amount or extent, if any, of any adjustment in the Contract Price or Contract Times, or both, that should be allowed as a result of a written clarification or interpretation, a Claim may be made therefor as provided in paragraph 10.05.

******

9.05 Authorized Variations in Work

A. ENGINEER may authorize minor variations in the Work from the requirements of the Contract Documents which do not involve an adjustment in the Contract Price or the Contract Times and are compatible with the design concept of the completed Project as a functioning whole as indicated by the Contract Documents. These may be accomplished by a Field Order and will be binding on OWNER and also on CONTRACTOR, who shall perform the Work involved promptly. If OWNER and CONTRACTOR are unable to agree on entitlement to or on the amount or extent, if any, of any adjustment in the Contract Price or Contract Times, or both, as a result of a Field Order, a Claim may be made therefor as provided in paragraph 10.05.

9.06 Rejecting Defective Work

A. ENGINEER will have authority to disapprove or reject Work which ENGINEER believes to be defective, or that ENGINEER believes will not produce a completed Project that conforms to the Contract Documents or that will prejudice the integrity of the design concept of the completed Project as a functioning whole as indicated by the Contract Documents. ENGINEER will also have authority to require special inspection or testing of the Work as provided in paragraph 13.04, whether or not the Work is fabricated, installed, or completed.

9.07 Shop Drawings, Change Orders and Payments

A. In connection with ENGINEER's authority as to Shop Drawings and Samples, see paragraph 6.17.

B. In connection with ENGINEER's authority as to Change Orders, see Articles 10, 11, and 12.

C. In connection with ENGINEER's authority as to Applications for Payment, see Article 14.

9.08 Determinations for Unit Price Work

A. ENGINEER will determine the actual quantities and classifications of Unit Price Work performed by CONTRACTOR. ENGINEER will review with CONTRACTOR the ENGINEER's preliminary determinations on such matters before rendering a written decision thereon (by recommendation of an Application for Payment or otherwise). ENGINEER's written decision thereon will be final and binding (except as modified by ENGINEER to reflect changed factual conditions or more accurate data) upon OWNER and CONTRACTOR, subject to the provisions of paragraph 10.05.

9.09 Decisions on Requirements of Contract Documents and Acceptability of Work

A. ENGINEER will be the initial interpreter of the requirements of the Contract Documents and judge of the acceptability of the Work thereunder. Claims, disputes and other matters relating to the acceptability of the Work, the quantities and classifications of Unit Price Work, the interpretation of the requirements of the Contract Documents pertaining to the performance of the Work, and Claims seeking changes in the Contract Price or Contract Times will be referred initially to ENGINEER in writing, in accordance with the provisions of paragraph 10.05, with a request for a formal decision.

B. When functioning as interpreter and judge under this paragraph 9.09, ENGINEER will not show partiality to OWNER or CONTRACTOR and will not be liable in connection with any interpretation or decision rendered in good faith in such capacity. The rendering of a decision by ENGINEER pursuant to this paragraph 9.09 with respect to any such Claim, dispute, or other matter (except any which have been waived by the making or acceptance of final payment as provided in paragraph 14.07) will be a condition precedent to any exercise by OWNER or CONTRACTOR of such rights or remedies as either may otherwise have under the Contract Documents or by Laws or Regulations in respect of any such Claim, dispute, or other matter.

9.10 Limitations on ENGINEER's Authority and Responsibilities

A. Neither ENGINEER's authority or responsibility under this Article 9 or under any other provision of the Contract Documents nor any decision made by ENGINEER in good faith either to exercise or not exercise such authority or responsibility or the undertaking, exercise, or performance of any authority or responsibility by ENGINEER shall create, impose, or give rise to any duty in contract, tort, or otherwise owed by ENGINEER to CONTRACTOR, any Subcontractor, any Supplier, any other individual or entity, or to any surety for or employee or agent of any of them.

B. ENGINEER will not supervise, direct, control, or have authority over or be responsible for CONTRACTOR's means, methods, techniques, sequences, or procedures of construction, or the safety precautions and programs incident thereto, or for any failure of CONTRACTOR to comply with Laws and Regulations applicable to the performance of the Work. ENGINEER will not be responsible for CONTRACTOR's failure to perform the Work in accordance with the Contract Documents.

C. ENGINEER will not be responsible for the acts or omissions of CONTRACTOR or of any Subcontractor, any Supplier, or of any other individual or entity performing any of the Work.

D. ENGINEER's review of the final Application for Payment and accompanying documentation and all maintenance and operating instructions, schedules, guarantees, Bonds, certificates of inspection, tests and approvals, and other documentation required to be delivered by paragraph 14.07.A will only be to determine generally that their content complies with the requirements of, and in the case of certificates of inspections, tests, and approvals that the results certified indicate compliance with, the Contract Documents.

E. The limitations upon authority and responsibility set forth in this paragraph 9.10 shall also apply to ENGINEER's Consultants, Resident Project Representative, and assistants.

ARTICLE 10 - CHANGES IN THE WORK; CLAIMS

10.01 Authorized Changes in the Work

A. Without invalidating the Agreement and without notice to any surety, OWNER may, at any time or from time to time, order additions, deletions, or revisions in the Work by a Written Amendment, a Change Order, or a Work Change Directive. Upon receipt of any such document, CONTRACTOR shall promptly proceed with the Work involved which will be performed under the applicable conditions of the Contract Documents (except as otherwise specifically provided).

B. If OWNER and CONTRACTOR are unable to agree on entitlement to, or on the amount or extent, if any, of an adjustment in the Contract Price or Contract Times, or both, that should be allowed as a result of a Work Change Directive, a Claim may be made therefor as provided in paragraph 10.05.

10.02 Unauthorized Changes in the Work

A. CONTRACTOR shall not be entitled to an increase in the Contract Price or an extension of the Contract Times with respect to any work performed that is not required by the Contract Documents as amended, modified, or supplemented as provided in paragraph 3.04, except in the case of an emergency as provided in paragraph 6.16 or in the case of uncovering Work as provided in paragraph 13.04.B.

10.03 Execution of Change Orders

A. OWNER and CONTRACTOR shall execute appropriate Change Orders recommended by ENGINEER (or Written Amendments) covering:

1. changes in the Work which are: (i) ordered by OWNER pursuant to paragraph 10.01.A, (ii) required because of acceptance of defective Work under paragraph 13.08.A or OWNER's correction of defective Work under paragraph 13.09, or (iii) agreed to by the parties;

2. changes in the Contract Price or Contract Times which are agreed to by the parties, including any undisputed sum or amount of time for Work actually performed in accordance with a Work Change Directive; and

3. changes in the Contract Price or Contract Times which embody the substance of any written decision rendered by ENGINEER pursuant to paragraph 10.05; provided that, in lieu of executing any such Change Order, an appeal may be taken from any such decision in accordance with the provisions of the Contract Documents and applicable Laws and Regulations, but during any such appeal, CONTRACTOR shall carry on the Work and adhere to the progress schedule as provided in paragraph 6.18.A.

10.04 Notification to Surety

A. If notice of any change affecting the general scope of the Work or the provisions of the Contract Documents (including, but not limited to, Contract Price or Contract Times) is required by the provisions of any Bond to be given to a surety, the giving of any such notice will be CONTRACTOR's responsibility. The amount of each applicable Bond will be adjusted to reflect the effect of any such change.

10.05 Claims and Disputes

A. *Notice:* Written notice stating the general nature of each Claim, dispute, or other matter shall be delivered by the claimant to ENGINEER and the other party to the Contract promptly (but in no event later than 30 days) after the start of the event giving rise thereto. Notice of the amount or extent of the Claim, dispute, or other matter with supporting data shall be delivered to the ENGINEER and the other party to the Contract within 60 days after the start of such event (unless ENGINEER allows additional time for claimant to submit additional or more accurate data in support of such Claim, dispute, or other matter). A Claim for an adjustment in Contract Price shall be prepared in accordance with the provisions of paragraph 12.01.B. A Claim for an adjustment in Contract Time shall be prepared in accordance with the provisions of paragraph 12.02.B. Each Claim shall be accompanied by claimant's written statement that the adjustment claimed is the entire adjustment to which the claimant believes it is entitled as a result of said event. The opposing party shall submit any response to ENGINEER and the claimant within 30 days after receipt of the claimant's last submittal (unless ENGINEER allows additional time).

B. *ENGINEER's Decision:* ENGINEER will render a formal decision in writing within 30 days after receipt of the last submittal of the claimant or the last submittal of the opposing party, if any. ENGINEER's written decision on such Claim, dispute, or other matter will be final and binding upon OWNER and CONTRACTOR unless:

1. an appeal from ENGINEER's decision is taken within the time limits and in accordance with the dispute resolution procedures set forth in Article 16; or

2. if no such dispute resolution procedures have been set forth in Article 16, a written notice of intention to appeal from ENGINEER's written decision is delivered by OWNER or CONTRACTOR to the other and to ENGINEER within 30 days after the date of such decision, and a formal proceeding is instituted by the appealing party in a forum of competent jurisdiction within 60 days after the date of such decision or within 60 days after Substantial Completion, whichever is later (unless otherwise agreed in writing by OWNER and CONTRACTOR), to exercise such rights or remedies as the appealing party may have with respect to such Claim, dispute, or other matter in accordance with applicable Laws and Regulations.

C. If ENGINEER does not render a formal decision in writing within the time stated in paragraph 10.05.B, a decision denying the Claim in its entirety shall be deemed to have been issued 31 days after receipt of the last submittal of the claimant or the last submittal of the opposing party, if any.

D. No Claim for an adjustment in Contract Price or Contract Times (or Milestones) will be valid if not submitted in accordance with this paragraph 10.05.

ARTICLE 11 - COST OF THE WORK; CASH ALLOWANCES; UNIT PRICE WORK

**

11.01 Cost of the Work

~~A. *Costs Included:* The term Cost of the Work means the sum of all costs necessarily incurred and paid by CONTRACTOR in the proper performance of the Work. When the value of any Work covered by a Change Order or when a Claim for an adjustment in Contract Price is determined on the basis of Cost of the Work, the costs to be reimbursed to CONTRACTOR will be only those additional or incremental costs required because of the change in the Work or because of the event giving rise to the Claim. Except as otherwise may be agreed to in writing by OWNER, such costs shall be in amounts no higher than those prevailing in the locality of the Project, shall include only the following items, and shall not include any of the costs itemized in paragraph 11.01.B.~~

~~1. Payroll costs for employees in the direct employ of CONTRACTOR in the performance of the Work under schedules of job classifications agreed upon by OWNER and CONTRACTOR. Such employees shall include without limitation superintendents, foremen, and other personnel employed full time at the Site. Payroll costs for employees not employed full time on the Work shall be apportioned on the basis of their time spent on the Work. Payroll costs shall include, but not be limited to, salaries and wages plus the cost of fringe benefits, which shall include social security contributions, unemployment, excise, and payroll taxes, workers' compensation, health and retirement benefits, bonuses, sick leave, vacation and holiday pay applicable thereto. The expenses of performing Work outside of regular working hours, on Saturday, Sunday, or legal holidays, shall be included in the above to the extent authorized by OWNER.~~

~~2. Cost of all materials and equipment furnished and incorporated in the Work, including costs of transportation and storage thereof, and Suppliers' field services required in connection therewith. All cash discounts shall accrue to CONTRACTOR unless OWNER deposits funds with CONTRACTOR with which to make payments, in which case the cash discounts shall accrue to OWNER. All trade discounts, rebates and refunds and returns from sale of surplus materials and equipment shall accrue to OWNER, and CONTRACTOR shall make provisions so that they may be obtained.~~

~~3. Payments made by CONTRACTOR to Subcontractors for Work performed by Subcontractors. If required by OWNER, CONTRACTOR shall obtain competitive bids from subcontractors acceptable to OWNER and CONTRACTOR and shall deliver such bids to OWNER, who will then determine, with the advice of ENGINEER, which bids, if any, will be acceptable. If any subcontract provides that the Subcontractor is to be paid on the basis of Cost of the Work plus a fee, the Subcontractor's Cost of the Work and fee shall be determined in the same manner as CONTRACTOR's Cost of the Work and fee as provided in this paragraph 11.01.~~

~~4. Costs of special consultants (including but not limited to engineers, architects, testing laboratories, surveyors, attorneys, and accountants) employed for services specifically related to the Work.~~

~~5. Supplemental costs including the following:~~

~~a. The proportion of necessary transportation, travel, and subsistence expenses of CONTRACTOR's employees incurred in discharge of duties connected with the Work.~~

~~b. Cost, including transportation and maintenance, of all materials, supplies, equipment, machinery, appliances, office, and temporary facilities at the Site, and hand tools not owned by the workers, which are consumed in the performance of the Work, and cost, less market value, of such items used but not consumed which remain the property of CONTRACTOR.~~

~~c. Rentals of all construction equipment and machinery, and the parts thereof whether rented from CONTRACTOR or others in accordance with rental agreements approved by OWNER with the advice of ENGINEER, and the costs of transportation, loading, unloading, assembly, dismantling, and removal thereof. All such costs shall be in accordance with the terms of said rental agreements. The rental of any such equipment, machinery, or parts shall cease when the use thereof is no longer necessary for the Work.~~

~~d. Sales, consumer, use, and other similar taxes related to the Work, and for which CONTRACTOR is liable, imposed by Laws and Regulations.~~

~~e. Deposits lost for causes other than negligence of CONTRACTOR, any Subcontractor, or anyone directly or indirectly employed by any of them or for whose acts any of them may be liable, and royalty payments and fees for permits and licenses.~~

~~f. Losses and damages (and related expenses) caused by damage to the Work, not compensated by insurance or otherwise, sustained by CONTRACTOR in connection with the perfor-~~

~~mance of the Work (except losses and damages within the deductible amounts of property insurance established in accordance with paragraph 5.06.D), provided such losses and damages have resulted from causes other than the negligence of CONTRACTOR, any Subcontractor, or anyone directly or indirectly employed by any of them or for whose acts any of them may be liable. Such losses shall include settlements made with the written consent and approval of OWNER. No such losses, damages, and expenses shall be included in the Cost of the Work for the purpose of determining CONTRACTOR's fee.~~

~~g. The cost of utilities, fuel, and sanitary facilities at the Site.~~

~~h. Minor expenses such as telegrams, long distance telephone calls, telephone service at the Site, expressage, and similar petty cash items in connection with the Work.~~

~~i. When the Cost of the Work is used to determine the value of a Change Order or of a Claim, the cost of premiums for additional Bonds and insurance required because of the changes in the Work or caused by the event giving rise to the Claim.~~

~~j. When all the Work is performed on the basis of cost-plus, the costs of premiums for all Bonds and insurance CONTRACTOR is required by the Contract Documents to purchase and maintain.~~

~~B. *Costs Excluded:* The term Cost of the Work shall not include any of the following items:~~

~~1. Payroll costs and other compensation of CONTRACTOR's officers, executives, principals (of partnerships and sole proprietorships), general managers, engineers, architects, estimators, attorneys, auditors, accountants, purchasing and contracting agents, expediters, timekeepers, clerks, and other personnel employed by CONTRACTOR, whether at the Site or in CONTRACTOR's principal or branch office for general administration of the Work and not specifically included in the agreed upon schedule of job classifications referred to in paragraph 11.01.A.1 or specifically covered by paragraph 11.01.A.4, all of which are to be considered administrative costs covered by the CONTRACTOR's fee.~~

~~2. Expenses of CONTRACTOR's principal and branch offices other than CONTRACTOR's office at the Site.~~

~~3. Any part of CONTRACTOR's capital expenses, including interest on CONTRACTOR's capital employed for the Work and charges against CONTRACTOR for delinquent payments.~~

~~4. Costs due to the negligence of CONTRACTOR, any Subcontractor, or anyone directly or indirectly employed by any of them or for whose acts any of them may be liable, including but not limited to, the correction of defective Work, disposal of materials or equipment wrongly supplied, and making good any damage to property.~~

~~5. Other overhead or general expense costs of any kind and the costs of any item not specifically and expressly included in paragraphs 11.01.A and 11.01.B.~~

~~C. *CONTRACTOR's Fee:* When all the Work is performed on the basis of cost-plus, CONTRACTOR's fee shall be determined as set forth in the Agreement. When the value of any Work covered by a Change Order or when a Claim for an adjustment in Contract Price is determined on the basis of Cost of the Work, CONTRACTOR's fee shall be determined as set forth in paragraph 12.01.C.~~

~~D. *Documentation:* Whenever the Cost of the Work for any purpose is to be determined pursuant to paragraphs 11.01.A and 11.01.B, CONTRACTOR will establish and maintain records thereof in accordance with generally accepted accounting practices and submit in a form acceptable to ENGINEER an itemized cost breakdown together with supporting data.~~

~~*11.02* Cash Allowances~~

~~A. It is understood that CONTRACTOR has included in the Contract Price all allowances so named in the Contract Documents and shall cause the Work so covered to be performed for such sums as may be acceptable to OWNER and ENGINEER. CONTRACTOR agrees that:~~

~~1. the allowances include the cost to CONTRACTOR (less any applicable trade discounts) of materials and equipment required by the allowances to be delivered at the Site, and all applicable taxes; and~~

~~2. CONTRACTOR's costs for unloading and handling on the Site, labor, installation costs, overhead, profit, and other expenses contemplated for the allowances have been included in the Contract Price and not in the allowances, and no demand for additional payment on account of any of the foregoing will be valid.~~

~~B. Prior to final payment, an appropriate Change Order will be issued as recommended by ENGINEER to reflect actual amounts due CONTRACTOR on account of Work covered by allowances, and the Contract Price shall be correspondingly adjusted.~~

~~*11.03* Unit Price Work~~

~~A. Where the Contract Documents provide that all or part of the Work is to be Unit Price Work, initially the Contract Price will be deemed to include for all Unit Price~~

~~Work an amount equal to the sum of the unit price for each separately identified item of Unit Price Work times the estimated quantity of each item as indicated in the Agreement. The estimated quantities of items of Unit Price Work are not guaranteed and are solely for the purpose of comparison of Bids and determining an initial Contract Price. Determinations of the actual quantities and classifications of Unit Price Work performed by CONTRACTOR will be made by ENGINEER subject to the provisions of paragraph 9.08.~~

~~B. Each unit price will be deemed to include an amount considered by CONTRACTOR to be adequate to cover CONTRACTOR's overhead and profit for each separately identified item.~~

*****

~~C. OWNER or CONTRACTOR may make a Claim for an adjustment in the Contract Price in accordance with paragraph 10.05 if:~~

~~1. the quantity of any item of Unit Price Work performed by CONTRACTOR differs materially and significantly from the estimated quantity of such item indicated in the Agreement; and~~

~~2. there is no corresponding adjustment with respect any other item of Work; and~~

~~3. if CONTRACTOR believes that CONTRACTOR is entitled to an increase in Contract Price as a result of having incurred additional expense or OWNER believes that OWNER is entitled to a decrease in Contract Price and the parties are unable to agree as to the amount of any such increase or decrease.~~

ARTICLE 12 - CHANGE OF CONTRACT PRICE; CHANGE OF CONTRACT TIMES

12.01 Change of Contract Price

******

~~A. The Contract Price may only be changed by a Change Order or by a Written Amendment. Any Claim for an adjustment in the Contract Price shall be based on written notice submitted by the party making the Claim to the ENGINEER and the other party to the Contract in accordance with the provisions of paragraph 10.05.~~

~~B. The value of any Work covered by a Change Order or of any Claim for an adjustment in the Contract Price will be determined as follows:~~

~~1. where the Work involved is covered by unit prices contained in the Contract Documents, by application of such unit prices to the quantities of the items involved (subject to the provisions of paragraph 11.03); or~~

~~2. where the Work involved is not covered by unit prices contained in the Contract Documents, by a mutually agreed lump sum (which may include an allowance for overhead and profit not necessarily in accordance with paragraph 12.01.C.2); or~~

~~3. where the Work involved is not covered by unit prices contained in the Contract Documents and agreement to a lump sum is not reached under paragraph 12.01.B.2, on the basis of the Cost of the Work (determined as provided in paragraph 11.01) plus a CONTRACTOR's fee for overhead and profit (determined as provided in paragraph 12.01.C).~~

~~C. *CONTRACTOR's Fee:* The CONTRACTOR's fee for overhead and profit shall be determined as follows:~~

~~1.a mutually acceptable fixed fee; or~~

~~2. if a fixed fee is not agreed upon, then a fee based on the following percentages of the various portions of the Cost of the Work:~~

a. for costs incurred under paragraphs 11.~~01.A.1 and 11.01.A.2, the CONTRACTOR's fee shall be 15 percent;~~

~~b. for costs incurred under paragraph 11.01.A.3, the CONTRACTOR's fee shall be five percent;~~

~~c. where one or more tiers of subcontracts are on the basis of Cost of the Work plus a fee and no fixed fee is agreed upon, the intent of paragraph 12.01.C.2.a is that the Subcontractor who actually performs the Work, at whatever tier, will be paid a fee of 15 percent of the costs incurred by such Subcontractor under paragraphs 11.01.A.1 and 11.01.A.2 and that any higher tier Subcontractor and CONTRACTOR will each be paid a fee of five percent of the amount paid to the next lower tier Subcontractor;~~

~~d. no fee shall be payable on the basis of costs itemized under paragraphs 11.01.A.4, 11.01.A.5, and 11.01.B;~~

~~e. the amount of credit to be allowed by CONTRACTOR to OWNER for any change which results in a net decrease in cost will be the amount of the actual net decrease in cost plus a deduction in CONTRACTOR's fee by an amount equal to five percent of such net decrease; and~~

~~f. when both additions and credits are involved in any one change, the adjustment in CONTRACTOR's fee shall be computed on the basis of the net change in accordance with paragraphs 12.01.C.2.a through 12.01.C.2.e, inclusive.~~

12.02 Change of Contract Times

A. The Contract Times (or Milestones) may only be changed by a Change Order or by a Written Amendment. Any Claim for an adjustment in the Contract Times (or Milestones) shall be based on written notice submitted by the party making the claim to the ENGINEER and the other party to the Contract in accordance with the provisions of paragraph 10.05.

B. Any adjustment of the Contract Times (or Milestones) covered by a Change Order or of any Claim for an adjustment in the Contract Times (or Milestones) will be determined in accordance with the provisions of this* Article 12.

12.03 Delays Beyond CONTRACTOR's Control

A. Where CONTRACTOR is prevented from completing any part of the Work within the Contract Times (or Milestones) due to delay beyond the control of CONTRACTOR, the Contract Times (or Milestones) will be extended in an amount equal to the time lost due to such delay if a Claim is made therefor as provided in paragraph 12.02.A. Delays beyond the control of CONTRACTOR shall include, but not be limited to, acts or neglect by OWNER, acts or neglect of utility owners or other contractors performing other work as contemplated by Article 7, fires, floods, epidemics, abnormal weather conditions, or acts of God.

12.04 Delays Within CONTRACTOR's Control

A. The Contract Times (or Milestones) will not be extended due to delays within the control of CONTRACTOR. Delays attributable to and within the control of a Subcontractor or Supplier shall be deemed to be delays within the control of CONTRACTOR.

12.05 Delays Beyond OWNER's and CONTRACTOR's Control

A. Where CONTRACTOR is prevented from completing any part of the Work within the Contract Times (or Milestones) due to delay beyond the control of both OWNER and CONTRACTOR, an extension of the Contract Times (or Milestones) in an amount equal to the time lost due to such delay shall be CONTRACTOR's sole and exclusive remedy for such delay.

12.06 Delay Damages

A. In no event shall OWNER or ENGINEER be liable to CONTRACTOR, any Subcontractor, any Supplier, or any other person or organization, or to any surety for or employee or agent of any of them, for damages arising out of or resulting from:

1. delays caused by or within the control of CONTRACTOR; or

2. delays beyond the control of both OWNER and CONTRACTOR including but not limited to fires, floods, epidemics, abnormal weather conditions, acts of God, or acts or neglect by utility owners or other contractors performing other work as contemplated by Article 7.

B. Nothing in this paragraph 12.06 bars a change in Contract Price pursuant to this Article 12 to compensate CONTRACTOR due to delay, interference, or disruption directly attributable to actions or inactions of OWNER or anyone for whom OWNER is responsible.

ARTICLE 13 - TESTS AND INSPECTIONS; CORRECTION, REMOVAL OR ACCEPTANCE OF DEFECTIVE WORK

13.01 Notice of Defects

A. Prompt notice of all defective Work of which OWNER or ENGINEER has actual knowledge will be given to CONTRACTOR. All defective Work may be rejected, corrected, or accepted as provided in this Article 13.

13.02 Access to Work

A. OWNER, ENGINEER, ENGINEER's Consultants, other representatives and personnel of OWNER, independent testing laboratories, and governmental agencies with jurisdictional interests will have access to the Site and the Work at reasonable times for their observation, inspecting, and testing. CONTRACTOR shall provide them proper and safe conditions for such access and advise them of CONTRACTOR's Site safety procedures and programs so that they may comply therewith as applicable.

13.03 Tests and Inspections

A. CONTRACTOR shall give ENGINEER timely notice of readiness of the Work for all required inspections, tests, or approvals and shall cooperate with inspection and testing personnel to facilitate required inspections or tests.

B. OWNER shall employ and pay for the services of an independent testing laboratory to perform all inspections, tests, or approvals required by the Contract Documents except:

1. for inspections, tests, or approvals covered by paragraphs 13.03.C and 13.03.D below;

2. that costs incurred in connection with tests or inspections conducted pursuant to paragraph 13.04.B shall be paid as provided in said paragraph 13.04.B; and

3. as otherwise specifically provided in the Contract Documents.

C. If Laws or Regulations of any public body having jurisdiction require any Work (or part thereof) specifically to be inspected, tested, or approved by an employee or other

representative of such public body, CONTRACTOR shall assume full responsibility for arranging and obtaining such inspections, tests, or approvals, pay all costs in connection therewith, and furnish ENGINEER the required certificates of inspection or approval.

D. CONTRACTOR shall be responsible for arranging and obtaining and shall pay all costs in connection with any inspections, tests, or approvals required for OWNER's and ENGINEER's acceptance of materials or equipment to be incorporated in the Work; or acceptance of materials, mix designs, or equipment submitted for approval prior to CONTRACTOR's purchase thereof for incorporation in the Work. Such inspections, tests, or approvals shall be performed by organizations acceptable to OWNER and ENGINEER.

E. If any Work (or the work of others) that is to be inspected, tested, or approved is covered by CONTRACTOR without written concurrence of ENGINEER, it must, if requested by ENGINEER, be uncovered for observation.

F. Uncovering Work as provided in paragraph 13.03.E shall be at CONTRACTOR's expense unless CONTRACTOR has given ENGINEER timely notice of CONTRACTOR's intention to cover the same and ENGINEER has not acted with reasonable promptness in response to such notice.

13.04 Uncovering Work

A. If any Work is covered contrary to the written request of ENGINEER, it must, if requested by ENGINEER, be uncovered for ENGINEER's observation and replaced at CONTRACTOR's expense.

B. If ENGINEER considers it necessary or advisable that covered Work be observed by ENGINEER or inspected or tested by others, CONTRACTOR, at ENGINEER's request, shall uncover, expose, or otherwise make available for observation, inspection, or testing as ENGINEER may require, that portion of the Work in question, furnishing all necessary labor, material, and equipment. If it is found that such Work is defective, CONTRACTOR shall pay all Claims, costs, losses, and damages (including but not limited to all fees and charges of engineers, architects, attorneys, and other professionals and all court or arbitration or other dispute resolution costs) arising out of or relating to such uncovering, exposure, observation, inspection, and testing, and of satisfactory replacement or reconstruction (including but not limited to all costs of repair or replacement of work of others); and OWNER shall be entitled to an appropriate decrease in the Contract Price. If the parties are unable to agree as to the amount thereof, OWNER may make a Claim therefor as provided in paragraph 10.05. If, however, such Work is not found to be defective, CONTRACTOR shall be allowed an increase in the Contract Price or an extension of the Contract Times (or Milestones), or both, directly attributable to such uncovering, exposure, observation, inspection, testing, replacement, and reconstruction. If the parties are unable to agree as to the amount or extent thereof, CONTRACTOR may make a Claim therefor as provided in paragraph 10.05.

13.05 OWNER May Stop the Work

A. If the Work is defective, or CONTRACTOR fails to supply sufficient skilled workers or suitable materials or equipment, or fails to perform the Work in such a way that the completed Work will conform to the Contract Documents, OWNER may order CONTRACTOR to stop the Work, or any portion thereof, until the cause for such order has been eliminated; however, this right of OWNER to stop the Work shall not give rise to any duty on the part of OWNER to exercise this right for the benefit of CONTRACTOR, any Subcontractor, any Supplier, any other individual or entity, or any surety for, or employee or agent of any of them.

13.06 Correction or Removal of Defective Work

A. CONTRACTOR shall correct all defective Work, whether or not fabricated, installed, or completed, or, if the Work has been rejected by ENGINEER, remove it from the Project and replace it with Work that is not defective. CONTRACTOR shall pay all Claims, costs, losses, and damages (including but not limited to all fees and charges of engineers, architects, attorneys, and other professionals and all court or arbitration or other dispute resolution costs) arising out of or relating to such correction or removal (including but not limited to all costs of repair or replacement of work of others).

13.07 Correction Period
*****

~~A. If within one year after the date of Substantial Completion or such longer period of time as may be prescribed by Laws or Regulations or by the terms of any applicable special guarantee required by the Contract Documents or by any specific provision of the Contract Documents, any Work is found to be defective, or if the repair of any damages to the land or areas made available for CONTRACTOR's use by OWNER or permitted by Laws and Regulations as contemplated in paragraph 6.11.A is found to be defective, CONTRACTOR shall promptly, without cost to OWNER and in accordance with OWNER's written instructions: (i) repair such defective land or areas, or (ii) correct such defective Work or, if the defective Work has been rejected by OWNER, remove it from the Project and replace it with Work that is not defective, and (iii) satisfactorily correct or repair or remove and replace any damage to other Work, to the work of others or other land or areas resulting therefrom. If CONTRACTOR does not promptly comply with the terms of such instructions, or in an emergency where delay would cause serious risk of loss or damage, OWNER may have the defective Work corrected or repaired or may have the rejected Work removed and replaced, and all Claims, costs, losses, and damages (including but not limited to all fees and charges of engineers, architects, attorneys, and other professionals and all court or arbitration or other dispute resolution costs) arising out of or relating to such correction or repair or such removal and replacement (including but not limited to all~~

~~costs of repair or replacement of work of others) will be paid by CONTRACTOR.~~

B. In special circumstances where a particular item of equipment is placed in continuous service before Substantial Completion of all the Work, the correction period for that item may start to run from an earlier date if so provided in the Specifications or by Written Amendment.

C. Where defective Work (and damage to other Work resulting therefrom) has been corrected or removed and replaced under this paragraph 13.07, the correction period hereunder with respect to such Work will be extended for an additional period of one year after such correction or removal and replacement has been satisfactorily completed.

D. CONTRACTOR's obligations under this paragraph 13.07 are in addition to any other obligation or warranty. The provisions of this paragraph 13.07 shall not be construed as a substitute for or a waiver of the provisions of any applicable statute of limitation or repose.

13.08 Acceptance of Defective Work

A. If, instead of requiring correction or removal and replacement of defective Work, OWNER (and, prior to ENGINEER's recommendation of final payment, ENGINEER) prefers to accept it, OWNER may do so. CONTRACTOR shall pay all Claims, costs, losses, and damages (including but not limited to all fees and charges of engineers, architects, attorneys, and other professionals and all court or arbitration or other dispute resolution costs) attributable to OWNER's evaluation of and determination to accept such defective Work (such costs to be approved by ENGINEER as to reasonableness) and the diminished value of the Work to the extent not otherwise paid by CONTRACTOR pursuant to this sentence. If any such acceptance occurs prior to ENGINEER's recommendation of final payment, a Change Order will be issued incorporating the necessary revisions in the Contract Documents with respect to the Work, and OWNER shall be entitled to an appropriate decrease in the Contract Price, reflecting the diminished value of Work so accepted. If the parties are unable to agree as to the amount thereof, OWNER may make a Claim therefor as provided in paragraph 10.05. If the acceptance occurs after such recommendation, an appropriate amount will be paid by CONTRACTOR to OWNER.

13.09 OWNER May Correct Defective Work

***** A. If CONTRACTOR fails within a reasonable time after written notice from ENGINEER to correct defective Work or to remove and replace rejected Work as required by ENGINEER in accordance with paragraph 13.06.A, or if CONTRACTOR fails to perform the Work in accordance with the Contract Documents, or if CONTRACTOR fails to comply with any other provision of the Contract Documents, OWNER may, after seven days written notice to CONTRACTOR, correct and remedy any such deficiency.

B. In exercising the rights and remedies under this paragraph, OWNER shall proceed expeditiously. In connection with such corrective and remedial action, OWNER may exclude CONTRACTOR from all or part of the Site, take possession of all or part of the Work and suspend CONTRACTOR's services related thereto, take possession of CONTRACTOR's tools, appliances, construction equipment and machinery at the Site, and incorporate in the Work all materials and equipment stored at the Site or for which OWNER has paid CONTRACTOR but which are stored elsewhere. CONTRACTOR shall allow OWNER, OWNER's representatives, agents and employees, OWNER's other contractors, and ENGINEER and ENGINEER's Consultants access to the Site to enable OWNER to exercise the rights and remedies under this paragraph.

C. All Claims, costs, losses, and damages (including but not limited to all fees and charges of engineers, architects, attorneys, and other professionals and all court or arbitration or other dispute resolution costs) incurred or sustained by OWNER in exercising the rights and remedies under this paragraph 13.09 will be charged against CONTRACTOR, and a Change Order will be issued incorporating the necessary revisions in the Contract Documents with respect to the Work; and OWNER shall be entitled to an appropriate decrease in the Contract Price. If the parties are unable to agree as to the amount of the adjustment, OWNER may make a Claim therefor as provided in paragraph 10.05. Such claims, costs, losses and damages will include but not be limited to all costs of repair, or replacement of work of others destroyed or damaged by correction, removal, or replacement of CONTRACTOR's defective Work.

D. CONTRACTOR shall not be allowed an extension of the Contract Times (or Milestones) because of any delay in the performance of the Work attributable to the exercise by OWNER of OWNER's rights and remedies under this paragraph 13.09.

ARTICLE 14 - PAYMENTS TO CONTRACTOR AND COMPLETION

14.01 Schedule of Values

A. The schedule of values established as provided in paragraph 2.07.A will serve as the basis for progress payments and will be incorporated into a form of Application for Payment acceptable to ENGINEER. Progress payments on account of Unit Price Work will be based on the number of units completed.

14.02 Progress Payments

A. *Applications for Payments*

1. At least 20 days before the date established for each progress payment (but not more often than once a month), CONTRACTOR shall submit to ENGINEER for review an Application for Payment filled out and signed by CONTRACTOR covering

the Work completed as of the date of the Application and accompanied by such supporting documentation as is required by the Contract Documents. If payment is requested on the basis of materials and equipment not incorporated in the Work but delivered and suitably stored at the Site or at another location agreed to in writing, the Application for Payment shall also be accompanied by a bill of sale, invoice, or other documentation warranting that OWNER has received the materials and equipment free and clear of all Liens and evidence that the materials and equipment are covered by appropriate property insurance or other arrangements to protect OWNER's interest therein, all of which must be satisfactory to OWNER.

2. Beginning with the second Application for Payment, each Application shall include an affidavit of CONTRACTOR stating that all previous progress payments received on account of the Work have been applied on account to discharge CONTRACTOR's legitimate obligations associated with prior Applications for Payment.

* ~~3. The amount of retainage with respect to progress payments will be as stipulated in the Agreement.~~

B. *Review of Applications*

** ~~1. ENGINEER will, within 10 days after receipt of each Application for Payment, either indicate in writing a recommendation of payment and present the Application to OWNER or return the Application to CONTRACTOR indicating in writing ENGINEER's reasons for refusing to recommend payment. In the latter case, CONTRACTOR may make the necessary corrections and resubmit the Application.~~

2. ENGINEER's recommendation of any payment requested in an Application for Payment will constitute a representation by ENGINEER to OWNER, based on ENGINEER's observations on the Site of the executed Work as an experienced and qualified design professional and on ENGINEER's review of the Application for Payment and the accompanying data and schedules, that to the best of ENGINEER's knowledge, information and belief:

a. the Work has progressed to the point indicated;

b. the quality of the Work is generally in accordance with the Contract Documents (subject to an evaluation of the Work as a functioning whole prior to or upon Substantial Completion, to the results of any subsequent tests called for in the Contract Documents, to a final determination of quantities and classifications for Unit Price Work under paragraph 9.08, and to any other qualifications stated in the recommendation); and

c. the conditions precedent to CONTRACTOR's being entitled to such payment appear to have been fulfilled in so far as it is ENGINEER's responsibility to observe the Work.

3. By recommending any such payment ENGINEER will not thereby be deemed to have represented that: (i) inspections made to check the quality or the quantity of the Work as it has been performed have been exhaustive, extended to every aspect of the Work in progress, or involved detailed inspections of the Work beyond the responsibilities specifically assigned to ENGINEER in the Contract Documents; or (ii) that there may not be other matters or issues between the parties that might entitle CONTRACTOR to be paid additionally by OWNER or entitle OWNER to withhold payment to CONTRACTOR.

4. Neither ENGINEER's review of CONTRACTOR's Work for the purposes of recommending payments nor ENGINEER's recommendation of any payment, including final payment, will impose responsibility on ENGINEER to supervise, direct, or control the Work or for the means, methods, techniques, sequences, or procedures of construction, or the safety precautions and programs incident thereto, or for CONTRACTOR's failure to comply with Laws and Regulations applicable to CONTRACTOR's performance of the Work. Additionally, said review or recommendation will not impose responsibility on ENGINEER to make any examination to ascertain how or for what purposes CONTRACTOR has used the moneys paid on account of the Contract Price, or to determine that title to any of the Work, materials, or equipment has passed to OWNER free and clear of any Liens.

5. ENGINEER may refuse to recommend the whole or any part of any payment if, in ENGINEER's opinion, it would be incorrect to make the representations to OWNER referred to in paragraph 14.02.B.2. ENGINEER may also refuse to recommend any such payment or, because of subsequently discovered evidence or the results of subsequent inspections or tests, revise or revoke any such payment recommendation previously made, to such extent as may be necessary in ENGINEER's opinion to protect OWNER from loss because:

a. the Work is defective, or completed Work has been damaged, requiring correction or replacement;

b. the Contract Price has been reduced by Written Amendment or Change Orders;

c. OWNER has been required to correct defective Work or complete Work in accordance with paragraph 13.09; or

d. ENGINEER has actual knowledge of the occurrence of any of the events enumerated in paragraph 15.02.A.

C. *Payment Becomes Due*
*

1. Ten days after presentation of the Application for Payment to OWNER with ENGINEER's recommendation, the amount recommended will (subject to the provisions of paragraph 14.02.D) become due, and when due will be paid by OWNER to CONTRACTOR.

**

D. *Reduction in Payment*

1. OWNER may refuse to make payment of the full amount recommended by ENGINEER because:

a. claims have been made against OWNER on account of CONTRACTOR's performance or furnishing of the Work;

b. Liens have been filed in connection with the Work, except where CONTRACTOR has delivered a specific Bond satisfactory to OWNER to secure the satisfaction and discharge of such Liens;

c. there are other items entitling OWNER to a set-off against the amount recommended; or

d. OWNER has actual knowledge of the occurrence of any of the events enumerated in paragraphs 14.02.B.5.a through 14.02.B.5.c or paragraph 15.02.A.

2. If OWNER refuses to make payment of the full amount recommended by ENGINEER, OWNER must give CONTRACTOR immediate written notice (with a copy to ENGINEER) stating the reasons for such action and promptly pay CONTRACTOR any amount remaining after deduction of the amount so withheld. OWNER shall promptly pay CONTRACTOR the amount so withheld, or any adjustment thereto agreed to by OWNER and CONTRACTOR, when CONTRACTOR corrects to OWNER's satisfaction the reasons for such action.

3. If it is subsequently determined that OWNER's refusal of payment was not justified, the amount wrongfully withheld shall be treated as an amount due as determined by paragraph 14.02.C.1.

14.03 CONTRACTOR's Warranty of Title

* ~~A. CONTRACTOR warrants and guarantees that title to all Work, materials, and equipment covered by any Application for Payment, whether incorporated in the Project or not, will pass to OWNER no later than the time of payment free and clear of all Liens.~~

14.04 Substantial Completion

A. When CONTRACTOR considers the entire Work ready for its intended use CONTRACTOR shall notify OWNER and ENGINEER in writing that the entire Work is substantially complete (except for items specifically listed by CONTRACTOR as incomplete) and request that ENGINEER issue a certificate of Substantial Completion. Promptly thereafter, OWNER, CONTRACTOR, and ENGINEER shall make an inspection of the Work to determine the status of completion. If ENGINEER does not consider the Work substantially complete, ENGINEER will notify CONTRACTOR in writing giving the reasons therefor. If ENGINEER considers the Work substantially complete, ENGINEER will prepare and deliver to OWNER a tentative certificate of Substantial Completion which shall fix the date of Substantial Completion. There shall be attached to the certificate a tentative list of items to be completed or corrected before final payment. OWNER shall have seven days after receipt of the tentative certificate during which to make written objection to ENGINEER as to any provisions of the certificate or attached list. If, after considering such objections, ENGINEER concludes that the Work is not substantially complete, ENGINEER will within 14 days after submission of the tentative certificate to OWNER notify CONTRACTOR in writing, stating the reasons therefor. If, after consideration of OWNER's objections, ENGINEER considers the Work substantially complete, ENGINEER will within said 14 days execute and deliver to OWNER and CONTRACTOR a definitive certificate of Substantial Completion (with a revised tentative list of items to be completed or corrected) reflecting such changes from the tentative certificate as ENGINEER believes justified after consideration of any objections from OWNER. At the time of delivery of the tentative certificate of Substantial Completion ENGINEER will deliver to OWNER and CONTRACTOR a written recommendation as to division of responsibilities pending final payment between OWNER and CONTRACTOR with respect to security, operation, safety, and protection of the Work, maintenance, heat, utilities, insurance, and warranties and guarantees. Unless OWNER and CONTRACTOR agree otherwise in writing and so inform ENGINEER in writing prior to ENGINEER's issuing the definitive certificate of Substantial Completion, ENGINEER's aforesaid recommendation will be binding on OWNER and CONTRACTOR until final payment.

B. OWNER shall have the right to exclude CONTRACTOR from the Site after the date of Substantial Completion, but OWNER shall allow CONTRACTOR reasonable access to complete or correct items on the tentative list.

14.05 Partial Utilization

A. Use by OWNER at OWNER's option of any substantially completed part of the Work which has specifically been identified in the Contract Documents, or which OWNER, ENGINEER, and CONTRACTOR agree constitutes a separately functioning and usable part of the Work that can be used by OWNER for its intended purpose without significant interference with CONTRACTOR's performance of the remainder of the Work, may be accomplished prior to Substantial Completion of all the Work subject to the following conditions.

1. OWNER at any time may request CONTRACTOR in writing to permit OWNER to use any such part of the Work which OWNER believes to be ready for its intended use and substantially complete. If CONTRACTOR agrees that such part of the Work is substantially complete, CONTRACTOR will certify to OWNER and ENGINEER that such part of the Work is substantially complete and request ENGINEER to issue a certificate of Substantial Completion for that part of the Work. CONTRACTOR at any time may notify OWNER and ENGINEER in writing that CONTRACTOR considers any such part of the Work ready for its intended use and substantially complete and request ENGINEER to issue a certificate of Substantial Completion for that part of the Work. Within a reasonable time after either such request, OWNER, CONTRACTOR, and ENGINEER shall make an inspection of that part of the Work to determine its status of completion. If ENGINEER does not consider that part of the Work to be substantially complete, ENGINEER will notify OWNER and CONTRACTOR in writing giving the reasons therefor. If ENGINEER considers that part of the Work to be substantially complete, the provisions of paragraph 14.04 will apply with respect to certification of Substantial Completion of that part of the Work and the division of responsibility in respect thereof and access thereto.

2. No occupancy or separate operation of part of the Work may occur prior to compliance with the requirements of paragraph 5.10 regarding property insurance.

14.06 Final Inspection

A. Upon written notice from CONTRACTOR that the entire Work or an agreed portion thereof is complete, ENGINEER will promptly make a final inspection with OWNER and CONTRACTOR and will notify CONTRACTOR in writing of all particulars in which this inspection reveals that the Work is incomplete or defective. CONTRACTOR shall immediately take such measures as are necessary to complete such Work or remedy such deficiencies.

14.07 Final Payment

A. *Application for Payment*

1. After CONTRACTOR has, in the opinion of ENGINEER, satisfactorily completed all corrections identified during the final inspection and has delivered, in accordance with the Contract Documents, all maintenance and operating instructions, schedules, guarantees, Bonds, certificates or other evidence of insurance certificates of inspection, marked-up record documents (as provided in paragraph 6.12), and other documents, CONTRACTOR may make application for final payment following the procedure for progress payments.

2. The final Application for Payment shall be accompanied (except as previously delivered) by: (i) all documentation called for in the Contract Documents, including but not limited to the evidence of insurance required by subparagraph 5.04.B.7; (ii) consent of the surety, if any, to final payment; and (iii) complete and legally effective releases or waivers (satisfactory to OWNER) of all Lien rights arising out of or Liens filed in connection with the Work.

3. In lieu of the releases or waivers of Liens specified in paragraph 14.07.A.2 and as approved by OWNER, CONTRACTOR may furnish receipts or releases in full and an affidavit of CONTRACTOR that: (i) the releases and receipts include all labor, services, material, and equipment for which a Lien could be filed; and (ii) all payrolls, material and equipment bills, and other indebtedness connected with the Work for which OWNER or OWNER's property might in any way be responsible have been paid or otherwise satisfied. If any Subcontractor or Supplier fails to furnish such a release or receipt in full, CONTRACTOR may furnish a Bond or other collateral satisfactory to OWNER to indemnify OWNER against any Lien.

B. *Review of Application and Acceptance*

** ~~1. If, on the basis of ENGINEER's observation of the Work during construction and final inspection, and ENGINEER's review of the final Application for Payment and accompanying documentation as required by the Contract Documents, ENGINEER is satisfied that the Work has been completed and CONTRACTOR's other obligations under the Contract Documents have been fulfilled, ENGINEER will, within ten days after receipt of the final Application for Payment, indicate in writing ENGINEER's recommendation of payment and present the Application for Payment to OWNER for payment. At the same time ENGINEER will also give written notice to OWNER and CONTRACTOR that the Work is acceptable subject to the provisions of paragraph 14.09. Otherwise,~~

~~ENGINEER will return the Application for Payment to CONTRACTOR, indicating in writing the reasons for refusing to recommend final payment, in which case CONTRACTOR shall make the necessary corrections and resubmit the Application for Payment.~~

C. *Payment Becomes Due*

1. Thirty days after the presentation to OWNER of the Application for Payment and accompanying documentation, the amount recommended by ENGINEER will become due and, when due, will be paid by OWNER to CONTRACTOR.

14.08 Final Completion Delayed

A. If, through no fault of CONTRACTOR, final completion of the Work is significantly delayed, and if ENGINEER so confirms, OWNER shall, upon receipt of CONTRACTOR's final Application for Payment and recommendation of ENGINEER, and without terminating the Agreement, make payment of the balance due for that portion of the Work fully completed and accepted. If the remaining balance to be held by OWNER for Work not fully completed or corrected is less than the retainage stipulated in the Agreement, and if Bonds have been furnished as required in paragraph 5.01, the written consent of the surety to the payment of the balance due for that portion of the Work fully completed and accepted shall be submitted by CONTRACTOR to ENGINEER with the Application for such payment. Such payment shall be made under the terms and conditions governing final payment, except that it shall not constitute a waiver of Claims.

14.09 Waiver of Claims

A. The making and acceptance of final payment will constitute:

1. a waiver of all Claims by OWNER against CONTRACTOR, except Claims arising from unsettled Liens, from defective Work appearing after final inspection pursuant to paragraph 14.06, from failure to comply with the Contract Documents or the terms of any special guarantees specified therein, or from CONTRACTOR's continuing obligations under the Contract Documents; and

2. a waiver of all Claims by CONTRACTOR against OWNER other than those previously made in writing which are still unsettled.

ARTICLE 15 - SUSPENSION OF WORK AND TERMINATION

15.01 OWNER May Suspend Work

**** ~~A. At any time and without cause, OWNER may suspend the Work or any portion thereof for a period of not more than 90 consecutive days by notice in writing to CONTRACTOR and ENGINEER which will fix the date on which Work will be resumed. CONTRACTOR shall resume the Work on the date so fixed. CONTRACTOR shall be allowed an adjustment in the Contract Price or an extension of the Contract Times, or both, directly attributable to any such suspension if CONTRACTOR makes a Claim therefor as provided in paragraph 10.05.~~

15.02 OWNER May Terminate for Cause

A. The occurrence of any one or more of the following events will justify termination for cause:

1. CONTRACTOR's persistent failure to perform the Work in accordance with the Contract Documents (including, but not limited to, failure to supply sufficient skilled workers or suitable materials or equipment or failure to adhere to the progress schedule established under paragraph 2.07 as adjusted from time to time pursuant to paragraph 6.04);

2. CONTRACTOR's disregard of Laws or Regulations of any public body having jurisdiction;

3. CONTRACTOR's disregard of the authority of ENGINEER; or

4. CONTRACTOR's violation in any substantial way of any provisions of the Contract Documents.

*

B. If one or more of the events identified in paragraph 15.02.A occur, OWNER may, after giving CONTRACTOR (and the surety, if any) seven days written notice, terminate the services of CONTRACTOR, exclude CONTRACTOR from the Site, and take possession of the Work and of all CONTRACTOR's tools, appliances, construction equipment, and machinery at the Site, and use the same to the full extent they could be used by CONTRACTOR (without liability to CONTRACTOR for trespass or conversion), incorporate in the Work all materials and equipment stored at the Site or for which OWNER has paid CONTRACTOR but which are stored elsewhere, and finish the Work as OWNER may deem expedient. In such case, CONTRACTOR shall not be entitled to receive any further payment until the Work is finished. If the unpaid balance of the Contract Price exceeds all claims, costs, losses, and damages (including but not limited to all fees and charges of engineers, architects, attorneys, and other professionals and all court or arbitration or other dispute resolution costs) sustained by OWNER arising out of or relating to completing the Work, such excess will be paid to CONTRACTOR. If such claims, costs, losses, and damages exceed such unpaid balance, CONTRACTOR shall pay the difference to OWNER. Such claims, costs, losses, and damages incurred by OWNER will be reviewed by ENGINEER as to their reasonableness and, when so approved by ENGINEER, incorporated in a Change Order. When exercising any rights or remedies

under this paragraph OWNER shall not be required to obtain the lowest price for the Work performed.

C. Where CONTRACTOR's services have been so terminated by OWNER, the termination will not affect any rights or remedies of OWNER against CONTRACTOR then existing or which may thereafter accrue. Any retention or payment of moneys due CONTRACTOR by OWNER will not release CONTRACTOR from liability.

15.03 OWNER May Terminate For Convenience

A. Upon seven days written notice to CONTRACTOR and ENGINEER, OWNER may, without cause and without prejudice to any other right or remedy of OWNER, elect to terminate the Contract. In such case, CONTRACTOR shall be paid (without duplication of any items):

1. for completed and acceptable Work executed in accordance with the Contract Documents prior to the effective date of termination, including fair and reasonable sums for overhead and profit on such Work;

2. for expenses sustained prior to the effective date of termination in performing services and furnishing labor, materials, or equipment as required by the Contract Documents in connection with uncompleted Work, plus fair and reasonable sums for overhead and profit on such expenses;

3. for all claims, costs, losses, and damages (including but not limited to all fees and charges of engineers, architects, attorneys, and other professionals and all court or arbitration or other dispute resolution costs) incurred in settlement of terminated contracts with Subcontractors, Suppliers, and others; and

4. for reasonable expenses directly attributable to termination.

B. CONTRACTOR shall not be paid on account of loss of anticipated profits or revenue or other economic loss arising out of or resulting from such termination.

15.04 CONTRACTOR May Stop Work or Terminate

A. If, through no act or fault of CONTRACTOR, the Work is suspended for more than 90 consecutive days by OWNER or under an order of court or other public authority, or ENGINEER fails to act on any Application for Payment within 30 days after it is submitted, or OWNER fails for 30 days to pay CONTRACTOR any sum finally determined to be due, then CONTRACTOR may, upon seven days written notice to OWNER and ENGINEER, and provided OWNER or ENGINEER do not remedy such suspension or failure within that time, terminate the Contract and recover from OWNER payment on the same terms as provided in paragraph 15.03. In lieu of terminating the Contract and without prejudice to any other right or remedy, if ENGINEER has failed to act on an Application for Payment within 30 days after it is submitted, or OWNER has failed for 30 days to pay CONTRACTOR any sum finally determined to be due, CONTRACTOR may, seven days after written notice to OWNER and ENGINEER, stop the Work until payment is made of all such amounts due CONTRACTOR, including interest thereon. The provisions of this paragraph 15.04 are not intended to preclude CONTRACTOR from making a Claim under paragraph 10.05 for an adjustment in Contract Price or Contract Times or otherwise for expenses or damage directly attributable to CONTRACTOR's stopping the Work as permitted by this paragraph.

ARTICLE 16 - DISPUTE RESOLUTION

16.01 Methods and Procedures

A. Dispute resolution methods and procedures, if any, shall be as set forth in the Supplementary Conditions. If no method and procedure has been set forth, and subject to the provisions of paragraphs 9.09 and 10.05, OWNER and CONTRACTOR may exercise such rights or remedies as either may otherwise have under the Contract Documents or by Laws or Regulations in respect of any dispute.

ARTICLE 17 - MISCELLANEOUS

17.01 Giving Notice

A. Whenever any provision of the Contract Documents requires the giving of written notice, it will be deemed to have been validly given if delivered in person to the individual or to a member of the firm or to an officer of the corporation for whom it is intended, or if delivered at or sent by registered or certified mail, postage prepaid, to the last business address known to the giver of the notice.

17.02 Computation of Times

A. When any period of time is referred to in the Contract Documents by days, it will be computed to exclude the first and include the last day of such period. If the last day of any such period falls on a Saturday or Sunday or on a day made a legal holiday by the law of the applicable jurisdiction, such day will be omitted from the computation.

17.03 Cumulative Remedies

A. The duties and obligations imposed by these General Conditions and the rights and remedies available hereunder to the parties hereto are in addition to, and are not to be construed in any way as a limitation of, any rights and remedies available to any or all of them which are otherwise imposed or available by Laws or Regulations, by special warranty or guarantee, or by other provisions of the Contract Documents, and the provisions of this paragraph will be as effective as if repeated specifically in the Contract Documents in connection with each particular duty, obligation, right, and remedy to which they apply.

17.04 Survival of Obligations

A. All representations, indemnifications, warranties, and guarantees made in, required by, or given in accordance with the Contract Documents, as well as all continuing obligations indicated in the Contract Documents, will survive final payment, completion, and acceptance of the Work or termination or completion of the Agreement.

17.05 Controlling Law

A. This Contract is to be governed by the law of the state in which the Project is located.

***** ******

SECTION 00800

SUPPLEMENTARY CONDITIONS

TABLE OF CONTENTS

Article Number	Title
1	DEFINITIONS AND TERMINOLOGY
2	PRELIMINARY MATTERS
3	CONTRACT DOCUMENTS: INTENT, AMENDING, REUSE
4	AVAILABILITY OF LANDS; SUBSURFACE AND PHYSICAL CONDITIONS; REFERENCE POINTS
5	BONDS AND INSURANCE
6	CONTRACTOR'S RESPONSIBILITIES
8	OWNER'S RESPONSIBILITIES
9	ENGINEER'S STATUS DURING CONSTRUCTION
11	COST OF THE WORK; CASH ALLOWANCES; UNIT PRICE WORK
12	CHANGE OF CONTRACT PRICE; CHANGE OF CONTRACT TIMES
13	TESTS AND INSPECTIONS; CORRECTION, REMOVAL OR ACCEPTANCE OF DEFECTIVE WORK
14	PAYMENTS TO CONTRACTOR AND COMPLETION
15	SUSPENSION OF WORK AND TERMINATION
17	MISCELLANEOUS

SUPPLEMENTARY CONDITIONS

AMENDMENTS TO GENERAL CONDITIONS

These Supplementary Conditions amend or supplement the Standard General Conditions of the Construction Contract (No. 1910-8, 1996 edition) and other provisions of the Contract Documents as indicated below. All provisions which are not so amended or supplemented remain in full force and effect.

ARTICLE 1. DEFINITIONS AND TERMINOLOGY

Add the following language at the beginning of definition 1.01 A.12 entitled "Contract Documents" in the General Conditions:

> "The Advertisement for Bids, Instructions to Bidders, State Regulations, ..."

Delete the words "The individual or entity named as such in the Agreement" in 1.01.A.19, “Engineer”, and insert the following in their place:

> "The individual or entity duly appointed by the Owner to undertake the duties and powers herein assigned to the Engineer, acting either directly or through duly appointed representatives."

Delete the words "and who is identified as such in the Supplementary Conditions" at the end of definition 1.01 A.20, entitled "ENGINEER'S Consultant."

Delete definition 1.01 A.41 entitled "Specifications" in the General Conditions in its entirety and insert the following in its place:

> "Sections included under Division 1 through Division 3 of the Contract Documents."

ARTICLE 2. PRELIMINARY MATTERS

SC-2.02

Delete paragraph 2.02A of the General Conditions in its entirety and insert the following in its place:

“A. OWNER shall furnish to CONTRACTOR up to 2 paper copies of the Contract Documents.”

SC-2.03

Add paragraph 2.03B:

Notwithstanding the time limitations provided in paragraph 2.03A, the OWNER may desire to commence the Contract Times later than the sixtieth day after the bid opening. The OWNER and CONTRACTOR, upon mutual agreement, may extend the commencement of the Contract Times to any date that they elect. OWNER must obtain CONTRACTOR's approval for extending the time beyond the dates/times stated in the Contract Documents.

SC-2.05

Delete paragraph 2.05C of the General Conditions in its entirety and insert the following in its place:

"C. Evidence of Insurance: CONTRACTOR shall deliver to OWNER, with a copy to the ENGINEER, Certificates of Insurance within 10 days after receipt of the notice of the acceptance of bid (and other evidence requested by OWNER) which CONTRACTOR is required to purchase and maintain in accordance with the requirements of Article 5."

ARTICLE 3. CONTRACT DOCUMENTS: INTENT, AMENDING, REUSE

SC-3.01

Add the following sentence at the end of Paragraph 3.01A of the General Conditions:

> "...by all. Each and every provision of law and clause required by law to be inserted in these Contract Documents shall be deemed to be inserted herein, and they shall be read and enforced as though it were included herein, and if through mistake or otherwise, any such provision is not inserted, or if not correctly inserted, then upon the application of either party, the Contract Documents shall forthwith be physically amended to make such insertion."

ARTICLE 4. AVAILABILITY OF LANDS; SUBSURFACE AND PHYSICAL CONDITIONS; REFERENCE POINTS

SC-4.02

Delete the term "Supplementary Conditions" of paragraph 4.02 A of the General Conditions and replace it with "Contract Documents".

SC-4.04

Change "of" to "or" on line 6 of paragraph 4.04 B.2 of the General Conditions.

Delete the following words from lines 8 and 9 of paragraph 4.04 B.2 of the General Conditions:

> "...or not shown or indicated with reasonable accuracy..."

SC-4.05

Add a new paragraph immediately after paragraph 4.05A of the General Conditions which is to read as follows:

"B. ENGINEER may check the lines, elevations and reference marks set by CONTRACTOR, and CONTRACTOR shall correct any errors disclosed by such check. Such a check shall

not be considered as approval of CONTRACTOR's work and shall not relieve CONTRACTOR of the responsibility for construction of the entire Work in accordance with the Contract Documents. CONTRACTOR shall furnish personnel to assist ENGINEER in checking lines and grades."

ARTICLE 5. BONDS AND INSURANCE

NOTICE TO CONTRACTOR:

1. Proof of Insurance coverage shall be furnished to the OWNER in accordance with the schedule for submittal of Bonds and Agreements.

2. Additionally refer to Article 2. PRELIMINARY MATTERS, Paragraph SC-2.05.C

SC-5.01

Insert these sentences following SC-5.01.A: The Surety Company providing the bonds shall have a rating of A or better within the Best Key Rating Guide and be licensed by the Massachusetts Division of Insurance. The CONTRACTOR shall pay the premiums for such Bonds.

SC-5.03

Delete the second sentence in paragraph 5.03A of the General Conditions, which begins "OWNER shall deliver to...."

SC-5.04

The limits of liability for the insurance required by paragraph 5.04A of the General Conditions shall provide coverage for not less than the following amounts or greater where required by law:

5.04 A.1 and 5.04 A.2 Workers' Compensation.

(1)	Worker's Compensation per	Statutory Requirements
(2)	Coverage B - Employer's Liability	$100,000/$500,000/$100,000

5.04 A.3, 5.04 A.4 and 5.04 A.5 Commercial General Liability Limits shall include coverage for Independent Contractors (also known as Owners and Contractors Protective Liability), explosion, collapse and underground hazard coverage (XCU), broad form property damage, blanket contractual liability and products/completed operations. The general aggregate limits shall be endorsed so that they respond on a per project and per location basis.

Limits:

$1,000,000 each occurrence

$2,000,000 general aggregate

$2,000,000 products/completed operations aggregate

5.04 A.6 Automobile Liability for owned, hired and non-owned vehicles:

(1)	Bodily injury:	$1,000,000	Combined single limit
(2)	Property damage	$1,000,000	Combined single limit

Revise the beginning of paragraph 5.04.B.1 to read as follows:

"with respect to insurance required by paragraphs 5.04.A.3 through 5.04.A.5 inclusive and paragraph 5.04.C, include as additional insureds…"

Delete paragraph 5.04.B.5 in its entirety and insert the following in its place:

"5. contains a provision that notice of cancellation of insurance be delivered in accordance with policy provisions. In addition, the CONTRACTOR and/or its insurance broker/agent shall immediately notify the OWNER and ENGINEER should any insurance coverage be cancelled. The CONTRACTOR shall immediately stop work on the Project and shall not resume work until the CONTRACTOR provides evidence, to the OWNER and ENGINEER, in the form of an acceptable insurance certificate, of new insurance coverage that replaces all cancelled coverage that is required for the Project."

Add two new paragraphs immediately after paragraph 5.04B of the General Conditions which are to read as follows:

"C. The CONTRACTOR shall also provide:

1. CONTRACTOR shall, as a minimum, purchase and maintain excess liability insurance in the umbrella form with a combined single limit of not less than $5,000,000 per occurrence and in the aggregate. Evidence of such excess liability shall be delivered to OWNER in accordance with paragraph 2.05C in the form of a

certificate indicating the policy numbers and limits of liability of all underlying insurance.

A. General Liability, Workers' Compensation, Automobile Liability and Umbrella Liability Policies will contain waivers of subrogation in favor of the Engineer and Owner.

2. If the aggregate limits of liability indicated in CONTRACTOR' insurance provided in accordance with paragraphs 5.03 and 5.04 are not sufficient to cover all claims for damages arising from his operations under this Contract and from any other work performed by him or if the commercial general liability insurance policy of insurance does not provide that the general aggregate limits apply on a per project and per location basis, CONTRACTOR shall have the policy amended so that the aggregate limits of liability required by this Contract will be available to cover all claims for damages due to operations under this Contract."

SC-5.05

Delete paragraph 5.05 of the General Conditions in its entirety.

SC-5.06

Delete Paragraph 5.06 A of the General Conditions in its entirety.

Delete paragraph 5.06B of the General Conditions in its entirety.

Delete Paragraph 5.06C of the General Conditions in its entirety.

Delete paragraph 5.06D of the General Conditions in its entirety.

Delete paragraph 5.06E of the General Conditions in its entirety.

SC-5.07

Amend the last sentence of paragraph 5.07A of the General Conditions by striking out the words "held by OWNER as trustee or." As so amended, paragraph 5.07A remains in effect.

SC-5.08

Delete paragraph 5.08A of the General Conditions in its entirety.

Delete paragraph 5.08B of the General Conditions in its entirety.

SC-5.09

Delete paragraph 5.09A of the General Conditions in its entirety and insert the following in its place:

"A. If OWNER has any objection to the coverage afforded by or other provisions of the insurance required to be purchased and maintained by CONTRACTOR in accordance with this Article 5 on the basis of its not complying with the Contract Documents, OWNER will notify CONTRACTOR in writing thereof within thirty days of the date of delivery of such certificates to OWNER in accordance with paragraph 2.05C. CONTRACTOR will provide such additional information in respect of insurance provided by him as OWNER may reasonably request."

ARTICLE 6. CONTRACTOR'S RESPONSIBILITIES

SC-6.01

Delete paragraph 6.01B of the General Conditions in its entirety and replace with the following:

"B. At the site of the Work the CONTRACTOR shall employ a full-time construction superintendent or foreman who shall have full authority to act for the CONTRACTOR. It is understood that such representative shall be acceptable to the ENGINEER and shall be one who will be continued in the capacity for the particular job involved unless the representative ceases to be on the CONTRACTOR's payroll. If at any time during the Work the representative is deemed by the ENGINEER to be no longer acceptable, the representative shall be promptly replaced by the CONTRACTOR. All communications to the superintendent or foreman shall be as binding as if given to the CONTRACTOR."

SC-6.05

Revise the second sentence of Paragraph A to read as follows:

“Unless the specification indicates that a proprietary item is called for, other items of material or equipment or material or equipment of other suppliers may be submitted to ENGINEER for review under the circumstances described below, and in accordance with MGL c.30, s.39M.”

SC-6.17

In paragraph 6.17 E.1 of the General Conditions, delete the word “timely” from the first line.

SC-6.20

Delete paragraph 6.20A of the General Conditions in its entirety and replace with the following:

"A. To the fullest extent permitted by law, the CONTRACTOR shall indemnify and hold harmless the OWNER, the ENGINEER, ENGINEER's consultants, and any of their officers, directors, employees, agents, affiliates, subsidiaries and partners from and against all claims, damages, losses and expenses, including but not limited to attorney's fees, arising out of or resulting from the performance of the Work, provided that such claim, damage, loss or expense is attributable to bodily injury, sickness, disease or death, or to injury to or destruction of tangible property (other than the Work itself) including loss of

use resulting therefrom, but only to the extent caused in whole or in part by acts or omissions of the CONTRACTOR, a subcontractor, anyone directly or indirectly employed by them or anyone for whose acts they may be liable, regardless of whether or not such claim, damage, loss or expense is caused in part by a party indemnified hereunder. Such obligation shall apply to any such claims, damages, losses and expenses which arise and/or are incurred by any person or entity either during the performance of the Work and/or after completion of construction. Nothing in this paragraph shall be construed to negate, abridge, or reduce other rights or obligations of indemnity or contribution which would otherwise exist as to a party or person indemnified hereunder. CONTRACTOR hereby assumes the responsibility and liability for injury to or death of any and all persons, including the CONTRACTOR's employees, and for any and all damage to property caused by, resulting from, or arising out of any act, omission or neglect on the part of the CONTRACTOR, or of any Subcontractor or of anyone directly or indirectly employed by any of them or of anyone for whose acts, any of them may be liable. The Contractor hereby acknowledges its obligation under the foregoing paragraph to indemnify the Engineer and Owner against judgments suffered because of the contractor's work and to assume the cost of defending the Engineer and Owner against claims as described in the foregoing paragraph."

Delete paragraph 6.20C of the General Conditions in its entirety.

ARTICLE 8. OWNER'S RESPONSIBILITIES

SC-8.02

Delete the phrase “to whom the CONTRACTOR makes no reasonable objection.”

SC-8.06

Delete paragraph 8.06A of the General Conditions in its entirety.

SC-8.09

Insert the following after the first sentence:

“However, the OWNER shall have the right to direct the CONTRACTOR to perform the Work according to any sequence schedule set forth in the Contract Documents or established pursuant thereto.”

ARTICLE 9. ENGINEER'S STATUS DURING CONSTRUCTION

SC-9.01

Add a new paragraph 9.01B after paragraph 9.01A of the General Conditions, which is to read as follows:

"B. Nothing contained in the Contract Documents shall be construed to create a contractual relationship of any kind (1) between the ENGINEER and CONTRACTOR, (2) between the

OWNER and a Subcontractor or Subcontractors, or (3) between any person or entities other than the OWNER and CONTRACTOR. The ENGINEER shall, however, be entitled to performance and enforcement of obligations under the CONTRACT DOCUMENTS intended to facilitate performance of the ENGINEER'S duties."

SC-9.10

Insert the following after the first sentence on paragraph 9.10B:

"“However, the ENGINEER shall have the right to direct the CONTRACTOR to perform the Work according to any sequence schedule set forth in the Contract Documents or established pursuant thereto.”

ARTICLE 11. COST OF THE WORK; CASH ALLOWANCES; UNIT PRICE WORK

Delete Article 11 of the General Conditions in its entirety and replace with the following:

"A. The unit price of an item of Unit Price work shall be subject to reevaluation and adjustment under the following conditions:

(1) If the total extended bid price [Estimated Quantity times the Bid Unit Price] of a particular item of Unit Price Work amounts to 5 percent or more of the Original Contract Price and the variation in the quantity of the particular item of Unit Price Work performed by CONTRACTOR differs by more than 15 percent from the estimated quantity of such item indicated in the Agreement;
and

(2) If there is no corresponding adjustment with respect to any other item of work; and

(3) If CONTRACTOR believes that CONTRACTOR has incurred additional expense as a result thereof, CONTRACTOR may make a claim for an adjustment in the Contract Price in accordance with Article 11 if the parties are unable to agree as to the effect of any such variations in the quantity of Unit Price Work performed. If OWNER believes that the quantity variation entitles OWNER to an adjustment in the unit price, OWNER shall be entitled to an adjustment in the unit price in an amount determined by the ENGINEER. ENGINEER shall not be liable in connection with any determination relating to adjustments which is rendered in good faith."

ARTICLE 12. CHANGE OF CONTRACT PRICE; CHANGE OF CONTRACT TIMES

SC-12.01

Delete paragraph 12.01 in its entirety.

SC-12.06

Add the following new paragraphs after paragraph 12.06 of the General Conditions:

"12.07 Liquidated Damages:

A. If the CONTRACTOR shall neglect, fail or refuse to complete the work within the time herein specified, or any proper extension thereof granted by the OWNER, then the CONTRACTOR does hereby agree, as a part consideration for the awarding of this Contract, to pay to the OWNER the amount specified in the Contract, not as a penalty but as liquidated damages for such breach of contract as hereinafter set forth, for each and every calendar day that the Contract shall be in default after the time stipulated in the Contract for completing the work. Such damages may be retained from time to time by the OWNER from progress payments or any amounts owing to the CONTRACTOR, or otherwise collected.

B. The said amount is fixed and agreed upon by and between the CONTRACTOR and the OWNER because of the impracticability and extreme difficulty of fixing and ascertaining the actual damages the OWNER would in such event sustain, and said amount is agreed to be the amount of damages which the OWNER would sustain and said amount shall be retained from time to time by the OWNER from current periodical estimates.

C. It is further agreed that time is of the essence of each and every portion of this Contract and of the specifications wherein as definite and certain length of times if fixed for the performance of any act whatsoever; and where under the Contract an additional time is allowed for the completion of any work, the new time limit fixed by such extension shall be of the essence of this Contract. Provided that the CONTRACTOR shall not be charged with liquidated damages of any excess cost when the OWNER determines that the CONTRACTOR is without fault and the CONTRACTOR's reasons for the time extension are acceptable to the OWNER; Provided, further, that the CONTRACTOR shall not be charged with liquidated damages or any excess cost when the delay in completion of the work is due:

1) to any preference, priority or allocation order duly issued by the Government;

2) to unforeseeable cause beyond the control and without the fault or negligence of the CONTRACTOR, including, but not restricted to, acts of God, or of the public enemy, acts of the OWNER, acts of another CONTRACTOR in the performance of a contract with the OWNER, fires, floods, epidemics, quarantine restrictions, strikes, freight embargoes, and severe weather; and

3) to any delays of subcontractors or suppliers occasioned by any of the causes specified in subsections C (1) and C (2) above;

D. Provided, further, that the CONTRACTOR shall, within thirty (30) days from the beginning of such delay, unless the OWNER shall grant a further period of time prior to the date of final settlement of the Contract, notify the OWNER, in writing, of the causes of the delay, who shall ascertain the facts and extent of the delay and notify the CONTRACTOR within a reasonable time of its decision in the matter."

ARTICLE 13. TESTS AND INSPECTIONS; CORRECTION, REMOVAL OR ACCEPTANCE OF DEFECTIVE WORK

SC-13.07

Delete paragraph 13.07A of the General Conditions and insert the following in its place:

"A. If within one year after the date of Substantial Completion or such longer period of time as may be prescribed by Laws or Regulations or by the terms of any applicable special guarantee required by the Contract Documents or by any specific provision of the Contract Documents, any work is found to be defective, CONTRACTOR shall promptly, without cost to OWNER and in accordance with OWNER's written instructions: (i) correct such defective work, or, if it has been rejected by OWNER, remove it from the site and replace it with work that is not defective, and (ii) satisfactorily correct or remove and replace any damage to other work or the work of others therefrom. If CONTRACTOR does not begin the repairs within ten (10) days of receipt of written notification and promptly comply with the terms of OWNER's written instructions, or in an emergency where delay would cause serious risk, loss or damage, OWNER may have the defective work corrected or the rejected work removed and replaced, and all claims, costs, losses and damages caused by or resulting from such removal and replacement (including but not limited to all costs of repair or replacement of work of others) will be paid by CONTRACTOR."

SC-13.09

Revise paragraph 13.09A of the General Conditions

A. Delete the word "seven" and replace it with the word "ten" so that it reads "after ten days written notice to CONTRACTOR."

ARTICLE 14. PAYMENTS TO CONTRACTOR AND COMPLETION

SC-14.02

Delete paragraph 14.02A.3 and insert the following in its place:

"3. Retainage with respect to progress payments will be five percent or, if stipulated, the maximum allowed by law."

Add Paragraph 4. to read as follows:

"4. The CONTRACTOR shall submit Weekly Payroll Records Report and Statement of Compliance verifying compliance with the Minimum Prevailing Wage Law, MGL ch. 149, Sections 26-27H. These Statements of Compliance shall be submitted as a condition of payment for work performed during the period the reports apply."

SC-14.03

Delete paragraph 14.03A in its entirety and insert the following in its place:

"A. CONTRACTOR warrants and guarantees that title to all work, material and equipment covered by any Application for Payment, whether incorporated in the Project or not, will pass to OWNER no later than at the time of Application for Payment free and clear of all liens. CONTRACTOR shall provide written transfer of title and a certified paid invoice provided by the supplier."

ARTICLE 15. SUSPENSION OF WORK AND TERMINATION

SC-15.02

Add a new paragraph immediately after paragraph 15.02 A.4 of the General Conditions which is to read as follows:

"5. If the Work to be done under this Contract shall be abandoned, or if this Contract or any part thereof shall be sublet, without the previous written consent of OWNER, or if the contract or any claim thereunder shall be assigned by CONTRACTOR otherwise than as herein specified;"

ARTICLE 17. MISCELLANEOUS

SC-17.06, 17.07, 17.08, 17.09

Add the following new paragraphs after paragraph 17.05 of the General Conditions:

"17.06 Assignment:

A. The CONTRACTOR shall not assign the whole or any part of this Contract or any moneys due or to become due hereunder until thirty (30) days prior notice in writing has been given to the OWNER of the intention to assign, which notice shall state the identity and address of the prospective assignee. No assignment shall be made without the OWNER's prior written consent. Such consent shall not be unreasonably withheld. In case the CONTRACTOR assigns all or any part of the moneys due or to become due under this Contract, the instrument of assignment shall contain a clause substantially to the effect that it is agreed that the right of the assignee in and to any moneys due or to become due to the CONTRACTOR shall be subject to prior claims of all persons, firms and corporations of services rendered or materials supplied for the performance of the work called for in this Contract."

17.07 Liability

It is understood and agreed that members of the OWNER or the ENGINEER or any agent or employees of the OWNER signing this Agreement shall not be personally liable hereunder for any action incurred in connection with this Agreement.

17.08 State Statutes and Regulations

See Section 00830 for further modifications of the General Conditions due to state statutes and regulations.

17.09 Severability

If any provision of this Agreement shall be invalid or unenforceable to any extent or in any application, then the remainder of this Agreement and of such terms and conditions, except to such extent or in such application, shall not be affected thereby, and each and every term and condition of this Agreement shall be valid and enforced to the fullest extent and in the broadest application permitted by law."

END OF SECTION

O:\Quincy MA\FY 2016 Water Main Project\Design\Specifications\00800.docx

SUPPLEMENTARY CONDITIONS - PART II

ARTICLE 1 STATUTORY REQUIREMENTS IN GENERAL

1.1 The Contractor shall keep himself fully informed of all existing and future State and Federal Laws and Municipal Ordinances and Regulations in any manner affecting those engaged or employed in the work or in any way affecting the conduct of the work, and of all such orders and decrees of bodies or tribunals having jurisdiction or authority over same and of all provisions required by law to be made a part of this contract, all of which provisions are hereby incorporated by reference and made a part thereof. If any discrepancy or inconsistency is discovered in the drawings or specifications or contract documents for this work in relation to any such law, ordinance, regulation, order or decree, he shall forthwith report the same to the Engineer in writing. He shall at all times himself observe and comply with, and shall cause all his agents and employees to observe and comply with, all such existing and future laws, ordinances, regulations, orders and decrees; and he shall protect and indemnify the City and Engineer and all of its and their officers, agents and servants against any claim of liability arising from or based on the violation of any such law, ordinance, regulation, order or decree, whether by himself or his employees or sub-contractors.

1.2 All materials furnished and work done are to comply with all State, Federal and local laws and regulations.

1.3 All applicable laws, ordinances, and rules and regulations of all authorities having jurisdiction over the construction of the project shall apply to the contract throughout.

ARTICLE 2 DELETED

ARTICLE 3 DELETED

ARTICLE 4 SAFETY AND HEALTH REGULATIONS

4.1 The Successful Bidder shall comply with the Department of Labor Safety and Health Regulations for Construction promulgated under the Occupational Safety and Health Act of 1970 (PS-91-569) and under Section 107 of the Contract Work Hours and Safety Standards Act (PL-91-54).

4.2 This project is subject to the Safety and Health Regulations of the Massachusetts Department of Labor and Industries, Division of Industrial Safety "Rules and Regulations for the Prevention of Accidents in Construction Operations (Chapter 454 CMR, 10.0 et. seq.)".

4.3 This project is subject to all of the Safety and Health Regulations (CFR, Part 1926, and all subsequent amendments) as promulgated by the U.S. Department of Labor on June 24, 1974

and CFR 29, Part 1910, General Industry Safety and Health Regulations Identified as Applicable to Construction.

4.4 The Successful Bidder shall have a competent person or persons, as required under the Occupational Safety and Health Act on the site to inspect the work and to supervise the conformance of the work with the regulations of the Act.

4.5 All excavations within public or private ways are subject to the requirements of the Massachusetts General Law, Acts of 1983, Chapter 353, included in Part II of the Supplementary Conditions.

ARTICLE 5 PERMITS AND LICENSES

5.1 Deleted

5.2 The Contractor shall procure all permits and licenses required, pay all charges and fees therefore, and shall give all notices necessary and incidental to the due and lawful prosecution of the Project. The cost thereof shall be included in the prices bid for the various items listed in the proposal.

The permits shall also include all building and other permits required for his equipment, work force or particular operations (such as blasting or local street opening permits), in the performance of the work.

ARTICLE 6 CHANGE ORDERS

6.1 Change Orders will be completed by the Contractor using the form enclosed on the following page. The City will **not** accept any other form as a substitute.

City of Quincy, Massachusetts
Purchasing Department
1305 Hancock Street, Quincy, MA 02169

Phone #: 376-1060
Fax #: 376-1074

CHANGE ORDER/AMENDMENT # _____

Made in Quintuplicate this day (DATE)_____ between the City of Quincy, Massachusetts, a Municipal Corporation, within the County of Norfolk, Party of the first part and:(pring name & address of Company below)

party of the second part.

WITNESSETH: That for and in consideration of the following mutual covenants contained herein the parties agree to amend Contract # _____ Of the City of Quincy, dated _____ between the same parties as follows:

ARTICLE I: In Article I, we are INCREASING/DECREASING the Contract by $_____
Because: (list below reason)
Justification:_____(Attached - Refer to Page 2)_____

ARTICLE II: In Article II of the Contract, for (SPECIFY COMMODITY) _____

between the same parties, strike out the words and figures: $_____

_____
AMOUNT IN WORDS

and substitute the words and figures: $_____

_____
AMOUNT IN WORDS

WITNESS:

_____
WITNESS (CITY OF QUINCY)

Sufficient funds are available to cover this change order in the contract account to be charged.

_____
CITY AUDITOR

_____
VENDOR SIGNATURE

_____
COMMISSIONER OF PUBLIC WORKS

CITY OF QUINCY

_____
MAYOR

_____
CITY SOLICITOR

_____
PURCHASING AGENT

DEPT.:_____

P.O. #: _____

CODE: _____

PROJECT NAME: _____

PROJECT NUMBER: _____

CONTRACT # : _____

CHANGE ORDER # : _____

CONTRACT AMOUNT: (As bid): _____

CHANGE IN CONTRACT PRICE (this change order): _____

TOTAL ADJUSTED CONTRACT PRICE (including allCOs): _____

Reason for Change Order:

(1)	Additional Work	_____	(2)	Field Change	_____
(3)	Change in Bid Quantities	_____	(4)	Change in Schedule	_____

a. Time to complete the work is extended by _____ calendar days.

b. Extended completion date is _____ .

Reason & Description of Change:

Supporting Documents (List or attach, as necessary):

This Change Order Has Been Requested By: CONTRACTOR _____ CITY _____

This Change Order Has Been Reviewed by: _____ _____
(Resident Engineer/Clerk of Works) (Date)

and _____ _____ _____
(City/Consultant Engineer/Architect) (Stamp#) (Date)

ARTICLE 7

SUPPLEMENTARY CONDITIONS - COMMONWEALTH OF MASSACHUSETTS

INDEX

All Mass. General Laws listed below are deemed inserted by reference in this contract. It is understood that the latest amendments to these laws shall also be inserted by reference.

1. METHOD OF PAYING SUBCONTRACTORS
   MGL C. 30; s. 39F

2. METHOD OF PAYING GENERAL CONTRACTORS - COMPLETION OF PUBLIC WORKS: SEMI-FINAL AND FINAL ESTIMATES: PAYMENTS: EXTRA WORK: DISPUTED ITEMS
   MGL C. 30, s. 39G

3. CLAIMS FOR UNFORESEEN CONDITIONS
   MGL C.30, s. 39N

4. CLAIMS FOR DELAY
   MGL C.30, s. 39O

5. DECISIONS AND APPROVALS BY ENGINEER OR ARCHITECT
   MGL C 30, s. 39P

6. PREFERENCE IN EMPLOYMENT, WAGES
   MGL C.149, s.26

7. HOURS OF WORK
   MGL C.149, s.34

8. WORK BY FOREIGN CORPORATIONS
   MGL C.30, s. 39L

9. MINIMUM WAGE RATES
   MGL C. 149, s. 26-27D

10. RECORD KEEPING
    MGL C. 30, S. 39R

ARTICLE 8

THE COMMONWEALTH OF MASSACHUSETTS
&
CITY OF QUINCY

SUPPLEMENTAL EQUAL EMPLOYMENT OPPORTUNITY ANTI-DISCRIMINATION AND AFFIRMATIVE ACTION PROGRAM

I. For purposes of this contract, "minority" refers to Asian-Americans, Blacks, Spanish Surnamed Americans, North American Indians, and Cape Verdeans. "Commission" refers to the Massachusetts Commission Against Discrimination.

II. During the performance of this contract, the contractor and all of his subcontractors (hereinafter collectively referred to as the Contractor), for himself, his assignees and successors in interest, agree as follows:

1. In connection with the performance of work under this contract, the Contractor shall not discriminate against any employee or applicant for employment because of race, color, religious creed, national origin, age or sex. The aforesaid provision shall include, but not be limited to the following: employment upgrading, demotion or transfer, recruitment advertising, recruitment layoff, termination, rates of pay or other forms of compensation, conditions or privileges of employment, and selection for apprenticeship. The Contractor shall post hereafter in conspicuous places, available for employees and applicants for employment, notices to be provided by the Commission setting forth the provisions of the Fair Employment Practices Law of the Commonwealth (M.G.L. Chapter 151B).

2. In connection with the performance of work under this Contract, the Contractor shall undertake in good faith affirmative action measures designed to eliminate any discriminatory barriers in the terms and conditions of employment on the grounds of race, color, religious creed, national origin, age or sex, and to eliminate and remedy any effects of such discrimination in the past. Such affirmative action shall entail positive and aggressive measures to ensure equal opportunity in the areas of hiring, upgrading, demotion or transfer, recruitment, layoff or termination, rate of compensation, and in-service or apprenticeship training programs. This affirmative action shall include all action required to guarantee equal employment opportunity for all persons, regardless of race, color, religious creed, national origin, age or sex. A purpose of this provision is to ensure to the fullest extent possible an adequate supply of skilled tradesmen for this and future Commonwealth public construction projects.

III. 1. As part of his obligation of remedial action under the foregoing section, the Contractor shall maintain on this project a not less than 10% ratio of minority employee man hours to total man hours in each job category including but not limited to bricklayers, carpenters, cement masons, electricians, ironworkers, operating engineers, and those "classes of work" enumerated in Section 44C of Chapter 149 of the Massachusetts General Laws.

2. In the hiring of minority journeymen, apprentices, trainees and advanced trainees, the Contractor shall rely on referrals from a multi-employer affirmative action program approved by the Commission, traditional referral methods utilized by the construction industry, and referrals from agencies, not more than three in number at any one time, designated by the Liaison Committee or the Commission.

IV. 1. At the discretion of the Commission there may be established for the life of this contract a body to be known ad the Liaison Committee. The Liaison Committee shall be composed of one representative each from the agency or agencies administrating this project, hereinafter called the administering agency, the Commission and such other representatives as may be designated by the Commission in conjunction with the administering agency.

2. The Contractor (or his agent, if any, designated by him as the on-site equal employment opportunity officer) shall recognize the Liaison Committee as an affirmative action body, and shall establish a continuing working relationship with the Liaison Committee, consulting with the Liaison Committee on all matters related to minority recruitment, referral, employment and training.

3. The Contractor shall prepare projected manning tables on a quarterly basis. These shall be broken down into projections, by week, or workers required in each trade. Copies shall be furnished one week in advance of the commencement of the period covered, and also when updated to the Commission and Liaison Committee.

4. Records of employment referral orders, prepared by the Contractor, shall be made available to the Commission and to the Liaison Committee on request.

5. The Contractor shall prepare weekly reports in a form approved by the Commission of hours worked in each trade by each employee, identified as minority or non-minority. Copies of these shall be provided at the end of each such week to the Commission and to the Liaison Committee.

V. If the Contractor shall use any subcontractor on any work performed under this contract, he shall take affirmative action to negotiate with qualified minority subcontractors. This affirmative action shall cover both pre-bid and post-bid periods. It shall include modification

to the Office of Minority Business Assistance (within the Executive Office of Communities and Development) or its designee, while bids are in preparation, of all products, work or services for which the Contractor intends to negotiate bids.

VI. In the employment of journeymen, apprentices, trainees and advanced trainees, the Contractor shall give preference, first, to citizens of the Commonwealth who have served in the armed forces of the United States in time of war and have been honorably discharged therefrom or released from active duty therein, and who are qualified to perform the work to which the employment related, and, secondly, to citizens of the Commonwealth generally, and, if such cannot be obtained in sufficient numbers, then to citizens of the United States.

VII. A designee of the commonwealth and a designee of the Liaison Committee shall each have right of access to the construction site.

VIII. Compliance with Requirements

The Contractor shall comply with the provision of Executive Order No. 74 as amended by Executive Order No.116 dated May 1, 1975, and of Chapter 151B, as amended, of the Massachusetts General Laws, both of which are herein incorporated by referenced and made a part of this contract.

IX. Non-Discrimination

The Contractor, in the performance of all work after award, and prior to completion of the contract work, will not discriminate on grounds of race, color, religious creed, national origin, age or sex in employment practices in the selection or retention of subcontractors, or in the procurement of materials and rentals of equipment.

X. Solicitations for Sub-Contracts,
and for the Procurement of Materials and Equipment

In all solicitations either by competitive bidding or negotiation made by the Contractor either for work to be performed under a subcontract or for the procurement of materials or equipment, each potential subcontractor or supplier shall be notified in writing by the Contractor of the Contractor's obligations under this Contract relative to non-discrimination and affirmative action.

XI. Bidders Certification Requirement

1. The bidders certification form currently in use will be deleted from all future bid documents.

2. The following certification statement will be inserted in the bid document just above

the bidder's signature, as a substitute for the present bidder certification form.

"The bidder hereby certifies he shall comply with the minority manpower ratio and specific action steps contained in the appendix EEO attached hereto, including compliance with the minority contractor compliance specified in Section V of said appendix. The contractor receiving the award of the contract shall be required to obtain from each of its subcontractors and submit to the contacting or administering agency prior to the performance of any work under said contract a certification by said subcontractor, regardless of tier that it will comply with the minority manpower ratio and specific affirmative action steps contained in the appendix EEO.

XII. Contractor's Certification

The Contractors certification form must be signed by all successful low-bidder(s) prior to award by the contracting agency.

XIII. Compliance-Information, Reports and Sanctions

1. The Contractor will provide all information and reports required by the administering agency or the Commission on instructions issued by either of them and will permit access to its facilities and any books, records, accounts and other sources of information which may be determined by the Commission to affect the employment of personnel. This provision shall apply only to information pertinent to the Commonwealth's supplementary affirmative action contract requirements. Where information required is in the exclusive possession of another who fails or refuses to furnish this information, the Contractor shall so certify to the administering agency or the Commission as appropriate and shall set forth what efforts he has made to obtain the information.

2. Whenever the administering agency, the Commission, or the Liaison Committee believes the General Contractor or any Subcontractor may not be operating in compliance with the terms of this Section, the Commission directly, or through its designated agent, shall conduct an appropriate investigation, and may confer with the parties, to determine if such Contractor is operating in compliance with the terms of this Section. If the Commission or its agent finds the General Contractor or any subcontractor not in compliance, it shall make a preliminary report on non-compliance, and notify such Contractor in writing of such steps as will in the judgement of the Commission or its agent bring such Contractor into compliance. In the event that such Contractor fails or refuses to fully perform such steps, the Commission or its agent shall make a final report of non-compliance, and recommend to the administering agency the imposition of one or more of the sanctions listed below. If, however, the Commission believes the General Contractor or any Subcontractor has taken or is taking every possible measure to achieve

compliance, it shall not make a final report of non-compliance. Within fourteen days of the receipt of the recommendations of the Commission, the administering agency shall move to impose one or more of the following sanctions, as it may deem appropriate to attain full and effective enforcement:

a. The recovery by the administering agency from the General Contractor of 1/100 of 1% of the contract award price or $1,000, whichever sum is greater, in the nature of liquidated damages or, if a subcontractor is in non-compliance, the recovery by the administering agency from the General Contractor, to be assessed by the General Contractor as a back charge against the Subcontractor, of 1/10 of 1% of the subcontract price, or $400., whichever is greater, in the nature of liquidated damages, for each week that such party fails or refuses to comply;

b. The suspension of any payment or part thereof due under the contract until such time as the General Contractor or any Subcontractor is able to demonstrate his compliance with the terms of the contract;

c. The termination, or cancellation of the contract, in whole or in part, unless the General Contractor or any Subcontractor is able to demonstrate within a specified time his compliance with the terms of the contract;

d. The denial to the General Contractor or any Subcontractor of the right to participate in any future contracts awarded by the administering agency for a period of up to three years.

3. If at any time after the imposition of one or more of the above sanctions a Contractor is able to demonstrate that he is in compliance with this Section, he may request the administering agency, in consultation with the Commission, to suspend the sanctions conditionally, pending a final determination by the Commission as to whether the Contractor is in compliance. Upon final determination of the Commission, the administering agency, based on the recommendation of the Commission, shall either lift the sanctions or reimpose them.

4. Sanctions enumerated under Sections XII-2 shall not be imposed by the administering agency except after an adjudicatory proceeding, as that term is used M.G.L. c.30A, has been conducted. No investigation by the Commission or its agent shall be initiated without prior notice to the Contractor.

XIV. <u>Severability</u>

The provisions of this section are severable, and if any of these provisions shall be held unconstitutional by any court of competent jurisdiction, the decision of such court shall not

affect or impair any of the remaining provisions.

301. CMR 50.00: AFFIRMATIVE ACTION

Section

50.01: Declaration of Policy
50.02: Purpose and Scope
50.03: Definitions
50.04: Employment Policies of Agencies Within EOEA
50.05: State Services and Facilities
50.06: Eligibility for Financial Assistance
(301 CMR 50.07 and 50.08: RESERVED)
50.09: Construction Projects Conducted by Agencies
50.10: Construction Projects Conducted by Grantees
(301 CMR 50.11 through 50.13: RESERVED)
50.14: Compliance and Sanctions
50.15: Severability
50.16: Appendix 1. Executive Order 74 (as amended and revised by Executive Order 116) the Governor's Code of Fair Practices.
50.17: Appendix 2. Supplemental Equal Employment Opportunity Anti-Discrimination and Affirmative Action Program
50.18: Appendix 3. Equal Employment Opportunity Guidelines
50.19: Appendix 4. Fair Housing Guidelines
50.20: Appendix 5. Memorandum of Agreement
50.21: Appendix 6. Goals and Timetables Adopted Pursuant to the Department of Labor's Regulations 41 CFR 60-4.6
50.22: Appendix 7. Rules of Procedure for Hearings on Compliance with the Commonwealth's Equal Employment Policy and Anti-Discrimination and Affirmative Action Plan

50.01: Declaration of Policy

(1) Non-discrimination and equal opportunity are the policy of the Executive Office of Environmental Affairs in all of its decisions, programs and activities. To that end, all agency employees shall rigorously take affirmative steps to ensure equality of opportunity in the internal affairs of all agencies as well as in their relations with the public, including those persons and organizations doing business with any agency of the Executive Office of Environmental Affairs. Each agency, in discharging its decisions, programs and activities shall have in meeting the goal of equality of opportunity.

(2) Affirmative action requires more than vigilance in the elimination of discriminatory barriers on the grounds of race, color, creed, national origin, age, and sex. It must also entail positive and aggressive measures to ensure equal opportunity in internal personnel practices and in those

programs which can affect persons and political subdivisions outside of state government. This affirmative action shall include efforts necessary to remedy the effects of present and past discriminatory patterns and practices and any action necessary to guarantee equal opportunity for all people.

(3) All agencies shall initiate affirmative action programs designed to conform to this policy. All such affirmative action programs shall be subject to review by the Executive Office of Administration and Finance, or such other Office or person as may be designated by the Governor, and the Massachusetts Commission Against Discrimination, as provided in 301 CMR 50.16 (Appendix 1, Executive Order 74, as amended by Executive Order No. 116, the Governor's Code of Fair Practice).

(4) All powers, functions and duties granted to the Secretary of Environmental Affairs under any provision of law shall be construed liberally for the accomplishment of these regulations.

These regulations establish the procedures by which the Executive Office of Environmental Affairs and all its agencies shall comply with the policy and requirements for equal employment opportunity and affirmative action.

50.10 Construction Projects Conducted by Grantees

(1) Before any applicant receives any financial assistance, including state assisted or federally assisted construction grants awarded under any program administered by an agency, the Secretary must have determined that such applicant is in compliance with the Equal Employment Opportunity Guidelines and Fair Housing Guidelines of the Commission, as they may be amended from time to time (301 CMR 50.18 Appendix 3 and 50.19 Appendix 4 of these regulations) according to the procedures set forth in 301 CMR 50.06 of these regulations.

(2) Every state or state-assisted or federal or federally-assisted contract for public buildings and public works or for goods or services that is let by a grantee shall contain an article prohibiting discriminatory employment practices by contractors, subcontractor, and suppliers of goods or services based on race, color, religion, national origin, ancestry, age or sex. The non-discrimination article shall include a provision requiring contractors and suppliers of goods or services to give written notice of their commitments under this section to any labor union, association or brotherhood with which they have a collective bargaining or other agreement. Such notice shall also be given to the Commission and to SOMBA.

(3) Grantees shall adopt for use in all contracts for construction projects with a dollar value in excess of ten thousand dollars ($10,000.) an adapted version of the Commonwealth of Massachusetts Supplemental Equal Employment Opportunity Anti-Discrimination and Affirmative Action Program (Supplemental Program) (301 CMR 50.17 Appendix 2 of these regulations). Such contract may include minority workforce percentages greater than those required for the geographical locations of the construction project as set forth in the Supplemental Program.

(4) Grantees shall take affirmative steps to increase participation of minority business enterprise (MBEs) in any construction grant.

(5) Prior to the publication of the availability of contracts for construction work to be performed under any construction grant with a total dollar value in excess of ten thousand dollars ($10,000.), the grantee shall notify SOMBA of its intent to solicit bids and shall make available to SOMBA, upon request, copies of the proposal to bid, specifications and plans, and bid invitations.

(6) At the discretion of the Commission there may be established for the life of any construction contract a body to be known as the Liaison Committee, which may be the Executive Office Liaison Committee as established by 301 CMR 50.09 (3) of these regulations. A representative of the grantee shall be a member of the Liaison Committee. The contractor or his agent shall recognize the Liaison Committee as an affirmative action body, and shall establish a continuing working relationship with the Liaison Committee, consulting with the Liaison Committee on all matters related to minority recruitment, referral, employment and training.

(7) Before making the final allocation of funds to any grantee, the Secretary shall review any contracts for construction work to be performed under the grantee, to ascertain the grantee's compliance with the provisions of these regulations.

MINIMUM PERCENTAGES TO BE APPLIED TO STATE AND STATE-ASSISTED CONTRACTS WITHIN THE COMMONWEALTH OF MASSACHUSETTS

The following percentages shall apply	Not Less Than:
Boston:	
Impact Area (Jamaica Plain (part), Mattapan, South Cove, Chinatown, Bay Village, Roxbury, Dorchester, South End.	30%
Others	10%
Cambridge:	12%
New Bedford:	18%
Springfield:	10%
All other cities and towns	10%

ARTICLE 12 BLASTING ORDINANCE IN COUNCIL

DER NO. 236 of 1988

DERED.

May 16, 1988

Be it ordered that Chapter 24 of the Zoning Ordinance of the City of Quincy as amended, be further amended in Art. VIII, by adding a new section 87: Blasting.

Section 87

1. Pre-blast Survey

a. For all permits issued for blasting (rock excavation) in the City of Quincy, a pre-blast survey must be made by the contractor or by an approved firm in this kind of work and satisfactory to the contractor's insurance company.

b. The pre-blast survey will include a survey of the interior and exterior of existing buildings and stone walls adjacent to the project as specified herein, before any excavation or blasting is done. Written approval must be secured from the Fire Chief, City Engineer and Building Inspector serving as the Committee on Blasting.

c. The survey shall record all visible structural defects such as cracks, settlement and lines out of plumb.

d. The survey data shall be recorded in a permanent manner in approved hardbound notebooks. The survey data shall include polaroid photographs showing the building constructions surveyed referenced to the notebook pages. Also a tape recording of all data pertinent to the survey shall be made. The scope and format of the record survey data shall be satisfactory to the Committee on Blasting. Before commencing any blasting or ledge excavation, copies of the survey must be on file at the offices of the Quincy City Engineer, and Quincy City Clerk, City Hall, Quincy, MA.

e. The adjacent area requiring the pre-blasting survey is specified as all buildings and stone walls within a radius of three hundred fifty feet (350) from said blast.

f. Provided, however, that no pre-blasting survey shall be required if blasting is within the following limits: The total charge weight per blast does not exceed five (5) pounds and the maximum weight per delay does not exceed two pounds per delay.

YEAS Cahill, Cheney, Chretien, DeCristofaro, McGrath, Nutley, Phelan, Sheets, Toland

NAYS Cahill, Cheney, Chretien, DeCristofaro, McGrath, Nutley, Phelan, Sheets, Toland

ORDER NO. 236 of 1988

ORDERED:

g. If blasting is designed to excavate more than a ten (10) cubic yard area, the contractor must post a bond with the City of Quincy. The amount of said bond shall be determined by the Committee on Blasting. The Committee on Blasting will not release the bond until it is convinced that all judgments and claims have been reasonably dealt with by the contractor.

h. All blasting is to be supervised on site by an authorized member of the Fire Department, assigned by the Chief, and the cost of said supervision shall be the sole responsibility of the contractor.

i. Any person who shall violate any of the provisions of this ordinance, as determined by the Committee on Blasting, or who fails to comply therewith, shall severally, for each and every violation and noncompliance respectively, be liable to a penalty of two hundred dollars ($200.00) for each offense.

PASSED TO BE ORDAINED OCTOBER 16, 1989

ATTEST

CLERK OF COUNCIL

APPROVED

OCT 23 1989

MAYOR

YEAS Cahill, Cheney, Chretien, DeCristofaro, McGrath, Nutley, Phelan, Sheets, Toland

NAYS Cahill, Cheney, Chretien, DeCristofaro, McGrath, Nutley, Phelan, Sheets, Toland

Equitable adjustment in contract price for differing subsurface or latent physical conditions

If, during the progress of the work, the contractor or the awarding authority discovers that the actual subsurface or latent physical conditions encountered at the site differ substantially or materially from those shown on the plans or indicated in the contract documents either the contractor or the contracting authority may request an equitable adjustment in the contract price of the contract applying to work affected by the differing site conditions. A request for such an adjustment shall be in writing and shall be delivered by the party making such claim to the other party as soon as possible after such conditions are discovered. Upon receipt of such a claim from a contractor, or upon its own initiative, the contracting authority shall make an investigation of such physical conditions; and, if they differ substantially or materially from those shown on the plans or indicated in the contract documents or from those ordinarily encountered and generally recognized as inherent in work of the character provided for in the plans and contract documents and are of such a nature as to cause an increase or decrease in the cost of performance of the work or a change in the construction methods required for the performance of the work which results in an increase or decrease in the cost of the work, the contracting authority shall make an equitable adjustment in the contract price and the contract shall be modified in writing accordingly.

SECTION 00890

PERMITS

PART 1 – GENERAL

1.01 DESCRIPTION:

This Section provides specific information and defines specific requirements of the Contractor regarding the preparation and acquisition of permits required to perform the work of this project.

1.02 RELATED WORK:

A. Section 01110, CONTROL OF WORK AND MATERIALS

B. Section 01550, SIGNAGE (TRAFFIC CONTROL)

C. Section 02300, EARTHWORK

D. Section 02745, PAVING

1.03 GENERAL REQUIREMENTS:

A. The Owner has obtained or will obtain and pay for the permits listed below, which are required for this project. The Contractor shall assist in obtaining certain permits, as indicated. The Contractor shall obtain and pay for all other permits required, as defined under the Permits subsection of Section 00700, GENERAL CONDITIONS.

Permits by Owner	Status
Trench Permit (520 CMR 14.00)(eff. date 3/1/09)	*
City of Quincy Road/Street Opening Permit	*
MWRA waste water 8(m) Permit	Pending

*Contractor shall prepare permit application and obtain the permit after contract is awarded, bearing all expenses.

PART 2 - PRODUCTS

Not Used.

PART 3 – EXECUTION

3.01 PERFORM WORK IN ACCORDANCE WITH REQUIREMENTS:

A. The Contractor shall perform the work in accordance with the Contract Documents, including the attached permits/order of conditions, and any applicable municipal requirements.

B. Prior to commencing any construction activities, the Contractor shall demonstrate to the Owner and the Engineer, through on-site inspection and submitting copies of permits or approvals, that it is in full compliance with the terms and conditions of all permits specified herein. The Contractor shall maintain full compliance with all permits throughout the performance of the work, and upon request, grant access to permitting authorities to inspect the site for the purpose of verifying such compliance.

END OF SECTION

O:\Quincy MA\FY 2016 Water Main Project\Design\Specifications\00890 - Permits.docx

SECTION 01014

SCOPE AND SEQUENCE OF WORK

PART 1 – GENERAL

1.01 WORK INCLUDED:

A. The Contractor shall prepare and submit to the Engineer a computer-generated schedule (print-out) as specified herein for approval within 10 days after the issuance of the Notice to Proceed.

B. Progress under the approved schedule shall be evaluated monthly by the Contractor. The Contractor shall submit to the engineer, with each pay estimate, an evaluation of the status of each activity on which Work has started or is due to start on the approved schedule. The updates will show actual progress to identify those activities started and those completed during the previous period, to show the estimated time required to complete or the percent complete of each activity started but not yet completed and to reflect any changes indicated. Activities shall not be considered complete until they are, in fact, 100 percent complete.

C. The schedule will be adjusted by the Contractor and submitted to the Engineer for approval for any work added, and or, removed from the contract.

D. Should the Contractor wish to change or alter the schedule for any reason, the adjusted schedule must be submitted to the Engineer for approval with an explanation of the change in writing. The Contractor shall not deviate from the original approved schedule until the revised schedule has been approved by the Engineer and the Owner.

1.02 RELATED WORK:

A. SECTION 01110 – CONTROL OF WORK AND MATERIALS

PART 2 - PRODUCTS (NOT APPLICABLE)

PART 3 - EXECUTION

3.01 GENERAL:

A. The Contractor shall be responsible for scheduling its activities and the activities of any subcontractors involved, to meet the completion date, or milestones, established

for the contract. Scheduling of the work shall be coordinated with the Owner and Engineer.

B. The Construction Sequence Requirements shall be used by the Contractor to form a complete schedule for the project, which shall be coordinated with the Owner and Engineer. Prior to performing any work at the site, the Contractor shall submit a detailed computer-generated schedule to the Engineer for review. The schedule shall include: construction activities, the submittal and approval of shop drawings, the procurement of materials and equipment, fabrication of materials and equipment and there delivery, installation and testing.

3.02 COMPUTER-GENERATED SCHEDULE REQUIREMENTS:

A. Each computer-generated schedule submittal shall include a list of activities in numerical order. Each schedule shall include the following minimum items:

1. Activity Numbers
2. Estimated duration
3. Activity description
4. Start date (calendar dated)
5. End date (calendar dated)

B. In addition, each schedule shall be prefaced with the following summary data:

1. Contract name and number
2. Contractor’s name
3. Contract duration
4. Contract schedule
5. The effective or starting date of the schedule.

END OF SECTION

O:\Quincy MA\FY 2016 Water Main Project\Design\Specifications\01014 - Scheduling.docx

SECTION 01110

CONTROL OF WORK AND MATERIALS

PART 1 – GENERAL

Not Used.

PART 2 – PRODUCTS

Not Used

PART 3 - EXECUTION

3.01 HAULING, HANDLING AND STORAGE OF MATERIALS:

A. The Contractor shall, at his own expense, handle and haul all materials furnished by him and shall remove any of his surplus materials at the completion of the work.

B. The Contractor shall provide suitable and adequate storage for equipment and materials furnished by him that are liable to injury and shall be responsible for any loss of or damage to any equipment or materials by theft, breakage, or otherwise.

C. All excavated materials and equipment to be incorporated in the Work shall be placed so as not to injure any part of the Work or existing facilities and so that free access can be had at all times to all parts of the Work and to all public utility installations in the vicinity of the work. Materials and equipment shall be kept neatly piled and compactly stored in such location as will cause a minimum of inconvenience to public travel and adjoining owners, tenants and occupants.

D. The Contractor shall be responsible for all damages to the work under construction during its progress and until final completion and acceptance even though partial payments have been made under the Contract.

3.02 OPEN EXCAVATIONS:

A. All open excavations shall be adequately safeguarded by providing temporary barricades, caution signs, lights and other means to prevent accidents to persons, and damage to property. The Contractor shall, at his own expense, provide suitable and safe means for completely covering all open excavations and for accommodating travel when work is not in progress.

B. Bridges provided for access to private property during construction shall be removed when no longer required.

C. The length of open trench will be controlled by the particular surrounding conditions but shall always be confined to the limits prescribed by the Engineer.

D. If the excavation becomes a hazard, or if it excessively restricts traffic at any point, then special construction procedures shall be taken, such as limiting the length of trench and prohibiting stocking excavated material in the street.

E. All street excavations shall be completely closed at the end of each work day. Backfilling or use of steel plates of adequate strength to carry traffic shall be used.

3.03 MAINTENANCE OF TRAFFIC:

A. Unless permission to close the street is received in writing from the proper authority, all excavated materials and equipment shall be placed so that vehicular and pedestrian traffic may be safely maintained at all times.

B. Should the Chief of Police deem it necessary, uniformed officers will be assigned to direct traffic. The Contractor shall make all arrangements in obtaining uniformed officers required.

C. The Contractor shall at his own expense, as directed by the Police Traffic Control/Safety Officer, provide and erect acceptable barricades, barrier fences, traffic signs, and all other traffic devices not specifically covered in a bid item, to protect the work from traffic, pedestrians, and animals. He shall provide sufficient temporary lighting such as lanterns/flashers (electric battery operated) or other approved illuminated traffic signs and devices to afford adequate protection to the traveling public, at no additional cost to the Owner. See Section 01552 CONSTRUCTION ZONE SAFETY PLAN.

D. The Contractor shall furnish all construction signs that are deemed necessary by and in accordance with Part VI of the Manual on Uniform Traffic Control Devices as published by the U.S. Department of Transportation. In addition, the Contractor may be required to furnish up to 128 square feet of additional special construction warning signs. Size and exact wording of signs shall be determined by the Engineer during construction.

E. The intent of policing is to ensure public safety by direction of traffic. Police officers are not to serve as watchmen to protect the Contractor's equipment and materials.

F. Nothing contained herein shall be construed as relieving the Contractor of any of his responsibilities for protection of persons and property under the terms of the Contract.

3.04 CARE AND PROTECTION OF PROPERTY:

The Contractor shall be responsible for the preservation of all public and private property, and shall use every precaution necessary to prevent damage thereto. If any direct or indirect damage is done to public or private property by or on account of any act, omission, neglect, or misconduct in the execution of the work on the part of the Contractor, such property shall be promptly restored by the Contractor, at his expense,

to a condition similar or equal to that existing before the damage was done, to the satisfaction of the Engineer.

3.05 PROTECTION AND RELOCATION OF EXISTING STRUCTURES AND UTILITIES:

A. All existing buildings, utilities, pipes, poles, wires fences, curbings, property line markers and other structures which the Engineer decides must be preserved in place without being temporarily or permanently relocated, shall be carefully supported and protected from damage by the contractor. Should such property be damaged, it shall be restored by the Contractor, at no additional cost to the Owner.

B. The Contractor shall determine the location of all underground structures and utilities (including existing water services, drain lines, electrical lines, and sewers). Services to buildings shall be maintained, and all costs or charges resulting from damage thereto shall be paid by Contractor.

C. When fences interfere with the Contractor's operations, he shall remove and (unless otherwise specified) promptly restore them in accordance with Section 01564 EXISTING FENCES.

D. On paved surfaces the Contractor shall not use or operate tractors, bulldozers, or other power-operated equipment with treads or wheels which are shaped so as to cut or otherwise damage such surfaces.

E. All property damaged by the Contractor's operations shall be restored to a condition at least equal to that in which it was found immediately before work was begun. Suitable materials and methods shall be used for such restoration.

F. Restoration of existing property and structures shall be carried out as promptly as practicable and shall not be left until the end of the construction period.

3.06 MAINTENANCE OF FLOW:

A. The Contractor shall at his own cost, provide for the flow of sewers and drains interrupted during the progress of the work, and shall immediately cart away and dispose of all offensive matter. The entire procedure of maintaining existing flow shall be fully discussed with the Engineer well in advance of the interruption of any flow.

B. All existing drainage facilities including, but not limited to; brooks, streams, canals, channels, ditches, culverts, catch basins and drainage piping shall be adequately safeguarded so as not to impede drainage or to cause siltation of downstream areas in any manner whatsoever. If the Contractor damages or impairs any of the aforesaid drainage facilities, he shall repair the same within the same day.

C. At the conclusion of the work, the Contractor shall remove all silt in drainage structures caused by his operations as described in Section 01740, CLEANING UP.

3.07 REJECTED MATERIALS AND DEFECTIVE WORK:

A. Materials furnished by the Contractor and condemned by the Engineer as unsuitable or not in conformity with the specifications shall forthwith be removed from the work by the Contractor, and shall not be made use of elsewhere in the work.

B. Any errors, defects or omissions in the execution of the work or in the materials furnished by the Contractor, even though they may have been passed or overlooked or have appeared after the completion of the work, discovered at any time before the final payment is made hereunder, shall be forthwith rectified and made good by and at the expense of the Contractor and in a manner satisfactory to the Engineer.

C. The Contractor shall reimburse the Owner for any expense, losses or damages incurred in consequence of any defect, error, omission or act of the Contractor or his employees, as determined by the Engineer, occurring previous to the final payment.

3.08 SANITARY REGULATIONS:

Sanitary conveniences for the use of all persons employed on the work, properly screened from public observation, shall be provided in sufficient numbers in such manner and at such locations as may be approved. The contents shall be removed and disposed of in a satisfactory manner as the occasion requires. The Contractor shall rigorously prohibit the committing of nuisances within, on or about the work. Any employees found violating these provisions shall be discharged and not again employed on the work without the written consent of the Engineer. The sanitary conveniences specified above shall be the obligation and responsibility of the Contractor.

3.09 SAFETY AND HEALTH REGULATIONS:

This project is subject to the Safety and Health regulations of the U.S. Department of Labor set forth in 29 CFR, Part 1926, and to the Massachusetts Department of Labor and Industries, Division of Industrial Safety "Rules and Regulations for the Prevention of Accidents in Construction Operations (454 CMR 10.0 et. seq.)." Contractors shall be familiar with the requirements of these regulations.

3.10 SITE INVESTIGATION:

The Contractor acknowledges that he has satisfied himself as to the conditions existing at the site of the work, the type of equipment required to perform this work, the quality and quantity of the materials furnished insofar as this information is reasonably ascertainable from an inspection of the site, as well as from information presented by the drawings and specifications made a part of this contract. Any failure of the Contractor to acquaint himself with available information will not relieve him from the responsibility for estimating properly the difficulty or cost of successfully performing the work. The Owner assumes no responsibility for any conclusion or interpretation made by the Contractor on the basis of the information made available by the Owner.

3.11 HAZARDOUS WASTE:

Should the Contractor, while performing work under this contract, uncover hazardous materials, as defined in Massachusetts Hazardous Waste Regulations 310 CMR 30.00, he shall immediately notify the Engineer. The Contractor is not, and has no authority to act as, a handler, generator, operator or disposer of hazardous or toxic substances found or identified at the site, and the Owner shall undertake all such functions.

END OF SECTION

O:\Quincy MA\FY 2016 Water Main Project\Design\Specifications\01110 - Control of Work and Materials.docx

SECTION 01140

SPECIAL PROVISIONS

PART 1 - GENERAL

Not used

PART 2 - PRODUCTS

Not used

PART 3 - EXECUTION

3.01 WATER FOR CONSTRUCTION PURPOSES:

A. In locations where water is in sufficient supply, the Contractor may be allowed to use water without charge for jetting backfill and other construction purposes. The express approval of the Owner shall be obtained before water is used. Waste of water by the Contractor shall be sufficient cause for withdrawing the privilege of unrestricted use.

B. If no water is available, the Contractor shall supply water at no additional cost to the Owner.

3.02 PIPE LOCATION:

Pipe shall be located substantially as indicated on drawings. The Owner reserves the right, acting through the Engineer, to make such modifications as may be deemed desirable to avoid interference with existing structures or for other reasons.

3.03 DIMENSIONS OF EXISTING STRUCTURES:

Where the dimensions and locations of existing structures are of critical importance in the installation or connections of new work, the Contractor shall verify such dimensions and locations in the field before the fabrication of any material or equipment that is dependent on the correctness of such information.

3.04 OCCUPYING PRIVATE PROPERTY:

The Contractor shall not enter upon nor occupy with men, equipment or materials any property outside of the public highways or Owner's easements, except with the written consent of the property owner or property owner's agent.

3.05 EXISTING UTILITY LOCATIONS – CONTRACTOR'S RESPONSIBILITY:

A. The location of existing underground services and utilities shown on the drawings is based on available records. It is not warranted that all existing utilities and services are

shown, or that shown locations are correct. The Contractor shall be responsible for having the utility companies locate their respective utilities on the ground prior to excavating.

B. To satisfy the requirements of Massachusetts law, Chapter 82, Section 40, the Contractor shall, at least 72 hours, exclusive of Saturdays, Sundays and holidays, prior to excavation in the proximity of telephone, gas, cable television and electric utilities, notify the utilities concerned by calling "DIG SAFE" at telephone number: 1-888-344-7233, and MWRA Permitting Department, Field Operations at (617) 305-5956.

C. The Contractor shall coordinate all work involving utilities and shall satisfy himself as to the existing conditions of the areas in which he is to perform his work. He shall conduct and arrange his work so as not to impede or interfere with the work of other contractors working in the same or adjacent areas.

3.06 COORDINATION OF WORK:

The General Contractor shall be responsible for coordinating his own work as well as that of any subcontractors. He shall be responsible for notification of the Engineer when each phase of work is expected to begin and the approximate completion date.

3.07 TIME FOR COMPLETION OF CONTRACT:

The time for completion of this contract is stipulated in the Form of General Bid. The Bidder shall base his bid on completing the proposed work by the completion date stipulated in Section 00300, FORM OF GENERAL BID.

3.08 MAINTENANCE OF TRENCH SURFACE:

After backfilling and compacting the trench, the Contractor shall be responsible for keeping the ground surface dry and passable at all times until the surface has been restored to original conditions.

3.09 COMPLIANCE WITH PERMITS:

A. The Contractor shall perform all work in conformance with requirements of the Permits, which appear in Section 00890 – PERMITS.

3.11 CONNECTIONS TO EXISTING WATER SYSTEMS:

A. The Owner will, upon 72-hour notice from the Contractor, assist the Contractor by locating and opening or closing any and all valves required for draining or admitting water to the various sections of the water main as required to perform the proposed work. No damages shall be claimed by the Contractor for delays in dewatering pipelines nor shall any damages be claimed because of water leaking through closed valves after dewatering is completed.

B. Connections to the existing distribution system shall be made with the mains under pressure unless the lines can be temporarily taken out of service as approved by the Owner.

C. The Contractor will be required to make test excavations to ascertain that the proposed position of the connections will be clear of joints, fittings, or other obstructions.

D. If any failure occurs in connection to existing mains, service shall be restored in the shortest possible time, the Contractor working around the clock, if necessary. He shall cooperate with the Owner in notifying the consumers or supplying emergency water. If required by Owner, the Contractor shall make connections to water mains during night hours, on Sunday or at other times of off-peak demand for water.

3.12 PROTECTION OF WATER RESOURCE AREAS:

The Contractor shall take extra precautions to ensure that no pollutants enter the drainage system or the groundwater table from the construction area. The Contractor shall not store fuels or other hazardous materials or potential contaminants on the construction site. In the event of a spill, the Contractor shall immediately notify the Engineer.

3.13 CONTRACTOR'S REPRESENTATIVE:

The Contractor shall designate a representative who will be available to respond to emergency calls by the Owner at any time day and night and on weekends and holidays should such a situation arise.

3.14 VISUAL RECORDING:

Before beginning construction, the Contractor shall make a color DVD recording along the entire work length. One complete recording, for the entire project length, shall be furnished to the Engineer prior to the start of the work. The visual recording shall be identified by street name, as applicable, and station.

3.15 HOURS OF CONSTRUCTION ACTIVITY:

A. The Contractor shall conduct all day construction activity between 7:30 a.m. and 5:00 p.m., Monday through Friday, with the exception of Sea Street in which construction activity will be restricted to 9:00 a.m. and 4:00 p.m. No construction work shall be allowed on Saturdays, Sundays or Holidays without written authorization from the Owner.

B. The Owner will provide personnel for assistance in locating and operating valves at no cost to the Contractor during the Owner's normal working hours (Monday through Friday 7:00 a.m. to 3:00 p.m.). When this assistance is required by the Contractor outside of the Owner's normal working hours the cost will be incurred by the

Contractor at the prevailing overtime rate of pay for the personnel providing the assistance. The Owner will bill the Contractor directly.

3.16 CONSTRUCTION CREWS:

The Contractor shall not increase the number of construction crews assigned to the work without providing one-week advance notice to the Engineer.

3.17 MASSACHUSETTS DATA SECURITY REGULATIONS:

The Contractor is required to comply with data security regulations contained in 201 CMR 17.00 that have been established to safeguard personal information of Massachusetts residents contained in paper or electronic records. The Contractor shall not submit to the Engineer or Owner documents in paper or electronic form that contain personal information (person's name combined with one or more of the following – Social Security Number, driver's license number or state-issued identification card number, financial institution account number, or credit or debit card number). Any document submitted to the Engineer that violates this provision shall be returned to the Contractor and the Contractor shall remove personal information from the document prior to resubmitting it to the Engineer. The Contractor shall require each Subcontractor to also comply with the MA data security regulations insofar as they involve submittal of personal information to the Engineer and Owner.

3.18 UTILITY REBATES:

The Owner shall apply for and be issued utility rebates available for this Project. The Owner shall not pay any rebate money to the Contractor.

END OF SECTION

O:\Quincy MA\FY 2016 Water Main Project\Design\Specifications\01140 - Special Provisions.docx

SECTION 01250

PRICE ADJUSTMENTS

PART 1 - GENERAL

1.01 WORK INCLUDED:

A. Price adjustments, as required by MGL Chapter 30, Section 38A, shall be implemented for this Project. Price adjustments, as enumerated in Part 3 of this specification, shall be made for the following items:

Water and Sewer Projects

- Diesel fuel and gasoline
- Liquid asphalt

B. Price adjustments shall be made in accordance with the methodology adopted by the Massachusetts Department of Transportation in the following SPECIAL PROVISIONS documents, which are attached, but modified as contained herein:

1. Document 00811 Monthly Price Adjustment for Hot Mix Asphalt Mixtures, revised February 2, 2009
2. Document 00812 Monthly Price Adjustment for Diesel fuel and Gasoline, revised January 26, 2009
3. Document 00813 Price Adjustments for Structural Steel and Reinforcing Steel for Contracts Bid on or After April 5, 2011, dated May 11, 2011
4. Document 00814 Price Adjustments for Portland Cement concrete Mixes, dated January 12, 2009

C. Base and Period Prices used to calculate price adjustments shall be as published by the Massachusetts Department of Transportation as presented in Documents 00811 through 00814.

1.02 CONTRACTOR CREDIT TO OWNER SHOULD PRICES DECREASE:

A. Price adjustments will only be made if the variance between the base price and the period price is Five Percent (5%) or more.

B. In the instance where the period price is below the base price by 5% or more, then the Contractor shall credit the Owner the adjustment.

PART 2 - PRODUCTS

Not used

PART 3 - EXECUTION

3.01 DIESEL FUEL AND GASOLINE:

A. Price adjustments shall be determined based on documented quantities of diesel fuel and gasoline usage for site dedicated equipment. This methodology shall replace the price adjustment basis on fuel usage factors, as described within the Massachusetts Department of Transportation Document 00812.

B. All site dedicated equipment shall be approved by the Engineer for the calculation of any qualifying price adjustment. Prior to the start of work the Contractor shall submit to the Engineer a list of all dedicated equipment for the project. The Contractor shall forward updated submittals, as necessary, throughout the duration of the contract. Only that equipment included within the current approved list shall be considered eligible for calculating a price adjustment under this Section 01250.

C. The Contractor shall submit fuel delivery slips to the Engineer as a basis for calculating total diesel fuel and gasoline usage for site dedicated equipment. At a minimum, the delivery slips will include the name of the fuel delivery company, the date and location of fueling, the type of fuel, description of the fueled equipment and the quantity for each type of fuel delivered in gallons. Any slips not providing the minimum information shall not be included in the calculation of total diesel fuel and gasoline usage for price adjustment purposes.

3.02 LIQUID ASPHALT:

A. The “New Asphalt Period Price Method” shall be used to determine price adjustments.

B. For bid items involving asphalt paving that are measured and paid on a linear foot basis, or some other basis besides tonnage, the number of tons shall be determined by the Engineer using compacted measure of thickness within the established payment limits.

END OF SECTION

O:\Quincy MA\FY 2016 Water Main Project\Design\Specifications\01250 Price Adjustments.docx

DOCUMENT 00811
SPECIAL PROVISIONS
MONTHLY PRICE ADJUSTMENT FOR HOT MIX ASPHALT (HMA) MIXTURES
ENGLISH UNITS
Revised: 02/02/2009

This provision applies to all projects using greater than 100 tons of hot mix asphalt (HMA) mixtures containing liquid asphalt cement as stipulated in the Notice to Contractors section of the bid documents.

The Price Adjustment will be based on the variance in price for the liquid asphalt component only from the Base Price to the Period Price. It shall not include transportation or other charges. This Price Adjustment will occur on a monthly basis.

Base Price
The Base Price of liquid asphalt on a project as listed in the Notice to Contractors section of the bid documents is a fixed price determined at the time of bid by the Department by using the same method as for the determination of the Period Price detailed below.

Period Price
Please note that, starting December 15, 2008, two sets of period prices will be posted each month on the MassHighway website at http://www.mhd.state.ma.us/. They will be labeled "New Asphalt Period Price Method" and "Old Asphalt Period Price Method".

New Asphalt Period Price Method
The "New Asphalt Period Price Method" is for contracts bid after December 15, 2008 and will show the Period Price of liquid asphalt for each monthly period as determined by MassHighway using the average selling price per standard ton of PG64-28 paving grade (primary binder classification) asphalt, FOB manufacturer's terminal, as listed under the "East Coast Market - New England, Boston, Massachusetts area" section of the Poten & Partners, Inc. "Asphalt Weekly Monitor". This average selling price is listed in the issue having a publication date of the second Friday of the month and will be posted as the Period Price for that month. MassHighway will post this Period Price on this website within two (2) business days following their receipt of the relevant issue of the "Asphalt Weekly Monitor". Poten and Partners has granted MassHighway the right to publish this specific asphalt price information sourced from the Asphalt Weekly Monitor.

Old Asphalt Period Price Method
The "Old Asphalt Period Price Method" Period Price will be for contracts bid on or before December 15, 2008 and will contain liquid asphalt prices as determined by the old or previous method. These prices will continue to be posted on MassHighway's website until all contracts using the "Old Asphalt Period Price Method" Period Price have been closed.

New and Old Asphalt Period Price Methods
The paragraphs below apply to both the New and the Old Asphalt Period Price Methods.

The Contract Price of the hot mix asphalt mixture will be paid under the respective item in the Contract. The price adjustment, as herein provided, upwards or downwards, will be made after the work has been performed, using the monthly period price for the month during which the work was performed.

The Price Adjustment applies only to the actual virgin liquid asphalt content in the mixture placed on the job in accordance with the Standard Specifications for Highways and Bridges, Division III, Section M3.11.03.

The Price Adjustment will be a separate payment item. It will be determined by multiplying the number of tons of hot mix asphalt mixtures placed during each monthly period times the liquid asphalt content percentage times the variance in price between Base Price and Period Price of liquid asphalt.

This Price Adjustment will be paid only if the variance from the Base Price is 5% or more for a monthly period. The complete adjustment will be paid in all cases with no deduction of the 5% from either upward or downward adjustments.

No Price Adjustment will be allowed beyond the Completion Date of this Contract, unless there is a Department-approved extension of time.

******** END OF DOCUMENT ********

DOCUMENT 00812

SPECIAL PROVISIONS
MONTHLY PRICE ADJUSTMENT FOR DIESEL FUEL AND GASOLINE –
ENGLISH UNITS

Revised: 01/26/2009

This monthly fuel price adjustment is inserted in this contract because the national and worldwide energy situation has made the future cost of fuel unpredictable. This adjustment will provide for either additional compensation to the Contractor or repayment to the Commonwealth, depending on an increase or decrease in the average price of diesel fuel or gasoline.

This adjustment will be based on fuel usage factors for various items of work developed by the Highway Research Board in Circular 158, dated July 1974. These factors will be multiplied by the quantities of work done in each item during each monthly period and further multiplied by the variance in price from the Base Price to the Period Price.

The Base Price of Diesel Fuel and Gasoline will be the price as indicated in the Department's web site (www.mhd.state.ma.us) for the month in which the contract was bid, which includes State Tax.

The Period Price will be the average of prices charged to the State, including State Tax for the bulk purchases made during each month.

This adjustment will be effected only if the variance from the Base Price is 5% or more for a monthly period. The complete adjustment will be paid in all cases with no deduction of the 5% from either upward or downward adjustments.

No adjustment will be paid for work done beyond the extended completion date of any contract.

Any adjustment (increase or decrease) to estimated quantities made to each item at the time of final payment will have the fuel price adjustment figured at the average period price for the entire term of the project for the difference of quantity.

The fuel price adjustment will apply only to the following items of work at the fuel factors shown:

ITEMS COVERED	**FUEL FACTORS**	
	Diesel	**Gasoline**
Excavation: and Borrow Work: Items 120, 120.1, 121, 123, 124, 125, 127, 129.3, 140, 140.1, 141, 142, 143, 144., 150, 150.1, 151 and 151.1 (Both Factors used)	0.29 Gallons / CY.	0.15 Gallons / CY
Surfacing Work: All Items containing Hot Mix Asphalt	2.90 Gallons / Ton	Does Not Apply

******** END OF DOCUMENT ********

MassDOT Highway Division

DOCUMENT 00813

SPECIAL PROVISIONS

PRICE ADJUSTMENTS FOR STRUCTURAL STEEL AND REINFORCING STEEL

FOR CONTRACTS BID ON OR AFTER APRIL 5, 2011

ENGLISH UNITS

May 11, 2011

This provision applies to projects containing a price adjustment for structural steel and reinforcing steel as stipulated in the Notice to Contractors section of the Bid Documents. It applies to all structural steel as defined below and all reinforcing steel on the project. Compliance with this provision is mandatory, i.e., there are no "opt-in" or "opt-out" clauses. Price adjustments will be handled as described below and shall only apply to unfabricated structural steel material, consisting of rolled shapes, plate steel, sheet piling, pipe piles, steel castings and steel forgings, and unfabricated reinforcing steel bars.

Price adjustments will be variances between Base Prices and Period Prices. Base Prices and Period Prices are defined below.

Price adjustments will only be made if the variances between Base Prices and Period Prices are 5% or more. A variance can result in the Period Price being either higher or lower than the Base Price. Once the 5% threshold has been achieved, the adjustment will apply to the full variance between the Base Price and the Period Price.

Price adjustments will be calculated by multiplying the number of pounds of unfabricated structural steel material or unfabricated reinforcing steel bars subject to a price adjustment by the index factor calculated as shown below under Example of a Period Price Calculation.

Price adjustments will *not* include the costs of shop drawing preparation, handling, fabrication, coatings, transportation, storage, installation, profit, overhead, fuel costs, fuel surcharges, or other such charges not related to the cost of the unfabricated structural steel and unfabricated reinforcing steel.

The weight of steel subject to a price adjustment shall not exceed the final shipping weight of the fabricated part by more than 10%.

Base Prices and Period Prices are defined as follows:

Base Prices of unfabricated structural steel and unfabricated reinforcing steel on a project are fixed prices determined by the Department and found in the Notice to Contractors section of the Bid Documents.

The Base Price Date is the month and year in which MassDOT opened bids for the project. This date is used to select the Base Price Index.

Period Prices of unfabricated structural steel and unfabricated reinforcing steel on a project are variable prices calculated based on the purchase date of the steel (Period Price Date) using an index of steel prices to adjust the Base Price.

The Period Price Date is the date the steel was delivered to the fabricator as evidenced by an official bill of lading submitted to the Department containing a description of the shipped materials, weights of the shipped materials and the date of shipment. This date is used to select the Period Price Index.

The index used for the calculation of Period Prices is the U.S. Bureau of Labor Statistics (BLS) Producer Price Index (PPI) Series ID WPU101702 (Not Seasonally Adjusted, Group: Metals and Metal Products, Item: Semi-finished Steel Mill Products.) As this index is subject to revision for a period of up to four (4) months after its original publication, no price adjustments will be made until the index for the period is finalized, i.e., the index is no longer suffixed with a "(P)".

Period Prices are determined as follows:

Period Price = Base Price X Index Factor
Index Factor = Period Price Index / Base Price Index

Example of a Period Price Calculation:

Calculate the Period Price for December 2009 using a Base Price from March 2009 of $0.82/Pound for 1,000 Pounds of ASTM A709 (AASHTO M270) Grade A36 Structural Steel Plate.

The Period Price Date is December 2009. From the PPI website*, the Period Price Index = 218.0.

The Base Price Date is March 2009. From the PPI website*, the Base Price Index = 229.4.

Index Factor = Period Price Index / Base Price Index = 218.0 / 229.4 = 0.950
Period Price = Base Price X Index Factor = $0.82/Pound X 0.950 = $0.78/Pound

Since $0.82 - $0.78 = $0.04 is less than 5% of $0.82, no price adjustment is required.

If the $0.04 difference shown above was greater than 5% of the Base Price, then the price adjustment would be 1,000 Pounds X $0.04/Pound = $40.00. Since the Period Price of $0.78/Pound is less than the Base Price of $0.82/Pound, indicating a drop in the price of steel between the bid and the delivery of material, a credit of $40.00 would be owed to MassDOT. When the Period Price is higher than the Base Price, the price adjustment is owed to the Contractor.

* To access the PPI website and obtain a Base Price Index or a Period Price Index, go to http://www.bls.gov/PPI/

END OF EXAMPLE.

The Contractor will be paid for unfabricated structural steel and unfabricated reinforcing steel under the respective contract pay items for all components constructed of either structural steel or reinforced Portland cement concrete under their respective Contract Pay Items.

Price adjustments, as herein provided for, will be paid separately as follows:

<u>Structural Steel</u>
Pay Item Number 999.449 for positive (+) pay adjustments (payments to the Contractor)

Pay Item Number 999.457 for negative (-) pay adjustments (credits to MassDOT Highway Division)

<u>Reinforcing Steel</u>
Pay Item Number 999.466 for positive (+) pay adjustments (payments to the Contractor)

Pay Item Number 999.467 for negative (-) pay adjustments (credits to MassDOT Highway Division)

No price adjustment will be made for price changes after the Contract Completion Date, unless the MassDOT Highway Division has approved an extension of Contract Time for the Contract.

****

END OF DOCUMENT

DOCUMENT 00814

SPECIAL PROVISIONS
PRICE ADJUSTMENT FOR PORTLAND CEMENT CONCRETE MIXES

January 12, 2009

This provision applies to all projects using greater than 100 Cubic Yards (76 Cubic Meters) of Portland cement concrete containing Portland cement as stipulated in the Notice to Contractors section of the Bid Documents. This Price Adjustment will occur on a monthly basis.

The Price Adjustment will be based on the variance in price for the Portland cement component only from the Base Price to the Period Price. It shall not include transportation or other charges.

The Base Price of Portland cement on a project is a fixed price determined at the time of bid by the Department by using the same method as for the determination of the Period Price (see below) and found in the Notice to Contractors.

The Period Price of Portland cement will be determined by using the latest published price, in dollars per ton (U.S.), for Portland cement (Type I) quoted for Boston, U.S.A. in the **Construction Economics** section of *ENR Engineering News-Record* magazine or at the ENR website http://www.enr.com under **Construction Economics**. The Period Price will be posted on the MassHighway website the Wednesday immediately following the publishing of the monthly price in ENR, which is normally the first week of the month.

The Contract Price of the Portland cement concrete mix will be paid under the respective item in the Contract. The price adjustment, as herein provided, upwards or downwards, will be made after the work has been performed, using the monthly period price for the month during which the work was performed.

The price adjustment applies only to the actual Portland cement content in the mix placed on the job in accordance with the Standard Specifications for Highways and Bridges, Division III, Section M4.02.01. No adjustments will be made for any cement replacement materials such as fly ash or ground granulated blast furnace slag.

The Price Adjustment will be a separate payment item. It will be determined by multiplying the number of cubic yards of Portland cement concrete placed during each monthly period times the Portland cement content percentage times the variance in price between the Base Price and Period Price of Portland cement.

This Price Adjustment will be paid only if the variance from the Base Price is 5% or more for a monthly period. The complete adjustment will be paid in all cases with no deduction of the 5% from either upward or downward adjustments.

No Price Adjustment will be allowed beyond the Completion Date of this Contract, unless there is a Department-approved extension of time.

****
*

END OF DOCUMENT

SECTION 01270

MEASUREMENT AND PAYMENT

PART 1 - DESCRIPTION

1.01 GENERAL:

A. The following subsections describe the measurement of and payment for the work to be done under the items listed in Section 00300, FORM OF GENERAL BID.

B. All work performed as described in these contract documents shall be paid for under one or more of the items listed in Section 00300, FORM OF GENERAL BID. All other activities required in connection with performance of the work, including all work required under Division 1, GENERAL REQUIREMENTS, whether described in the contract documents or mandated by applicable codes, permits and laws, will not be separately paid for unless specifically provided for in the FORM OF GENERAL BID, but will be considered incidental to performance of the overall project.

C. Each unit or lump sum price stated in the Section 00300, FORM OF GENERAL BID shall constitute full compensation as herein specified for each item of work completed in accordance with the drawings and specifications.

D. The payment items listed herein and in Section 00300, FORM OF GENERAL BID are intended to provide full payment for the work shown on the drawings and specified herein. Any work called for or implied in the documents but not listed as a payment item shall be considered incidental to the overall project.

E. Unless otherwise noted, all earthwork shall be included under any item requiring excavation. Unless otherwise noted, each item specified or shown on the drawings shall be furnished and installed in accordance with the technical section whether a specific applicable payment item exists or not.

F. The prices for those items which involve excavation shall include compensation for disposal of surplus excavated material, and installation of all necessary sheeting and bracing.

G. In all items involving excavation, the price shall be based on doing the entire excavation in earth. Where rock is excavated, the price therefor shall be in addition to the cost of excavating the earth, and no deduction shall be made in the amount for earth excavation.

H. The price for all pipe items for water mains and fittings, hydrants and valves, and service connections shall constitute full compensation for earth excavation, sheeting, dewatering, bedding, furnishing, laying, jointing, testing pipe, tracer tape (if required), backfilling, sidewalk replacement, curbing replacement, loaming and seeding, and cleaning up.

1.02 WATER MAINS AND FITTINGS:

A. Water mains, including all fittings noted on plans, compacted select backfill (as shown in the water main trench detail), couplings, joint and thrust restraints, and concrete backing, shall be measured per linear foot of water main installed, and shall be paid at the contract unit prices under the subdivisions of the item "Water Mains and Fittings."

B. Measurement shall not include valves. The laying length of all valves shall be taken as 12 inches and, for each valve; this length shall be subtracted from the length of pipe measured.

C. Additional fittings required but not noted on the contract drawings shall be measured per pound and paid under the item "Additional Fittings." The weight of fittings up through 64-inch size shall be measured as compact ductile iron fittings (body weight only).

D. All fittings used to provide clearance beneath existing utilities or hydrant laterals, which are not shown or noted on the contract drawings, shall be measured and paid for under the item, “Additional Fittings”.

E. Ten percent of the payment for the subdivisions of the item "Water Mains and Fittings" shall be withheld until the pipeline has satisfactorily passed the pressure test and disinfection requirements.

F. The cost of making connections to existing water mains shall be considered incidental to the project.

1.03 PIPE INSULATION:

A. Insulation for underground pipelines shall be measured per linear foot of insulation furnished and installed and shall be paid at the contract unit price under the subdivisions of the item "Pipe Insulation."

1.04 POLYETHYLENE ENCASEMENT:

A. Polyethylene encasement for underground pipelines shall be measured for payment per linear foot of polyethylene encasement furnished and installed and shall be paid at the contract unit price under the item “Polyethylene Encasement.”

1.05 TEMPORARY WATER SERVICE PIPING:

A. Temporary water service piping shall be measured per linear foot completed as shown on the plans or as required by the Engineer and shall be paid at the contract unit price under the subdivisions of the item "Temporary Service Piping." Payment shall include paving, cutting trenches for road crossings, driveway crossings, connections to existing water mains and services, reconnection of existing services, temporary hydrants and

valves, disinfection of temporary water service pipe, providing any tools requested by the local Fire Department for the operation of temporary hydrants and all incidental work associated with installing and maintaining temporary water main for the duration of the project.

B. Individual above ground connections to houses or buildings shall not be separately measured for payment, but shall be considered incidental to the installation of the temporary water service piping.

C. Measurement for payment of temporary service piping shall stop at a distance of 40 feet from the last building on terminal pipe runs.

D. Individual temporary water service pipe connections to underground domestic services shall be measured per connection to underground service and paid under the item “Underground Connections to Temporary Water Main”. Payment shall include excavation, excavation support, cutting into the existing service, connecting temporary service pipe to the connection, backfill, plating of the excavation for the duration of construction and all appurtenant work associated with connecting temporary service pipe to the building service.

1.06 HYDRANTS AND VALVES:

A. Hydrants shall be measured per hydrant installed, relocated or removed. Tapping sleeves and valves shall be measured per set installed. Valves shall be measured per valve installed.

B. Hydrants, tapping sleeve and valve sets, valves, and insertion valves shall be paid at the contract price under the subdivisions of the item "Hydrants and Valves."

C. The cost of making connections to existing mains, and the cost of joint restraints, couplings and concrete backing shall be considered incidental to the cost of the project.

D. The cost of providing valve boxes shall be considered incidental to the project.

E. The cost of removing abandoned valves and/or valve boxes shall be considered incidental to the project.

1.07 SERVICE CONNECTIONS:

A. Service piping, including couplings, shall be measured per linear foot completed.

B. Corporation stops, including saddles if required, shall be measured per unit completed.

C. Curb stops, including curb boxes and couplings, if required, shall be measured per unit completed.

D. Payment shall be made at the contract unit prices under the subdivisions of the item

"Service Connections."

E. Payment shall include curb replacement, sidewalk replacement, temporary and/or permanent paving and/or loaming and seeding as required over the service connection.

1.08 SEWER AND DRAIN RECONSTRUCTION:

A. Reconstruction of sewers and drains shall be measured per sewer or drain reconstructed and shall be paid at the contract unit price under the item "Sewer and Drain Reconstruction."

B. Only pipe which is not shown on the drawings nor located for the Contractor in the field shall be considered for payment.

C. Pipes damaged by the Contractor which pass below the proposed pipeline or are outside the specified trench limits shall be repaired by the Contractor at no cost to the Owner.

1.09 ROCK EXCAVATION AND DISPOSAL:

A. Rock excavated and disposed of off-site by the Contractor shall be measured by the cubic yard, within the payment limits as defined in the water trench detail or as defined in Paragraph G below. The unit price established by the Engineer under part (1) of the bid item is the minimum unit price to be used for rock excavation. The unit price to be inserted by the Contractor in his bid under part (2) of the bid item is intended to reflect the Contractor’s additional costs for performing the rock excavation and disposal, should he decide that the minimum unit price in part (1) is insufficient compensation.

B. Payment for this item includes rock excavation and disposal; furnishing and installing gravel borrow in its place, and providing all required documentation.

C. Only boulders and concrete structures greater than one cubic yard shall be included for measurement and payment.

D. Where rock is encountered, it shall be uncovered but not excavated until the Engineer has made measurements, unless, in the opinion of the Engineer, satisfactory measurements can be made in some other manner.

E. The bidder shall include in the bid for items involving excavation, the cost of doing the entire excavation as earth. The price for the Item "Rock Excavation and Disposal" is intended to cover the difference between the cost of rock excavation and the cost of earth excavation.

F. The cost of pre-blast surveys, vibration air blast monitoring, blasting records and post-blast inspection shall be considered incidental to the cost of rock excavation and disposal and will not be separately paid.

G. When two or more pipes are installed parallel to one another and the trench payment

limits overlap, rock excavation in the overlap section will only be paid once.

1.10 EARTHWORK:

A. Unless designated otherwise, earthwork shall not be separately measured for payment, but shall be considered incidental to construction of the project.

B. EXCAVATION AND BACKFILL OF UNSUITABLE MATERIAL ABOVE NORMAL GRADE:

1. If, in the opinion of the Engineer, the material at or above normal grade is unsuitable for use as backfill, it shall be removed and disposed of to such depths and widths within the limits of payment as ordered by the Engineer. Normal grade is defined as the elevation of the trench bottom, as shown on the drawings.

2. The quantity of earth excavation and backfill of unsuitable material above normal grade to be included for payment shall be the number of cubic yards of unsuitable material ordered to be removed and measured by the Engineer within the trench payment limit shown on the contract drawings, excluding quantities paid under other items.

3. Topsoil, paving materials, frozen material or ledge excavation above the normal grade of the trench excavation will not be considered for payment.

4. The unit price for this item shall constitute full compensation for excavation of unsuitable material above normal grade and disposal of unsuitable material, excluding materials noted above, and furnishing, installing and compacting approved backfill materials as specified in the Contract Documents

5. Payment shall be made at the contract unit price of the item “Unsuitable Material Above Normal Grade.” The unit price established by the Engineer under Part (1) of the Bid Item Number is the minimum unit price to be used for unsuitable material above normal grade. The unit price to be inserted by the Contractor in his bid under Part (2) of the Bid Item Number is intended to reflect the Contractor’s additional costs for performing the excavation and backfill of unsuitable material above normal grade, should he decide that the minimum unit price in Part (1) of the Bid Item Number is insufficient compensation.

6. The Contractor will not be reimbursed for excavation of unsuitable material above normal grade, which has not been ordered by the Engineer.

C. EXCAVATION AND BACKFILL OF UNSUITABLE MATERIAL BELOW NORMAL GRADE:

1. If, in the opinion of the Engineer, the material at or below normal grade is unsuitable for use as foundation, it shall be removed and disposed of to such depths and within the limits of payment. Normal grade is defined as the elevation

of the proposed pipeline trench bottom, as indicated on the drawings.

2. The quantity of earth excavation and backfill below normal grade to be included for payment shall be the number of cubic yards of unsuitable material ordered to be removed and measured by the Engineer within the trench payment limit as indicated on the contract drawings.

3. The unit price for excavation and backfill of unsuitable material below normal grade shall constitute full compensation for excavation of unsuitable material below normal grade, disposal of unsuitable material, and furnishing, installing and compacting approved backfill materials as specified in Section 02300 of the Contract Documents.

4. Payment shall be made at the contract unit price of the item "Unsuitable Material Below Normal Grade." The unit price established by the Engineer under Part (1) of the Bid Item Number is the minimum unit price to be used for unsuitable material below normal grade. The unit price to be inserted by the Contractor in his bid under Part (2) of the Bid Item Number is intended to reflect the Contractor's additional costs for performing the excavation and backfill of unsuitable material below normal grade, should he decide that the minimum unit price in Part (1) of the Bid Item Number is insufficient compensation.

5. The Contractor will not be reimbursed for excavation of unsuitable material below grade, which has not been ordered by Engineer. The Contractor shall backfill and compact any such over-excavated areas in accordance with the specifications, at no additional cost to the Owner.

D. ADDITIONAL EARTHWORK BELOW NORMAL GRADE:

Additional earthwork necessary to lower the pipeline below the grade indicated on the drawings, if ordered by the Engineer, shall be measured per cubic yard and paid at the contract unit price under the Item "Additional Earthwork Below Normal Grade." Payment shall cover both earth excavation and backfill with excavated material. Payment for the removal, disposal, and replacement of unsuitable material shall be in accordance with Paragraphs B and C above.

E. TEST PITS:

1. Test pits as shown or as ordered by the Engineer and not incidental to construction shall be measured per cubic yard excavated and backfilled under the Item "Test Pits."

2. Test pits shall be paid at the contract unit price under the item "Test Pits." The unit price under this item shall constitute full compensation for all excavation, backfill, pavement repair, surface restoration, or other work incidental to excavation or restoration of test pits. The unit price established by the Engineer under part (1) of the bid item is the minimum unit price to be used for test pits.

The unit price to be inserted by the Contractor in his bid under part (2) is intended to reflect the Contractor's additional costs for performing the test pit, should he decide that the minimum unit price in part (1) of the bid item is insufficient compensation.

1.11 PAVEMENT REPLACEMENT:

A. Bituminous pavement shall be measured per linear foot, square yard or ton of pavement completed, and shall be paid at the contract unit prices under the subdivisions of the item "Pavement Replacement" as further described below.

B. Pavement disturbed by the Contractor's operations outside payment limit as defined in the water trench detail shall not be paid under these items, but shall be repaired to its original condition by the Contractor at no cost to the Owner

C. Payment for Temporary Trench Pavement shall include furnishing, preparation, and installation of compacted gravel borrow sub base, binder course pavement, and tack coat, as specified in the drawings. Maintenance and repair of temporary trench pavement shall also be included.

D. Payment for Permanent Trench Pavement items shall include cutbacks, removal and disposal of temporary pavement and existing pavement for cutbacks, and furnishing and installing permanent binder course pavement, permanent top course pavement, tack coat, and joint sealant, as shown on the drawings and as specified.

E. Temporary and/or permanent pavement required over building service connections shall not be separately measured for payment, but shall be considered incidental to construction of the building service connection.

F. Pavement measured per linear foot shall be measured based on a horizontal projection to grade of the centerline of the completed pipeline(s) trench.

G. Raising and adjusting castings and valve boxes shall not be measured separately for payment but shall be considered incidental to the project.

1.12 SUPPORT OF EXCAVATION:

A. Unless otherwise indicated, the work of this section shall not be separately measured for payment, but shall be considered incidental to the project.

B. No payment shall be made under this item for trench boxes, sheeting or steel plates used at the Contractor's option in the course of the work.

1.13 SIDEWALK REPLACEMENT:

A. Unless otherwise indicated, sidewalk replacement above the main pipeline shall not be paid separately measured for payment, but shall be considered incidental to the project.

B. Sidewalk replacement required above building service connections shall not be separately measured for payment, but shall be considered incidental to construction of the building service connection.

1.14 LOAMING AND SEEDING:

A. Loaming and seeding required above the main pipeline shall not be separately measured for payment but shall be considered incidental to the installation of water main and fittings.

B. Loaming and seeding required above building service connections shall not be separately measured for payment, but shall be considered incidental to construction of the building service connection.

1.15 DUST CONTROL (CALCIUM CHLORIDE):

A. The work of this section shall be measured per pound of calcium chloride applied as ordered by the Engineer and shall be paid under the item "Calcium Chloride."

1.16 ENVIRONMENTAL PROTECTION:

A. Unless otherwise indicated, the work of this section shall not be separately measured for payment, but shall be considered incidental to the project.

B. Catch basin protection shall be measured per catch basin protected and shall be paid at the contract unit price under the item "Catch Basin Protection."

1.17 TRAFFIC DETAIL OFFICERS:

A. The services of uniformed officers shall be measured per hour worked and paid at the contract unit prices under the subdivisions of the item "Traffic Detail Officers." The unit prices under this item include administration charges required by the police.

B. The set prices for Uniformed Officers are based on the prevailing hourly wage rates. Payment will be made based on invoices submitted by the traffic authority to the Contractor. The Contractor shall forward copies of these invoices to the Engineer and include the cost in his Application for Payment. The Contractor shall make actual payment to the traffic authority and the Contractor shall be reimbursed by the Owner through the payment estimate. If police wages change during the course of the Contract, the unit prices under this item will be changed accordingly.

1.18 DEWATERING:

A. Unless otherwise indicated, the work of this section shall not be separately measured for payment, but shall be considered incidental to the project

1.19 SIGNAGE:

A. Unless otherwise indicated, the work of this section shall not be separately measured for payment, but shall be considered incidental to the project.

B. Trailer-mounted electronic message sign shall be measured per calendar day in-use and shall be paid at the contract unit price under the item "Trailer-Mounted Changeable Message Sign." Work shall include all fuel, configuration, operational, and appurtenant and expenses.

1.20 CURBING REPLACEMENT:

A. Unless otherwise indicated, the work of this section shall not be separately measured for payment, but shall be considered incidental to the project.

1.21 CONNECTIONS TO EXISTING MAINS:

A. Unless otherwise indicated, the work of this section shall not be separately measured for payment, but shall be considered incidental to the project.

1.22 ABANDONMENT OF EXISTING MAINS:

A. Unless otherwise indicated, the work of this section, including plugs, caps, concrete backing, or removal of valves and valve boxes as required, shall not be separately measured for payment, but shall be considered incidental to the project.

1.23 FIELD CONCRETE:

A. Unless otherwise indicated, the work of this section shall not be separately measured for payment, but shall be considered incidental to the project.

1.24 PROTECTION AND RELOCATION OF EXISTING STRUCTURES AND UTILITIES:

A. Unless otherwise indicated, protection or temporary removal and replacement of existing utilities and structures as described in Section 01110 shall not be separately measured for payment, but shall be considered incidental to the project.

1.25 PRICE ADJUSTMENTS MANDATED BY MGL CHAPTER 30, SECTION 38A

A. Price adjustments for certain payment items shall be as described in Specification Section 01250 PRICE ADJUSTMENTS. Payment shall be made at the unit prices included in Section 00300 or, if no such items are contained in Section 00300, by change order.

1.26 PAVEMENT MARKINGS:

A. Pavement markings shall not be separately measured for payment but shall be considered incidental to the project.

END OF SECTION

SECTION 01330

SUBMITTALS

PART 1 - GENERAL

1.01 WORK INCLUDED:

A. The Contractor shall provide the Engineer with submittals as required by the contract documents.

1.02 RELATED WORK:

A. Divisions 1 – 3 of these specifications that require submittals.

PART 2 - PRODUCTS

NOT USED

PART 3 - EXECUTION

3.01 GENERAL:

A. As required by the General Conditions, Contractor shall submit a schedule of shop and working drawing submittals.

B. The Contractor shall submit the shop and working drawing submittals either electronically or hard copy.

3.02 ELECTRONIC SUBMITTALS:

A. In accordance with the accepted schedule, the Contractor shall submit promptly to the Engineer by email (davida@wseinc.com) or on Compact Disc (mail to Weston & Sampson Engineers, attention: CSD), one electronic copy in Portable Document Format (PDF) of shop or working drawings required as noted in the specifications, of equipment, structural details and materials fabricated especially for this Contract.

B. Each electronic copy of the shop or working drawing shall be accompanied by the Engineer's standard shop drawing transmittal form, included as Exhibit 1 of this section (use only for electronic submittals), on which is a list of the drawings, descriptions and numbers and the names of the Owner, Project, Contractor and building, equipment or structure.

C. The Contractor shall receive a shop drawing memorandum with the Engineer's approval or comments via email.

3.03 HARD COPY SUBMITTALS:

A. In accordance with the accepted schedule, the Contractor shall submit promptly to the Engineer, by mail (to Weston & Sampson Engineers, attention: CSD), six (6) copies each of shop or working drawings required as noted in the specifications, of equipment, structural details and materials fabricated especially for this Contract.

B. Each shipment of drawings shall be accompanied by the Engineer's (if applicable) standard shop drawing transmittal form on which is a list of the drawings, descriptions and numbers and the names of the Owner, Project, Contractor and building, equipment or structure.

3.04 SHOP AND WORKING DRAWINGS:

A. Shop and working drawings shall show the principal dimensions, weight, structural and operating features, space required, clearances, type and/or brand of finish of shop coat, grease fittings, etc., depending on the subject of the drawings. When it is customary to do so, when the dimensions are of particular importance, or when so specified, the drawings shall be certified by the manufacturer or fabricator as correct for this Contract.

B. All shop and working drawings shall be submitted to the Engineer by and/or through the Contractor, who shall be responsible for obtaining shop and working drawings from his subcontractors and returning reviewed drawings to them. All shop and working drawings shall be prepared on standard size, 24-inch by 36-inch sheets, except those, which are made by changing existing standard shop or working drawings. All drawings shall be clearly marked with the names of the Owner, Project, Contractor and building, equipment or structure to which the drawing applies, and shall be suitably numbered. Each shipment of drawings shall be accompanied by the Engineer's (if applicable) standard shop drawing transmittal form on which is a list of the drawings, descriptions and numbers and the names mentioned above.

C. Only drawings that have been prepared, checked and corrected by the fabricator should be submitted to the Contractor by his subcontractors and vendors. Prior to submitting drawings to the Engineer, the Contractor shall check thoroughly all such drawings to satisfy himself that the subject matter thereof conforms to the Contract Documents in all respects. Shop drawings shall be reviewed and marked with the date, checker's name and indication of the Contractor's approval, and only then shall be submitted to the Engineer. Shop drawings unsatisfactory to the Contractor shall be returned directly to their source for correction, without submittal to the Engineer. Shop drawings submitted to the Engineer without the Contractor's approval stamp and signature will be rejected. Any deviation from the Contract Documents indicated on the shop drawings must be identified on the drawings and in a separate submittal to the Engineer, as required under subsection 6.17 Shop Drawings and Samples; D. Submittal Procedures, Paragraph 3 of the 1996 General Conditions.

D. The Contractor shall be responsible for the prompt submittal and resubmittal, as necessary, of all shop and working drawings so that there will be no delay in the work due to the absence of such drawings.

E. The Engineer will review the shop and working drawings as to their general conformance with the design concept of the project and general compliance with the information given in the Contract Documents. Corrections of comments made on the drawings during the review do not relieve the Contractor from compliance with requirements of the Contract Documents. The Contractor is responsible for: confirming and correlating all quantities and dimensions; selecting fabrication processes and techniques of construction; coordinating his work with that of all other trades; and performing his work in a safe and satisfactory manner. The review of the shop drawings is general and shall not relieve the Contractor of the responsibility for details of design, dimensions, code compliance, etc., necessary for interfacing with other components, proper fitting and construction of the work required by the Contract and for achieving the specified performance. The Engineer will review submittals two times: once upon original submission and a second time if the Engineer requires a revision or corrections. The Contractor shall reimburse the Owner amounts charged to the Owner by the Engineer for performing any review of a submittal for the third time or greater.

F. With few exceptions, shop drawings will be reviewed and returned to the Contractor within 30 days of submittal.

G. No material or equipment shall be purchased or fabricated especially for this Contract nor shall the Contractor proceed with any portion of the work, the design and details of which are dependent upon the design and details of equipment or other features for which review is required, until the required shop and working drawings have been submitted and reviewed by the Engineer as to their general conformance and compliance with the project and its Contract Documents. All materials and work involved in the construction shall then be as represented by said drawings.

H. Two copies of the shop and working drawings and/or catalog cuts will be returned to the Contractor. The Contractor shall furnish additional copies of such drawings or catalog cuts when he needs more than two copies or when so requested.

3.05 SAMPLES:

A. Samples specified in individual Sections include, but are not necessarily limited to, physical examples of the work such as sections of manufactured or fabricated work, small cuts or containers of materials, complete units of repetitively-used products, color/texture/pattern swatches and range sets, specimens for coordination of visual effect, graphic symbols, and units of work to be used by the Engineer or Owner for independent inspection and testing, as applicable to the work.

B. The number of samples submitted shall be as specified. Submittal and processing of samples shall follow the procedures outlined for shop and working drawings unless the specifications call for a field submittal or mock-up.

C. Acceptance of samples will be acknowledged via a copy of the transmittal noting status. When samples are not acceptable, prompt resubmittal will be required.

END OF SECTION

O:\Quincy MA\FY 2016 Water Main Project\Design\Specifications\01330 - Submittals.docx

EXHIBIT 1 TO SECTION 01330 SUBMITTALS

SHOP DRAWING TRANSMITTAL FORM

Shop Drawing Transmittal

Weston&Sampson
ENGINEERS, INC.

Instructions for Preparing Transmittal

No action will be taken on any item unless accompanied by this form.
Type or print all entries.

TRANSMITTAL NOS. to be consecutive (1, 2, 3, etc.).
Each resubmittal of same item shall use same number with suffix letter (A, B, etc.).

SPEC. SECT. NO: Only one spec. section no. to each transmittal.

DESCRIPTION: Complete identification of document or group of documents.

SOURCE: Originator of document(s) being submitted.

DRAWING NO: Identification of document(s).

NO. of COPIES: Usually 6 or as directed/specified.

CONTRACT DRAWING REFERENCE: Contract drawing number(s) showing details of document(s) being submitted.

SPECIAL INSTRUCTIONS: Special cases and emergencies, changes in distribution and special handling requests, etc. should be entered here.

SIGNATURE OF CONTRACTOR: Signature of individual who reviews and approves material prior to submittal to engineer.

Contractor to retain last copy. Submit original with two pink and two yellow copies.

THIS SECTION TO BE COMPLETED BY CONTRACTOR

TRANSM. NO.	SPEC. SECT. NO.	DATE / /	CONTRACTOR'S JOB NO.	W&S JOB NO.

PROJECT NAME & CONTRACT NO.	LOCATION

TO	FROM
Attention: CSD Weston & Sampson Engineers, Inc. 5 Centennial Drive Peabody, MA 01960-7985	(CONTRACTOR)

ITEM NO.	DESCRIPTION	SOURCE	DRAWING NO. CATALOG NO. BROCHURE, ETC.	NO. OF COPIES	CONTRACT DRAWING REF.	BY W&S ACTION CODE	BY W&S REVIEWED BY
1							
2							
3							
4							

THIS CERTIFIES THAT ALL ITEMS SUBMITTED HEREWITH HAVE BEEN CHECKED BY THE CONTRACTOR, ARE IN CONFORMANCE WITH THE REQUIREMENTS OF THE CONTRACT DOCUMENTS, EXCEPT AS NOTED, AND ARE APPROVED BY THE CONTRACTOR FOR THIS PROJECT.

SPECIAL INSTRUCTIONS:

(FOR CONTRACTOR)
SIGNATURE
& TITLE:

THIS SECTION TO BE COMPLETED BY W&S

ACTION CODE
1. NO EXCEPTIONS TAKEN
2. MAKE CORRECTIONS NOTED
3. AMEND AND RESUBMIT
4. REJECTED - SEE REMARKS
5. ACKNOWLEDGMENT

a. INSTALLATION SHALL PROCEED ONLY WHEN ACTION CODE IS 1 or 2.

b. ACTION CODED 3 SHALL BE RESUBMITTED WITHIN TIME LIMIT SET IN CONTRACT.

c. REVIEW DOES NOT RELIEVE CONTRACTOR FROM RESPONSIBILITY OF COMPLIANCE WITH ALL REQUIREMENTS OF THE CONTRACT DOCUMENTS.

FIELD OFFICE
REC'D BY
DATE / /

Weston&Sampson
ENGINEERS, INC.

BY

/ /
DATE

Please! **BEAR DOWN WHEN HANDWRITING — THIS IS A 6 COPY FORM & THE LAST COPY IS YOURS!**

SECTION 01550

SIGNAGE (TRAFFIC CONTROL)

PART 1 - GENERAL

1.01 WORK INCLUDED:

This Section covers furnishing and installing traffic control signs and other devices.

1.02 SYSTEM DESCRIPTION:

The Contractor shall furnish and install all construction signs deemed necessary by and in accordance with the latest edition of Part VI of the Manual on Uniform Traffic Control Devices(MUTCD) as published by the U.S. Department of Transportation.

PART 2 - PRODUCTS

2.01 TRAFFIC WARNING AND REGULATING DEVICES:

Contractor shall provide warning signs, barricades and other devices in accordance with the specifications provided in the MUTCD. Size of signs, lettering, colors, method of support and other factors prescribed in the MUTCD shall be adhered to.

PART 3 - EXECUTION

3.01 INSTALLATION:

A. Contractor shall erect barricades, barrier fences, traffic signs, and other traffic control devices as required by the MUTCD, or as required by the Engineer, to protect the work area from traffic, pedestrians, and animals.

B. Contractor shall relocate barricades, signs and other devices as necessary as the work progresses.

C. Unless extended protection is required for specific areas, when the work has been completed, all temporary warning and regulatory devices used by the Contractor shall be removed so that traffic can move unimpeded through the area.

END OF SECTION

O:\Quincy MA\FY 2016 Water Main Project\Design\Specifications\01550 Signage.docx

SECTION 01551

PORTABLE CHANGEABLE MESSAGE SIGN

PART 1 - GENERAL

1.01 WORK INCLUDED:

A. The work covered under this section shall consist of furnishing, maintaining, transporting and using a Trailer - Mounted Changeable Message Sign.

B. All messages displayed shall be approved by the Engineer.

1.02 REFERENCES

A. The following standard forms part of these specifications and indicates a minimum required standard:

Massachusetts Department of Transportation Standard Specifications for Highways and Bridges

PART 2 - PRODUCTS

2.01 GENERAL:

A. Materials required under this Section need not be new but must be in first class condition and acceptable to the Engineer. Any materials that in the judgement of the Engineer are unsatisfactory in appearance and/or performance shall be immediately replaced by acceptable units.

2.02 SPECIFIC REQUIREMENTS:

Refer to Sections 01330-Submittals and Section 01140–Special Provisions for information regarding required certification that all materials, products, equipment and/or services.

A. The Trailer-Mounted Changeable Message Sign shall meet the requirements of this specification and shall consists of the following major components;

1. Message Board
2. Operator Interface (CPU and Keyboard)
3. Power Supply
4. Towable Trailer

B. Message Board

1. Type - The display can be either Flip Disk, LED or a combination of both Flip Disk and LED (Hybrid).

2. Size - The message board shall have a minimum height of 74-inches, maximum height 80-inches and a minimum width of 98-inches, maximum width of 115-inches.

3. Colors - The display shall be either fluorescent yellow or ITE amber.

4. Lines - The sign board shall have the capability of displaying at least three lines of 18 inch characters with 1 to 9 characters per line.

5. Visibility and Viewing Angle - The sign shall be visible from a minimum distance of 900 feet with a viewing angle of no less than 30 degrees. The sign shall be either internally or externally illuminated for nighttime visibility.

2.03 OPERATOR INTERFACE:

A. A means of creating/controlling the on-site display message(s) shall be provided with each sign. The operator interface shall contain as a minimum the following:

1. Operator's Display terminal with keyboard will provide a full screen display to allow the operator to preview the message content and format before it is sent to the sign panel. The keyboard shall be of a standard design.

2. Controller (CPU)

3. Lockable weatherproof enclosure for interface components.

2.04 CONTROLLER:

A. The controller shall posses, as a minimum, the following features:

1. Full 32K user memory with the option for an additional 32K archive memory.

2. Capacity to store a minimum of 199 pre-defined messages and a minimum of 50 user-created messages (not to exceed 32K).

3. Changeable message flash rate capability.

4. A minimum of 24 hour battery back-up.

5. Password activation shall be software available.

2.05 POWER-SUPPLY

A. The sign shall be capable of operation from the following sources:

1. A diesel powered generator with a battery backup.

2. A battery with diesel generator charging or solar charging.

3. The power supply shall have a cover for weather protection and shall be lockable for security.

2.06 TOWABLE TRAILER

A. The trailer shall be of rugged construction suitable for towing at highway speeds and at low speed over rugged construction site terrain. The trailer shall have at least the following features:

1. Complete lighting to standard highway specifications.

2. A single axle with two (2) - 15 inch wheels (3500 GVW rated).

3. Two (2) inch ball coupler with heavy duty safety chains.

4. Four (4) corner-located leveling swivel jacks capable of leveling the trailer on one (1) in six (6) grade and capable of stabilizing the trailer in high winds of up to 80 MPH. in addition, a tongue leveling swivel jack shall be provided.

5. Surge breaks with lockable parking in conformance with Federal weight regulations.

6. The sign shall be capable of being locked in a stowed position while being towed.

7. A hydraulic lift mechanism shall be provided to elevate the sign to its operating position.

8. It shall be possible to lock the sign panel in several off-angle positions with respect to the trailer axis for enhanced visibility.

2.07 ENVIRONMENTAL:

A. The Trailer-Mounted Changeable Message Sign shall be capable of performing all functions at ambient temperatures ranging from -30 degrees F to +165 degrees F. There shall be no degradation of operation due to fog, rain or snow.

2.08 MAINTENANCE:

A. All components of the Trailer-Mounted Changeable Message Sign shall be readily accessible for ease of maintenance. Standard commercially available parts shall be used where possible.

B. The sign shall require no special scheduled maintenance. Maintenance shall include periodic cleaning. When not being used, at the discretion of the Engineer, the sign shall be stored in an approved secure area.

2.09 DOCUMENTATION:

A. As a minimum, the following documentation shall be supplied with each Trailer-mounted Changeable Message Sign:

1. Operating Manual

2. Parts Manual

3. Wiring Diagrams

4. Troubleshooting Guide

PART 3 - EXECUTION

3.01 INSTALLATION:

A. All warning devices shall be subject to removal, replacement and/or repositioning as often as necessary. The changeable message unit shall be available for immediate use on the project and be positioned as required by the Engineer. The Contractor shall be responsible for the maintenance of such device and appurtenances, throughout its use on the project, with no additional compensation thereof, other than as provided under the contract unit price. Should the unit be found defective in any way it shall be replaced immediately at the Contractor's expense.

B. For work under this contract, the Contractor shall provide Trailer-Mounted Changeable Message signs for the following streets or as required by the Engineer a minimum of 14 days before the start of work on each street and they are to remain in operation until work on that particular street is completed to the satisfaction of the Engineer.

1.) Elm Avenue – A minimum of three Trailer-Mounted Changeable Message Signs shall be required for work on this street.

2.) Winthrop Park – No Trailer-Mounted Changeable Message Signs shall be required for work on this street.

3.) Main Street – No Trailer Mounted Changeable Message Signs shall be required for work on this street.

4.) Winthrop Street – A minimum of two Trailer-Mounted Changeable Message Signs shall be required for work on this street.

5.) Sea Street – A minimum of two Trailer-Mounted Changeable Message Signs shall be required for work on this street.

END OF SECTION

O:\Quincy MA\FY 2016 Water Main Project\Design\Specifications\01551- Portable Changeable Message Sign.dotx.docx

SECTION 01552

CONSTRUCTION ZONE SAFETY PLAN

PART 1 - GENERAL

1.01 WORK INCLUDED:

A. This Section covers the provisions for complying with Commonwealth of Massachusetts requirements for construction zone safety plans on public works projects.

1.02 DESCRIPTION:

A. The Contractor shall implement traffic safety and control measures through the construction zone through road closures and detours and mitigate impacts on traffic outside of the construction zone in accordance with these contract documents.

1.03 RELATED WORK:

A. SECTION 01110, CONTROL OF WORK AND MATERIALS (MAINTENANCE OF TRAFFIC)

B. SECTION 01550, SIGNAGE (TRAFFIC CONTROL)

C. SECTION 01553, UNIFORMED OFFICERS FOR TEMPORARY TRAFFIC CONTROL

1.04 REFERENCES:

701 CMR 7.00 Use of Road Flaggers and Police Details on Public Works Projects

Massachusetts Department of Transportation Standard Specifications for Highways and Bridges – latest edition

PART 2 - PRODUCTS

2.01 Traffic control devices utilized by the Contractor shall meet the requirements of these contract documents and the latest Massachusetts Department of Transportation (MassDOT) Standard Specifications and Manual On Uniform Traffic Control Devices (MUTCD).

PART 3 - EXECUTION

3.01 OPERATION:

A. Contractor shall be responsible for providing all temporary traffic control devices including barricades, barrier fences, signs, drums, cones, impact attenuators and other traffic control devices in accordance with typical traffic management plans and details shown on the drawings or as required by the Engineer.

B. The Contractor shall prepare temporary traffic management plans and details that deviates significantly from the typical plans shown on the drawings and submit to the Engineer for review and approval prior to start of the work.

C. Contractor shall relocate barricades, signs and other devices as necessary as the work progresses as required by the Owner's Traffic Control Officer or the Engineer.

D. Police details shall be utilized on this project.

E. If police details fail to show up for work at the construction zone at the usual time for start of work, or otherwise leave the jobsite before work is completed for the day, the provisions of the Alternative Plan will be followed by the Contractor.

3.02 ALTERNATIVE PLAN:

A. In accordance with 701 CMR 7.06(6), whenever required police details/road flaggers do not arrive on time or fail to show up for work, the Alternative Plan will be implemented by the Contractor.

B. The Alternative Plan for this project is as follows:

1. Contact local police department and municipality to inform them the scheduled police detail and request another police detail.

2. Redeploy crew to work in areas not requiring temporary traffic control (if available).

END OF SECTION

O:\Quincy MA\FY 2016 Water Main Project\Design\Specifications\01552 Construction Zone Safety Plan.docx

SECTION 01553

UNIFORMED OFFICERS FOR TEMPORARY TRAFFIC CONTROL

PART 1 - GENERAL

1.01 WORK INCLUDED:

A. This Section covers the provisions for furnishing Uniformed Officers for Traffic Control and Maintenance of Traffic as described in Section 01110 CONTROL OF WORK AND MATERIALS.

1.02 DESCRIPTION:

A. The Contractor shall coordinate with the local jurisdiction's Traffic Control Officer to determine the number of Officers deemed necessary to provide for public safety and to maintain a smooth flow of traffic through the construction area(s) affected.

1.03 RELATED WORK:

A. SECTION 01110, CONTROL OF WORK AND MATERIALS (MAINTENANCE OF TRAFFIC)

B. SECTION 01550, SIGNAGE (TRAFFIC CONTROL)

C. SECTION 01551, PORTABLE CHANGEABLE MESSAGE SIGN

D. SECTION 01552, CONSTRUCTION ZONE SAFETY PLAN

PART 2 - PRODUCTS

2.01 UNIFORMED OFFICERS:

A. Contractor shall provide the Traffic Control Officer with a minimum of 24 hours notice indicating the time of day, street location and confirm number of officers required for traffic control.

B. Contractor shall give the Traffic Control Officer a minimum of 2 hours prior cancellation notice should Contractor determine that due to weather or conditions beyond his control he would not need the scheduled officers.

C. Contractor shall pay for officer(s) at the prevailing rate established by the local police department should officers not be needed and the Contractor fails to cancel the officers as noted in 2.01.B above.

PART 3 - EXECUTION

3.01 OPERATION:

A. Contractor shall provide barricades, barrier fences, traffic signs, and other traffic control devices as required by the Owners Traffic Control Officer, or as required by the Engineer, to protect the work area from traffic, pedestrians, and animals.

B. Contractor shall relocate barricades, signs and other devices as necessary as the work progresses as required by the Owners Traffic Control Officer or the Engineer.

END OF SECTION

O:\Quincy MA\FY 2016 Water Main Project\Design\Specifications\01553 Uniformed Officers for Temporary Traffic Control.docx

SECTION 01562

DUST CONTROL

PART 1 - GENERAL

1.01 DESCRIPTION:

This section of the specification covers the control of dust via calcium chloride and water, complete.

PART 2 - PRODUCTS

2.01 CALCIUM CHLORIDE:

A. Calcium chloride shall conform to the requirements of AASHTO-M 144, Type I or Type II and Specification for Calcium Chloride, ASTM D98. The calcium chloride shall be packaged in moisture proof bags or in airtight drums with the manufacturer, name of product, net weight, and percentage of calcium chloride guaranteed by the manufacturer legibly marked on each container.

B. Calcium chloride failing to meet the requirements of the aforementioned specifications or that which has become caked or sticky in shipment, may be rejected by the Engineer.

2.02 WATER:

A. Water shall not be brackish and shall be free from oil, acid, and injurious alkali or vegetable matter.

PART 3 - EXECUTION

3.01 APPLICATION:

A. Calcium chloride shall be applied when ordered by the Engineer and only in areas which will not be adversely affected by the application. See Section 01570, ENVIRONMENTAL PROTECTION.

B. Calcium chloride shall be uniformly applied at the rate of 1-1/2 pounds per square yard or at any other rate as required by the Engineer. Application shall be by means of a mechanical spreader, or other approved methods. The number and frequency of applications shall be determined by the Engineer.

C. Water may be sprinkler applied with equipment including a tank with gauge-equipped pressure pump and a nozzle-equipped spray bar.

D. Water shall be dispersed through the nozzle under a minimum pressure of 20 pounds per square inch, gauge pressure.

END OF SECTION

O:\Quincy MA\FY 2016 Water Main Project\Design\Specifications\01562 Dust Control.docx

SECTION 01570

ENVIRONMENTAL PROTECTION

PART 1 – GENERAL

1.01 DESCRIPTION:

A. The work covered by this section of the specifications consists of furnishing all labor, materials, tools and equipment and performing all work required for the prevention of environmental pollution during and as a result of construction operations under this contract.

B. The requirements set forth in this section of the specifications apply to cross-country areas, river and stream crossings, and construction in and adjacent to wetlands, unless otherwise specifically stated.

D. Prior to commencement of work, the Contractor shall meet with representatives of the Engineer to develop mutual understandings relative to compliance of the environmental protection program.

1.02 RELATED WORK:

A. Section 00890, PERMITS

B. Section 01330, SUBMITTALS

C. Section 01562, DUST CONTROL

E. Section 02240, DEWATERING

F. Section 02252, SUPPORT OF EXCAVATION

G. Section 02300, EARTHWORK

1.03 SUBMITTALS:

A. The Contractor shall submit for approval six sets of details and literature fully describing environmental protection methods to be employed in carrying out construction activities within 100 feet of wetlands or across areas designated as wetlands.

PART 2 – PRODUCTS

2.02 STRAW BALES:

A. Straw bales shall consist of certified seed free stems of agricultural grain and cereal crops and shall be free of grasses and legumes. Standard bales shall be 14-inches high, 18- inches wide and 36- to 40-inches long tied with polypropylene twine and weigh within 5 percent of 7 lbs. per cubic ft.

2.03 STRAW WATTLES:

A. Straw Wattles shall consist of a 100% biodegradable exterior jute or coir netting with 100% wheat straw interior filling as manufactured by Granite Environmental, Inc., Sebastian, Florida (Phone: 888-703-9889; website: www.GraniteEnvironmental.com), or approved equal.

2.01 CATCH BASIN PROTECTION:

A. To trap sediment and to prevent sediment from clogging drainage systems, catch basin protection in the form of a siltation sack (Siltsack as manufactured by ACF Environmental, Inc. or approved equal) shall be provided as approved by the Engineer.

PART 3- EXECUTION

3.01 NOTIFICATION AND STOPPAGE OF WORK:

A. The Engineer will notify the Contractor in writing of any non-compliance with the provisions of the Order of Conditions. The Contractor shall, after receipt of such notice, immediately take corrective action. Such notice, when delivered to the Contractor or his authorized representative at the site of the work, shall be deemed sufficient for the purpose. If the Contractor fails to act promptly, the Owner may order stoppage of all or part of the work through the Engineer until satisfactory corrective action has been taken. No claim for an extension of time or for excess costs or damage incurred by the Contractor as a result of time lost due to any stop work orders shall be made unless it was later determined that the Contractor was in compliance.

3.02 AREA OF CONSTRUCTION ACTIVITY:

A. Insofar as possible, the Contractor shall confine his construction activities to those areas defined by the plans and specifications. All land resources within the project boundaries and outside the limits of permanent work performed under this contract shall be preserved in their present condition or be restored to a condition after completion of construction at least equal to that which existed prior to work under this contract.

3.03 PROTECTION OF WATER RESOURCES:

A. The Contractor shall not pollute streams, lakes or reservoirs with fuels, oils, bitumens, calcium chloride, acids or other harmful materials. It is the Contractor's responsibility

to comply with all applicable Federal, State, County and Municipal laws regarding pollution of rivers and streams.

B. Special measures should be taken to insure against spillage of any pollutants into public waters.

3.04 CONSTRUCTION IN AREAS DESIGNATED AS WATER RESOURCE AREAS ON THE DRAWINGS:

A. Insofar as possible, the Contractor shall make every effort to minimize disturbance within areas designated as a water resource area or within 100-feet of water resource areas. Total easement widths shall be limited to the widths shown.

B. The Contractor shall perform his work in such a way that these areas are left in the condition existing prior to construction.

C. Excavated materials shall not be permanently placed or temporarily stored in areas designated as wetlands. Temporary storage areas for excavated material shall be as required by the Engineer.

C. During construction, catch basin protection and straw bale fence barrier or line of straw wattles shall be installed as noted on the plans.

3.05 LOCATION OF STORAGE AREAS:

A. The location of the Contractor's storage areas for equipment and/or materials shall be upon cleared portions of the job site or areas to be cleared as a part of this project, and shall require written approval of the Engineer. Plans showing storage facilities for equipment and materials shall be submitted for approval of the Engineer.

B. No excavated materials or materials used in backfill operations shall be deposited within a minimum distance of one hundred (100) feet of any watercourse or any drainage facility. Adequate measures for erosion and sediment control such as the placement of baled straw around the downstream perimeter of stockpiles shall be employed to protect any downstream areas from siltation.

C. There shall be no storage of equipment or materials in areas designated as wetlands.

D. The Engineer may designate a particular area or areas where the Contractor may store materials used in his operations.

E. Storage areas in cross-country locations shall be restored to pre-construction conditions with the planting of native species of trees and shrubs.

3.06 PROTECTION OF LANDSCAPE:

A. The Contractor shall not deface, injure, or destroy trees or shrubs nor remove or cut them without written authority from the Owner. No ropes, cables, or guys shall be fastened to or attached to any existing nearby trees for anchorages unless specifically authorized by the Engineer. Excavating machinery and cranes shall be of suitable type and be operated with care to prevent injury to trees which are not to be removed, particularly overhanging branches and limbs. The Contractor shall, in any event, be responsible for any damage resulting from such use.

B. Branches, limbs, and roots shall not be cut except by permission of the Engineer. All cutting shall be smoothly and neatly done without splitting or crushing. When there is unavoidable injury to branches, limbs and trunks of trees, the injured portions shall be neatly trimmed and covered with an application of grafting wax or tree healing paint as directed.

C. Where, in the opinion of the Engineer, trees may possibly be defaced, bruised, injured, or otherwise damaged by the Contractor's equipment or by his blasting or other operations, the Engineer may require the Contractor to adequately protect such trees by placing boards, planks, poles or fencing around them. Any trees or landscape feature scarred or damaged by the Contractor's equipment or operations shall be restored as nearly as possible to its original condition at the expense of the Contractor. The Engineer will decide what method of restoration shall be used.

D. Cultivated hedges, shrubs, and plants which could be injured by the Contractor's operations shall be protected by suitable means or shall be dug up, balled and temporarily replanted and maintained. After construction operations have been substantially completed, they shall be replanted in their original positions and cared for until growth is re-established. If cultivated hedges, shrubs, and plants are injured to such a degree as to affect their growth or diminish their beauty or usefulness, they shall be replaced by items of a kind and quality at least equal to that existing at the start of the work.

3.07 DISCHARGE OF DEWATERING OPERATIONS:

A. Any water that is pumped and discharged from the trench and/or excavation as part of the Contractor's water handling shall be filtered by an approved method prior to its discharge into a receiving water or drainage system.

B. Under no circumstances shall the Contractor discharge water to the areas designated as water resource areas. When constructing in a wetlands area, the Contractor shall discharge water from dewatering operations directly to the nearest drainage system, stream, or waterway after filtering by an approved method.

C. The pumped water shall be filtered through filter fabric and baled straw, a vegetative filter strip or a vegetated channel to trap sediment occurring as a result of the construction operations. The vegetated channel shall be constructed such that the

discharge flow rate shall not exceed a velocity of more than 1 foot per second. Accumulated sediment shall be cleared from the channel periodically.

3.08 DUST CONTROL:

A. During the progress of the work, the Contractor shall conduct his operations and maintain the area of his activities, including sweeping and sprinkling of streets as necessary, to minimize creation and dispersion of dust. If the Engineer decides it is necessary to use calcium chloride for more effective dust control, the Contractor shall furnish and spread the material, as directed. Calcium chloride shall be as specified under Section 01562, DUST CONTROL.

B. Calcium Chloride shall not be used for dust control within a drainage basin or in the vicinity of any source of potable water.

3.09 SEPARATION AND REPLACEMENT OF TOPSOIL:

A. Topsoil shall be carefully removed from cross-country areas where excavations are to be made, and separately stored to be used again as directed. The topsoil shall be stored in an area acceptable to the Engineer and adequate measures shall be employed to prevent erosion of said material.

3.10 BALED STRAW:

A. To trap sediment and to prevent sediment from clogging drainage systems, baled straw shall be used where shown on the drawings. Care shall be taken to keep the bales from breaking apart. The bales should be securely staked to prevent overturning, flotation, or displacement. All deposited sediment shall be removed periodically. Hay bales shall not be placed within a waterway during construction of the pipeline crossing.

3.11 ERECTION AND MAINTENANCE OF SILT FENCE:

A. Where indicated on the drawings or where required by the Engineer, the Contractor shall erect and maintain a temporary silt fence. In areas designated as wetlands, the Contractor shall line the limits of the construction easement with a silt fence. The silt fence shall be used specifically to contain sediment from runoff water and to minimize environmental damage caused by construction.

3.12 CATCH BASIN PROTECTION:

A. Catch basin protection shall be used for every catch basin, shown on the plans or as required by the Engineer, to trap sediment and prevent it from clogging drainage systems and entering wetlands. Siltation sacks shall be securely installed under the catch basin grate. Care shall be taken to keep the siltation sacks from breaking apart or clogging. All deposited sediment shall be removed periodically and at times prior to predicted precipitation to allow free drainage flow. Prior to working in areas where catch basins are to be protected, each catch basin sump shall be cleaned of all debris

and protected. The contractor shall properly dispose of all debris at no additional cost to the Owner.

3.13 STRAW WATTLES:

A. The wattles will be placed in a shallow trench (2-3 inches deep) and staked in the ground using wooden stakes driven at 4-foot intervals. The wooden stakes will be placed at a minimum depth of 24-inches into the ground.

END OF SECTION

O:\Quincy MA\FY 2016 Water Main Project\Design\Specifications\01570 - Environmental Protection.docx

SECTION 01740

CLEANING UP

PART 1 - GENERAL

1.01 DESCRIPTION:

The Contractor must employ at all times during the progress of his work adequate cleanup measures and safety precautions to prevent injuries to persons or damage to property. The Contractor shall immediately, upon request by the Engineer provide adequate material, equipment and labor to cleanup and make safe any and all areas deemed necessary by the Engineer.

1.02 RELATED WORK:

A. Section 00700 GENERAL CONDITIONS

B. Section 01110 CONTROL OF WORK AND MATERIALS

C. Section 01140 SPECIAL PROVISIONS

D. Section 01570 ENVIRONMENTAL PROTECTION

PART 2 - PRODUCTS

Not applicable

PART 3 - EXECUTION

2.01 DAILY CLEANUP:

A. The Contractor shall clean up, at least daily, all refuse, rubbish, scrap and surplus material, debris and unneeded construction equipment resulting from the construction operations and sweep the area. The site of the work and the adjacent areas affected thereby shall at all times present a neat, orderly and workmanlike appearance.

B. Upon written notification by the Engineer, the Contractor shall within 24 hours clean up those areas, which in the Engineer's opinion are in violation of this section and the above referenced sections of the specifications.

C. If in the opinion of the Engineer, the referenced areas are not satisfactorily cleaned up, all other work on the project shall stop until the cleanup is satisfactory.

2.02 MATERIAL OR DEBRIS IN DRAINAGE FACILITIES:

A. Where material or debris has washed or flowed into or has been placed in existing watercourses, ditches, gutters, drains, pipes, structures, such material or debris shall be entirely removed and satisfactorily disposed of during progress of the work, and the ditches, channels, drains, pipes, structures, and work shall, upon completion of the work, be left in a clean and neat condition.

2.03 REMOVAL OF TEMPORARY BUILDINGS, STRUCTURES AND EQUIPMENT:

A. On or before completion of the work, the Contractor shall, unless otherwise specifically directed or permitted in writing, tear down and remove all temporary buildings and structures built by him; shall remove all temporary works, tools and machinery or other construction equipment furnished by him; shall remove all rubbish from any grounds which he has occupied; shall remove silt fences and hay bales used for trapping sediment; and shall leave the roads and all parts of the property and adjacent property affected by his operations in a neat and satisfactory condition.

2.04 RESTORATION OF DAMAGED PROPERTY:

A. The Contractor shall restore or replace, when and as directed, any property damaged by his work, equipment or employees, to a condition at least equal to that existing immediately prior to the beginning of operations. To this end the Contractor shall do as required all necessary highway or driveway, walk and landscaping work. Materials, equipment, and methods for such restoration shall be as approved by the Engineer.

2.05 FINAL CLEANUP:

A. Before acceptance by the Owner, the Contractor shall perform a final cleanup to bring the construction site to its original or specified condition. This cleanup shall include removing all trash and debris off of the premises. Before acceptance, the Engineer shall approve the condition of the site.

END OF SECTION

O:\Quincy MA\FY 2016 Water Main Project\Design\Specifications\01740 Cleaning Up.docx

SECTION 02080

DUCTILE IRON PIPE AND FITTINGS FOR WATER MAINS

PART 1 - GENERAL

1.01 WORK INCLUDED:

This Section covers the furnishing, handling, hauling, laying, jointing, testing and disinfecting of all ductile iron pipe, including fittings and appurtenant work as indicated on the drawings and as specified.

1.02 RELATED WORK:

A. Section 02300, EARTHWORK

B. Section 02513, INSULATION FOR PIPELINES

C. Section 02514, HYDRANTS AND VALVES

D. Section 02515, WATER SERVICE CONNECTIONS

E. Section 02516, CONNECTIONS TO EXISTING WATER MAINS

1.03 QUALITY ASSURANCE:

A. All pipe and fittings shall be inspected and tested at the foundry as required by the standard specifications to which the material is manufactured. The Contractor shall furnish in duplicate to the Engineer sworn certificates of such tests.

B. In addition, the Owner reserves the right to have any or all pipe, fittings and special castings inspected and/or tested by an independent service at either the manufacturer's plant or elsewhere. Such inspection and/or tests shall be at the Owner's expense.

1.04 REFERENCES:

A. The following standards, latest revision thereof, form a part of this specification as referenced:

American Water Works Association (AWWA)

AWWA	C104	Cement-Mortar Lining for Ductile- Iron Pipe and Fittings
AWWA	C105	Polyethylene Encasement for Ductile Iron Pipe Systems

AWWA	C110	Ductile-Iron and Gray-Iron Fittings Water
AWWA	C111	Rubber Gasket Joints for Ductile- Iron Pressure Pipe and Fittings
AWWA	C116	Protective Fusion-Bonded Epoxy Coatings for the Interior and Exterior Surfaces of Ductile-Iron and Gray-Iron Fittings
AWWA	C150	Thickness Design of Ductile-Iron Pipe
AWWA	C151	Ductile-Iron Pipe, Centrifugally Cast for Water
AWWA	C153	Ductile-Iron Compact Fitting for Water Service.
AWWA	C600	Installation of Ductile-Iron Water Mains & Their Appurtenances
AWWA	C651	Disinfecting Water Mains

1.05 SUBMITTALS: IN ACCORDANCE WITH REQUIREMENTS OF GENERAL SPECIFICATIONS, SUBMIT THE FOLLOWING:

A. All shop drawings shall be submitted to the Engineer for review in accordance with this section and Section 01330 - Submittals.

B. Shop drawings shall consist of manufacturer's scale drawings, cuts or catalogs including descriptive literature and complete characteristics and specifications, and code requirements. Shop drawings shall be submitted for the ductile iron pipe, type of joint, fittings, couplings, filling rings, restrained joints, and lining and coating in accordance with specifications.

PART 2 - PRODUCTS

2.01 PIPE:

A. The Contractor shall use push-on joint type ductile iron pipe unless otherwise indicated on the plans or specified herein.

B. All ductile iron pipe shall be designed in accordance with AWWA C150 and shall be manufactured in accordance with AWWA C151.

C. Unless otherwise indicated or specified, ductile iron pipe shall be Thickness Class 52.

2.02 JOINTS:

A. Joints for ductile iron pipe shall conform to AWWA C111.

B. Pipe and fittings shall be furnished with approved joint restraining appurtenances as specified herein, or within the limits as indicated on the drawings, to keep the piping from pulling apart under pressure.

2.03 FITTINGS:

A. Fittings shall conform to the requirements of AWWA C110 or C153 as appropriate and shall be of a pressure classification at least equal to that of the pipe with which they are used.

B. The Contractor shall use ductile iron fittings. Cast-iron, Class 250 fittings may be substituted, upon approval of the Engineer, for ductile iron fittings.

C. Unless otherwise indicated, fittings shall have all bell mechanical joint ends.

2.04 GASKETS, GLANDS, NUTS AND BOLTS:

A. Gaskets, glands, nuts, bolts and accessories shall conform to AWWA C111 or C153 as appropriate.

B. Gaskets shall be of plain tipped rubber, suitable for exposure to the liquid within the pipe.

C. Glands shall be ductile or cast iron.

D. Bolts and nuts shall be high strength alloy.

2.05 LINING AND COATING:

A. The inside of pipe and fittings shall be given a cement lining and asphaltic seal coat in accordance with AWWA C104. The thickness of the lining shall be double that specified in AWWA C104.

B. The outside of pipe and fittings shall be coated with the standard asphaltic coating specified under the appropriate AWWA Standard Specification for pipe and fittings.

C. Machined surfaces shall be cleaned and coated with a suitable rust preventative coating at the shop immediately after being machined.

2.06 FLEXIBLE COUPLINGS:

A. The Contractor shall use solid sleeve coupling fittings for joining pipe. Sleeve-type flexible couplings may be substituted only with the approval of the Engineer.

B. All couplings and accessories shall be of a pressure rating at least equal to that of the pipeline in which they are to be installed.

C. Couplings shall be cast or ductile iron and shall be provided with gaskets of a composition suitable for exposure to the liquid within the pipe.

D. Sleeve-type couplings shall be made by Dresser Mfg. Div., Bradford, PA; Smith-Blair, Inc., San Francisco, CA; Romac Industries Inc., Seattle, WA; Ford Meter Box Co., Wabash, IN; or be an approved equal.

E. Couplings for buried pipe shall be Dresser 153; Smith-Blair Type 441 or 443; Romac Style 501; Ford Style FC1 or FC2; or approved equal.

2.07 JOINT RESTRAINTS:

A. Where indicated or necessary to prevent joints or sleeve couplings from pulling apart under pressure, anchoring and joint restraint methods shall be utilized. Methods shall be restrained joint systems. The number of joints to be restrained shall be determined in accordance with Table 1, as shown on the construction plans or provided by the Engineer.

B. Restrained joint systems for standard mechanical joint fittings or push on joint pipe shall be restraining glands (Megalug by EBAA Iron Sales Inc., Eastland, TX; StarGrip by Star Pipe Products, Houston, TX; RomaGrip by Romac Industries, Inc., Sultan, WA; Sigma One-Lok by Sigma Corporation, Cream Ridge, NJ; or approved equal) and restraining gaskets (Fast-grip joint by American Cast Iron Pipe Company, Birmingham, AL; Field Lok 350 Gasket by United States Pipe and Foundry Company, Birmingham, AL; Sure Stop 350 Restrained Joint Gaskets by McWane Ductile, Phillipsburg, NJ; or approved equal). Methods that rely on the use of friction clamps and/or retainer glands with set screws alone are not acceptable.

C. Restrained joint systems for non-standard or modified joints shall be Flex Ring or Lok-Ring by American Cast Iron Pipe Company, Birmingham, AL; T.R. Flex Joint by McWane Ductile, Phillipsburg, NJ: TR Flex Joint by United States Pipe and Foundry Company, Birmingham, AL; Snap Lok or Bolt Lok by United States Pipe and Foundry Company, Birmingham, AL; or approved equal.

D. Concrete thrust blocks may only be used for 6-inch, 8-inch, 10-inch, or 12-inch pipe where use of a joint restraint system is not feasible. Use of concrete thrust blocks shall be installed with the minimum bearing area (in square feet) against undisturbed material in accordance with the following:

Size of Main	90º Bends, Tees, Caps and Plugs	45º Bends and Wyes	22-½º Bends	11-¼º Bends
6- & 8-inch	5	4	2	2
10- & 12-inch	12	9	5	2

E. Tie rods may only be used for 6-inch, 8-inch, 10-inch, or 12-inch pipe where use of a joint restraint system is not feasible. Bolts shall have adequate length to allow nuts on both sides of the gland. Tie bolts shall have the same diameter as the tie rods and be in accordance with the following:

Pipe Size	Tie Rod	
	Number	Diameter
6	2	½”
8	2	¾”
10	2	¾”
12	4	¾”

F. Location of restrained joints shall be based on Table 1, as shown on the construction plans or provided by the Engineer. All joints that occur within the restrained length listed in Table 1, for the specific application, shall be restrained. For example, for a 90º bend, 8-inch unwrapped pipe, the restrained length required is 33 feet. Therefore, all joints within 33 feet of the 90º bend must be restrained.

2.08 POLYETHYLENE ENCASEMENT:

A. Where called for on the drawings, the pipe shall be encased in polyethylene conforming to AWWA C105.

B. Polyethylene encasement shall be either linear low density, minimum 8 mil thick or high density, cross-laminated, minimum 4 mil thick. Polyethylene encasement shall be clearly marked at a minimum of every 2-feet along its length with print that does not contain hazardous material. Markings shall contain manufacturer’s name, manufacture year, AWWA C105, minimum film thickness, and ‘Warning – Corrosion Protection – Repair any damage.’

PART 3 - EXECUTION

3.01 INSPECTION BEFORE INSTALLATION:

Pipes and fittings shall be subjected to a careful inspection just before being laid or installed.

3.02 HANDLING AND CUTTING:

A. Any pipe or fitting which has a damaged lining, scratched or marred machine surface and/or abrasion of the pipe coating or lining shall be rejected and removed from the job-site.

B. Any fitting showing a crack and any fitting or pipe which has received a severe blow that may have caused incipient fracture, even though no such fracture can be seen, shall be marked as rejected and removed at once from the work.

C. In any pipe showing a distinct crack and in which it is believed there is no incipient fracture beyond the limits of the visible crack, the cracked portions, if so approved, may be cut off by and at the expense of the Contractor before the pipe is laid so that the pipe used will be perfectly sound. The cut shall be made in the sound barrel at a point at least 12 inches from the visible limits of the crack.

D. Except as otherwise approved, all cutting shall be done with a machine suitable for cutting ductile iron pipe. Hydraulic squeeze cutters are not acceptable for cutting ductile iron pipe. Travel type cutters or rotary type abrasive saws may be used. All cut ends shall be examined for possible cracks caused by cutting.

E. Lined and coated pipe and fittings shall be assembled and installed with approved packing or gaskets of the type recommended by the pipe manufacturer for the particular lining used.

3.03 INSTALLATION:

A. DEPTH:

1. The pipe shall be installed with a minimum of 5'-0" of cover, unless specifically indicated otherwise on the plans or required by the Engineer.

2. Where pipe is installed at less than the required cover, the Contractor shall furnish and install insulation in accordance with Section 02513, INSULATION FOR PIPELINES, or as required by the Engineer.

B. PIPE AND FITTINGS:

1. No defective pipe or fittings shall be laid or placed in the piping, and any piece discovered to be defective after having been laid or placed shall be removed and replaced by a sound and satisfactory piece.

2. Each pipe and fitting shall be cleared of all debris, dirt, etc., before being laid and shall be kept clean until accepted in the complete work.

3. Pipe and fittings shall be laid accurately to the lines and grades indicated on the drawings or as required. Care shall be taken to ensure good alignment both horizontally and vertically.

4. In buried pipelines, each pipe shall have firm bearing along its entire length.

5. Castings to be encased in masonry shall be accurately set, with the bolt holes, if any, carefully aligned.

6. Immediately prior to being set, castings shall be thoroughly cleaned of all rust, scale and other foreign material.

7. Fittings shall not be used to clear beneath or above an existing structure or pipeline unless approved by the Engineer. The water main shall be brought to a depth sufficient to clear the structure or pipeline without the use of bends.

C. TEMPORARY PLUGS:

At all times when pipe laying is not actually in progress, the open ends of pipe shall be closed by temporary watertight plugs or by other approved means. If water is in the trench when work is resumed, the plug shall not be removed until all danger of water entering the pipe has passed.

D. PUSH ON JOINTS:

1. Joining of push-on joint pipe shall conform to AWWA C600.

2. If effective sealing of the joint is not attained, the joint shall be disassembled, thoroughly cleaned, a new gasket inserted and joint reassembled.

3. Deflection of alignment at a joint shall not exceed the appropriate permissible deflection as specified in AWWA C600. The tables in AWWA C600 indicate the maximum permissible deflection for 18 and 20-foot pipe lengths. Maximum permissible deflections for other lengths shall be in proportion to such lengths.

E. MECHANICAL JOINTS:

1. Assembling of fittings with mechanical joint ends shall conform to AWWA C600.

2. If effective sealing of the joint is not attained at the maximum torque indicated in the above standard, the joint shall be disassembled and thoroughly cleaned, then reassembled. Bolts shall not be overstressed to tighten a leaking joint.

3. The deflection of alignment at a joint shall not exceed the appropriate permissible deflection as specified in the following table. These values indicate the maximum permissible deflection for 18-foot lengths. Maximum permissible deflections for other lengths shall be in proportion to such lengths.

Pipe Deflection Allowances

Maximum permissible deflection, inches

Diameter of Pipe (inches)	Mechanical-Joint
6	27
8-12	20
16	13.5
20	11
24	9

F. RESTRAINED JOINTS:

1. Joining of restrained joint piping shall conform to the manufacturer's recommendations.

2. If effective sealing of the joint is not attained, the joint shall be disassembled, thoroughly cleaned, a new gasket inserted and joint reassembled.

3. Deflection of alignment at a joint shall not exceed the appropriate permissible deflection recommended by the manufacturer.

4. All restraining appurtenances (and tie rods) shall be coated with an approved bituminous paint after assembly. The completed joint shall be inspected and the paint repaired/touched-up as necessary.

G. SLEEVE-TYPE COUPLINGS:

1. Pipe ends shall be cleaned thoroughly prior to installation. After the bolts have been inserted and all nuts have been made up finger tight, diametrically opposite nuts shall be progressively and uniformly tightened all around the joint, preferable by use of a torque wrench of the appropriate size and torque for the bolts. The correct torque as indicated by a torque wrench shall not exceed 90 foot lb. for joints up to 24-inches.

3.04 POLYETHYLENE ENCASEMENT:

A. The pipe to be encased shall be thoroughly cleaned of all soil and debris prior to installation of the polyethylene encasement. No soil or debris shall be allowed to enter the encasement during or after its installation.

B. Polyethylene encasement shall be installed using Method A as described in AWWA C105, with the encasement joints coincident with pipe joints. Adhesive tape shall be used to secure the encasement.

C. Minimum overlap of polyethylene encasement shall be 24-inches, 12 inches on each side of pipe joints.

D. If required, two layers of polyethylene encasement shall be installed. The first layer shall be completely installed on and secured to the length of pipe before the second layer is installed.

E. Tears, cuts and other damage shall be repaired with a piece of polyethylene covering secured with adhesive tape, when approved by the Engineer. Otherwise, the damaged length of polyethylene shall be replaced at the Contractor's expense.

F. Care shall be taken when backfilling to avoid damage to the polyethylene encasement.

G. Service and fitting connections shall be made by making an x-shaped cut in the polyethylene and folding back the cut film. Immediately following completion of the

connection, the film shall be secured to the connection with adhesive tape and the cut area repaired. Alternately, apply 2 to 3 wraps of polyethylene adhesive tap completely around the pipe to cover the area where the tapping machine and chain will be mounted; make the tap directly through the tape and polyethylene material. Check for any damage from the chain after the tap is complete and repair with polyethylene adhesive tape as needed. Service connections shall be wrapped with polyethylene encasement for a minimum of 3 feet from the point of connection to the encased pipe.

H. At the junctions between wrapped and unwrapped pipe the polyethylene encasement shall be extended a minimum of 3 feet beyond the end of the pipe scheduled to be encased and the ends of the encasement securely taped so that no soil can enter the encasement.

3.05 TESTING:

A. Prior to the hydrostatic pressure test, the piping shall be thoroughly flushed clean of all dirt, dust, oil, grease and other foreign material. This work shall be done with care to avoid damage to linings and coatings. Flushing velocity shall be a minimum of 2.5 ft. /sec.

B. The installed pipe shall be pressure tested in accordance with AWWA Standard C600.

C. HYDROSTATIC PRESSURE TEST:

1. Unless otherwise approved, all pipelines shall be given a hydrostatic pressure test between line valves. The Contractor shall furnish and install suitable temporary testing plugs or caps; all necessary pressure pumps, pipe connections, meters, gates, and other necessary equipment; and all labor required. The Owner or Engineer shall have the privilege of using its own gauges.

2. Subject to approval and provided that the tests are made within a reasonable time considering the progress of the project as a whole, and the need to put the section into service, the Contractor may make the tests when desired.

3. Pipelines intended for buried service shall be tested after backfill and compaction of the trench.

4. The section of pipe to be tested shall be filled with water of approved quality and all air shall be expelled from the pipe. The Contractor shall follow established procedures for filling the pipe and expelling trapped air to avoid exposing the piping system to water-hammer. If blowoffs are not available at high points for releasing air, the Contractor shall excavate as required and install the necessary taps. If the Contractor changes the grade of pipe installation, he will be responsible for locating the taps at the correct location in the system for testing. Taps shall be installed at the beginning and end of each disinfection run. After completion of the test, if so required by the Engineer, the Contractor shall remove corporations used for testing; plug the holes; and backfill as necessary.

5. The section under test shall be maintained full of water at working pressure for a period of 24 hours prior to the hydrostatic pressure test being applied to stabilize the pipeline with respect to movement under pressure, water absorption by the lining, etc. The pipeline may require several cycles of pressurizing and bleeding trapped air prior to beginning the test.

6. When hydrants are in the pipeline test section, the hydrostatic test shall be made against the main valve in the hydrant. The hydrostatic test shall not be conducted against the branch valve.

7. The hydrostatic test shall consist of raising the water pressure within the test section to a pressure not less than 1.25 times the working pressure of the pipeline measured at the highest elevation along the test section and not less than 1.5 times the working pressure of the lowest elevation of the test section. The specified test pressure shall be corrected to the elevation of the test gauge.

8. The hydrostatic test shall be of at least a 2 hour duration. The test pressure shall not vary by more than +/- 5 psi for the duration of the test. Test pressure shall be maintained within this tolerance by adding makeup water through the pressure test pump into the pipeline test section.

9. The amount of makeup water (testing allowance) added to the test section shall be accurately measured by suitable methods and shall not exceed the maximum allowable quantity of makeup water. No pipe installation will be accepted if the quantity of makeup water is greater than that determined by the following formula:

$$L = \frac{S\,D\sqrt{P}}{148{,}000}$$

Where:

L = makeup water, in gallons per hour
S = length of test section, in feet
D = nominal diameter of pipe, in inches
P = average test pressure, in psi (gauge)

.

10. If the section fails to pass the hydrostatic pressure test, the Contractor shall do everything necessary to locate, uncover, and repair or replace the defective pipe, fitting, or joint, all at his own expense and without extension of time for completion of the work. Additional tests and repairs shall be made until the section passes the specified hydrostatic test.

D. All Hydrostatic pressure tests shall be certified and signed off by an independent third party, who is insured and experienced in AWWA water line testing procedures and standards. The third party certification shall be paid for at the Contractor's expense. The Owner will not accept pressure tests that have not been certified by an independent third party.

3.06 DISINFECTION AND FLUSHING:

A. The Contractor shall disinfect the lines carrying potable water.

B. The Contractor shall furnish all equipment and materials necessary to do the work of disinfecting, and shall perform the work in accordance with the procedure outlined in AWWA C651 and all amendments thereto.

C. In general, the procedure of disinfecting the main shall be to apply the chlorine through a tap in one end of the section and bleed it off through a tap at the other end.

D. The applied dosage shall be such as to produce a chlorine concentration of not less than 10 mg/l after a contact time of not less than 24 hours.

E. During the disinfection period, care shall be exercised to prevent contamination of water in existing mains.

F. Any temporary connection to the mains or other facilities required to accomplish the disinfection of the mains shall be at the Contractor's expense.

G. After treatment, the main shall be flushed with clean water until the residual chlorine concentration is less than 0.2 mg/l. The flushing rate shall be 3.0 ft. /sec to achieve full scour of sand particles.

H. Before disposing of the water used in disinfecting and flushing water mains the Contractor shall thoroughly neutralize it through the application of a reducing agent, as referenced in AWWA C651 and C655.

I. Bacteriological sampling and testing shall be done in accordance with AWWA C651 (Option A – One sample taken after flushing is complete followed by another sample taken 16 hours after the first sample or Option B – Two samples taken 15 minutes apart after a 16 hour post flushing rest period) for each main and each branch. Sampling shall be accomplished with sterile bottles treated with sodium thiosulfate, as required by Standard Methods. No hose or fire hydrants shall be used in collection of samples. A corporation stop installed on the main, with a removable copper tube gooseneck assembly, is the recommended method.

J. Bacteriological sampling and testing shall be conducted by a Massachusetts state certified laboratory certified for total and fecal coliform analyses of potable water.

K. Testing shall be done by a laboratory approved by the Engineer, in accordance with Standard Methods, and shall show the absence of coliform organisms. **A standard plate count may be required at the option of the Engineer.**

END OF SECTION

SECTION 02221

ABANDONMENT OF EXISTING WATER MAINS

PART 1 - GENERAL

1.01 WORK INCLUDED:

A. This Section covers the abandonment of existing water mains, complete.

B. The Contractor shall abandon water mains as indicated on the drawings.

1.02 RELATED WORK:

A. Section 02300, EARTHWORK

B. Section 02080, DUCTILE IRON PIPE AND FITTINGS

C. Section 03302, FIELD CONCRETE

PART 2 - PRODUCTS (NOT APPLICABLE)

PART 3 - EXECUTION

3.01 ABANDONMENT OF EXISTING WATER MAINS:

A. All water mains to be abandoned shall be physically removed and disposed of by the Contractor only when the main enters the trench limits.

B. Sections of water mains that are not removed shall have open ends plugged with concrete or brick and mortar to prevent the entrance of soil into the pipe after backfilling.

C. Any water main to be abandoned shall be cut at its connection to a live main and physically disconnected. A watertight ductile iron cap with concrete backing shall be installed on the live main. If a gate valve or corporation stop exists at the connection, it shall be closed.

D. Valve boxes shall be removed from all valves and curb stops which are on the abandoned main.

E. Hydrants, including hydrant barrels to be abandoned shall be removed completely and delivered to the Owner's storage area. Open pipe ends remaining shall be plugged with concrete or brick and mortar to prevent the entrance of soil into the pipe after backfilling.

END OF SECTION

SECTION 02240

DEWATERING

PART 1 - GENERAL

1.01 WORK INCLUDED:

This section specifies designing, furnishing, installing, maintaining, operating and removing temporary dewatering systems as required to lower and control water levels and hydrostatic pressures during construction; disposing of pumped water; constructing, maintaining, observing and, except where indicated or required to remain in place, removing of equipment and instrumentation for control of the system.

1.02 RELATED WORK:

A. Section 00890, PERMITS

B. Section 01570, ENVIRONMENTAL PROTECTION

C. Section 02252, SUPPORT OF EXCAVATION

D. Section 02300, EARTHWORK

1.03 SYSTEM DESCRIPTION:

A. Dewatering includes lowering the water table and intercepting seepage which would otherwise emerge from the slopes or bottom of the excavation; increasing the stability of excavated slopes; preventing loss of material from beneath the slopes or bottom of the excavation; reducing lateral loads on sheeting and bracing; improving the excavation and hauling characteristics of sandy soil; preventing rupture or heaving of the bottom of any excavation; and disposing of pumped water.

1.04 QUALITY ASSURANCE:

A. The Contractor is responsible for the adequacy of the dewatering systems.

B. The dewatering systems shall be capable of effectively reducing the hydrostatic pressure and lowering the groundwater levels to a minimum of 2 feet below excavation bottom, unless otherwise required by the Engineer, so that all excavation bottoms are firm and dry.

C. The dewatering system shall be capable of maintaining a dry and stable subgrade until the structures, pipes and appurtenances to be built therein have been completed to the extent that they will not be floated or otherwise damaged.

D. The dewatering system and excavation support (see Section 02252, SUPPORT OF EXCAVATION) shall be designed so that lowering of the groundwater level outside the excavation does not adversely affect adjacent structures, utilities or wells.

1.05 SUBMITTALS

A. Contractor shall submit six copies of a plan indicating how they intend to control the discharge from any dewatering operations on the project, whether it is discharge of groundwater from excavations or stormwater runoff during the life of the project.

PART 2 - PRODUCTS: NOT APPLICABLE

PART 3 - EXECUTION

3.01 DEWATERING OPERATIONS:

A. All water pumped or drained from the work shall be disposed of in a manner that will not result in undue interference with other work or damage to adjacent properties, pavements and other surfaces, buildings, structures and utilities. Suitable temporary pipes, flumes or channels shall be provided for water that may flow along or across the site of the work. All disposal of pumped water shall conform to the provisions of Section 01570 ENVIRONMENTAL PROTECTION and Section 00890 PERMITS.

B. Dewatering facilities shall be located where they will not interfere with utilities and construction work to be done by others.

C. Dewatering procedures to be used shall be as described below:

1. Crushed stone shall encapsulate the suction end of the pump to aid in minimizing the amount of silt discharged.

2. For dewatering operations with relatively minor flows, pump discharges shall be directed into hay bale sedimentation traps lined with filter fabric. Water is to be filtered through the hay bales and filter fabric prior to being allowed to seep out into its natural watercourse.

3. For dewatering operations with larger flows, pump discharges shall be into a steel dewatering basin. Steel baffle plates shall be used to slow water velocities to increase the contact time and allow adequate settlement of sediment prior to discharge into waterways.

4. Where indicated on the contract drawings or in conditions of excess silt suspended in the discharge water, silt control bags shall be utilized in catch basins.

D. The Contractor shall be responsible for repair of any damage caused by his dewatering operations, at no cost to the Owner.

END OF SECTION

SECTION 02252

SUPPORT OF EXCAVATION

PART 1 - GENERAL

1.01 WORK INCLUDED:

A. This section of the specification covers wood sheeting and bracing for support of excavations. The requirements of this section shall also apply, as appropriate, to other methods of excavation support and underpinning which the Contractor elects to use to complete the work.

B. The Contractor shall furnish and place timber sheeting of the kinds and dimensions required, complying with these specifications, where indicated on the drawings or required by the Engineer.

1.02 RELATED WORK:

A. Section 02240, DEWATERING.

B. Section 02300, EARTHWORK.

1.03 QUALITY ASSURANCE:

A. This project is subject to the Safety and Health regulations of the U.S. Department of Labor set forth in 29 CFR, Part 1926, and to the Massachusetts Department of Safety and Department of Labor, Division of Occupational Safety "Excavation & Trench Safety Regulation (520 CMR 14.00)" and "Rules and Regulations for the Prevention of Accidents in Construction Operations (454 CMR 10.0 et seq.)." Contractors shall be familiar with the requirements of these regulations.

B. The excavation support system shall be of sufficient strength and be provided with adequate bracing to support all loads to which it will be subjected. The excavation support system shall be designed to prevent any movement of earth that would diminish the width of the excavation or damage or endanger adjacent structures.

PART 2 - PRODUCTS

2.01 MATERIALS:

A. Timber sheeting shall be sound spruce, pine, or hemlock, planed on one side and either tongue and grooved or splined. Timber sheeting shall not be less than nominal 2-inches thick.

B. Timber and steel used for bracing shall be of such size and strength as required in the excavation support design. Timber or steel used for bracing shall be new or undamaged

used material which does not contain splices, cutouts, patches, or other alterations which would impair its integrity or strength.

PART 3 - EXECUTION

3.01 INSTALLATION:

A. Work shall not be started until all materials and equipment necessary for their construction are either on the site of the work or satisfactorily available for immediate use as required.

B. The sheeting shall be securely and satisfactorily braced to withstand all pressures to which it may be subjected and be sufficiently tight to minimize lowering of the groundwater level outside the excavation, as required in Section 02240, DEWATERING.

C. The sheeting shall be driven by approved means to the design elevation. No sheeting may be left so as to create a possible hazard to safety of the public or a hindrance to traffic of any kind.

D. If boulders or very dense soils are encountered, making it impractical to drive a section to the desired depth, the section shall, as required, be cut off.

E. The sheeting shall be left in place where indicated on the drawings or required by the Engineer in writing. At all other locations, the sheeting may be left in place or salvaged at the option of the Contractor. Steel or wood sheeting permanently left in place shall be cut off at a depth of not less than two feet below finish grade unless otherwise required.

F. All cut-off will become the property of the Contractor and shall be removed by him from the site.

G. Responsibility for the satisfactory construction and maintenance of the excavation support system, complete in place, shall rest with the Contractor. Any work done, including incidental construction, which is not acceptable for the intended purpose shall be either repaired or removed and reconstructed by the Contractor at his expense.

H. The Contractor shall be solely responsible for repairing all damage associated with installation, performance, and removal of the excavation support system.

END OF SECTION

O:\Quincy MA\FY 2016 Water Main Project\Design\Specifications\02252 Support of Excavation.docx

SECTION 02300

EARTHWORK

PART 1 - GENERAL

1.01 WORK INCLUDED:

The Contractor shall make excavations of normal depth in earth for trenches and structures, shall backfill and compact such excavations to the extent necessary, shall furnish the necessary material and construct embankments and fills, and shall make miscellaneous earth excavations and do miscellaneous grading.

1.02 RELATED WORK:

A. Section 00890, PERMITS

B. Section 01110, CONTROL OF WORK AND MATERIALS

C. Section 01570, ENVIRONMENTAL PROTECTION

D. Section 02240, DEWATERING

E. Section 02252, SUPPORT OF EXCAVATION

F. Section 02324, ROCK EXCAVATION AND DISPOSAL

G. Section 02745, PAVING

H. Section 02920, LOAMING AND SEEDING

1.03 REFERENCES:

American Society for Testing and Materials (ASTM)

ASTM	C131	Test Method for Resistance to Degradation of Small Size Coarse Aggregate by Abrasion and Impact in the Los Angeles Machine.
ASTM	C136	Method for Sieve Analysis of Fine and Coarse Aggregates.
ASTM	C330	Specification for Lightweight Aggregate for Structural Concrete.
ASTM	D1556	Test Method for Density of Soil in Place by the Sand Cone Method.

ASTM	D1557	Test Methods for Moisture-density Relations of Soils and Soil Aggregate Mixtures Using Ten-pound (10 Lb.) Hammer and Eighteen-inch (18") Drop.
ASTM	D2922	Test Methods for Density of Soil and Soil-aggregate in Place by Nuclear Methods (Shallow Depth).

Massachusetts Department of Transportation (MassDOT) Standard Specifications for Highways and Bridges.

Code of Massachusetts Regulations (CMR) 310.40.0032 Contaminated Media and Contaminated Debris

Code of Massachusetts Regulations (CMR) 520 CMR 14.00 Excavation & Trench Safety Regulation

1.04 SUBMITTALS: IN ACCORDANCE WITH REQUIREMENTS OF GENERAL SPECIFICATIONS, SUBMIT THE FOLLOWING:

Samples of all materials proposed for the project shall be submitted to the Engineer for review. Size of the samples shall be as approved by the Engineer.

1.05 PROTECTION OF EXISTING PROPERTY:

A. The work shall be executed in such manner as to prevent any damage to facilities at the site and adjacent property and existing improvements, such as but not limited to streets, curbs, paving, service utility lines, structures, monuments, bench marks, observation wells, and other public or private property. Protect existing improvements from damage caused by settlement, lateral movements, undermining, washout and other hazards created by earthwork operations.

B. In case of any damage or injury caused in the performance of the work, the Contractor shall, at its own expense, make good such damage or injury to the satisfaction of, and without cost to, the Owner. Existing roads, sidewalks, and curbs damaged during the project work shall be repaired or replaced to at least the condition that existed at the start of operations. The Contractor shall replace, at his own cost, existing benchmarks, observation wells, monuments, and other reference points, which are disturbed or destroyed.

C. Buried drainage structures and pipes, observation wells and piezometers, including those which project less than eighteen inches (18") above grade, which are subject to damage from construction equipment shall be clearly marked to indicate the hazard. Markers shall indicate limits of danger areas, by means which will be clearly visible to operators of trucks and other construction equipment, and shall be maintained at all times until completion of project.

1.06 DRAINAGE:

A. The Contractor shall provide, at its own expense, adequate drainage facilities to complete all work items in an acceptable manner. Drainage shall be done in a manner so that runoff will not adversely affect construction procedures or cause excessive disturbance of underlying natural ground or abutting properties.

1.07 FROST PROTECTION AND SNOW REMOVAL:

A. The Contractor shall, at its own expense, keep earthwork operations clear and free of accumulations of snow as required to carry out the work.

B. The Contractor shall protect the subgrade beneath new structures and pipes from frost penetration when freezing temperatures are expected.

PART 2 - PRODUCTS

2.01 MATERIALS:

A. GRAVEL BORROW:

Gravel Borrow shall satisfy the requirements listed in MassDOT Specification Section M1.03.0, Type b.

B. CRUSHED STONE:

Crushed stone shall satisfy the requirements listed in MassDOT Specification SectionM2.01.

C. SAND BORROW:

Sand Borrow shall satisfy the requirements listed in MassDOT Specification Section M1.04.0.

D. PEASTONE:

Peastone shall be smooth, hard, naturally occurring, rounded stone meeting the following gradation requirements:

Passing 5/8 inch square sieve opening	-	100%
Passing No. 8 sieve opening	-	0%

E. BACKFILL MATERIALS:

1. Class B Backfill:

Class B backfill shall be granular, well graded friable soil; free of rubbish, ice, snow, tree stumps, roots, clay and organic matter; with 30 percent or less passing the No. 200 sieve; no stone greater than two-third (2/3) loose lift thickness, or six inches, whichever is smaller.

2. Select Backfill:

Select backfill shall be granular, well graded friable soil, free of rubbish, ice, snow, tree stumps, roots, clay and organic matter, and other deleterious or organic material; graded within the following limits:

Sieve Size	Percent Finer by Weight
3-inch	100
No. 10	30-95
No. 40	10-70
No. 200	0-10

F. PROCESSED GRAVEL:

1. Processed gravel shall consist of inert material that is hard, durable stone and coarse sand, free from loam and clay, surface coatings and deleterious materials. The coarse aggregate shall have a percentage of wear, by the Los Angeles Abrasion Test, of not more than 50.

2. The gradation shall meet the following requirements:

Sieve Designation	Percentage Passing
3-in.	100
1 ½-in.	70-100
¾-in.	50-85
No. 4	30-60
No. 200	0-10

3. The approved source of bank-run gravel material shall be processed by mechanical means. The equipment for producing crushed gravel shall be of adequate size with sufficient adjustments to produce the desired materials. The processed material shall be stockpiled in such a manner to minimize segregation of particle sizes. All processed gravel shall come from approved stockpiles.

PART 3 - EXECUTION

3.01 DISTURBANCE OF EXCAVATED AND FILLED AREAS DURING CONSTRUCTION:

A. Contractor shall take the necessary steps to avoid disturbance of subgrade during excavation and filling operations, including restricting the use of certain types of construction equipment and their movement over sensitive or unstable materials, dewatering and other acceptable control measures.

B. All excavated or filled areas disturbed during construction, all loose or saturated soil, and other areas that will not meet compaction requirements as specified herein shall be removed and replaced with a minimum 12-inch layer of compacted crushed stone wrapped all around in non-woven filter fabric. Costs of removal and replacement shall be borne by the Contractor.

C. The Contractor shall place a minimum of 12-inch layer of special bedding materials and crushed stone wrapped in filter fabric over the natural underlying soil to stabilize areas which may become disturbed as a result of rain, surface water runoff or groundwater seepage pressures, all at no additional cost to the Owner. The Contractor also has the option of drying materials in-place and compacting to specified densities.

3.02 EXCAVATION:

A. GENERAL:

1. The Contractor shall perform all work of any nature and description required to accomplish the work as shown on the Drawings and as specified.

2. Excavations, unless otherwise required by the Engineer, shall be carried only to the depths and limits shown on the Drawings. If unauthorized excavation is carried out below required subgrade and/or beyond minimum lateral limits shown on Drawings, it shall be backfilled with gravel borrow and compacted at the Contractor's expense as specified below, except as otherwise indicated. Excavations shall be kept in dry and good conditions at all times, and all voids shall be filled to the satisfaction of the Engineer.

3. In all excavation areas, the Contractor shall strip the surficial topsoil layer and underlying subsoil layer separate from underlying soils. In paved areas, the Contractor shall first cut pavement as specified in paragraph 3.02 B.1 of this specification, strip pavement and pavement subbase separately from underlying soils. All excavated materials shall be stockpiled separately from each other within the limits of work.

4. The Contractor shall follow a construction procedure, which permits visual identification of stable natural ground. Where groundwater is encountered, the size of the open excavation shall be limited to that which can be handled by the

Contractor's chosen method of dewatering and which will allow visual observation of the bottom and backfill in the dry.

5. The Contractor shall excavate unsuitable materials to stable natural ground where encountered at proposed excavation subgrade, as required by the Engineer. Unsuitable material includes topsoil, loam, peat, other organic materials, snow, ice, and trash. Unless specified elsewhere or otherwise required by the Engineer, areas where unsuitable materials have been excavated to stable ground shall be backfilled with compacted special bedding materials or crushed stone wrapped all around in non-woven filter fabric.

B. TRENCHES:

1. Prior to excavation, trenches in pavement shall have the traveled way surface cut in a straight line by a concrete saw or equivalent method, to the full depth of pavement. Excavation shall only be between these cuts. Excavation support shall be provided as required to avoid undermining of pavement. Cutting operations shall not be done by ripping equipment.

2. The Contractor shall satisfy all dewatering requirements specified in Section 02240 DEWATERING, before performing trench excavations.

3. Trenches shall be excavated to such depths as will permit the pipe to be laid at the elevations, slopes, and depths of cover indicated on the Drawings. Trench widths shall be as shown on the Drawings or as specified.

4. Where pipe is to be laid in bedding material, the trench may be excavated by machinery to, or just below, the designated subgrade provided that the material remaining in the bottom of the trench is not disturbed.

5. If pipe is to be laid in embankments or other recently filled areas, the fill material shall first be placed to a height of at least 12-inches above the top of the pipe before excavation.

6. Pipe trenches shall be made as narrow as practicable and shall not be widened by scraping or loosening materials from the sides. Every effort shall be made to keep the sides of the trenches firm and undisturbed until backfilling has been completed.

7. If, in the opinion of the Engineer, the subgrade, during trench excavation, has been disturbed as a result of rain, surface water runoff or groundwater seepage pressures, the Contractor shall remove such disturbed subgrade to a minimum of 12-inches and replace with crushed stone wrapped in filter fabric. Cost of removal and replacement shall be borne by the Contractor.

8. The Contractor shall obtain a trench permit from the municipality where the trench is located prior to making any excavations of trenches (any subsurface excavation

greater than three (3) feet in depth and fifteen (15) feet or less between soil walls as measured from the bottom).

9. All trenches required to be permitted must be attended, covered, barricaded, or backfilled. Covers must be road plates at least ¾-inch thick or equivalent, barricades must be fences at least 6-feet high with no openings greater than 4-inches between vertical supports and all horizontal supports required to be located on the trench-side of the fencing.

C. BUILDING AND FOUNDATION EXCAVATION:

1. Excavations shall not be wider than required to set, brace, and remove forms for concrete, or perform other necessary work.

2. After the excavation has been made, and before forms are set for footings, mats, slabs, or other structures, and before reinforcing is placed, all loose or disturbed material shall be removed from the subgrade. The bearing surface shall then be compacted to meet the requirements of this specification.

3. If, in the opinion of the Engineer, the existing material at subgrade elevation is unsuitable for structural support, the Contractor shall excavate and dispose of the unsuitable material to the required width and depth as required by the Engineer. If, in the opinion of the Engineer, filter fabric is required; the Contractor shall place filter fabric, approved by the Engineer, as per manufacturer's recommendations. Crushed stone shall then be placed in lifts and compacted to required densities. Backfill shall be placed to the bottom of the proposed excavation.

D. EXCAVATION NEAR EXISTING STRUCTURES:

1. Attention is directed to the fact that there are pipes, manholes, drains, and other utilities in certain locations. An attempt has been made to locate all utilities on the drawings, but the completeness or accuracy of the given information is not guaranteed.

2. As the excavation approaches pipes, conduits, or other underground structures, digging by machinery shall be discontinued and excavation shall be done by means of hand tools, as required. Such manual excavation, when incidental to normal excavation, shall be included in the work to be done under items involving normal excavation.

3. Where determination of the exact location of a pipe or other underground structure is necessary for properly performing the work, the Contractor shall excavate test pits to determine the locations.

3.03 BACKFILL PLACEMENT AND COMPACTION:

A. GENERAL:

1. Prior to backfilling, the Contractor shall compact the exposed natural subgrade to the densities as specified herein.

2. After approval of subgrade by the Engineer, the Contractor shall backfill areas to required contours and elevations with specified materials.

3. The Contractor shall place and compact materials to the specified density in continuous horizontal layers, not to exceed nine (9) inches in uncompacted lifts. The degree of compaction shall be based on maximum dry density as determined by ASTM Test D1557, Method C. The minimum degree of compaction for fill placed shall be as follows:

Location	Percent of Maximum Density
Below pipe centerline	95
Above pipe centerline	92
Below pavement (upper 3 ft.)	95
Embankments	95
Below pipe in embankments	95
Adjacent to structures	92
Below structures	95

4. The Engineer reserves the right to test backfill for conformance to the specifications and Contractor shall assist as required to obtain the information. Compaction testing will be performed by the Engineer or by an inspection laboratory designated by the Engineer, engaged and paid for by the Owner. If test results indicate work does not conform to specification requirements, the Contractor shall remove or correct the defective Work by recompacting where appropriate or replacing as necessary and approved by the Engineer, to bring the work into compliance, at no additional cost to the Owner. All backfilled materials under structures and buildings shall be field tested for compliance with the requirements of this specification.

5. Where horizontal layers meet a rising slope, the Contractor shall key each layer by benching into the slope.

6. If the material removed from the excavation is suitable for backfill with the exception that it contains stones larger than permitted, the Contractor has the option to remove the oversized stones and use the material for backfill or to provide replacement backfill at no additional cost to the Owner.

7. The Contractor shall remove loam and topsoil, loose vegetation, stumps, large roots, etc., from areas upon which embankments will be built or areas where material will be placed for grading. The subgrade shall be shaped as indicated on

the Drawings and shall be prepared by forking, furrowing, or plowing so that the first layer of the fill material placed on the subgrade will be well bonded to the subgrade.

B. TRENCHES:

1. Bedding as detailed and specified shall be furnished and installed beneath the pipeline prior to placement of the pipeline. A minimum bedding thickness shall be maintained between the pipe and undisturbed material, as shown on the Drawings.

2. As soon as practicable after pipes have been laid, backfilling shall be started.

3. Unless otherwise indicated on the Drawings, select backfill shall be placed by hand shovel in 6-inch thick lifts up to a minimum level of 12-inches above the top of pipe. This area of backfill is considered the zone around the pipe and shall be thoroughly compacted before the remainder of the trench is backfilled. Compaction of each lift in the zone around the pipe shall be done by use of power-driven tampers weighing at least 20 pounds or by vibratory compactors. Care shall be taken that material close to the bank, as well as in all other portions of the trench, is thoroughly compacted to densities required.

4. Class B backfill shall be placed from the top of the select backfill to the specified material at grade (loam, pavement subbase, etc.). Fill compaction shall meet the density requirements of this specification.

5. Water Jetting:

   a. Water jetting may be used when the backfill material contains less than 10 percent passing the number 200 sieve, but shall be used only if approved by the Engineer.

   b. Contractor shall submit a detailed plan describing the procedures he intends to use for water jetting to the Engineer for approval prior to any water jetting taking place.

   c. Compaction of backfill placed by water jetting shall conform to the requirements of this specification.

6. If the materials above the trench bottom are unsuitable for backfill, the Contractor shall furnish and place backfill materials meeting the requirements for trench backfill, as shown on the drawings or specified herein.

7. Should the Engineer order crushed stone for utility supports or for other purposes, the Contractor shall furnish and install the crushed stone as directed.

8. In shoulders of streets and road, the top 12-inch layer of trench backfill shall consist of processed gravel for sub-base, satisfying the requirements listed in MassDOT standard specification M1.03.1.

C. BACKFILLING UNDER BUILDINGS AND FOUNDATIONS:

Material to be used as structural fill under structures shall be special bedding material or gravel borrow, as shown on the Drawings or as required by the Engineer. Where gravel borrow fill is required to support proposed footings, walls, slabs, and other structures, the material shall be placed in a manner accepted by the Engineer. Compaction of each lift shall meet the density requirements of this specification.

D. BACKFILLING ADJACENT TO STRUCTURES:

1. The Contractor shall not place backfill against or on structures until they have attained sufficient strength to support the loads to which they will be subjected. Excavated material approved by the Engineer may be used in backfilling around structures. Backfill material shall be thoroughly compacted to meet the requirements of this specification.

2. Contractor shall use extra care when compacting adjacent to pipes and drainage structures. Backfill and compaction shall proceed along sides of drainage structures so that the difference in top of fill level on any side of the structure shall not exceed two feet (2') at any stage of construction.

3. Where backfill is to be placed on only one side of a structural wall, only hand-operated roller or plate compactors shall be used within a lateral distance of five feet (5') of the wall for walls less than fifteen feet (15') high and within ten feet (10') of the wall for walls more than fifteen feet (15') high.

3.04 DISPOSAL OF SURPLUS MATERIALS:

A. Surplus excavated materials, which are acceptable to the Engineer, shall be used to backfill normal excavations in rock or to replace other materials unacceptable for use as backfill. Upon written approval of the Engineer, surplus excavated materials shall be neatly deposited and graded so as to make or widen fills, flatten side slopes, or fill depressions; or shall be neatly deposited for other purposes as indicated by the Owner, within its jurisdictional limits; all at no additional cost to the Owner.

B. Surplus excavated material not needed as specified above shall be hauled away and disposed of by the Contractor at no additional cost to the Owner, at appropriate locations, and in accordance with arrangements made by him. Disposal of all rubble shall be in accordance with all applicable local, state and federal regulations.

C. No excavated material shall be removed from the site of the work or disposed of by the Contractor unless approved by the Engineer.

D. The Contractor shall comply with Massachusetts regulations (310 CMR 40.0032) that govern the removal and disposal of surplus excavated materials. Materials, including contaminated soils, having concentrations of oil or hazardous materials less than an otherwise Reportable Concentration and that are not a hazardous waste, may not be disposed of at locations where concentrations of oil and/or hazardous material at the receiving site are significantly lower than the levels of those oil and /or hazardous materials present in the soil being disposed or reused.

END OF SECTION

O:\Quincy MA\FY 2016 Water Main Project\Design\Specifications\02300 - Earthwork.docx

SECTION 02324

ROCK EXCAVATION AND DISPOSAL

PART 1 - GENERAL

1.01 WORK INCLUDED:

The Contractor shall excavate rock, if encountered, to the lines and grades indicated on the drawings or as required, shall dispose of the excavated material, and shall furnish the required material as specified in Section 02300 EARTHWORK for backfill in place of the excavated rock.

1.02 RELATED WORK:

A. Section 02252, SUPPORT OF EXCAVATION

B. Section 02300, EARTHWORK

C. Section 03302, FIELD CONCRETE

1.03 DEFINITIONS:

A. The word "rock," wherever used as the name of the excavated material or material to be excavated, shall mean only boulders and pieces of concrete or masonry exceeding one cubic yard* in volume, or solid ledge rock which, in the opinion of the Engineer, requires for its removal, drilling and blasting, wedging, sledging, barring, or breaking up with a power-operated tool. No soft or disintegrated rock which can be removed by normal earth excavation methods, no loose, shaken, or previously blasted rock or broken stone in rock fillings or elsewhere, and no rock exterior to the maximum limits of measurement allowed, which may fall into the excavation, will be measured or allowed as "rock."

B. The word "earth," wherever used as the name of an excavated material, or material to be excavated shall mean all kinds of material other than rock as above defined.

1.04 QUALITY ASSURANCE:

A. The Contractor shall conform to all municipal ordinances and state and federal laws relating to the transportation, storage, handling, and use of explosives. In the event that any of the above mentioned laws, ordinances, or regulations require a licensed blaster to perform or supervise the work of blasting, said licensed blaster shall, at all times, have his license on the work site and shall permit examination thereof by the Engineer or other officials having jurisdiction.

B. The Contractor shall procure all permits required for blasting.

1.05 SUBMITTALS:

A. At least two weeks before beginning blasting operations, the Contractor shall submit to the Engineer for record the following data:

1. Name of Contractor or Subcontractor responsible for blasting and monitoring operations and license number.

2. Name, affiliation, and license number of the person or persons who will be directly responsible for designing each blast, supervising the loading of the shot, and firing it.

B. Copies of all permits required for blasting.

C. Results of pre-blast survey.

D. When blasting is in progress, daily reports on blasting operations and blast monitoring results.

1.06 DELIVERY/STORAGE AND HANDLING:

Delivery, storage and handling of explosives shall conform to all federal, state and local regulations and permits.

PART 2 - PRODUCTS - NOT APPLICABLE

PART 3 - EXECUTION

3.01 PREPARATION/PRE-BLAST SURVEY

If required, the pre-blast survey shall be conducted in accordance with state regulations and/or local permit requirements.

3.02 EXCAVATION:

A. The Contractor shall excavate rock to the lines and grades indicated on the drawings or as required by the Engineer. The excavated rock shall be removed and disposed of by the Contractor as specified for surplus excavated materials under Section 02300, EARTHWORK.

B. Work damaged by blasting shall be repaired or replaced at the Contractor's expense.

C. If rock is excavated beyond the limits of payment indicated on the drawings, specified, or authorized in writing by the Engineer, the excess excavation, whether resulting from overbreakage or other causes, shall be backfilled, by and at the expense of the Contractor, as specified below:

1. In pipe trenches, excess excavation shall be filled with the required material and compacted in the same manner as specified for the material in the zone around the pipe under Section 02300 EARTHWORK.

2. In excavations for structures, excess excavation in the rock beneath foundations shall be filled with concrete which shall have a minimum 28-day compressive strength of 3000 psi. Other excess excavation shall be filled with Class B backfill compacted to a minimum of 92 percent density (ASTM D1557 Method C) as specified under Section 02300, EARTHWORK.

3. If the rock below normal depth is shattered due to drilling or blasting operations of the Contractor, and the Engineer considers such shattered rock to be unfit for foundations, the shattered rock shall be removed and the excavation shall be backfilled with concrete as required, except that in pipe trenches crushed stone may be used for backfill, if approved. All such removal and backfilling shall be done by and at the expense of the Contractor.

D. When required by the Engineer, the Contractor shall remove all dirt and loose rock from designated areas and shall clean the surface of the rock thoroughly to determine whether seams or other defects exist.

E. When concrete is to be placed on rock, the rock shall be free of all vegetation, dirt, sand, clay, boulders, scale, excessively cracked rock, loose fragments, water, ice, snow, and other objectionable substances.

3.03 VIBRATION AND AIR BLAST MONITORING:

A. The Contractor shall measure air blast and vibration levels of blasting operations to assure compliance with all applicable regulations and local permits.

B. Records of each day's air blast and vibration measurements shall be submitted to the Engineer in writing no later than the start of the next day's work. Records shall include, as a minimum:

- Identification of instrument
- Name of observer
- Name of interpreter
- Distance and direction of recording station from the area of detonation
- Date and exact time of reading
- Type of ground at recording station

- Peak particle velocity for all components as well as resultant for all frequencies of vibrations

- Duration of motion with a velocity in excess of one thousandth of an inch per second

- A copy of the photographic record of seismograph readings

- Peak air blast level.

3.04 BLASTING RECORDS:

The Contractor shall prepare and submit to the Engineer daily blast reports, including logs of each blast. Reports shall be submitted to the Engineer no later than the start of the next day's work. However, during each day of blasting, the Contractor shall review and shall provide access for the Engineer to review the data from that day's blasting. Reports after each blast shall include at least the following information for each blast:

- Date, time, and location of blast

- Permit number and expiration date

- Amount and type of explosives used by weight and number of cartridges

- Total number of delays used and number of holes used for each delay

- On a diagram of the blast pattern, indicate total number and depth of holes, maximum charge per delay, maximum charge per hole, and corresponding delay number

- An evaluation of the blast indicating areas of significant overbreak, unusual results, and any recommended adjustments for the next blast.

3.05 POST BLASTING INSPECTIONS:

The Contractor shall examine any properties, structures, and conditions where complaints of damage have been received or damage claims have been filed. Advance notice shall be given to all interested parties so that the parties may be present during the final examination. Records of the final examination shall be signed and distributed to the owner of the property, the head of the local fire department, and the Engineer.

END OF SECTION

O:\Quincy MA\FY 2016 Water Main Project\Design\Specifications\02324 Rock Excavation and Disposal.docx

SECTION 02511

TEMPORARY WATER SERVICE

PART 1 - GENERAL

1.01 WORK INCLUDED:

A. The Contractor shall furnish, install, maintain, and remove temporary water service pipe of the size required from which connections shall be made to all water customers. The temporary water system shall consist of mains, services and fire department outlets adequately sized to provide uninterrupted water and fire service to all water customers. Temporary service pipe shall not be installed without prior approval of the Engineer.

B. The Contractor shall do all excavating for connections of temporary service pipes to existing live water mains and services, make and maintain all such connections and reinstate them to the new water main upon completion of the required disinfection and testing. The Contractor shall also furnish, install, maintain, connect, disconnect, and remove individual temporary service lines to all water customers.

1.02 REFERENCES:

The following standard forms a part of this specification, as referenced:

American Water Works Association (AWWA)

AWWA C651 Disinfecting Water Mains

1.03 SUBMITTALS: IN ACCORDANCE WITH REQUIREMENTS OF THE GENERAL SPECIFICATIONS, SUBMIT THE FOLLOWING:

Shop drawings shall consist of manufacturer's scale drawings, cuts, or catalogs including descriptive literature. Shop drawings shall be submitted for the pipe, type of joint, fittings, couplings, and valves. A plan of the temporary bypass system, showing location and size of all pipelines, services and fire department outlets, shall be submitted to the Engineer for review prior to installation of the bypass system.

PART 2 - PRODUCTS

2.01 The temporary service pipe, connections, and branches shall be of the highest quality and shall be fully adequate to withstand the pressures and all conditions of use. The temporary service shall be made of fused-joint HDPE, steel or PVC suitable for above-ground use. The installation shall be watertight.

PART 3 - EXECUTION

3.01 RESPONSIBILITIES:

A. Before starting any work that will affect service to customers, the Contractor shall notify the Owner at least 48 hours in advance to allow the time to notify the customers accordingly.

B. The Owner shall shut off curb stops or pull water meters on individual services after the Contractor has installed temporary services to the satisfaction of the Engineer and prior to the Contractor starting work which will affect service to customers.

C. The Contractor shall be responsible for all repairs and maintenance required to the temporary services. The Contractor shall immediately repair and/or replace any leaking or faulty temporary service pipe as ordered by the Engineer.

D. The work of providing suitable safety precautions to prevent any interruptions of water service during the temporary service period, including taking any steps necessary to prevent freezing, shall be the responsibility of the Contractor. If freezing does occur, the Contractor shall thaw the lines, make any necessary repairs, and promptly restore temporary service.

E. Before placing the temporary water pipe into service, a representative from the local Fire Department shall inspect any connections to existing fire hydrants, the placement of emergency fire connections, and shall be familiar with the operation of the emergency fire connections. The Contractor shall make any adjustments to the layout of the temporary water piping and hydrants requested by the local Fire Department. The Contractor shall provide any tools required to operate the emergency fire connections to the Fire Department. The Fire Department shall be contacted at least 48 hours in advance of placing the temporary water pipe into service

3.02 INSTALLATION:

A. Generally, temporary service pipe shall be laid in gutters or several feet back from the edge of pavement. At driveways, crossings over the pipe shall be made by hot-mix pavement berm, wood or rubber mat ramp or other approved method. At street intersections and road crossings, pipe shall be laid in a shallow trench covered with temporary surfacing.

B. All service pipe shall be suitably valved to meet the approval of the Engineer. Line valves shall be located at all intersecting streets but no further than 1,000 feet apart.

C. Suitably threaded 2-1/2-inch valved emergency fire connections shall be installed and maintained adjacent to each fire hydrant which is scheduled to be out of service. Hydrant nozzle caps shall be placed on all emergency fire connections.

D. Temporary connections to live hydrants or water mains shall be of the same size as the temporary pipe that they feed. No restrictions or reduction in size will be allowed.

E. All hydrants that are out of service shall be covered with burlap bags, securely held in place.

F. The Contractor shall be responsible for all consumer connections. The connection shall be made via a temporary hose from the temporary main to a suitable location in the house; via a temporary pipe or hose from the temporary main to the meter pit, if one exists; or by making a below-ground connection at the street edge to the existing service.

G. The Owner shall enter all private property and assist the Contractor in making or removing temporary service connections. The Contractor shall notify the Owner at least 48 hours in advance so that personnel may be available when required.

H. All service connections shall be valved at the temporary service pipe.

I. See Section 02745 - PAVING, for both temporary and permanent paving over the temporary service pipe trench.

J. The temporary water main driveway crossings shall have compacted gravel placed on top for a smooth transition which will be maintained during the entire duration of the temporary water main.

K. The temporary water main roadway crossings shall be set below grade and covered with temporary hot asphalt which will be maintained during the entire duration of the temporary water main.

3.03 DISINFECTING AND FLUSHING:

A. The Contractor shall disinfect the temporary mains and services carrying temporary water.

B. The Contractor shall furnish all equipment and materials necessary to do the work of disinfecting, and shall perform the work in accordance with the procedure outlined in AWWA C651 and all amendments thereto.

C. In general, the procedure of disinfecting the main shall be to apply the chlorine through a tap in one end of the section and bleed off through a tap at the other end.

D. The applied dosage shall be such as to produce a chlorine concentration of not less than 10 mg/l after a contact time of not less than 24 hours.

E. During the disinfection period, care shall be exercised to prevent contamination of water in existing mains.

F. Any temporary connection to the mains or other facilities required to accomplish the disinfection of the mains as described below, shall be at the Contractor's expense.

G. After treatment, the main shall be flushed with clean water until the residual chlorine concentration is less than 0.2 mg/l.

H. The Contractor shall dispose of the water used in disinfecting and flushing in an approved manner.

I. Bacteriological sampling and testing shall be done by the Contractor in accordance with AWWA C651 for each main and each branch. Sampling shall be accomplished with sterile bottles treated with sodium thiosulfate, as required by Standard Methods. No hose or fire hydrants shall be used in collection of samples. A corporation stop installed on the main, with a removable copper tube gooseneck assembly, is the recommended method.

J. Testing shall be done in accordance with Standard Methods by an Engineer approved laboratory certified by Massachusetts Department of Environmental Protection for total and fecal coliform analysis of potable water and shall show the absence of coliform organisms. A standard plate count may be required at the option of the Engineer.

K. The Contractor shall handle all sampling and coordinating of testing of such samples through a laboratory approved by the Engineer.

END OF SECTION

O:\Quincy MA\FY 2016 Water Main Project\Design\Specifications\02511 - Temporary Water Service.docx

SECTION 02513

INSULATION FOR PIPELINES

PART 1 - GENERAL

1.01 WORK INCLUDED:

This Section covers the furnishing of all material, accessories, labor, and equipment necessary to insulate the pipelines where shown on the drawings and where so required by the Engineer.

1.02 RELATED WORK:

A. Section 02080, DUCTILE IRON PIPE AND FITTINGS

B. Section 02300, EARTHWORK

1.03 REFERENCES:

A. The following standards form a part of this specification as referenced:

American Society for Testing and Materials (ASTM)

ASTM	C552	Specification for Cellular Glass Block and Pipe Thermal Insulation

1.04 SUBMITTALS: IN ACCORDANCE WITH REQUIREMENTS OF GENERAL SPECIFICATIONS, SUBMIT THE FOLLOWING:

A. Six sets of manufacturer's literature of the materials of this section and installation instructions for the products being provided for the project shall be submitted to the Engineer for review.

B. A sample of the insulation shall be submitted to the Engineer.

PART 2 - PRODUCTS

2.01 INSULATION: DIRECT BURIED PIPE

A. Insulation shall be cellular glass type. The insulation shall be a cellular glass product that is made specifically for thermal insulation of piping and is compatible with the piping material. Insulation shall be a minimum of 2- inches thick, unless otherwise shown on the drawings.

B. Insulation shall be composed of all glass sealed cells having no binders or fillers. The completed product shall be rigid and impermeable, with an ultimate compressive strength of at least 90 psi. The thermal conductivity of the cellular glass shall be no higher than 0.29 BTU-in./hr • ft^2 • ºF @ 75ºF and 0.28 BTU-in./hr • ft^2 • ºF @ 50ºF.

C. The cellular glass insulation shall comply with all requirements of ASTM C552. The cellular glass shall be fabricated in half sections whenever possible.

D. Bands for securing the insulation to the pipe shall be 0.5 inches wide by 0.020 inches thick made of stainless steel.

E. The jacketing for the insulation shall be one of the following methods:

1. A 125 mil (3mm) thick, heat sealed high polymer asphaltic membrane with an integral glass scrim and integral 1 mil (.02mm) aluminum foil and a thin Mylar film on the surface, equal to Pittwrap Jacketing as manufactured by Pittsburgh Corning or equal.
2. Mastic - asphalt cutback mastic, equal to Pittcote 300 Finish, as manufactured by Pittsburgh Corning or equal.
3. Reinforcing fabric - an open mesh polyester fabric with a 6 x 5.5 mesh/inch configuration, equal to PC Fabric 79, as manufactured by Pittsburgh Corning or equal.

F. The insulation shall be "Foamglass" with jacketing as manufactured by Pittsburgh Corning Corporation, Pittsburgh, PA, or an approved equal. A minimum of 6" layer of fine sand shall surround the insulated pipe before rock free backfill is used in the trench.

G. The Foamglass and jacketing shall be installed per the manufacturer instructions included in the approved shop drawings.

H. Tees, valves, and bends shall be covered with form fitting factory made sections.

PART 3 - EXECUTION

3.01 INSTALLATION:

A. Cellular glass shall not be applied to the piping until the piping has been wiped clean and supported so that there is adequate space to apply the full thickness of insulation and the covering completely around the pipe. The Contractor must obtain the Engineer’s approval before the installation begins.

B. Cellular glass insulation and jacketing shall be applied in accordance with the manufacturers installation procedures included in the approved shop drawings.

C. There shall be at least three 0.50-inch wide stainless steel bands secured around each joint and these bands shall be placed not over 9 inches on center on straight sections of pipe.

D. Tees, valves, and bends shall be covered with form fitting factory made sections.

E. All testing of the piping system, such as hydrostatic, x-ray or other such testing, shall be accomplished prior to application of insulation.

END OF SECTION

O:\Quincy MA\FY 2016 Water Main Project\Design\Specifications\02513 Insulation for Pipelines.docx

SECTION 02514

HYDRANTS AND VALVES

PART 1 - GENERAL

1.01 WORK INCLUDED:

A. This Section covers the furnishing and installation of all outside hydrants, valves and appurtenances as indicated on the drawings and as specified herein.

B. Pipe and couplings shall be specified under the appropriate pipe sections.

1.02 RELATED WORK:

A. Section 02080, DUCTILE IRON PIPE AND FITTINGS FOR WATER MAINS

B. Section 02300, EARTHWORK

C. Section 02516, CONNECTIONS TO EXISTING WATER MAINS

1.03 REFERENCES:

A. The following standards form a part of this specification:

American Society for Testing and Materials (ASTM)

ASTM	A48	Gray Iron Castings
ASTM	Al26	Gray Iron Castings for Valves, Flanges, and Pipe Fittings
ASTM	A536	Ductile Iron Castings
ASTM	B62	Composition Bronze or Ounce Metal Castings
ASTM	D429	Test Method for Rubber Property Adhesion to Rigid Substrate.

American Water Works Association (AWWA)

AWWA	C500	Metal Seated Gate Valves For Water Supply Service
AWWA	C502	Dry-Barrel Fire Hydrants
AWWA	C504	Rubber-Seated Butterfly Valves
AWWA	C509	Resilient-Seated Gate Valves for Water Supply Service

AWWA	C515	Reduced Wall, Resilient-Seated Gate Valves for Water Supply Service
AWWA	C550	Protective Interior Coatings for Valves and Hydrants

Federal Specifications (FS)

FS	TT-V-51F	Varnish, Asphalt

1.04 SUBMITTALS: IN ACCORDANCE WITH REQUIREMENTS OF THE GENERAL SPECIFICATIONS, SUBMIT THE FOLLOWING:

A. Shop drawings shall be submitted for the hydrants, valves and appurtenances indicating type of joint, and lining and coating, etc., in accordance with the specifications.

B. Shop drawings shall consist of manufacturer's scale drawings, cuts or catalogs including descriptive literature and complete characteristics and specifications, and code requirements.

C. Refer to Paragraph 3.01.A for Affidavit of Compliance required to be submitted**.**

PART 2 - PRODUCTS

2.01 GENERAL:

A. Valves shall open right (clockwise).

B. Hydrants shall open right (clockwise).

2.02 HYDRANTS:

A. Hydrants shall conform to the requirements of AWWA C502. They shall be equipped with a 5-1/4-inch main valve and 6-inch mechanical joint inlet.

B. Hydrants shall have one 4-1/2-inch pumper and two 2-1/2- inch hose connections. Threads shall be NST.

C. Hydrant operating and nozzle cap nuts shall be of pentagonal shape and measure one and one half inches from flat to point. The height of the nut shall not be less than one inch.

D. All internal operating parts including main valve, main valve seat, drain valve mechanism, operating rod, etc., shall be removable without excavating.

E. Main valve seats shall be made of brass or bronze, and shall screw into a seat ring or sub-seat, which shall also be made of brass or bronze.

F. Hydrant nozzle caps shall be furnished with Buna N rubber washers.

G. Hydrants shall be traffic models with frangible bolts or breakaway couplings. Details of hydrant design shall meet the requirements of the Owner.

H. For purposes of standardization, hydrants shall be Mueller "Super Centurion," Model 250 as manufactured by Mueller Co., Decatur, IL; or Darling B-62-B, as manufactured by American Flow Control, Beaumont, TX; or approved equal.

2.03 HYDRANT PAINT:

A. Hydrants shall be thoroughly cleaned and given two shop or field coats of paint in accordance with AWWA C502 and the instructions of the paint manufacturer. Paint color shall be the standard hydrant color of the Owner as follows:

1. Barrel - **OSHA yellow**
2. Bonnet - **16 inch Water Main -Blue**
   12 Inch Water Main -Green
   8-inch Water Main -Grey
   6-inch Water Main -Orange

B. If the hydrants are delivered with the Owner's standard color, they shall be given one matching field coat of an alkyd gloss enamel. If the hydrants are not delivered with the Owner's standard color, they shall be given two coats of an alkyd gloss enamel, colors as indicated above.

C. Hydrant paint shall be as manufactured by Sherwin-Williams, Cleveland, OH; Tnemec Company, Inc., Kansas City, MO; or Minnesota Mining and Manufacturing Co. (3M), St. Paul, MN; or approval equal.

D. Alkyd gloss enamel shall be 801 DTM by Sherwin-Williams, 2H-Tneme by Tnemec; or approved equal. Reflective paint shall be Scotchlite #7211 by 3M.

2.04 RESILIENT SEAT GATE VALVES:

A. Resilient seat, wedge type gate valves shall be manufactured to meet all applicable requirements of AWWA C509 or AWWA C515. All valves shall be bubble-tight at 200 psi water working pressure, tested in both directions.

B. Valve bodies shall be of cast or ductile iron and shall have non-rising threaded bronze stems acting through a bronze stem nut. Opening nuts shall be 2-inches square and shall open as specified above. All buried valves shall have mechanical joint ends.

C. Valve wedges shall be of ductile iron with resilient seating surfaces permanently bonded to the wedges in strict accordance with ASTM D429 or attached to the face of the wedges with stainless steel screws. Each valve shall have a smooth, unobstructed water way free from sediment pockets.

D. Valves shall have low friction, torque-reduction thrust bearings. All O-rings and gaskets shall be removable without taking the valves out of service.

E. An NSF 61-approved epoxy coating, which is safe for potable water, shall be applied to exterior and interior valve surfaces.

F. Valves for horizontal applications shall have Delrin wedge covers, and be specifically designed for horizontal installation.

G. Resilient seat gate valves shall be as manufactured by Clow Valve Co., Oskaloosa, IA; Mueller Co., Decatur, IL; American Valve and Hydrant; Birmingham, AL; Waterous Co., S. St. Paul, MN; MH Valve, Anniston, AL; Kennedy Valve, Elmira, NY; or approved equal.

2.05 INSERTION VALVES:

A. Insertion valves shall consist of ductile iron body, bonnet, and wedge constructed in accordance with ASTM A536 Grade 65-45-12 and shall meet or exceed requirements of AWWA C509 and C515 for Resilient Seat Valves suitable for potable water service.

B. The valve shall have a maximum working pressure of 250 PSI and shall conform to all other requirements herein specified for gate valves. The valve gate shall be capable of creating a bubble tight seal, capable of sealing equally well with flow in either direction.

C. Insertion valves shall be furnished with a 2-inch square operating nut and the entire valve body and bonnet shall be coated with a minimum of 8 mils epoxy in compliance with AWWA C550. The entire insertion valves shall be NSF-61 approved, suitable for use in potable water and shall have a non-rising stem.

D. All chips and debris created during installation of the insertion valve shall be flushed outside of the pipe and not into the distribution system.

E. Before backfilling, all exposed portions of bolts used to hold the two halves of the sleeve together shall be heavily coated with two coats of bituminous paint comparable to Inertol No. 66, Special Heavy. Sleeves shall be furnished with a rubber gasket that fits 360 degrees around the pipe at each end.

F. The contractor shall be responsible for verifying the outside diameter of the pipe where the valve will be inserted and the cover over the valve bonnet and operating nut. The valve bonnet and operating nut shall not extend above ground surface and shall be a minimum of 2-feet below grade. Valves shall be capable of working with a standard gate valve box.

G. Insertion valves shall be installed by an installer certified in installing the specific type of insertion valve.

H. Insertion valves shall be as manufactured by Team Industrial Services, Sugarland, TX; Advanced Valve Technologies, Inc., Elk Grove Village, IL; Hydra-Stop, Inc., Blue Island, IL; or approved equal.

2.06 VALVE BOXES AND EXTENSIONS:

A. Valve boxes shall be manufactured in North America. The minimum outside diameter of the boxes shall be 5½-inches and the lengths shall be as necessary to suit the ground elevation and the depth of each valve operator, regardless of the depth of cover.

B. When there is more than 6 feet of cover, valve operators shall have non-rising extension stems which raise the operating nut to a depth of approximately 4 feet below grade. The extension stem shall have a centering support ring at the upper end. The lower socket shall be tapped with a set screw into the valve nut to prevent the extension stem from lifting off the valve nut.

C. Each valve shall be provided with a box which has a close fitting 7-1/4-inch diameter cover and is substantially dirt-tight. The top of the cover shall be flush with the top of the box rim. The word "WATER" shall be cast in the top of the cover.

D. Valve boxes shall be of cast iron and of the adjustable sliding, heavy pattern type. They shall be so designed and constructed as to prevent direct transmission of traffic loads to the pipe or valve. The upper or sliding section of the box shall be provided with a flange on the top of the section (not on the bottom) having sufficient bearing area to prevent undue settlement. The lower section of the box shall be designed to enclose the operating nut and stuffing box of the valve and to rest on the backfill. The boxes shall be adjustable through at least 6 inches vertically without reduction of lap between sections to less than 8-inches.

2.07 POLYETHYLENE ENCASEMENT:

A. Where called for on the drawings, the pipe shall be encased in polyethylene conforming to AWWA C105.

B. Polyethylene encasement shall be either linear low density, minimum 8 mil thick or high density, cross-laminated, minimum 4 mil thick. Polyethylene encasement shall be clearly marked at a minimum of every 2-feet along its length with print that does not contain hazardous material. Markings shall contain manufacturer’s name, manufacture year, AWWA C105, minimum film thickness, and ‘Warning – Corrosion Protection – Repair any damage.’

PART 3 - EXECUTION

3.01 AFFIDAVIT OF COMPLIANCE

A. The manufacturer shall furnish as part of the shop drawing submittal the Engineer with an affidavit stating that valve(s), hydrants conform to the applicable requirements of the

applicable AWWA Standard and the Engineer's specifications, and that all tests specified therein have been performed and all test requirements have been met and the test date.

B. A copy of the Affidavit of Compliance shall be delivered to the construction site attached to each valve and/or hydrant furnished. The Affidavit shall be attached to the valve or hydrant inside a waterproof pouch.

C. Any valve or hydrant received without the required affidavit shall be removed from the project and replaced at no expense to the Owner.

D. All materials shall be certified "NEW". No reconditioned or repaired materials are permitted. Any reconditioned or repaired materials furnished or installed shall be removed and replaced with new materials at no expense to the Owner.

3.02 INSTALLATION:

A. All valves shall be carefully installed and supported in their respective positions free from distortion and strain. Care shall be taken to prevent damage or injury to the valves and appurtenances during handling and installation.

B. All material shall be carefully inspected for defects in workmanship and all debris and foreign material cleaned out of valve openings and seats. All mechanisms shall be operated to check for proper functioning, and all nuts and bolts checked for tightness.

C. Valves and other equipment that do not operate easily or are otherwise defective shall be repaired or replaced at the Contractor's expense.

D. Hydrants shall be set plumb. Earth fill shall be carefully tamped around the hydrants to a distance of 4 feet on all sides of the hydrant, or to the undisturbed trench face, if less than 4 feet. Hydrants and connecting pipe shall have at least the same depth of cover as the distributing main. Hydrants shall be set upon a layer of stone or a slab of concrete not less than 4-inches thick and 15-inches square. The side of the hydrant opposite the pipe connection shall be firmly wedged against the vertical face of the trench with a concrete thrust block, as indicated on the drawings.

E. Broken stone shall be placed around the base of the hydrant at the location of the drain hole, and backfill around the hydrant shall be thoroughly compacted to the grade line in a satisfactory manner. Hydrants shall have the interiors cleaned of all foreign matter before installation, and shall be inspected in both the open and closed positions.

F. The body of the hydrant shall be of sufficient length to allow the hydrant to be set at the proper elevation, as shown on the drawings. Extensions shall be furnished and installed at the Contractor's expense, when required for greater depths.

F. Valve boxes shall be set plumb, flush with the ground or paved surface, and centered directly over the operating nut of the valves. Earth fill shall be carefully tamped around

the valve boxes to a distance of 4 feet on all sides of the boxes or to the undisturbed trench face, if less than 4 feet.

G. Valves shall be operational and accessible at all times during construction and warranty period. The Contractor shall verify proper operation of all valves in the presence of the Engineer and/or Owner following completion of the project and prior to the acceptance of Substantial Completion.

3.03 POLYETHYLENE ENCASEMENT:

A. The pipe, hydrants and valves to be encased shall be thoroughly cleaned of all soil and debris prior to installation of the polyethylene encasement. No soil or debris shall be allowed to enter the encasement during or after its installation.

B. Polyethylene encasement shall be installed using Method A as described in AWWA C105, with the encasement joints coincident with pipe joints. Adhesive tape shall be used to secure the encasement.

C. Minimum overlap of polyethylene encasement shall be 24-inches, 12-inches on each side of pipe joints.

D. If required, two layers of polyethylene encasement shall be installed. The first layer shall be completely installed on and secured to the length of pipe before the second layer is installed.

E. Tears, cuts and other damage shall be repaired with a piece of polyethylene covering secured with adhesive tape, when approved by the Engineer. Otherwise, the damaged length of polyethylene shall be replaced at the Contractor's expense.

F. Care shall be taken when backfilling to avoid damage to the polyethylene encasement.

END OF SECTION

O:\Quincy MA\FY 2016 Water Main Project\Design\Specifications\02514 Hydrants and Valves.docx

SECTION 02515

SERVICE CONNECTIONS (WATER SERVICES)

PART 1 - GENERAL

1.01 WORK INCLUDED:

This section covers the furnishing and installation of new water service connections and the repair, replacement, and/or transfer of existing water service connections as shown on the drawings, as specified herein, and as required by the Engineer.

1.02 RELATED WORK:

A. Section 02080, DUCTILE IRON PIPE AND FITTINGS

B. Section 02745, PAVING

C. Section 02775, SIDEWALK CONSTRUCTION AND REPLACEMENT

D. Section 02920, LOAMING AND SEEDING

1.03 REFERENCES:

A. The following standards form a part of this specification:

American Society for Testing and Materials (ASTM)

ASTM	B88	Seamless Copper Water Tube
ASTM	B584	Copper Alloy Sand Castings for General Applications
ASTM	D2737	Polyethylene (PE) Plastic Tubing

American Water Works Association (AWWA)

AWWA	C800	Water-Service Line Fittings
AWWA	C651	Disinfecting Water Mains
AWWA	C901	Polyethylene Pressure Pipe & Tubing, 1/2-inch through 3-inch for Water Service

Federal Specifications (FS)

FS	WW-T-799C	Tube, Copper, Seamless

1.04 SUBMITTALS: IN ACCORDANCE WITH REQUIREMENTS OF THE GENERAL SPECIFICATIONS, SUBMIT THE FOLLOWING:

Manufacturer's literature of the materials of this section for review.

PART 2 - PRODUCTS

2.01 SERVICE PIPING:

A. Piping for buried copper water services shall be continuous Type K annealed seamless copper water tubing conforming to ASTM B88 Standard Specification for Seamless Copper Water Tube or U.S. Federal Specification WW-T-799C for Tube, Copper, Seamless. Tubing shall be 1-inch diameter unless otherwise indicated.

B. Couplings, if required, for existing to new service pipe connections shall have compression connections on the inlet and compression connections on the outlet. Couplings shall be made of brass as specified in AWWA C800. All brass components that come into contact with potable water shall be made from either CDA/UNS Brass Alloys C89520 or C89833 and shall not contain more than twenty five hundredths of one percent (0.25% or less) total lead content by weight. The lead leach limit of the coupling shall be 5 parts per billion (ppb). Couplings shall be NSF/ANSI 61 Annex F and Annex G and NSF/ANSI 372 certified by an ANSI accredited organization and shall be stamped or embossed with a mark or name indicating that the product is manufactured from a low-lead alloy, as specified above.

2.02 CORPORATION STOPS:

A. Corporations stops shall be made of brass as specified in AWWA C800. All brass components that come into contact with potable water shall be made from either CDA/UNS Brass Alloys C89520 or C89833 and shall not contain more than twenty five hundredths of one percent (0.25% or less) total lead content by weight. The lead leach limit of the corporation stops shall be 5 ppb. Corporation stops shall be NSF/ANSI 61 Annex F and Annex G and NSF/ANSI 372 certified by an ANSI accredited organization and shall be stamped or embossed with a mark or name indicating that the product is manufactured from a low-lead alloy, as specified above.

B. The inlet shall have AWWA taper thread (CC) connections and the outlet shall have compression connections.

C. Service clamps shall be installed with all corporation stops 2-inches and larger in size and with all corporation stops installed in PVC pipe. Clamps shall be all bronze, ductile iron or stainless steel, double strap, AWWA taper thread (CC) with O-ring seal.

D. Corporation stops shall be by Ford Meter Box Co., Inc., Wabash, IN; Red Hed Manufacturing Co., Lincoln, RI; Mueller Co., Decatur, IL; or approved equal.

2.03 CURB STOPS:

A. Curb stops shall be of brass as specified in AWWA C800. All brass components that come into contact with potable water shall be made from either CDA/UNS Brass Alloys C89520 or C89833 and shall not contain more than twenty five hundredths of one percent (0.25% or less) total lead content by weight. The lead leach limit of the curb stops shall be 5 ppb. Curb stops shall be NSF/ANSI 61 Annex F and Annex G and NSF/ANSI 372 certified by an ANSI accredited organization and shall be stamped or embossed with a mark or name indicating that the product is manufactured from a low-lead alloy, as specified above.

B. Curb stops shall be ball style and the inlet and the outlet shall have compression connections.

C. Curb stops shall be Catalogue #B44-444-Q by Ford Meter Box Co., Inc., Wabash, IN; Mark II Oriseal Model #H-15219 (with drain) Mueller Co., Decatur, IL; Series 262 Cambridge Brass Inc., Cambridge, ON; A.Y. McDonald, Dubuque, IA; or approved equal.

2.04 CURB BOXES:

A. The cast iron box shall be the sliding Buffalo type with Arch pattern base. Minimum inside diameter of the upper section shall be 1-1/2-inch for 3/4-inch and 1-inch curb stops and 2-inch for 1-1/2-inch and 2-inch curb stops. Curb box lid shall have brass pentagonal nut.

PART 3 - EXECUTION

3.01 INSTALLATION:

A. Where new water mains are being installed and existing water services are to be transferred to the new main, the Contractor shall discontinue the existing water services by shutting down the corporation stop at the old water main, unless specifically otherwise required by the Engineer. The Contractor shall take special care to minimize the interruption of existing water service.

B. The Contractor shall tap a new corporation stop and install a new curb stop and box and new copper piping, between the corporation stop and curb stop, for all water services. No couplings or unions shall be installed between the new water main and the new curb stop.

C. Where the existing water service is of copper between the curb stop and the house meter, the Contractor shall connect the new service piping to the existing service piping, using an approved coupling a minimum of 12-inches from the new curb stop, on the building side of the stop.

D. Where the existing service is of lead, lead lined, galvanized steel, brass, cement lined, or iron, the service shall be replaced to the water meter in the house. The Contractor shall connect the new water service to the water meter as detailed in the contract drawings.

E. The City will forward the Right of Entry notifications to homeowners. The Contractor shall begin replacing the homeowner portion of the water service only when the city receives signed and returned Right of Entry notifications from homeowners.

F. The Contractor shall return all private property to pre-construction conditions once work on the property is complete.

G. Curb stops and boxes shall be set plumb, flush with the ground or paved surface, and centered with the box located directly over the stop. The box shall be set on a concrete block or flat stone. Earth fill shall be carefully tamped around the boxes to a distance of 4 feet on all sides of the box or to the undisturbed face of the trench, if less than 4 feet.

H. Curb stops shall be operational and accessible at all times during construction and warranty period. The Contractor shall verify the proper operation of all curb stops in the presence of the Engineer and/or Owner following completion of the project and prior to the acceptance of substantial completion.

I. All services shall be installed at 5 feet 0 inches of cover unless otherwise required by the Engineer.

J. Service connections shall be tested and disinfected in accordance with AWWA standards.

END OF SECTION

O:\Quincy MA\FY 2016 Water Main Project\Design\Specifications\02515 Service Connections (Water Services).docx

SECTION 02516

CONNECTIONS TO EXISTING WATER MAINS

PART 1 - GENERAL

1.01 WORK INCLUDED:

A. This section covers connections to existing water mains, complete.

B. The Contractor shall furnish all pipe, fittings, valves, tapping machines, if required, and appurtenances. The Contractor shall do all excavation and backfill as required.

1.02 RELATED WORK:

A. Section 02080, DUCTILE IRON PIPE AND FITTINGS.

B. Section 02511, TEMPORARY WATER SERVICE.

C. Section 02514, HYDRANTS AND VALVES.

D. Section 03302, FIELD CONCRETE.

PART 2 - PRODUCTS: NOT APPLICABLE

PART 3 - EXECUTION

3.01 CONTRACTOR OPERATIONS:

A. The Contractor shall make all connections to the existing mains as indicated on the drawings and as herein specified.

B. The Contractor shall develop a program for the construction and putting into service of the new work subject to the approval of the Engineer. All work involving cutting into and connecting to the existing work shall be planned so as to interfere with operation of the existing facilities for the shortest possible time and when the demands on the system best permit such interference even to the extent of working outside of normal working hours to meet these requirements.

C. The Contractor shall have all possible preparatory work done prior to making the connection and shall provide all labor, tools, material, and equipment required to do the work in one continuous operation.

D. The Contractor shall have no claim for additional compensation, by reason of delay or inconvenience, for adapting his operations to the needs of the Owner's water supply. No damages shall be claimed by the Contractor for delays in dewatering pipelines nor

shall any damages be claimed because of water leaking through closed valves after dewatering is completed.

E. Under no circumstances shall any customers be without water for a period of more than 4 hours without prior approval of the Owner. Should it appear that any customer will be without water for more than 4 hours, the Contractor shall install temporary water service as specified in Section 02511, TEMPORARY WATER SERVICE where required by the Engineer.

F. Existing pipeline that is not to be abandoned but is damaged by the Contractor during the work shall be replaced by him at his own expense in a manner approved by the Engineer.

3.02 TAPPING CONNECTION TO EXISTING MAINS:

A. Tapping connections to the existing mains, where indicated on the drawings, shall be made with service pressure in the main, using tapping sleeves and valves and a suitable tapping machine.

B. Other connections to existing mains shall be made with the main out of service, unless otherwise required by the Engineer. Such connections will not require tapping sleeves and valves but connections as indicated on the drawings.

END OF SECTION

O:\Quincy MA\FY 2016 Water Main Project\Design\Specifications\02516 Connections to Existing Water Mains.docx

SECTION 02534

RECONSTRUCTION OF EXISTING SEWERS AND DRAINS

PART 1 - GENERAL

1.01 WORK INCLUDED:

This Section covers work required to reconstruct affected piping where proposed water mains cross existing street sewers, house sewer connections (referred to as sewers) and drains.

PART 2 - PRODUCTS

2.01 REPLACEMENT PIPE FOR SEWERS AND DRAINS:

A. The Contractor shall furnish all pipe, couplings, jointing materials, labor, tools and equipment necessary to reconstruct the sections of existing sewers or drains removed.

B. The size of replacement pipe shall closely approximate the size of existing section to be replaced, allowing a watertight joint to be made while maintaining the existing invert and slope.

PART 3 - EXECUTION

3.01 INSTALLATION:

A. Unless field conditions or the plans require otherwise, water mains shall pass over sewers and drains, except where, in the opinion of the Engineer, suitable cover and insulation cannot be provided. In such cases water mains shall pass under sewers and drains.

B. The vertical clear distance between water mains and sewers or drains will be no less than l8-inches, unless otherwise approved by the Engineer, or specifically indicated on the drawings. In locations where water mains shall pass over or under existing sewers or drains, the Contractor shall plan the laying of the mains such that the joints of a section of water main at least 18 feet long are equally distant from the sewer or drain.

C. Where proposed water mains pass under existing vitrified clay sewers, and damage to the sewer line cannot be prevented, and if approved by the Engineer, the sewer line shall be reconstructed using a minimum 9-foot section of ductile iron pipe or PVC sewer pipe. The pipe shall be installed such that joints of the reconstructed sewer are at a minimum distance of 4.5 feet on either side of the proposed water main

D. Drains which are shown on the plans or located in the field and are damaged by the Contractor shall be replaced with identical materials at the Contractor's expense unless the Engineer agrees in writing that the Contractor was not at fault.

E. Joints between existing pipe and replacement pipe shall be made with suitable watertight, eccentric sleeves or couplings to maintain similar pipe invert elevation.

F. Joints shall not be backfilled until approved for watertightness by the Engineer.

G. Watertightness shall be determined by allowing water to flow through the repaired pipeline (street sewers, drains and house connections). If there is any visual leakage under these conditions, the pipe will not be accepted as watertight and shall be repaired at the Contractor's expense.

3.02 EXISTING SEWERS:

The composition, diameter, flow direction, approximate locations and depths to inverts of street sewers are indicated on the drawings, if known.

3.03 EXISTING DRAINS:

A. Existing drains are assumed to be of reinforced concrete pipe, unless otherwise noted on the drawings.

B. The diameter, flow direction and approximate locations and depths to inverts of drains are indicated on the drawings, if known.

3.04 DIVERSION OF SEWAGE FLOWS:

A. During construction of the water mains under existing street sewers and replacement of required sections of street sewers, sewage flows shall be diverted away from said street sewer. This may be accomplished by plugging both ends of the street sewer at the nearest manhole and pumping the sewage from the upstream manhole to the next downstream manhole.

B. The Contractor shall furnish all labor, materials, tools and equipment necessary to divert sewage flows from such street sewers.

C. During construction of water mains under house sewer connections, and replacement of required section of house sewer connections, no sewage flow shall be allowed in the house sewer connections.

END OF SECTION

SECTION 02745

PAVING

PART 1 - GENERAL

1.01 WORK INCLUDED:

The Contractor shall furnish all labor, materials and equipment and shall replace the pavements as indicated on the drawings and as herein specified.

1.02 RELATED WORK:

A. Section 00890, PERMITS

B. Section 01562, DUST CONTROL

C. Section 02300, EARTHWORK

D. Section 02631, PRECAST MANHOLES AND CATCH BASINS

1.03 SYSTEM DESCRIPTION:

A. GENERAL

The types of pavement systems to be utilized on this project are as follows:

TYPE 1. TEMPORARY TRENCH PAVEMENT
TYPE 2. PERMANENT TRENCH PAVEMENT W/ 12” CUTBACKS

PAVEMENT SCHEDULE

ELM AVENUE – TYPES 1 AND 2
MAIN STREET – TYPES 1 AND 2
SEA STREET – TYPES 1 AND 2
WINTHROP PARK – TYPES 1 AND 2
WINTHROP STREET – TYPES 1 AND 2

B. TYPE 1. TEMPORARY TRENCH PAVEMENT

Areas shall be paved with temporary trench pavement a minimum of one time per week or as required by the Engineer. No water main trenches shall remain unpaved over the weekend. No more the 300 feet of trench shall be exposed without temporary pavement. Temporary trench pavement shall include a gravel sub-base, binder course pavement, and have thicknesses as shown on the contract drawings. All trench edges shall be saw cut prior to placement of pavement. Contractor shall be responsible for maintaining and repairing temporary trench pavement during construction and until the permanent trench pavement is installed, as per these specifications.

C. TYPE 2. PERMANENT TRENCH PAVEMENT W/ 12-INCH CUTBACKS

Areas shall be paved with permanent trench pavement only after temporary pavement is maintained a minimum of 90 days or as required by the Engineer. Permanent trench pavement shall be installed only after temporary trench pavement has been removed. Permanent trench pavement shall consist of a gravel subbase, binder course pavement, top course pavement, have 12-inch cutbacks, and have thicknesses as shown on the contract drawings. Permanent trench pavement shall be installed flush with the existing pavement and shall be installed only with the approval of the Engineer.

D. PAVEMENT MARKINGS

Existing pavement markings within the limits of paving shall be replaced with new pavement markings after the permanent pavement replacement is completed to reflect the original pavement markings as shown on construction plans, or as approved by the Engineer.

1.04 REFERENCES:

The following standards form a part of these specifications and indicate the minimum standards required:

American Society for Testing and Materials (ASTM)

ASTM D1557	Test for Moisture-Density Relations of Soils and Soil-Aggregate Mixtures Using 10 Pound Rammer and 18-Inch Drop

Massachusetts Department of Transportation (MassDOT)
Standard Specifications for Highways and Bridges

MassDOT 403	Reclaimed Base Course
MassDOT 405	Gravel Base Course
MassDOT 420	Hot Mix Asphalt Base Course
MassDOT 460	Hot Mix Asphalt Pavement
MassDOT 476	Cement Concrete Pavement
MassDOT 860	Reflectorized Pavement Markings

Federal Specifications

SS-S-1401	Sealants, Joint, Non-Jet-Fuel-Resistant, Hot Applied, for Portland Cement and Asphalt Concrete Pavement

AASHTO Standard Specifications for Materials and Methods of Sampling and Testing

1.05 SUBMITTALS: IN ACCORDANCE WITH REQUIREMENTS OF GENERAL SPECIFICATIONS, SUBMIT THE FOLLOWING:

Six sets of complete job mix formula shall be submitted to the Engineer at least two weeks before any of the work of this section is to begin.

PART 2 - PRODUCTS

2.01 GRAVEL SUBBASE:

A. Gravel subbase shall consist of inert material that is hard durable stone and coarse sand, free from loam and clay, surface coatings and deleterious materials.

B. Gradation requirements for gravel subbase shall be as specified in Section 02300, EARTHWORK for Gravel Borrow.

2.02 RECLAIMED SUBBASE:

A. Reclaimed subbase shall consist of crushed asphalt pavement, crushed cement concrete, and gravel borrow (as specified in paragraph 2.02) uniformly pre-mixed.

B. Reclaimed subbase mixtures shall be within the composition limits in accordance with MassDOT M1.11.0, with constituents that conform to Table A, below.

C. The approved source of reclaimed pavement borrow material shall be processed by mechanical means. The equipment for producing crushed material shall be of adequate size and with sufficient adjustments to produce the desired materials. The processed material shall be stockpiled in such a manner as to minimize segregation of particle sizes. All reclaimed pavement borrow material shall come from approved stockpiles.

2.03 HOT MIX ASPHALT PAVEMENT:

A. Pavements shall consist of hot mix asphalt.

B. Pavement mixtures shall be within the composition limits of base courses, binder courses, top courses and surface treatment, in accordance with MassDOT M3.11.03, with constituents that conform to Table A, below.

TABLE A

PERCENT BY MASS PASSING SIEVE DESIGNATION

Standard Sieves (in.)	Reclaimed Subbase	Base Course	Binder Course	Top Course	Mod. Top Course	Surface Treat.
3 in	100					
2 in		100				
1-1/2 in	70-100					
1 in		57-87	100		100	
¾ in	50-85		80-100		95-100	
5/8 in				100		
½ in		40-65	55-75	95-100	79-100	
3/8 in				80-100	68-88	100
No.4	30-60	20-45	28-50	50-76	48-68	80-100
No.8		15-33	20-38	37-49	33-46	64-85
No.16				26-40	20-40	46-68
No.30		8-17	8-22	17-29	14-30	26-50
No.50	8-24	4-12	5-15	10-21	9-21	13-31
No.100				5-16	6-16	7-17
No.200	0-10	0-4	0-5	2-7	2-6	3-8
Binder		4-5	4.5-5.5	5.6-7.0	5.1-6	7-8

Percentages shown for aggregate sizes are stated as proportional percentages of total aggregate for the mix.

Unless authorized by the Engineer, no Job-Mix Formula will be approved which specifies:

More than 45% passing No. 8 for Top and Dense Binder Courses
More than 38% passing No. 8 for Modified Top Course
More than 55% passing No. 8 for Dense Mix
Less than 4% passing No. 200 for Top Course.
Less than 6% bitumen for Top Course.

C. The joint sealant shall be a hot poured rubberized emulsified asphalt sealant meeting the requirements of FS SS-S-1401.

D. The tack coat shall be an asphalt emulsion, RS-1 if required, conforming to MassDOT Section M3.03.0.

2.05 PAVEMENT MARKINGS:

A. Pavement markings shall conform to the requirements of MassDOT 860.

B. The mixture of the marking material shall be within the composition limits for reflectorized pavement markings as described in the MassDOT Specifications as follows:

1. Thermoplastic reflectorized pavement markings - M7.01.03/04.

B. Application of the glass beads to be used as reflector material on the striping shall conform to Sections 860.62 and M7.03.07 of the MassDOT Specifications.

PART 3 - EXECUTION

3.01 GENERAL:

Paving courses required for the project shall be as shown on the drawings and as specified herein. Pavement thicknesses specified are measured in compacted inches. If a pavement course thickness exceeds 2-1/2 compacted inches, the course shall be installed in multiple lifts with each lift not exceeding 2-1/2 compacted inches in thickness.

3.02 GRAVEL SUBBASE:

A. The gravel subbase to be placed under pavement shall consist of 12-inches of gravel evenly spread and thoroughly compacted.

A. The gravel shall be spread in layers not more than 4-inches thick, compacted measure. All layers shall be compacted to not less than 95 percent of the maximum dry density of the material as determined by ASTM D1557 Method C at optimum moisture content.

3.04 RECLAIMED SUBBASE:

A. The reclaimed borrow material to be placed under the pavement shall consist of 12-inches of reclaimed borrow material evenly spread and thoroughly compacted.

B. The reclaimed borrow material shall be spread and compacted in layers not exceeding 4-inches thick, compacted measure, except the last layer of reclaimed pavement borrow material shall be 2-inches thick, compacted measure. All layers shall be compacted to not less than 95 percent of the maximum dry density of the material as determined by ASTM D1557 Method C at optimum moisture content.

3.05 TEMPORARY BITUMINOUS PAVEMENT:

A. Where specified and required by the Engineer and after placement of the gravel subbase, the Contractor shall place temporary bituminous pavement above the trench, between the edges of the existing pavement. It shall consist of hot mix asphalt, 2-inches thick, in accordance with MassDOT 460.

B. The temporary pavement shall be repaired as necessary to maintain the surface of the pavement until replaced by permanent pavement. When so required by the Engineer, the Contractor shall remove the temporary pavement and install or regrade the subbase for installation of permanent pavement.

3.06 PERMANENT BITUMINOUS PAVEMENT:

A. The bituminous paving mixture, equipment, methods of mixing and placing, and the precautions to be observed as to weather, condition of base, etc., shall be in accordance with MassDOT 460.

B. BASE COURSE AND BINDER COURSE PAVEMENT:

1. Immediately prior to installing the base and/or binder course, the trimmed edges shall be made stable and unyielding, free of loose or broken pieces and all edges shall be thoroughly broomed clean. Contact surfaces of trench sides, curbings, manholes, catch basins, or other appurtenant structures in the pavement shall be painted thoroughly with a uniform coating of asphalt emulsion (tack coat), just before any mixture is placed against them.

2. The binder course shall be repaired as necessary to maintain the surface of the pavement until placement of the permanent overlay. If required, the Contractor shall place a leveling course before placing the permanent overlay.

C. TOP COURSE OR SURFACE TREATMENT PAVEMENT (PERMANENT OVERLAY):

1. Top course or surface treatment shall be placed over the trench or full width as shown on the drawings or as specified.

2. Prior to placement of the top course or surface treatment, the entire surface over which the top course or surface treatment is to be placed shall be broom cleaned and tack coated.

3. Top course or surface treatment pavement placed over trenches may be feathered to meet existing paved surfaces, if approved by the Engineer.

4. Prior to placing full width top course or surface treatment pavements, keyways shall be cut in all intersecting streets.

3.07 PAVEMENT PLACEMENT:

A. Unless otherwise permitted by the Engineer for particular conditions, only machine methods of placing the pavement shall be used. The equipment for spreading and finishing shall be mechanical, self-powered pavers, capable of spreading and finishing the mixture true to line, grade, width and crown. The mixtures shall be placed and

compacted only at such times as to permit proper inspection and checking by the Engineer.

B. After the paving mixtures have been properly spread, initial and intermediate compaction shall be obtained by the use of steel wheel rollers having a weight of not less than 240 pounds per inch width of tread.

C. Final rolling of the top course or surface treatment pavement shall be performed by a steel wheel roller weighing not less than 285 pounds per inch width of tread at a mix temperature and time sufficient to allow for final smoothing of the surface and thorough compaction.

D. Immediately after placement of top course or surface treatment pavement, all joints between the existing and new top course or surface treatment pavements shall be sealed with hot poured rubberized asphalt joint sealant.

E. Where there is no backing for the edges of the curb-to-curb pavement, the Contractor shall provide a gravel transition. The gravel transition shall be installed immediately after the pavement is placed, shall be feathered and extend a minimum of 18-inches, and shall be compacted using the same equipment as for pavement compaction. The gravel shall be uniformly graded material with a maximum size of 3/8- to ½-inch.

F. When required by the Engineer, the Contractor shall furnish and install additional paving to provide satisfactory transition for driveways and walkways impacted by a new curb-to-curb pavement installation. The transition installation will be considered incidental to the curb-to-curb pavement installation.

3.08 ADDITIONAL PAVING:

A. If the Engineer determines that the existing bituminous concrete pavement on local streets is thicker than the permanent pavement specified herein, the Contractor may be required to install hot mix asphalt to obtain the depth of the existing pavement.

B. If for the installation of full width paving, the Engineer determines that the existing road surface requires additional leveling pavement, then the Contractor shall install additional hot mix asphalt to bring the section to proper line and cross section. Additional paving required to restore the proper line and cross section of binder course installed by the Contractor which has become rough and uneven shall be furnished and installed at the expense of the Contractor.

3.09 RAISING AND ADJUSTING CASTINGS:

A. In areas of permanent top course paving, existing municipally-owned catch basin and manhole castings and valve boxes shall be raised to the proper grade where required by the Engineer.

B. Castings owned by private utilities shall be raised by their own forces. The Contractor shall be responsible for coordinating this work.

C. The method of adjusting these castings shall be as follows: Cut around catch basin or manhole castings a minimum of 8-inches from casting. Excavate and if required rebuild up to 12-inches of masonry below the bottom of the casting. Backfill with suitable material and compact to bottom of casting. Place high, early strength cement or bituminous concrete collar, as required, to approximately 1½-inches below the raised casting grade.

D. In some areas, raising of castings may not be required. Where required by the Engineer, castings not to be raised shall have at least 12-inches of bituminous concrete pavement chipped and removed around the casting. New bituminous concrete pavement shall be placed and compacted around such castings to approximately 1-1/2-inches below the top of the casting. The overlay course shall then be sloped down to the level of the casting.

E. The method of raising valve boxes shall be as follows: Cut around valve box a minimum of 8-inches from valve box. Excavate as required and raise the valve box. Pour high early strength cement or bituminous concrete collar, as required, to approximately 1-1/2-inches below the top of the valve box.

E. Castings which need to be raised or adjusted to complete permanent curb to curb paving shall be done immediately prior to paving.

3.10 PAVEMENT MARKINGS:

A. The Contractor shall replace all pavement markings removed or covered-over in carrying out the work, and as required by the Engineer, no sooner than 48 hours after completion of permanent pavement. The markings shall be 4-inches wide, white or yellow, single or double lines as required.

B. When required by the Engineer, the Contractor shall provide temporary markings at no additional cost to the Owner.

3.11 PAVEMENT REPAIR:

A. If required in the contract or if permanent pavement becomes rough or uneven, permanent pavement patches and trenches shall be repaired and brought to grade utilizing "infrared" paving methods following completion of the construction.

B. The Contractor performing the work shall use care to avoid overheating the pavement being repaired.

C. Pavement repair shall extend a minimum of 6-inches beyond all edges of the pavement patch to assure adequate bonding at the pavement joints.

END OF SECTION

SECTION 02771

CURBING

PART 1 - GENERAL

1.01 WORK INCLUDED:

A. This section covers furnishing and installation of granite curb, bituminous concrete curb and precast parking curb, where required, as shown on the Drawings and herein specified.

B. This section also covers replacement of curbing removed during construction. The material of all replacement curbing shall be the same as the existing curbing material.

1.02 RELATED WORK:

A. Required earthwork is specified under Section 02300 EARTHWORK.

B. Section 02745, PAVING.

C. Section 02775, SIDEWALK CONSTRUCTION AND REPLACEMENT

1.03 REFERENCES:

The following standards form a part of these specifications, as referenced:

Massachusetts Department of Transportation (MassDOT) Standard Specifications for Highways and Bridges

1.04 SUBMITTALS: IN ACCORDANCE WITH REQUIREMENTS OF GENERAL SPECIFICATIONS, SUBMIT THE FOLLOWING:

Six sets of shop drawings, showing dimensions of typical curb sections, shall be submitted to the Engineer for review.

PART 2 - PRODUCTS

2.01 GRANITE CURBING:

A. Granite curbing shall be Type VAI conforming to Subsection M9.04.1 of the latest edition of the MassDOT Standard Specifications for Highways and Bridges.

B. Special shapes and corners shall be supplied as required.

2.02 GRANITE EDGING:

A. Granite edging shall be Type SB conforming to Subsection M9.04.2 of the latest edition of the MassDOT Standard Specifications for Highways and Bridges.

B. Special shapes and corners shall be supplied as required.

2.03 HOT MIX ASPHALT CURB

Curb shall conform to Subsection M3.12.0 of the latest edition of the MassDOT Standard Specifications for Highways and Bridges.

2.04 PRECAST CONCRETE CURB:

A. Precast concrete curb shall be formed with concrete rated at 3500 psi at 28 days.

B. The manufacturer shall maintain at the manufacturing site a record of material used and their sources, and a copy of concrete mix designs.

C. Precast concrete curb shall be the Standard Precast Bumper Curb as manufactured by Durastone Co., Lincoln, RI, or approved equal.

PART 3 - EXECUTION

3.01 GRANITE CURBING:

A. Removal and resetting and/or removal and replacing of granite curbing shall be in accordance with Section 580 of the latest edition of the MassDOT Standard Specifications for Highways and Bridges. The curbing shall have a 7-inch reveal unless otherwise required by the Engineer.

B. Except as modified herein or on the drawings, installation of curbing shall conform to Section 500 of the MassDOT Standard Specifications for Highways and Bridges.

C. Excavation shall be made to the bottom of the 6-inch gravel base below the curbing, the trench being sufficiently wide to permit thorough tamping. The base shall be compacted to a firm, even surface and shall be approved by the Engineer.

D. The curbing shall be set on edge and settled into place with a heavy wooden hand-rammer, to the line and grade required, straight and true for the full depth. The joints of the stone curbing shall be pointed with mortar for the full depth of the curbing. At approximately 50-foot intervals, a 1/2-inch joint shall not be filled with mortar but left free for expansion. The ends of the stone curbing at driveways and intersections shall be cut at a bevel or rounded as required by the Engineer.

E. The trench for the stone curbing shall be backfilled with approved material; the first layer to be 4-inches in depth, thoroughly rammed; the other layers to be more than 6-inches in depth and thoroughly rammed until the trench is filled.

F. Where indicated on the plans, or as required, drainage openings shall be made through the curbing at the elevations and of the size required.

3.02 GRANITE EDGING:

A. Except as modified herein and on the drawings, installation of granite edging shall conform to Section 500 of MassDOT Standard Specifications for Highways and Bridges.

B. The cement concrete base shall be placed on a well-tamped sub-base acceptable to the Engineer, and shall be constructed of 3000 psi concrete, minimum, as shown on the drawings.

C. The edging shall be set to the proper lines and grades on the concrete base and on a well-tamped sloping gravel surface.

3.03 BITUMINOUS CONCRETE CURB:

A. Replacement of bituminous concrete curbs shall be in accordance with Section 500 of the latest edition of the MassDOT Standard Specification for Highways and Bridges and all amendments thereto. The curbing shall have a 6-inch reveal unless otherwise required by the Engineer.

B. Unless modified herein, installation shall conform to Section 501.64 of the MassDOT Standard Specifications for Highways and Bridges.

C. When indicated on the plans, or as directed, drainage openings shall be made through the curb at the elevations and of the size required.

3.04 PRECAST CONCRETE CURBING:

A. Precast concrete curbing shall be furnished and installed as indicated on the drawings.

B. Any units, which are cracked, chipped, spalled, or otherwise damaged, shall be removed and replaced with units meeting the specified requirements.

END OF SECTION

O:\Quincy MA\FY 2016 Water Main Project\Design\Specifications\02771 Curbing.docx

SECTION 02775

SIDEWALK CONSTRUCTION AND REPLACEMENT

PART 1 - GENERAL

1.01 WORK INCLUDED:

The Contractor shall furnish all labor, materials, equipment and incidentals required to restore sidewalks and/or construct new or replacement bituminous or cement concrete sidewalks where required or where existing sidewalks are disturbed by the Contractor, as shown on the drawings and described herein. The material of all new or replacement sidewalk shall be the same as the existing surrounding sidewalk material. The Contractor shall also furnish all materials and install wheelchair ramps where shown on the drawings or as required by the Engineer.

1.02 RELATED WORK:

A. Section 02300, EARTHWORK

B. Section 02745, PAVING

C. Section 02771, CURBING

1.03 REFERENCES

The following standards form a part of these specifications, as referenced:

Massachusetts Department of Transportation (MassDOT)
Standard Specifications for Highways and Bridges

1.04 SUBMITTALS

A. The Contractor shall submit six (6) sets of shop drawings and/or materials specifications for each component of the work to be performed under this section of the Specifications.

1.05 SYSTEM DESCRIPTION:

A. GRAVEL SIDEWALKS:

Gravel sidewalks shall be restored to a condition at least equal to that existing immediately before the work was started.

B. BITUMINOUS AND CEMENT CONCRETE SIDEWALKS, WHEELCHAIR RAMPS, AND DRIVEWAY BIBS:

1. Except as otherwise indicated, bituminous and cement concrete sidewalks, wheelchair ramps, and driveway bibs shall be constructed in accordance with the requirements of Section 701, Sidewalks, Wheelchair Ramps and Driveways, of the latest edition of the MassDOT Standard Specifications for Highways and Bridges, MassDOT Construction Standard Details (March 2012), ADA/AAB Standards, and all amendments thereto.

2. Wheel chair ramps shall be installed in new sidewalks at intersections in accordance with 521 CMR. When curbs or sidewalks are constructed or reconstructed on one side of the street, curb cuts shall also be installed on the opposite sides of the street, where there is a pedestrian path of travel. Curb cuts shall be located within the crosswalk and/or the pedestrian path of travel.

C. Water boxes, manhole frames, and all other castings shall be carefully set to the proposed finished grade.

D. Sidewalks shall not be less than 48 inches in width, excluding curbing. An unobstructed path of travel shall be provided which is at least 36 inches clear, excluding curbing.

PART 2 - PRODUCTS

2.01 HOT MIX ASPHALT SIDEWALKS :

A. Sidewalks shall consist of hot mix asphalt.

B. Hot mix asphalt shall conform to the requirements of MassDOT M3.11, Table A, Dense Mix.

2.02 CEMENT CONCRETE SIDEWALKS, WHEELCHAIR RAMPS, AND DRIVEWAY BIBS:

A. Cement concrete sidewalks shall be constructed with air entrained Cement Concrete with a minimum compressive strength of 4000 psi at 28 days.

B. Cement concrete shall conform to the requirements of MassDOT M4.02.

PART 3 - EXECUTION:

3.01 HOT MIX ASPHALT SIDEWALKS:

A. The subgrade for the sidewalks shall be shaped parallel to the proposed surface of the sidewalks and shall be thoroughly rolled and tamped. All depressions occurring shall be filled with suitable material and again rolled or tamped until the surface is smooth and hard in order for a gravel foundation to be placed upon it.

B. The hot mix asphalt sidewalk shall be a minimum of 2½ compacted inches thick, laid in two equal courses. The sidewalk pitch shall be 3/16-inch per foot of width or shall match the existing sidewalk.

3.02. CEMENT CONCRETE SIDEWALKS AND WHEELCHAIR RAMPS:

A. Concrete for sidewalks and wheelchair ramps shall be a minimum of 4-inches thick. At driveways, the sidewalks shall be 6-inches thick.

B. The subgrade for the walk or driveway shall be shaped to a true surface conforming to the proposed slope of the walk, thoroughly rolled at optimum moisture content and tamped with a power roller weighing not less than one ton and not more than 5 tons. All depressions occurring shall be filled with suitable material and again rolled or tamped until the surface is smooth and hard.

C. After the subgrade has been prepared as hereinbefore specified, a subbase of gravel borrow at optimum moisture content shall be placed, thoroughly rolled by a power roller, and tamped. The gravel borrow shall be a minimum of 8-inches in thickness.

D. The forms for sidewalks shall be smooth, free from warp, strong enough to resist springing out of shape, and deep enough to conform to the thickness of the proposed walk. All mortar or dirt shall be completely removed from forms that have been previously used. The forms shall be well staked, thoroughly braced, and set to the established lines with their upper edge conforming to the grade of the finished walk. The finished walk shall have sufficient pitch from the outside to the edge of the walk to provide for surface drainage. This pitch shall be ¼-inch per foot unless otherwise required by the Engineer. Before the concrete is placed, the subbase for sidewalks shall be thoroughly dampened until it is moist throughout but without puddles of water.

E. Concrete shall be conveyed from the place of mixing to the place of deposit in such a manner that no mortar will be lost, and the composition of the mix shall be uniform, showing neither excess nor lack of mortar in any one place. The consistency shall be such that water will float to the surface under heavy tamping. The concrete shall be placed as close to its final position as practicable and thoroughly consolidated, with precautions taken not to overwork it while it is still plastic. The concrete shall be thoroughly spaded along the forms or screeds to eliminate voids and honeycombs at the edges. Retempering of concrete will not be permitted.

F. Concrete shall be placed in alternate slabs not exceeding 30 feet in length. Slabs shall be separated by transverse preformed expansion joint filler ½-inch thick. The surface of all concrete sidewalks shall be uniformly scored into block units of not more than 40 square feet. The depth of the scoring shall be at least one quarter of the thickness of the sidewalk.

G. When concrete sidewalks are constructed adjacent to curbing, building foundations, retaining walls, light pole bases or fixed structures, ½-inch thick premolded joint filler shall be used between the newly constructed sidewalk and the structure.

H. Finishing of the concrete surface shall be done by experienced and competent cement finishers as soon as is practicable. Finishing shall be delayed until all bled water and water sheen has left the surface and the concrete has begun to stiffen. The concrete surface shall be finished as directed with a steel trowel or wood float to give a smooth, uniform and attractive surface finish and uniformly scored into block units or areas of not more than 36 square feet. Following this, the Contractor shall draw a nylon push broom lightly over the surface to produce a non-slip surface. Application of neat cement to the surface to hasten hardening is prohibited.

I. The Contractor shall protect the newly placed concrete surface against vandalism and marking or defacing and must stand ready to replace any blocks which, in the opinion of the Engineer, are excessively marked or defaced, at no additional cost to the Owner. When completed the walks shall be kept moist and protected from traffic and weather for at least 3 days.

J. Adequate protection shall be provided where temperatures of 40ºF or lower occur during placing of concrete and during the early curing period. The minimum temperature of fresh concrete after placing and for the first 3 days shall be maintained above 55ºF. In addition to the above requirements, an additional 3 days of protection from freezing shall be maintained.

END OF SECTION

O:\Quincy MA\FY 2016 Water Main Project\Design\Specifications\02775 Sidewalk Construction and Replacement.docx

SECTION 02920

LOAMING AND SEEDING

PART 1 - GENERAL

1.01 WORK INCLUDED:

This section covers all labor, materials, and equipment necessary to do all loaming, seeding and related work as indicated on the drawings and as herein specified. All lawns disturbed by the Contractor's operations shall be repaired as herein specified.

1.02 RELATED WORK:

A. Section 02300, EARTHWORK

1.03 QUALITY ASSURANCE:

A. For a particular source of loam, the Engineer may require the Contractor to send approximately 10 pounds of loam to an approved testing laboratory and have the following tests conducted:

1. Organic concentration
2. pH
3. Nitrogen concentration
4. Phosphorous concentration
5. Potash concentration

B. These tests shall be at the Contractor's expense. Test results, with soil conditioning and fertilizing recommendations, shall be forwarded to the Engineer.

1.04 SUBMITTALS: IN ACCORDANCE WITH REQUIREMENTS OF GENERAL SPECIFICATIONS, SUBMIT THE FOLLOWING:

A. Six sets of information detailing the seed mixes, fertilizers, mulch material, slope protection material (if required) and origin of loam shall be submitted to the Engineer for review.

B. Three sets of test results shall be submitted to the Engineer for review.

PART 2 - PRODUCTS

2.01 MATERIALS:

A. LOAM:

1. Loam shall be a natural, fertile, friable soil, typical of productive soils in the vicinity, obtained from naturally well-drained areas, neither excessively acid nor alkaline, and containing no substances harmful to grass growth. Loam shall not be delivered to the site in frozen or muddy condition and shall be reasonably free of stumps, roots, heavy or stiff clay, stones larger than 1-inch in diameter, lumps, coarse sand, noxious weeds, sticks, brush or other litter.

2. The loam shall contain not less than 4 percent nor more than 20 percent organic matter as determined by the loss of weight by ignition of oven-dried samples. Test samples shall be oven-dried to a constant weight at a temperature of 230 degrees F.

B. LIME:

Lime shall be standard commercial ground limestone containing at least 50 percent total oxides (calcium oxide and magnesium oxide), and 50 percent of the material must pass through a No. 100 mesh sieve with 98 percent passing a No. 2 mesh sieve.

C. FERTILIZER:

Fertilizer shall be commercial fertilizer, 10-10-10 fertilizer mixture containing at least 40 percent of organic nitrogen. It shall be delivered to the site in the original sealed containers, each showing the manufacturer's guaranteed analysis. Fertilizer shall be stored so that when used it will be dry and free flowing. No fertilizer shall be used which has not been marketed in accordance with State and Federal Laws, relating to fertilizers.

D. MULCH:

1. Materials to be used in mulching shall conform to the following requirements:

2. Straw Mulch - Straw Mulch shall consist of stalks or stems of grain after threshing.

3. Wood Fibre Mulch - Wood Fibre Mulch shall consist of wood fibre produced from clean, whole uncooked wood, formed into resilient bundles having a high degree of internal friction and shall be dry when delivered to the project.

E. SEED:

1. Seed shall be of an approved mixture, the previous year's crop, clean, high in germinating value, a perennial variety, and low in weed seed. Seed shall be obtained from a reliable seed company and shall be accompanied by certificates relative to mixture purity and germinating value.

2. Grass seed for lawn areas shall conform to the following requirements:

	Proportion by Weight	Germination Purity	Purity Minimum
Chewing's Fescue	30%	70%	97%
Kentucky 31 Fescue	30%	90%	98%
Kentucky Blue Grass	20%	80%	85%
Domestic Rye Grass	20%	90%	98%

Grass seed for cross-country areas, slopes and other areas not normally mowed shall conform to the following requirements:

	Proportion by Weight	Germination Minimum	Purity Minimum
Creeping Red Fescue	50%	85%	95%
Kentucky 31	30%	85%	95%
Domestic Rye	10%	90%	98%
Red Top	5%	85%	92%
Ladino Clover	5%	85%	96%

PART 3 - EXECUTION

3.01 SURFACE PREPARATION:

A. After approval of rough grading, loam shall be placed on areas affected by the Contractor's operations. Loam shall be at least 6-inches compacted thickness.

B. Lime shall be applied to bring the pH to 6.5 or, without a soil test, at the rate of 2-3 tons of lime per acre.

C. Fertilizer shall be applied according to the soil test, or without a soil test, at the rate of 1000 pounds per acre.

D. Loam shall be worked a minimum of 3-inches deep, thoroughly incorporating the lime and fertilizer into the soil. The loam shall then be raked until the surface is finely pulverized and smooth and compacted with rollers, weighing not over 100 pounds per linear foot of tread, to an even surface conforming to the prescribed lines and grades. Minimum depth shall be 6-inches after completion.

3.02 SEEDING:

A. Seeding shall be done when weather conditions are approved as suitable, in the periods between April l and May 30 or August l5 to October l, unless otherwise approved.

B. If there is a delay in seeding, during which weeds grow or soil is washed out, the Contractor shall remove the weeds or replace the soil before sowing the seed, without

additional compensation. Immediately before seeding is begun, the soil shall be lightly raked.

C. Seed shall be sown at the approved rate, on a calm day by machine.

D. One half the seed shall be sown in one direction and the other half at right angles. Seed shall be raked lightly into the soil to a depth of l/4-inch and rolled with a roller weighing not more than l00 pounds per linear foot of tread.

E. The surface shall be kept moist by a fine spray until the grass shows uniform germination over the entire area. Wherever poor germination occurs in areas larger than 3 sq. ft., the Contractor shall reseed, roll, and water as necessary to obtain proper germination.

F. The Contractor shall water, weed, cut and otherwise maintain and protect seeded areas as necessary to produce a dense, healthy growth of perennial lawn grass.

G. If there is insufficient time in the planting season to complete the fertilizing and seeding, permanent seeding may be left until the following planting season, at the option of the Contractor or as required by the Engineer. In that event, a temporary cover crop shall be sown. This cover crop shall be cut and watered as necessary until the beginning of the following planting season, at which time it shall be plowed or harrowed into the soil, the area shall be fertilized and the permanent seed crop shall be sown as specified.

3.03 PLACING MULCH:

A. Straw Mulch shall be loosely spread to a uniform depth over all areas designated on the plans, at the rate of 4-1/2 tons per acre, or as otherwise required.

B. Straw Mulch may be applied by mechanical apparatus, if in the judgment of the Engineer the apparatus spreads the mulch uniformly and forms a suitable mat to control slope erosion. The apparatus shall be capable of spreading at least 80 percent of the hay or straw in lengths of 6-inches or more, otherwise it shall be spread by hand without additional compensation.

C. Wood Fibre Mulch shall be uniformly spread over certain selected seeded areas at the minimum rate of 1,400 pounds per acre unless otherwise required. It shall be placed by spraying from an approved spraying machine having pressure sufficient to cover the entire area in one operation.

3.04 SEEDING AND MULCHING BY SPRAY MACHINE:

A. The application of lime, fertilizer, grass seed and mulch may be accomplished in one operation by the use of an approved spraying machine. The materials shall be mixed with water in the machine and kept in an agitated state in order that the materials may be uniformly suspended in the water. The spraying equipment shall be so designed that

when the solution is sprayed over an area, the resulting deposits of lime, fertilizer, grass seed and mulch shall be equal to the specified quantities.

B. A certified statement shall be furnished, prior to start of work, to the Engineer by the Contractor as to the number of pounds of limestone, fertilizer, grass seed and mulch per 100 gallons of water.

C. This statement should also specify the number of square yards of seeding that can be covered with the solution specified above. If the results of the spray operation are unsatisfactory, the Contractor will be required to abandon this method and to apply the lime, fertilizer, grass seed and mulch by other methods.

3.05 INSPECTION AND ACCEPTANCE:

At the beginning of the planting season following that in which the permanent grass crop is sown, the seeded areas will be inspected. Any section not showing dense, vigorous growth at that time shall be promptly reseeded by the Contractor at his own expense. The seeded areas shall be watered, weeded, cut and otherwise maintained by the Contractor until the end of that planting season, when they will be accepted if the sections show dense, vigorous growth.

END OF SECTION

O:\Quincy MA\FY 2016 Water Main Project\Design\Specifications\02920 - L&S.docx

SECTION 03302

FIELD CONCRETE

PART 1 - GENERAL

1.01 WORK INCLUDED:

A. This Section covers concrete and all related items necessary to place and finish the concrete work.

B. Concrete thrust, and anchor blocks, to be provided at water main bends, tees, plugs and wyes and at other locations required by the Engineer shall be installed in accordance with the details shown on the drawings and as specified in this section.

C. Concrete encasement for piping with shallow cover and for encasement of telephone, and electrical duct bank when specified shall be installed in accordance with the details shown on the drawings and as specified in this section.

1.02 RELATED WORK:

A. Section 02300, EARTHWORK

B. Section 02080, DUCTILE IRON PIPE AND FITTINGS

1.03 REFERENCES:

A. The following standards form a part of this specification:

American Concrete Institute (ACI)

ACI 304	Recommended Practice for Measuring, Mixing, Transporting, and Placing Concrete.
ACI 305	Recommended Practice for Hot Weather Concreting
ACI 306	Recommended Practice for Cold Weather Concreting
ACI SP-66 ACI	Detailing Manual
ACI 318	Building Code Requirements for Reinforced Concrete

American Society for Testing and Materials (ASTM)

ASTM A615	Deformed and Plain Billet-Steel Bars for Concrete Reinforcement

ASTM C33 Concrete Aggregates

ASTM C94 Ready-Mixed Concrete

ASTM C143 Test for Slump of Portland Cement Concrete

ASTM C150 Portland Cement

ASTM C260 Air Entraining Admixtures for Concrete

ASTM C494 Chemical Admixtures for Concrete

1.04 SUBMITTALS: IN ACCORDANCE WITH REQUIREMENTS OF GENERAL SPECIFICATIONS, SUBMIT THE FOLLOWING:

Six copies of the statement of materials constituting the design of mixes for each size aggregate as required by ASTM C94 shall be submitted to the Engineer within one week following award of the Contract.

PART 2 - PRODUCTS

2.01 CONCRETE:

A. All concrete, reinforced or non-reinforced shall have a 28 day compressive strength of 3000 psi unless otherwise noted on the design drawings. A minimum of 5.5 sacks of cement per cubic yard and a maximum water cement ratio of 6.9 gallons per sack shall be used.

B. Concrete shall conform to ASTM C94. The Contractor shall be responsible for the design of the concrete mixtures. Slump shall be a maximum of 4-inches and a minimum of 2-inches, determined in accordance with ASTM C143.

C. Admixtures shall be as specified in subsection 2.05. No additional admixtures shall be used unless approved by the Engineer.

D. No additional water, except for the amount indicated by the design mix shall be added to the concrete without the prior permission of the Engineer.

2.02 CEMENT:

The cement shall be an approved brand of American manufactured Portland Cement, Type II conforming to the applicable requirements of ASTM C150.

2.03 AGGREGATES

A. Except as otherwise noted, aggregate shall conform to the requirements of ASTM C33.

B. Maximum size aggregate shall be 3/4-inch.

2.04 ADMIXTURES:

A. All concrete (unless otherwise directed) shall contain an air entraining agent. Air entrained concrete shall have air content by volume of 4 to 8 percent for 3/4-inch aggregate.

B. Air entraining agent shall be in accordance with ASTM C260 and shall be Darex AEA, as manufactured by W.R. Grace & Company; Placewel (air entraining Type), as manufactured by Johns Manville; Sika AER as manufactured by Sika Chemical Company; or an approved equal product.

C. Water reducing agent shall be WRDA, as manufactured by W.R Grace & Company; Placewel (non-air entraining Type), as manufactured by Johns Manville; Sika Plastiment as manufactured by Sika Chemical Company; or an approved equal product.

D. Water reducing agent-retarder shall be "Daratard," as manufactured by W.R. Grace & Company; Sika Plastiment as manufactured by Sika Chemical Company; or an approved equal product.

2.05 WATER:

A. Water for concrete shall be potable, free of deleterious amounts of oil, acid, alkali, organic matter and other deleterious substances.

PART 3 - EXECUTION

3.01 PREPARATION:

A. Before placing concrete, forms and the space to be occupied by the concrete shall be thoroughly cleaned, and embedded metal shall be free from dirt, oil, mill scale, loose rust, paint or the material which would tend to reduce the bond.

B. Earth, concrete, masonry, or other water permeable material against which concrete is to be placed shall be thoroughly saturated with water immediately before concrete is placed.

C. No concrete shall be placed until the consolidation of the ground and the arrangement and details of forms and reinforcing have been inspected and approved by the Engineer.

3.02 THRUST AND ANCHOR BLOCKS:

A. Minimum bearing areas for thrust blocks and dimensions of anchor blocks shall be as shown on the drawings.

B. Concrete for thrust and anchor blocks shall be placed against undisturbed earth, and wooden side forms shall be used to provide satisfactory lines and dimensions. Felt roofing paper shall be placed to protect joints. No concrete shall be placed so as to cover joints, bolts or nuts, or to interfere with the removal of the joints.

3.03 FILL CONCRETE:

A. Fill concrete shall be placed in those locations as indicated on the design drawings. Fill concrete shall consist of materials as previously specified, with a minimum 28-day compressive strength of 3000 psi.

B. Before fill concrete is placed, the following procedures shall be used to prepare surfaces; all dirt, scum and laitance shall be removed by chipping and washing. The clean, roughened base surface shall be saturated with water, but shall have no free water on the surface. A coat of 1:2 cement-sand grout, approximately 1/8-inch thick, shall be well scrubbed into the thoroughly dampened concrete base. The concrete fill shall be placed immediately, before grout has dried or set.

C. Fill concrete shall be brought to lines and grades as shown on the design drawings.

3.04 CONCRETE PLACING DURING COLD WEATHER:

A. Concrete shall not be placed on frozen ground, and no frozen material or material containing ice shall be used. Materials for concrete shall be heated when temperature is below 40°F, or is expected to fall to below 40°F, within 73 hours, and the concrete after placing shall be protected by covering, heat, or both.

B. All details of Contractor's handling and protecting of concrete during freezing weather shall be subject to the approval of the Engineer. All procedures shall be in accordance with provisions of ACI 306.

3.05 CONCRETE PLACING DURING HOT WEATHER:

A. Concrete just placed shall be protected from the direct rays of the sun and the forms and reinforcement just prior to placing, shall be sprinkled with cold water. The Contractor shall make every effort to minimize delays, which will result in excessive mixing of the concrete after arrival on the job.

B. During periods of excessively hot weather (90°F or above), ingredients in the concrete shall be cooled insofar as possible and cold mixing water shall be used to maintain the temperature of the concrete at permissible levels all in accordance with the provisions of ACI 305. Any concrete with a temperature above 90°F, when ready for placement, will not be acceptable, and will be rejected.

3.06 FIELD QUALITY CONTROL:

A. Concrete inspection and testing shall be performed by the Engineer or by an inspection laboratory, designated by the Engineer, engaged and paid for by the Owner. Testing equipment shall be supplied by the laboratory, and the preparation of samples and all testing shall be performed by the laboratory personnel. Full assistance and cooperation, concrete for samples, and such auxiliary personnel and equipment as needed shall be provided by the Contractor.

B. At least 4 standard compression test cylinders shall be made and tested and 1 slump test from each day's placement of concrete. A minimum of four compression test cylinders shall be made and tested for each 100 cubic yards of each type and design strength of concrete placed. One cylinder shall be tested at 7 days, and two at 28 days. The fourth cylinder from each set shall be kept until the 28 day test report on the second and third cylinders in the same set has been received. If the average compressive strength of the two 28 day cylinders do not achieve the required level, the Engineer may elect to test the fourth cylinder immediately or test it after 56 days. If job experience indicates additional cylinder tests or other tests are required for proper control or determination of concrete quality, such tests shall be made.

C. The Engineer shall have the right to reject concrete represented by low strength tests. Rejected concrete shall be promptly removed and replaced with concrete conforming to the specification. The decision of the Engineer as to whether substandard concrete is to be accepted or rejected shall be final.

END OF SECTION

O:\Quincy MA\FY 2016 Water Main Project\Design\Specifications\03302 - Field Concrete.docx

APPENDIX A:

WAGE RATES

THE COMMONWEALTH OF MASSACHUSETTS
EXECUTIVE OFFICE OF LABOR AND WORKFORCE DEVELOPMENT
DEPARTMENT OF LABOR STANDARDS

Prevailing Wage Rates

As determined by the Director under the provisions of the Massachusetts General Laws, Chapter 149, Sections 26 to 27H

CHARLES D. BAKER
Governor

KARYN E. POLITO
Lt. Governor

RONALD L. WALKER, II
Secretary

WILLIAM D MCKINNEY
Director

Awarding Authority: City of Quincy DPW

Contract Number:

City/Town: QUINCY

Description of Work: Elm Avenue & Sea Street Water Main Replacements - Replacement of approximately 7,000 feet of 8-inch and 12-inch Water Main and appurtenances.

Job Location: Quincy, MA 02169

Information about Prevailing Wage Schedules for Awarding Authorities and Contractors

- This wage schedule applies only to the specific project referenced at the top of this page and uniquely identified by the "Wage Request Number" on all pages of this schedule.
- An Awarding Authority must request an updated wage schedule from the Department of Labor Standards ("DLS") if it has not opened bids or selected a contractor within 90 days of the date of issuance of the wage schedule. For CM AT RISK projects (bid pursuant to G.L. c.149A), the earlier of: (a) the execution date of the GMP Amendment, or (b) the bid for the first construction scope of work must be within 90-days of the wage schedule issuance date.
- The wage schedule shall be incorporated in any advertisement or call for bids for the project as required by M.G.L. c. 149, § 27. The wage schedule shall be made a part of the contract awarded for the project. The wage schedule must be posted in a conspicuous place at the work site for the life of the project in accordance with M.G.L. c. 149 § 27. The wages listed on the wage schedule must be paid to employees performing construction work on the project whether they are employed by the prime contractor, a filed sub-bidder, or any sub-contractor.
- All apprentices working on the project are required to be registered with the Massachusetts Department of Labor Standards, Division of Apprentice Standards (DLS/DAS). Apprentice must keep his/her apprentice identification card on his/her person during all work hours on the project. An apprentice registered with DAS may be paid the lower apprentice wage rate at the applicable step as provided on the prevailing wage schedule. **Any apprentice not registered with DLS/DAS regardless of whether or not they are registered with any other federal, state, local, or private agency must be paid the journeyworker's rate for the trade.**
- The wage rates will remain in effect for the duration of the project, except in the case of multi-year public construction projects. For construction projects lasting longer than one year, awarding authorities must request an updated wage schedule. Awarding authorities are required to request these updates no later than two weeks before the anniversary of the date the contract was executed by the awarding authority and the general contractor. For multi-year CM AT RISK projects, awarding authority must request an annual update no later than two weeks before the anniversary date, determined as the earlier of: (a) the execution date of the GMP Amendment, or (b) the execution date of the first amendment to permit procurement of construction services. Contractors are required to obtain the wage schedules from awarding authorities, and to pay no less than these rates to covered workers. The annual update requirement is not applicable to 27F "rental of equipment" contracts.
- Every contractor or subcontractor which performs construction work on the project is required to submit weekly payroll reports and a Statement of Compliance directly to the awarding authority by mail or email and keep them on file for three years. Each weekly payroll report must contain: the employee's name, address, occupational classification, hours worked, and wages paid. Do not submit weekly payroll reports to DLS. A sample of a payroll reporting form may be obtained at http://www.mass.gov/dols/pw.
- Contractors with questions about the wage rates or classifications included on the wage schedule have an affirmative obligation to inquire with DLS at (617) 626-6953.
- Employees not receiving the prevailing wage rate set forth on the wage schedule may report the violation to the Fair Labor Division of the office of the Attorney General at (617) 727-3465.
- Failure of a contractor or subcontractor to pay the prevailing wage rates listed on the wage schedule to all employees who perform construction work on the project is a violation of the law and subjects the contractor or subcontractor to civil and

Classification	Effective Date	Base Wage	Health	Pension	Supplemental Unemployment	Total Rate
Construction						
(2 AXLE) DRIVER - EQUIPMENT *TEAMSTERS JOINT COUNCIL NO. 10 ZONE A*	06/01/2016	$33.25	$10.41	$10.08	$0.00	$53.74
	08/01/2016	$33.25	$10.91	$10.08	$0.00	$54.24
	12/01/2016	$33.25	$10.91	$10.89	$0.00	$55.05
(3 AXLE) DRIVER - EQUIPMENT *TEAMSTERS JOINT COUNCIL NO. 10 ZONE A*	06/01/2016	$33.32	$10.41	$10.08	$0.00	$53.81
	08/01/2016	$33.32	$10.91	$10.08	$0.00	$54.31
	12/01/2016	$33.32	$10.91	$10.89	$0.00	$55.12
(4 & 5 AXLE) DRIVER - EQUIPMENT *TEAMSTERS JOINT COUNCIL NO. 10 ZONE A*	06/01/2016	$33.44	$10.41	$10.08	$0.00	$53.93
	08/01/2016	$33.44	$10.91	$10.08	$0.00	$54.43
	12/01/2016	$33.44	$10.91	$10.89	$0.00	$55.24
ADS/SUBMERSIBLE PILOT *PILE DRIVER LOCAL 56 (ZONE 1)*	08/01/2015	$88.29	$9.80	$19.23	$0.00	$117.32
For apprentice rates see "Apprentice- PILE DRIVER"						
AIR TRACK OPERATOR *LABORERS - ZONE 1*	06/01/2016	$36.85	$7.45	$13.55	$0.00	$57.85
	12/01/2016	$37.85	$7.45	$13.55	$0.00	$58.85
For apprentice rates see "Apprentice- LABORER"						
ASBESTOS REMOVER - PIPE / MECH. EQUIPT. *HEAT & FROST INSULATORS LOCAL 6 (BOSTON)*	12/01/2015	$34.38	$10.40	$5.95	$0.00	$50.73
ASPHALT RAKER *LABORERS - ZONE 1*	06/01/2016	$36.35	$7.45	$13.55	$0.00	$57.35
	12/01/2016	$37.35	$7.45	$13.55	$0.00	$58.35
For apprentice rates see "Apprentice- LABORER"						
ASPHALT/CONCRETE/CRUSHER PLANT-ON SITE *OPERATING ENGINEERS LOCAL 4*	06/01/2016	$44.23	$10.00	$15.15	$0.00	$69.38
	12/01/2016	$45.48	$10.00	$15.15	$0.00	$70.63
	06/01/2017	$46.48	$10.00	$15.15	$0.00	$71.63
	12/01/2017	$47.48	$10.00	$15.15	$0.00	$72.63
For apprentice rates see "Apprentice- OPERATING ENGINEERS"						
BACKHOE/FRONT-END LOADER *OPERATING ENGINEERS LOCAL 4*	06/01/2016	$44.23	$10.00	$15.15	$0.00	$69.38
	12/01/2016	$45.48	$10.00	$15.15	$0.00	$70.63
	06/01/2017	$46.48	$10.00	$15.15	$0.00	$71.63
	12/01/2017	$47.48	$10.00	$15.15	$0.00	$72.63
For apprentice rates see "Apprentice- OPERATING ENGINEERS"						
BARCO-TYPE JUMPING TAMPER *LABORERS - ZONE 1*	06/01/2016	$36.35	$7.45	$13.55	$0.00	$57.35
	12/01/2016	$37.35	$7.45	$13.55	$0.00	$58.35
For apprentice rates see "Apprentice- LABORER"						
BLOCK PAVER, RAMMER / CURB SETTER *LABORERS - ZONE 1*	06/01/2016	$36.85	$7.45	$13.55	$0.00	$57.85
	12/01/2016	$37.85	$7.45	$13.55	$0.00	$58.85
For apprentice rates see "Apprentice- LABORER"						
BOILER MAKER *BOILERMAKERS LOCAL 29*	01/01/2016	$41.62	$6.97	$16.21	$0.00	$64.80
	01/01/2017	$42.92	$6.97	$16.21	$0.00	$66.10

Classification	Effective Date	Base Wage	Health	Pension	Supplemental Unemployment	Total Rate

Apprentice - *BOILERMAKER - Local 29*

Effective Date - 01/01/2016

Step	percent	Apprentice Base Wage	Health	Pension	Supplemental Unemployment	Total Rate
1	65	$27.05	$6.97	$10.54	$0.00	$44.56
2	65	$27.05	$6.97	$10.54	$0.00	$44.56
3	70	$29.13	$6.97	$11.35	$0.00	$47.45
4	75	$31.22	$6.97	$12.16	$0.00	$50.35
5	80	$33.30	$6.97	$12.97	$0.00	$53.24
6	85	$35.38	$6.97	$13.78	$0.00	$56.13
7	90	$37.46	$6.97	$14.59	$0.00	$59.02
8	95	$39.54	$6.97	$15.40	$0.00	$61.91

Effective Date - 01/01/2017

Step	percent	Apprentice Base Wage	Health	Pension	Supplemental Unemployment	Total Rate
1	65	$27.90	$6.97	$10.54	$0.00	$45.41
2	65	$27.90	$6.97	$10.54	$0.00	$45.41
3	70	$30.04	$6.97	$11.35	$0.00	$48.36
4	75	$32.19	$6.97	$12.16	$0.00	$51.32
5	80	$34.34	$6.97	$12.97	$0.00	$54.28
6	85	$36.48	$6.97	$13.78	$0.00	$57.23
7	90	$38.63	$6.97	$14.59	$0.00	$60.19
8	95	$40.77	$6.97	$15.40	$0.00	$63.14

Notes:

Apprentice to Journeyworker Ratio:1:5

BRICK/STONE/ARTIFICIAL MASONRY (INCL. MASONRY WATERPROOFING) *BRICKLAYERS LOCAL 3 (QUINCY)*	02/01/2016	$49.86	$10.18	$19.14	$0.00	$79.18
	08/01/2016	$50.76	$10.18	$19.22	$0.00	$80.16
	02/01/2017	$51.33	$10.18	$19.22	$0.00	$80.73

Classification	Effective Date	Base Wage	Health	Pension	Supplemental Unemployment	Total Rate

Apprentice - *BRICK/PLASTER/CEMENT MASON - Local 3 Quincy*

Effective Date - 02/01/2016

Step	percent	Apprentice Base Wage	Health	Pension	Supplemental Unemployment	Total Rate
1	50	$24.93	$10.18	$19.14	$0.00	$54.25
2	60	$29.92	$10.18	$19.14	$0.00	$59.24
3	70	$34.90	$10.18	$19.14	$0.00	$64.22
4	80	$39.89	$10.18	$19.14	$0.00	$69.21
5	90	$44.87	$10.18	$19.14	$0.00	$74.19

Effective Date - 08/01/2016

Step	percent	Apprentice Base Wage	Health	Pension	Supplemental Unemployment	Total Rate
1	50	$25.38	$10.18	$19.22	$0.00	$54.78
2	60	$30.46	$10.18	$19.22	$0.00	$59.86
3	70	$35.53	$10.18	$19.22	$0.00	$64.93
4	80	$40.61	$10.18	$19.22	$0.00	$70.01
5	90	$45.68	$10.18	$19.22	$0.00	$75.08

Notes:

Apprentice to Journeyworker Ratio:1:5

BULLDOZER/GRADER/SCRAPER *OPERATING ENGINEERS LOCAL 4*	06/01/2016	$43.81	$10.00	$15.15	$0.00	$68.96
	12/01/2016	$45.04	$10.00	$15.15	$0.00	$70.19
	06/01/2017	$46.03	$10.00	$15.15	$0.00	$71.18
	12/01/2017	$47.02	$10.00	$15.15	$0.00	$72.17
For apprentice rates see "Apprentice- OPERATING ENGINEERS"						
CAISSON & UNDERPINNING BOTTOM MAN *LABORERS - FOUNDATION AND MARINE*	06/01/2016	$37.20	$7.45	$13.75	$0.00	$58.40
	12/01/2016	$38.20	$7.45	$13.75	$0.00	$59.40
For apprentice rates see "Apprentice- LABORER"						
CAISSON & UNDERPINNING LABORER *LABORERS - FOUNDATION AND MARINE*	06/01/2016	$36.05	$7.45	$13.75	$0.00	$57.25
	12/01/2016	$37.05	$7.45	$13.75	$0.00	$58.25
For apprentice rates see "Apprentice- LABORER"						
CAISSON & UNDERPINNING TOP MAN *LABORERS - FOUNDATION AND MARINE*	06/01/2016	$36.05	$7.45	$13.75	$0.00	$57.25
	12/01/2016	$37.05	$7.45	$13.75	$0.00	$58.25
For apprentice rates see "Apprentice- LABORER"						
CARBIDE CORE DRILL OPERATOR *LABORERS - ZONE 1*	06/01/2016	$36.35	$7.45	$13.55	$0.00	$57.35
	12/01/2016	$37.35	$7.45	$13.55	$0.00	$58.35
For apprentice rates see "Apprentice- LABORER"						
CARPENTER *CARPENTERS -ZONE 2 (Eastern Massachusetts)*	03/01/2016	$37.10	$9.80	$16.82	$0.00	$63.72
	09/01/2016	$38.08	$9.80	$16.82	$0.00	$64.70
	03/01/2017	$39.05	$9.80	$16.82	$0.00	$65.67
	09/01/2017	$40.06	$9.80	$16.82	$0.00	$66.68
	03/01/2018	$41.06	$9.80	$16.82	$0.00	$67.68
	09/01/2018	$42.10	$9.80	$16.82	$0.00	$68.72
	03/01/2019	$43.13	$9.80	$16.82	$0.00	$69.75

Classification	Effective Date	Base Wage	Health	Pension	Supplemental Unemployment	Total Rate

Apprentice - *CARPENTER - Zone 2 Eastern MA*

Effective Date - 03/01/2016

Step	percent	Apprentice Base Wage	Health	Pension	Supplemental Unemployment	Total Rate
1	50	$18.55	$9.80	$1.63	$0.00	$29.98
2	60	$22.26	$9.80	$1.63	$0.00	$33.69
3	70	$25.97	$9.80	$11.93	$0.00	$47.70
4	75	$27.83	$9.80	$11.93	$0.00	$49.56
5	80	$29.68	$9.80	$13.56	$0.00	$53.04
6	80	$29.68	$9.80	$13.56	$0.00	$53.04
7	90	$33.39	$9.80	$15.19	$0.00	$58.38
8	90	$33.39	$9.80	$15.19	$0.00	$58.38

Effective Date - 09/01/2016

Step	percent	Apprentice Base Wage	Health	Pension	Supplemental Unemployment	Total Rate
1	50	$19.04	$9.80	$1.63	$0.00	$30.47
2	60	$22.85	$9.80	$1.63	$0.00	$34.28
3	70	$26.66	$9.80	$11.93	$0.00	$48.39
4	75	$28.56	$9.80	$11.93	$0.00	$50.29
5	80	$30.46	$9.80	$13.56	$0.00	$53.82
6	80	$30.46	$9.80	$13.56	$0.00	$53.82
7	90	$34.27	$9.80	$15.19	$0.00	$59.26
8	90	$34.27	$9.80	$15.19	$0.00	$59.26

Notes:

Apprentice to Journeyworker Ratio:1:5

CEMENT MASONRY/PLASTERING *BRICKLAYERS LOCAL 3 (QUINCY)*	01/01/2016	$46.44	$10.90	$18.71	$1.30	$77.35

Apprentice - *CEMENT MASONRY/PLASTERING - Eastern Mass (Quincy)*

Effective Date - 01/01/2016

Step	percent	Apprentice Base Wage	Health	Pension	Supplemental Unemployment	Total Rate
1	50	$23.22	$10.90	$12.21	$0.00	$46.33
2	60	$27.86	$10.90	$13.71	$1.30	$53.77
3	65	$30.19	$10.90	$14.71	$1.30	$57.10
4	70	$32.51	$10.90	$15.71	$1.30	$60.42
5	75	$34.83	$10.90	$16.71	$1.30	$63.74
6	80	$37.15	$10.90	$17.71	$1.30	$67.06
7	90	$41.80	$10.90	$18.71	$1.30	$72.71

Notes:

Steps 3,4 are 500 hrs. All other steps are 1,000 hrs.

Apprentice to Journeyworker Ratio:1:3

Classification	Effective Date	Base Wage	Health	Pension	Supplemental Unemployment	Total Rate
CHAIN SAW OPERATOR *LABORERS - ZONE 1*	06/01/2016	$36.35	$7.45	$13.55	$0.00	$57.35
	12/01/2016	$37.35	$7.45	$13.55	$0.00	$58.35
For apprentice rates see "Apprentice- LABORER"						
CLAM SHELLS/SLURRY BUCKETS/HEADING MACHINES *OPERATING ENGINEERS LOCAL 4*	06/01/2016	$45.23	$10.00	$15.15	$0.00	$70.38
	12/01/2016	$46.48	$10.00	$15.15	$0.00	$71.63
	06/01/2017	$47.48	$10.00	$15.15	$0.00	$72.63
	12/01/2017	$48.48	$10.00	$15.15	$0.00	$73.63
For apprentice rates see "Apprentice- OPERATING ENGINEERS"						
COMPRESSOR OPERATOR *OPERATING ENGINEERS LOCAL 4*	06/01/2016	$30.40	$10.00	$15.15	$0.00	$55.55
	12/01/2016	$31.27	$10.00	$15.15	$0.00	$56.42
	06/01/2017	$31.96	$10.00	$15.15	$0.00	$57.11
	12/01/2017	$32.65	$10.00	$15.15	$0.00	$57.80
For apprentice rates see "Apprentice- OPERATING ENGINEERS"						
DELEADER (BRIDGE) *PAINTERS LOCAL 35 - ZONE 2*	01/01/2016	$49.51	$7.85	$16.10	$0.00	$73.46
	07/01/2016	$50.46	$7.85	$16.10	$0.00	$74.41
	01/01/2017	$51.41	$7.85	$16.10	$0.00	$75.36

Apprentice - *PAINTER Local 35 - BRIDGES/TANKS*

Effective Date - 01/01/2016

Step	percent	Apprentice Base Wage	Health	Pension	Supplemental Unemployment	Total Rate
1	50	$24.76	$7.85	$0.00	$0.00	$32.61
2	55	$27.23	$7.85	$3.66	$0.00	$38.74
3	60	$29.71	$7.85	$3.99	$0.00	$41.55
4	65	$32.18	$7.85	$4.32	$0.00	$44.35
5	70	$34.66	$7.85	$14.11	$0.00	$56.62
6	75	$37.13	$7.85	$14.44	$0.00	$59.42
7	80	$39.61	$7.85	$14.77	$0.00	$62.23
8	90	$44.56	$7.85	$15.44	$0.00	$67.85

Effective Date - 07/01/2016

Step	percent	Apprentice Base Wage	Health	Pension	Supplemental Unemployment	Total Rate
1	50	$25.23	$7.85	$0.00	$0.00	$33.08
2	55	$27.75	$7.85	$3.66	$0.00	$39.26
3	60	$30.28	$7.85	$3.99	$0.00	$42.12
4	65	$32.80	$7.85	$4.32	$0.00	$44.97
5	70	$35.32	$7.85	$14.11	$0.00	$57.28
6	75	$37.85	$7.85	$14.44	$0.00	$60.14
7	80	$40.37	$7.85	$14.77	$0.00	$62.99
8	90	$45.41	$7.85	$15.44	$0.00	$68.70

Notes:

Steps are 750 hrs.

Apprentice to Journeyworker Ratio:1:1

DEMO: ADZEMAN *LABORERS - ZONE 1*	12/01/2015	$35.50	$7.45	$13.55	$0.00	$56.50

Classification	Effective Date	Base Wage	Health	Pension	Supplemental Unemployment	Total Rate
For apprentice rates see "Apprentice- LABORER"						
DEMO: BACKHOE/LOADER/HAMMER OPERATOR *LABORERS - ZONE 1*	12/01/2015	$36.50	$7.45	$13.55	$0.00	$57.50
For apprentice rates see "Apprentice- LABORER"						
DEMO: BURNERS *LABORERS - ZONE 1*	12/01/2015	$36.25	$7.45	$13.55	$0.00	$57.25
For apprentice rates see "Apprentice- LABORER"						
DEMO: CONCRETE CUTTER/SAWYER *LABORERS - ZONE 1*	12/01/2015	$36.50	$7.45	$13.55	$0.00	$57.50
For apprentice rates see "Apprentice- LABORER"						
DEMO: JACKHAMMER OPERATOR *LABORERS - ZONE 1*	12/01/2015	$36.25	$7.45	$13.55	$0.00	$57.25
For apprentice rates see "Apprentice- LABORER"						
DEMO: WRECKING LABORER *LABORERS - ZONE 1*	12/01/2015	$35.50	$7.45	$13.55	$0.00	$56.50
For apprentice rates see "Apprentice- LABORER"						
DIRECTIONAL DRILL MACHINE OPERATOR *OPERATING ENGINEERS LOCAL 4*	06/01/2016	$43.81	$10.00	$15.15	$0.00	$68.96
	12/01/2016	$45.04	$10.00	$15.15	$0.00	$70.19
	06/01/2017	$46.03	$10.00	$15.15	$0.00	$71.18
	12/01/2017	$47.02	$10.00	$15.15	$0.00	$72.17
For apprentice rates see "Apprentice- OPERATING ENGINEERS"						
DIVER *PILE DRIVER LOCAL 56 (ZONE 1)*	08/01/2015	$58.86	$9.80	$19.23	$0.00	$87.89
For apprentice rates see "Apprentice- PILE DRIVER"						
DIVER TENDER *PILE DRIVER LOCAL 56 (ZONE 1)*	08/01/2015	$42.04	$9.80	$19.23	$0.00	$71.07
For apprentice rates see "Apprentice- PILE DRIVER"						
DIVER TENDER (EFFLUENT) *PILE DRIVER LOCAL 56 (ZONE 1)*	08/01/2015	$63.06	$9.80	$19.23	$0.00	$92.09
For apprentice rates see "Apprentice- PILE DRIVER"						
DIVER/SLURRY (EFFLUENT) *PILE DRIVER LOCAL 56 (ZONE 1)*	08/01/2015	$88.23	$9.80	$19.23	$0.00	$117.26
For apprentice rates see "Apprentice- PILE DRIVER"						
DRAWBRIDGE OPERATOR (Construction) *ELECTRICIANS LOCAL 103*	03/01/2016	$46.17	$13.00	$16.39	$0.00	$75.56
For apprentice rates see "Apprentice- ELECTRICIAN"						
ELECTRICIAN *ELECTRICIANS LOCAL 103*	03/01/2016	$46.17	$13.00	$16.39	$0.00	$75.56

Classification	Effective Date	Base Wage	Health	Pension	Supplemental Unemployment	Total Rate

Apprentice - *ELECTRICIAN - Local 103*

Effective Date - 03/01/2016

Step	percent	Apprentice Base Wage	Health	Pension	Supplemental Unemployment	Total Rate
1	40	$18.47	$13.00	$0.55	$0.00	$32.02
2	40	$18.47	$13.00	$0.55	$0.00	$32.02
3	45	$20.78	$13.00	$12.34	$0.00	$46.12
4	45	$20.78	$13.00	$12.34	$0.00	$46.12
5	50	$23.09	$13.00	$12.71	$0.00	$48.80
6	55	$25.39	$13.00	$13.07	$0.00	$51.46
7	60	$27.70	$13.00	$13.44	$0.00	$54.14
8	65	$30.01	$13.00	$13.81	$0.00	$56.82
9	70	$32.32	$13.00	$14.18	$0.00	$59.50
10	75	$34.63	$13.00	$14.55	$0.00	$62.18

Notes: :
App Prior 1/1/03; 30/35/40/45/50/55/65/70/75/80

Apprentice to Journeyworker Ratio:2:3***

ELEVATOR CONSTRUCTOR *ELEVATOR CONSTRUCTORS LOCAL 4*	01/01/2016	$54.53	$14.43	$14.96	$0.00	$83.92
	01/01/2017	$55.86	$15.28	$15.71	$0.00	$86.85

Apprentice - *ELEVATOR CONSTRUCTOR - Local 4*

Effective Date - 01/01/2016

Step	percent	Apprentice Base Wage	Health	Pension	Supplemental Unemployment	Total Rate
1	50	$27.27	$14.43	$0.00	$0.00	$41.70
2	55	$29.99	$14.43	$14.96	$0.00	$59.38
3	65	$35.44	$14.43	$14.96	$0.00	$64.83
4	70	$38.17	$14.43	$14.96	$0.00	$67.56
5	80	$43.62	$14.43	$14.96	$0.00	$73.01

Effective Date - 01/01/2017

Step	percent	Apprentice Base Wage	Health	Pension	Supplemental Unemployment	Total Rate
1	50	$27.93	$15.28	$0.00	$0.00	$43.21
2	55	$30.72	$15.28	$15.71	$0.00	$61.71
3	65	$36.31	$15.28	$15.71	$0.00	$67.30
4	70	$39.10	$15.28	$15.71	$0.00	$70.09
5	80	$44.69	$15.28	$15.71	$0.00	$75.68

Notes:
Steps 1-2 are 6 mos.; Steps 3-5 are 1 year

Apprentice to Journeyworker Ratio:1:1

ELEVATOR CONSTRUCTOR HELPER *ELEVATOR CONSTRUCTORS LOCAL 4*	01/01/2016	$38.17	$14.43	$14.96	$0.00	$67.56
	01/01/2017	$39.10	$15.28	$15.71	$0.00	$70.09

For apprentice rates see "Apprentice - ELEVATOR CONSTRUCTOR"

Classification	Effective Date	Base Wage	Health	Pension	Supplemental Unemployment	Total Rate
FENCE & GUARD RAIL ERECTOR *LABORERS - ZONE 1*	06/01/2016	$36.35	$7.45	$13.55	$0.00	$57.35
	12/01/2016	$37.35	$7.45	$13.55	$0.00	$58.35
For apprentice rates see "Apprentice- LABORER"						
FIELD ENG.INST.PERSON-BLDG,SITE,HVY/HWY *OPERATING ENGINEERS LOCAL 4*	05/01/2016	$41.03	$10.00	$14.90	$0.00	$65.93
	11/01/2016	$41.62	$10.00	$14.90	$0.00	$66.52
	05/01/2017	$42.50	$10.00	$14.90	$0.00	$67.40
	11/01/2017	$43.23	$10.00	$14.90	$0.00	$68.13
	05/01/2018	$43.94	$10.00	$14.90	$0.00	$68.84
For apprentice rates see "Apprentice- OPERATING ENGINEERS"						
FIELD ENG.PARTY CHIEF-BLDG,SITE,HVY/HWY *OPERATING ENGINEERS LOCAL 4*	05/01/2016	$42.47	$10.00	$14.90	$0.00	$67.37
	11/01/2016	$43.07	$10.00	$14.90	$0.00	$67.97
	05/01/2017	$43.96	$10.00	$14.90	$0.00	$68.86
	11/01/2017	$44.69	$10.00	$14.90	$0.00	$69.59
	05/01/2018	$45.41	$10.00	$14.90	$0.00	$70.31
For apprentice rates see "Apprentice- OPERATING ENGINEERS"						
FIELD ENG.ROD PERSON-BLDG,SITE,HVY/HWY *OPERATING ENGINEERS LOCAL 4*	05/01/2016	$21.88	$10.00	$14.90	$0.00	$46.78
	11/01/2016	$22.23	$10.00	$14.90	$0.00	$47.13
	05/01/2017	$22.76	$10.00	$14.90	$0.00	$47.66
	11/01/2017	$23.18	$10.00	$14.90	$0.00	$48.08
	05/01/2018	$23.61	$10.00	$14.90	$0.00	$48.51
For apprentice rates see "Apprentice- OPERATING ENGINEERS"						
FIRE ALARM INSTALLER *ELECTRICIANS LOCAL 103*	03/01/2016	$46.17	$13.00	$16.39	$0.00	$75.56
For apprentice rates see "Apprentice- ELECTRICIAN"						
FIRE ALARM REPAIR / MAINTENANCE / COMMISSIONING*ELECTRICIANS LOCAL 103*	03/01/2016	$34.63	$13.00	$14.55	$0.00	$62.18
For apprentice rates see "Apprentice- TELECOMMUNICATIONS TECHNICIAN"						
FIREMAN (ASST. ENGINEER) *OPERATING ENGINEERS LOCAL 4*	06/01/2016	$36.71	$10.00	$15.15	$0.00	$61.86
	12/01/2016	$37.75	$10.00	$15.15	$0.00	$62.90
	06/01/2017	$38.59	$10.00	$15.15	$0.00	$63.74
	12/01/2017	$39.42	$10.00	$15.15	$0.00	$64.57
For apprentice rates see "Apprentice- OPERATING ENGINEERS"						
FLAGGER & SIGNALER *LABORERS - ZONE 1*	06/01/2016	$20.50	$7.45	$13.55	$0.00	$41.50
	12/01/2016	$20.50	$7.45	$13.55	$0.00	$41.50
For apprentice rates see "Apprentice- LABORER"						
FLOORCOVERER *FLOORCOVERERS LOCAL 2168 ZONE I*	03/01/2016	$42.13	$9.80	$17.62	$0.00	$69.55

Classification	Effective Date	Base Wage	Health	Pension	Supplemental Unemployment	Total Rate

Apprentice - *FLOORCOVERER - Local 2168 Zone I*

Effective Date - 03/01/2016

Step	percent	Apprentice Base Wage	Health	Pension	Supplemental Unemployment	Total Rate
1	50	$21.07	$9.80	$1.79	$0.00	$32.66
2	55	$23.17	$9.80	$1.79	$0.00	$34.76
3	60	$25.28	$9.80	$12.25	$0.00	$47.33
4	65	$27.38	$9.80	$12.25	$0.00	$49.43
5	70	$29.49	$9.80	$14.04	$0.00	$53.33
6	75	$31.60	$9.80	$14.04	$0.00	$55.44
7	80	$33.70	$9.80	$15.83	$0.00	$59.33
8	85	$35.81	$9.80	$15.83	$0.00	$61.44

Notes:

Steps are 750 hrs.

Apprentice to Journeyworker Ratio:1:1

FORK LIFT/CHERRY PICKER *OPERATING ENGINEERS LOCAL 4*	06/01/2016	$44.23	$10.00	$15.15	$0.00	$69.38
	12/01/2016	$45.48	$10.00	$15.15	$0.00	$70.63
	06/01/2017	$46.48	$10.00	$15.15	$0.00	$71.63
	12/01/2017	$47.48	$10.00	$15.15	$0.00	$72.63
For apprentice rates see "Apprentice- OPERATING ENGINEERS"						
GENERATOR/LIGHTING PLANT/HEATERS *OPERATING ENGINEERS LOCAL 4*	06/01/2016	$30.40	$10.00	$15.15	$0.00	$55.55
	12/01/2016	$31.27	$10.00	$15.15	$0.00	$56.42
	06/01/2017	$31.96	$10.00	$15.15	$0.00	$57.11
	12/01/2017	$32.65	$10.00	$15.15	$0.00	$57.80
For apprentice rates see "Apprentice- OPERATING ENGINEERS"						
GLAZIER (GLASS PLANK/AIR BARRIER/INTERIOR SYSTEMS) *GLAZIERS LOCAL 35 (ZONE 2)*	01/01/2016	$39.01	$7.85	$16.10	$0.00	$62.96
	07/01/2016	$39.96	$7.85	$16.10	$0.00	$63.91
	01/01/2017	$40.91	$7.85	$16.10	$0.00	$64.86

Classification	Effective Date	Base Wage	Health	Pension	Supplemental Unemployment	Total Rate

Apprentice - *GLAZIER - Local 35 Zone 2*

Effective Date - 01/01/2016

Step	percent	Apprentice Base Wage	Health	Pension	Supplemental Unemployment	Total Rate
1	50	$19.51	$7.85	$0.00	$0.00	$27.36
2	55	$21.46	$7.85	$3.66	$0.00	$32.97
3	60	$23.41	$7.85	$3.99	$0.00	$35.25
4	65	$25.36	$7.85	$4.32	$0.00	$37.53
5	70	$27.31	$7.85	$14.11	$0.00	$49.27
6	75	$29.26	$7.85	$14.44	$0.00	$51.55
7	80	$31.21	$7.85	$14.77	$0.00	$53.83
8	90	$35.11	$7.85	$15.44	$0.00	$58.40

Effective Date - 07/01/2016

Step	percent	Apprentice Base Wage	Health	Pension	Supplemental Unemployment	Total Rate
1	50	$19.98	$7.85	$0.00	$0.00	$27.83
2	55	$21.98	$7.85	$3.66	$0.00	$33.49
3	60	$23.98	$7.85	$3.99	$0.00	$35.82
4	65	$25.97	$7.85	$4.32	$0.00	$38.14
5	70	$27.97	$7.85	$14.11	$0.00	$49.93
6	75	$29.97	$7.85	$14.44	$0.00	$52.26
7	80	$31.97	$7.85	$14.77	$0.00	$54.59
8	90	$35.96	$7.85	$15.44	$0.00	$59.25

Notes:

Steps are 750 hrs.

Apprentice to Journeyworker Ratio:1:1

HOISTING ENGINEER/CRANES/GRADALLS *OPERATING ENGINEERS LOCAL 4*	06/01/2016	$44.23	$10.00	$15.15	$0.00	$69.38
	12/01/2016	$45.48	$10.00	$15.15	$0.00	$70.63
	06/01/2017	$46.48	$10.00	$15.15	$0.00	$71.63
	12/01/2017	$47.48	$10.00	$15.15	$0.00	$72.63

Classification	Effective Date	Base Wage	Health	Pension	Supplemental Unemployment	Total Rate

Apprentice - *OPERATING ENGINEERS - Local 4*

Effective Date - 06/01/2016

Step	percent	Apprentice Base Wage	Health	Pension	Supplemental Unemployment	Total Rate
1	55	$24.33	$10.00	$0.00	$0.00	$34.33
2	60	$26.54	$10.00	$15.15	$0.00	$51.69
3	65	$28.75	$10.00	$15.15	$0.00	$53.90
4	70	$30.96	$10.00	$15.15	$0.00	$56.11
5	75	$33.17	$10.00	$15.15	$0.00	$58.32
6	80	$35.38	$10.00	$15.15	$0.00	$60.53
7	85	$37.60	$10.00	$15.15	$0.00	$62.75
8	90	$39.81	$10.00	$15.15	$0.00	$64.96

Effective Date - 12/01/2016

Step	percent	Apprentice Base Wage	Health	Pension	Supplemental Unemployment	Total Rate
1	55	$25.01	$10.00	$0.00	$0.00	$35.01
2	60	$27.29	$10.00	$15.15	$0.00	$52.44
3	65	$29.56	$10.00	$15.15	$0.00	$54.71
4	70	$31.84	$10.00	$15.15	$0.00	$56.99
5	75	$34.11	$10.00	$15.15	$0.00	$59.26
6	80	$36.38	$10.00	$15.15	$0.00	$61.53
7	85	$38.66	$10.00	$15.15	$0.00	$63.81
8	90	$40.93	$10.00	$15.15	$0.00	$66.08

Notes:

Apprentice to Journeyworker Ratio:1:6

HVAC (DUCTWORK) *SHEETMETAL WORKERS LOCAL 17 - A*	02/01/2016	$43.31	$10.70	$21.95	$2.28	$78.24
	08/01/2016	$44.46	$10.70	$21.95	$2.28	$79.39
	02/01/2017	$45.56	$10.70	$21.95	$2.28	$80.49
	08/01/2017	$46.66	$10.70	$21.95	$2.28	$81.59
	02/01/2018	$47.81	$10.70	$21.95	$2.28	$82.74
For apprentice rates see "Apprentice- SHEET METAL WORKER"						
HVAC (ELECTRICAL CONTROLS) *ELECTRICIANS LOCAL 103*	03/01/2016	$46.17	$13.00	$16.39	$0.00	$75.56
For apprentice rates see "Apprentice- ELECTRICIAN"						
HVAC (TESTING AND BALANCING - AIR) *SHEETMETAL WORKERS LOCAL 17 - A*	02/01/2016	$43.31	$10.70	$21.95	$2.28	$78.24
	08/01/2016	$44.46	$10.70	$21.95	$2.28	$79.39
	02/01/2017	$45.56	$10.70	$21.95	$2.28	$80.49
	08/01/2017	$46.66	$10.70	$21.95	$2.28	$81.59
	02/01/2018	$47.81	$10.70	$21.95	$2.28	$82.74
For apprentice rates see "Apprentice- SHEET METAL WORKER"						
HVAC (TESTING AND BALANCING -WATER) *PIPEFITTERS LOCAL 537*	03/01/2016	$49.19	$9.70	$18.14	$0.00	$77.03
	09/01/2016	$50.19	$9.70	$18.14	$0.00	$78.03
	03/01/2017	$51.19	$9.70	$18.14	$0.00	$79.03
For apprentice rates see "Apprentice- PIPEFITTER" or "PLUMBER/PIPEFITTER"						

Classification	Effective Date	Base Wage	Health	Pension	Supplemental Unemployment	Total Rate
HVAC MECHANIC *PIPEFITTERS LOCAL 537*	03/01/2016	$49.19	$9.70	$18.14	$0.00	$77.03
	09/01/2016	$50.19	$9.70	$18.14	$0.00	$78.03
	03/01/2017	$51.19	$9.70	$18.14	$0.00	$79.03
For apprentice rates see "Apprentice- PIPEFITTER" or "PLUMBER/PIPEFITTER"						
HYDRAULIC DRILLS *LABORERS - ZONE 1*	06/01/2016	$36.85	$7.45	$13.55	$0.00	$57.85
	12/01/2016	$37.85	$7.45	$13.55	$0.00	$58.85
For apprentice rates see "Apprentice- LABORER"						
INSULATOR (PIPES & TANKS) *HEAT & FROST INSULATORS LOCAL 6 (BOSTON)*	09/01/2015	$43.81	$11.50	$13.80	$0.00	$69.11
	09/01/2016	$45.81	$11.50	$13.80	$0.00	$71.11
	09/01/2017	$47.81	$11.50	$13.80	$0.00	$73.11
	09/01/2018	$50.06	$11.50	$13.80	$0.00	$75.36
	09/01/2019	$52.56	$11.50	$13.80	$0.00	$77.86

Apprentice - *ASBESTOS INSULATOR (Pipes & Tanks) - Local 6 Boston*

Effective Date - 09/01/2015

Step	percent	Apprentice Base Wage	Health	Pension	Supplemental Unemployment	Total Rate
1	50	$21.91	$11.50	$10.05	$0.00	$43.46
2	60	$26.29	$11.50	$10.80	$0.00	$48.59
3	70	$30.67	$11.50	$11.55	$0.00	$53.72
4	80	$35.05	$11.50	$12.30	$0.00	$58.85

Effective Date - 09/01/2016

Step	percent	Apprentice Base Wage	Health	Pension	Supplemental Unemployment	Total Rate
1	50	$22.91	$11.50	$10.05	$0.00	$44.46
2	60	$27.49	$11.50	$10.80	$0.00	$49.79
3	70	$32.07	$11.50	$11.55	$0.00	$55.12
4	80	$36.65	$11.50	$12.30	$0.00	$60.45

Notes:

Steps are 1 year

Apprentice to Journeyworker Ratio:1:4

IRONWORKER/WELDER *IRONWORKERS LOCAL 7 (BOSTON AREA)*	03/16/2016	$43.40	$7.80	$20.85	$0.00	$72.05
	09/16/2016	$44.05	$7.80	$20.85	$0.00	$72.70
	03/16/2017	$44.65	$7.80	$20.85	$0.00	$73.30

Classification	Effective Date	Base Wage	Health	Pension	Supplemental Unemployment	Total Rate

Apprentice - *IRONWORKER - Local 7 Boston*

Effective Date - 03/16/2016

Step	percent	Apprentice Base Wage	Health	Pension	Supplemental Unemployment	Total Rate
1	60	$26.04	$7.80	$20.85	$0.00	$54.69
2	70	$30.38	$7.80	$20.85	$0.00	$59.03
3	75	$32.55	$7.80	$20.85	$0.00	$61.20
4	80	$34.72	$7.80	$20.85	$0.00	$63.37
5	85	$36.89	$7.80	$20.85	$0.00	$65.54
6	90	$39.06	$7.80	$20.85	$0.00	$67.71

Effective Date - 09/16/2016

Step	percent	Apprentice Base Wage	Health	Pension	Supplemental Unemployment	Total Rate
1	60	$26.43	$7.80	$20.85	$0.00	$55.08
2	70	$30.84	$7.80	$20.85	$0.00	$59.49
3	75	$33.04	$7.80	$20.85	$0.00	$61.69
4	80	$35.24	$7.80	$20.85	$0.00	$63.89
5	85	$37.44	$7.80	$20.85	$0.00	$66.09
6	90	$39.65	$7.80	$20.85	$0.00	$68.30

Notes:

** Structural 1:6; Ornamental 1:4

Apprentice to Journeyworker Ratio:**

JACKHAMMER & PAVING BREAKER OPERATOR *LABORERS - ZONE 1*	06/01/2016	$36.35	$7.45	$13.55	$0.00	$57.35
	12/01/2016	$37.35	$7.45	$13.55	$0.00	$58.35
For apprentice rates see "Apprentice- LABORER"						
LABORER *LABORERS - ZONE 1*	06/01/2016	$36.10	$7.45	$13.55	$0.00	$57.10
	12/01/2016	$37.10	$7.45	$13.55	$0.00	$58.10

Classification	Effective Date	Base Wage	Health	Pension	Supplemental Unemployment	Total Rate

Apprentice - *LABORER - Zone 1*

Effective Date - 06/01/2016

Step	percent	Apprentice Base Wage	Health	Pension	Supplemental Unemployment	Total Rate
1	60	$21.66	$7.45	$13.55	$0.00	$42.66
2	70	$25.27	$7.45	$13.55	$0.00	$46.27
3	80	$28.88	$7.45	$13.55	$0.00	$49.88
4	90	$32.49	$7.45	$13.55	$0.00	$53.49

Effective Date - 12/01/2016

Step	percent	Apprentice Base Wage	Health	Pension	Supplemental Unemployment	Total Rate
1	60	$22.26	$7.45	$13.55	$0.00	$43.26
2	70	$25.97	$7.45	$13.55	$0.00	$46.97
3	80	$29.68	$7.45	$13.55	$0.00	$50.68
4	90	$33.39	$7.45	$13.55	$0.00	$54.39

Notes:

Apprentice to Journeyworker Ratio:1:5

LABORER: CARPENTER TENDER *LABORERS - ZONE 1*	06/01/2016	$36.10	$7.45	$13.55	$0.00	$57.10
	12/01/2016	$37.10	$7.45	$13.55	$0.00	$58.10
For apprentice rates see "Apprentice- LABORER"						
LABORER: CEMENT FINISHER TENDER *LABORERS - ZONE 1*	06/01/2016	$36.10	$7.45	$13.55	$0.00	$57.10
	12/01/2016	$37.10	$7.45	$13.55	$0.00	$58.10
For apprentice rates see "Apprentice- LABORER"						
LABORER: HAZARDOUS WASTE/ASBESTOS REMOVER *LABORERS - ZONE 1*	12/01/2015	$35.50	$7.45	$13.55	$0.00	$56.50
For apprentice rates see "Apprentice- LABORER"						
LABORER: MASON TENDER *LABORERS - ZONE 1*	06/01/2016	$36.35	$7.45	$13.55	$0.00	$57.35
	12/01/2016	$37.35	$7.45	$13.55	$0.00	$58.35
For apprentice rates see "Apprentice- LABORER"						
LABORER: MULTI-TRADE TENDER *LABORERS - ZONE 1*	06/01/2016	$36.10	$7.45	$13.55	$0.00	$57.10
	12/01/2016	$37.10	$7.45	$13.55	$0.00	$58.10
For apprentice rates see "Apprentice- LABORER"						
LABORER: TREE REMOVER *LABORERS - ZONE 1*	06/01/2016	$36.10	$7.45	$13.55	$0.00	$57.10
	12/01/2016	$37.10	$7.45	$13.55	$0.00	$58.10
This classification applies to all tree work associated with the removal of standing trees, and trimming and removal of branches and limbs when the work is not done for a utility company for the purpose of operation, maintenance or repair of utility company equipment. For apprentice rates see "Apprentice- LABORER"						
LASER BEAM OPERATOR *LABORERS - ZONE 1*	06/01/2016	$36.35	$7.45	$13.55	$0.00	$57.35
	12/01/2016	$37.35	$7.45	$13.55	$0.00	$58.35
For apprentice rates see "Apprentice- LABORER"						
MARBLE & TILE FINISHERS *BRICKLAYERS LOCAL 3 - MARBLE & TILE*	02/01/2016	$38.08	$10.18	$17.70	$0.00	$65.96
	08/01/2016	$38.78	$10.18	$17.78	$0.00	$66.74
	02/01/2017	$39.24	$10.18	$17.78	$0.00	$67.20

Classification	Effective Date	Base Wage	Health	Pension	Supplemental Unemployment	Total Rate

Apprentice - *MARBLE & TILE FINISHER - Local 3 Marble & Tile*

Effective Date - 02/01/2016

Step	percent	Apprentice Base Wage	Health	Pension	Supplemental Unemployment	Total Rate
1	50	$19.04	$10.18	$17.70	$0.00	$46.92
2	60	$22.85	$10.18	$17.70	$0.00	$50.73
3	70	$26.66	$10.18	$17.70	$0.00	$54.54
4	80	$30.46	$10.18	$17.70	$0.00	$58.34
5	90	$34.27	$10.18	$17.70	$0.00	$62.15

Effective Date - 08/01/2016

Step	percent	Apprentice Base Wage	Health	Pension	Supplemental Unemployment	Total Rate
1	50	$19.39	$10.18	$17.78	$0.00	$47.35
2	60	$23.27	$10.18	$17.78	$0.00	$51.23
3	70	$27.15	$10.18	$17.78	$0.00	$55.11
4	80	$31.02	$10.18	$17.78	$0.00	$58.98
5	90	$34.90	$10.18	$17.78	$0.00	$62.86

Notes:

Apprentice to Journeyworker Ratio:1:3

MARBLE MASONS,TILELAYERS & TERRAZZO MECH *BRICKLAYERS LOCAL 3 - MARBLE & TILE*	02/01/2016	$49.90	$10.18	$19.14	$0.00	$79.22
	08/01/2016	$50.80	$10.18	$19.22	$0.00	$80.20
	02/01/2017	$51.37	$10.18	$19.22	$0.00	$80.77

Classification	Effective Date	Base Wage	Health	Pension	Supplemental Unemployment	Total Rate

Apprentice - *MARBLE-TILE-TERRAZZO MECHANIC - Local 3 Marble & Tile*

Effective Date - 02/01/2016

Step	percent	Apprentice Base Wage	Health	Pension	Supplemental Unemployment	Total Rate
1	50	$24.95	$10.18	$19.14	$0.00	$54.27
2	60	$29.94	$10.18	$19.14	$0.00	$59.26
3	70	$34.93	$10.18	$19.14	$0.00	$64.25
4	80	$39.92	$10.18	$19.14	$0.00	$69.24
5	90	$44.91	$10.18	$19.14	$0.00	$74.23

Effective Date - 08/01/2016

Step	percent	Apprentice Base Wage	Health	Pension	Supplemental Unemployment	Total Rate
1	50	$25.40	$10.18	$19.22	$0.00	$54.80
2	60	$30.48	$10.18	$19.22	$0.00	$59.88
3	70	$35.56	$10.18	$19.22	$0.00	$64.96
4	80	$40.64	$10.18	$19.22	$0.00	$70.04
5	90	$45.72	$10.18	$19.22	$0.00	$75.12

Notes:

Apprentice to Journeyworker Ratio:1:5

MECH. SWEEPER OPERATOR (ON CONST. SITES) *OPERATING ENGINEERS LOCAL 4*	06/01/2016	$43.81	$10.00	$15.15	$0.00	$68.96
	12/01/2016	$45.04	$10.00	$15.15	$0.00	$70.19
	06/01/2017	$46.03	$10.00	$15.15	$0.00	$71.18
	12/01/2017	$47.02	$10.00	$15.15	$0.00	$72.17
For apprentice rates see "Apprentice- OPERATING ENGINEERS"						
MECHANICS MAINTENANCE *OPERATING ENGINEERS LOCAL 4*	06/01/2016	$43.81	$10.00	$15.15	$0.00	$68.96
	12/01/2016	$45.04	$10.00	$15.15	$0.00	$70.19
	06/01/2017	$46.03	$10.00	$15.15	$0.00	$71.18
	12/01/2017	$47.02	$10.00	$15.15	$0.00	$72.17
For apprentice rates see "Apprentice- OPERATING ENGINEERS"						
MILLWRIGHT (Zone 1) *MILLWRIGHTS LOCAL 1121 - Zone 1*	04/01/2015	$37.64	$9.80	$16.21	$0.00	$63.65

Classification	Effective Date	Base Wage	Health	Pension	Supplemental Unemployment	Total Rate

Apprentice - *MILLWRIGHT - Local 1121 Zone 1*

Effective Date - 04/01/2015

Step	percent	Apprentice Base Wage	Health	Pension	Supplemental Unemployment	Total Rate
1	55	$20.70	$9.80	$4.48	$0.00	$34.98
2	65	$24.47	$9.80	$13.36	$0.00	$47.63
3	75	$28.23	$9.80	$14.18	$0.00	$52.21
4	85	$31.99	$9.80	$14.99	$0.00	$56.78

Notes:

Steps are 2,000 hours

Apprentice to Journeyworker Ratio:1:5

MORTAR MIXER *LABORERS - ZONE 1*	06/01/2016	$36.35	$7.45	$13.55	$0.00	$57.35
	12/01/2016	$37.35	$7.45	$13.55	$0.00	$58.35
For apprentice rates see "Apprentice- LABORER"						
OILER (OTHER THAN TRUCK CRANES,GRADALLS) *OPERATING ENGINEERS LOCAL 4*	06/01/2016	$22.41	$10.00	$15.15	$0.00	$47.56
	12/01/2016	$23.06	$10.00	$15.15	$0.00	$48.21
	06/01/2017	$23.57	$10.00	$15.15	$0.00	$48.72
	12/01/2017	$24.09	$10.00	$15.15	$0.00	$49.24
For apprentice rates see "Apprentice- OPERATING ENGINEERS"						
OILER (TRUCK CRANES, GRADALLS) *OPERATING ENGINEERS LOCAL 4*	06/01/2016	$26.29	$10.00	$15.15	$0.00	$51.44
	12/01/2016	$27.04	$10.00	$15.15	$0.00	$52.19
	06/01/2017	$27.64	$10.00	$15.15	$0.00	$52.79
	12/01/2017	$28.25	$10.00	$15.15	$0.00	$53.40
For apprentice rates see "Apprentice- OPERATING ENGINEERS"						
OTHER POWER DRIVEN EQUIPMENT - CLASS II *OPERATING ENGINEERS LOCAL 4*	06/01/2016	$43.81	$10.00	$15.15	$0.00	$68.96
	12/01/2016	$45.04	$10.00	$15.15	$0.00	$70.19
	06/01/2017	$46.03	$10.00	$15.15	$0.00	$71.18
	12/01/2017	$47.02	$10.00	$15.15	$0.00	$72.17
For apprentice rates see "Apprentice- OPERATING ENGINEERS"						
PAINTER (BRIDGES/TANKS) *PAINTERS LOCAL 35 - ZONE 2*	01/01/2016	$49.51	$7.85	$16.10	$0.00	$73.46
	07/01/2016	$50.46	$7.85	$16.10	$0.00	$74.41
	01/01/2017	$51.41	$7.85	$16.10	$0.00	$75.36

Classification	Effective Date	Base Wage	Health	Pension	Supplemental Unemployment	Total Rate

Apprentice - *PAINTER Local 35 - BRIDGES/TANKS*

Effective Date - 01/01/2016

Step	percent	Apprentice Base Wage	Health	Pension	Supplemental Unemployment	Total Rate
1	50	$24.76	$7.85	$0.00	$0.00	$32.61
2	55	$27.23	$7.85	$3.66	$0.00	$38.74
3	60	$29.71	$7.85	$3.99	$0.00	$41.55
4	65	$32.18	$7.85	$4.32	$0.00	$44.35
5	70	$34.66	$7.85	$14.11	$0.00	$56.62
6	75	$37.13	$7.85	$14.44	$0.00	$59.42
7	80	$39.61	$7.85	$14.77	$0.00	$62.23
8	90	$44.56	$7.85	$15.44	$0.00	$67.85

Effective Date - 07/01/2016

Step	percent	Apprentice Base Wage	Health	Pension	Supplemental Unemployment	Total Rate
1	50	$25.23	$7.85	$0.00	$0.00	$33.08
2	55	$27.75	$7.85	$3.66	$0.00	$39.26
3	60	$30.28	$7.85	$3.99	$0.00	$42.12
4	65	$32.80	$7.85	$4.32	$0.00	$44.97
5	70	$35.32	$7.85	$14.11	$0.00	$57.28
6	75	$37.85	$7.85	$14.44	$0.00	$60.14
7	80	$40.37	$7.85	$14.77	$0.00	$62.99
8	90	$45.41	$7.85	$15.44	$0.00	$68.70

Notes:

Steps are 750 hrs.

Apprentice to Journeyworker Ratio:1:1

PAINTER (SPRAY OR SANDBLAST, NEW) *	01/01/2016	$40.41	$7.85	$16.10	$0.00	$64.36
* If 30% or more of surfaces to be painted are new construction, NEW paint rate shall be used.*PAINTERS LOCAL 35 - ZONE 2*	07/01/2016	$41.36	$7.85	$16.10	$0.00	$65.31
	01/01/2017	$42.31	$7.85	$16.10	$0.00	$66.26

Classification	Effective Date	Base Wage	Health	Pension	Supplemental Unemployment	Total Rate

Apprentice - *PAINTER Local 35 Zone 2 - Spray/Sandblast - New*

Effective Date - 01/01/2016

Step	percent	Apprentice Base Wage	Health	Pension	Supplemental Unemployment	Total Rate
1	50	$20.21	$7.85	$0.00	$0.00	$28.06
2	55	$22.23	$7.85	$3.66	$0.00	$33.74
3	60	$24.25	$7.85	$3.99	$0.00	$36.09
4	65	$26.27	$7.85	$4.32	$0.00	$38.44
5	70	$28.29	$7.85	$14.11	$0.00	$50.25
6	75	$30.31	$7.85	$14.44	$0.00	$52.60
7	80	$32.33	$7.85	$14.77	$0.00	$54.95
8	90	$36.37	$7.85	$15.44	$0.00	$59.66

Effective Date - 07/01/2016

Step	percent	Apprentice Base Wage	Health	Pension	Supplemental Unemployment	Total Rate
1	50	$20.68	$7.85	$0.00	$0.00	$28.53
2	55	$22.75	$7.85	$3.66	$0.00	$34.26
3	60	$24.82	$7.85	$3.99	$0.00	$36.66
4	65	$26.88	$7.85	$4.32	$0.00	$39.05
5	70	$28.95	$7.85	$14.11	$0.00	$50.91
6	75	$31.02	$7.85	$14.44	$0.00	$53.31
7	80	$33.09	$7.85	$14.77	$0.00	$55.71
8	90	$37.22	$7.85	$15.44	$0.00	$60.51

Notes:

Steps are 750 hrs.

Apprentice to Journeyworker Ratio:1:1

PAINTER (SPRAY OR SANDBLAST, REPAINT) *PAINTERS LOCAL 35 - ZONE 2*	01/01/2016	$38.47	$7.85	$16.10	$0.00	$62.42
	07/01/2016	$39.42	$7.85	$16.10	$0.00	$63.37
	01/01/2017	$40.37	$7.85	$16.10	$0.00	$64.32

Classification	Effective Date	Base Wage	Health	Pension	Supplemental Unemployment	Total Rate

Apprentice - *PAINTER Local 35 Zone 2 - Spray/Sandblast - Repaint*

Effective Date - 01/01/2016

Step	percent	Apprentice Base Wage	Health	Pension	Supplemental Unemployment	Total Rate
1	50	$19.24	$7.85	$0.00	$0.00	$27.09
2	55	$21.16	$7.85	$3.66	$0.00	$32.67
3	60	$23.08	$7.85	$3.99	$0.00	$34.92
4	65	$25.01	$7.85	$4.32	$0.00	$37.18
5	70	$26.93	$7.85	$14.11	$0.00	$48.89
6	75	$28.85	$7.85	$14.44	$0.00	$51.14
7	80	$30.78	$7.85	$14.77	$0.00	$53.40
8	90	$34.62	$7.85	$15.44	$0.00	$57.91

Effective Date - 07/01/2016

Step	percent	Apprentice Base Wage	Health	Pension	Supplemental Unemployment	Total Rate
1	50	$19.71	$7.85	$0.00	$0.00	$27.56
2	55	$21.68	$7.85	$3.66	$0.00	$33.19
3	60	$23.65	$7.85	$3.99	$0.00	$35.49
4	65	$25.62	$7.85	$4.32	$0.00	$37.79
5	70	$27.59	$7.85	$14.11	$0.00	$49.55
6	75	$29.57	$7.85	$14.44	$0.00	$51.86
7	80	$31.54	$7.85	$14.77	$0.00	$54.16
8	90	$35.48	$7.85	$15.44	$0.00	$58.77

Notes:

Steps are 750 hrs.

Apprentice to Journeyworker Ratio:1:1

PAINTER (TRAFFIC MARKINGS) *LABORERS - ZONE 1* For Apprentice rates see "Apprentice- LABORER"	06/01/2016	$36.10	$7.45	$13.55	$0.00	$57.10
	12/01/2016	$37.10	$7.45	$13.55	$0.00	$58.10
PAINTER / TAPER (BRUSH, NEW) * * If 30% or more of surfaces to be painted are new construction, NEW paint rate shall be used.*PAINTERS LOCAL 35 - ZONE 2*	01/01/2016	$39.01	$7.85	$16.10	$0.00	$62.96
	07/01/2016	$39.96	$7.85	$16.10	$0.00	$63.91
	01/01/2017	$40.91	$7.85	$16.10	$0.00	$64.86

Classification	Effective Date	Base Wage	Health	Pension	Supplemental Unemployment	Total Rate

Apprentice - *PAINTER - Local 35 Zone 2 - BRUSH NEW*

Effective Date - 01/01/2016

Step	percent	Apprentice Base Wage	Health	Pension	Supplemental Unemployment	Total Rate
1	50	$19.51	$7.85	$0.00	$0.00	$27.36
2	55	$21.46	$7.85	$3.66	$0.00	$32.97
3	60	$23.41	$7.85	$3.99	$0.00	$35.25
4	65	$25.36	$7.85	$4.32	$0.00	$37.53
5	70	$27.31	$7.85	$14.11	$0.00	$49.27
6	75	$29.26	$7.85	$14.44	$0.00	$51.55
7	80	$31.21	$7.85	$14.77	$0.00	$53.83
8	90	$35.11	$7.85	$15.44	$0.00	$58.40

Effective Date - 07/01/2016

Step	percent	Apprentice Base Wage	Health	Pension	Supplemental Unemployment	Total Rate
1	50	$19.98	$7.85	$0.00	$0.00	$27.83
2	55	$21.98	$7.85	$3.66	$0.00	$33.49
3	60	$23.98	$7.85	$3.99	$0.00	$35.82
4	65	$25.97	$7.85	$4.32	$0.00	$38.14
5	70	$27.97	$7.85	$14.11	$0.00	$49.93
6	75	$29.97	$7.85	$14.44	$0.00	$52.26
7	80	$31.97	$7.85	$14.77	$0.00	$54.59
8	90	$35.96	$7.85	$15.44	$0.00	$59.25

Notes:

Steps are 750 hrs.

Apprentice to Journeyworker Ratio:1:1

PAINTER / TAPER (BRUSH, REPAINT) *PAINTERS LOCAL 35 - ZONE 2*	01/01/2016	$37.07	$7.85	$16.10	$0.00	$61.02
	07/01/2016	$38.02	$7.85	$16.10	$0.00	$61.97
	01/01/2017	$38.97	$7.85	$16.10	$0.00	$62.92

Classification	Effective Date	Base Wage	Health	Pension	Supplemental Unemployment	Total Rate

Apprentice - *PAINTER Local 35 Zone 2 - BRUSH REPAINT*

Effective Date - 01/01/2016

Step	percent	Apprentice Base Wage	Health	Pension	Supplemental Unemployment	Total Rate
1	50	$18.54	$7.85	$0.00	$0.00	$26.39
2	55	$20.39	$7.85	$3.66	$0.00	$31.90
3	60	$22.24	$7.85	$3.99	$0.00	$34.08
4	65	$24.10	$7.85	$4.32	$0.00	$36.27
5	70	$25.95	$7.85	$14.11	$0.00	$47.91
6	75	$27.80	$7.85	$14.44	$0.00	$50.09
7	80	$29.66	$7.85	$14.77	$0.00	$52.28
8	90	$33.36	$7.85	$15.44	$0.00	$56.65

Effective Date - 07/01/2016

Step	percent	Apprentice Base Wage	Health	Pension	Supplemental Unemployment	Total Rate
1	50	$19.01	$7.85	$0.00	$0.00	$26.86
2	55	$20.91	$7.85	$3.66	$0.00	$32.42
3	60	$22.81	$7.85	$3.99	$0.00	$34.65
4	65	$24.71	$7.85	$4.32	$0.00	$36.88
5	70	$26.61	$7.85	$14.11	$0.00	$48.57
6	75	$28.52	$7.85	$14.44	$0.00	$50.81
7	80	$30.42	$7.85	$14.77	$0.00	$53.04
8	90	$34.22	$7.85	$15.44	$0.00	$57.51

Notes:

Steps are 750 hrs.

Apprentice to Journeyworker Ratio:1:1

PANEL & PICKUP TRUCKS DRIVER *TEAMSTERS JOINT COUNCIL NO. 10 ZONE A*	06/01/2016	$33.08	$10.41	$10.08	$0.00	$53.57
	08/01/2016	$33.08	$10.91	$10.08	$0.00	$54.07
	12/01/2016	$33.08	$10.91	$10.89	$0.00	$54.88
PIER AND DOCK CONSTRUCTOR (UNDERPINNING AND DECK) *PILE DRIVER LOCAL 56 (ZONE 1)* For apprentice rates see "Apprentice- PILE DRIVER"	08/01/2015	$42.04	$9.80	$19.23	$0.00	$71.07
PILE DRIVER *PILE DRIVER LOCAL 56 (ZONE 1)*	08/01/2015	$42.04	$9.80	$19.23	$0.00	$71.07

Classification	Effective Date	Base Wage	Health	Pension	Supplemental Unemployment	Total Rate

Apprentice - *PILE DRIVER - Local 56 Zone 1*

Effective Date - 08/01/2015

Step	percent	Apprentice Base Wage	Health	Pension	Supplemental Unemployment	Total Rate
1	50	$21.02	$9.80	$19.23	$0.00	$50.05
2	60	$25.22	$9.80	$19.23	$0.00	$54.25
3	70	$29.43	$9.80	$19.23	$0.00	$58.46
4	75	$31.53	$9.80	$19.23	$0.00	$60.56
5	80	$33.63	$9.80	$19.23	$0.00	$62.66
6	80	$33.63	$9.80	$19.23	$0.00	$62.66
7	90	$37.84	$9.80	$19.23	$0.00	$66.87
8	90	$37.84	$9.80	$19.23	$0.00	$66.87

Notes:

Apprentice to Journeyworker Ratio:1:3

PIPEFITTER & STEAMFITTER *PIPEFITTERS LOCAL 537*	03/01/2016	$49.19	$9.70	$18.14	$0.00	$77.03
	09/01/2016	$50.19	$9.70	$18.14	$0.00	$78.03
	03/01/2017	$51.19	$9.70	$18.14	$0.00	$79.03

Apprentice - *PIPEFITTER - Local 537*

Effective Date - 03/01/2016

Step	percent	Apprentice Base Wage	Health	Pension	Supplemental Unemployment	Total Rate
1	40	$19.68	$9.70	$7.50	$0.00	$36.88
2	45	$22.14	$9.70	$18.14	$0.00	$49.98
3	60	$29.51	$9.70	$18.14	$0.00	$57.35
4	70	$34.43	$9.70	$18.14	$0.00	$62.27
5	80	$39.35	$9.70	$18.14	$0.00	$67.19

Effective Date - 09/01/2016

Step	percent	Apprentice Base Wage	Health	Pension	Supplemental Unemployment	Total Rate
1	40	$20.08	$9.70	$7.50	$0.00	$37.28
2	45	$22.59	$9.70	$18.14	$0.00	$50.43
3	60	$30.11	$9.70	$18.14	$0.00	$57.95
4	70	$35.13	$9.70	$18.14	$0.00	$62.97
5	80	$40.15	$9.70	$18.14	$0.00	$67.99

Notes:

** 1:3; 3:15; 1:10 thereafter / Steps are 1 yr.
Refrig/AC Mechanic **1:1;1:2;2:4;3:6;4:8;5:10;6:12;7:14;8:17;9:20;10:23(Max)

Apprentice to Journeyworker Ratio:**

PIPELAYER *LABORERS - ZONE 1*	06/01/2016	$36.35	$7.45	$13.55	$0.00	$57.35
	12/01/2016	$37.35	$7.45	$13.55	$0.00	$58.35

For apprentice rates see "Apprentice- LABORER"

Classification	Effective Date	Base Wage	Health	Pension	Supplemental Unemployment	Total Rate
PLUMBERS & GASFITTERS *PLUMBERS & GASFITTERS LOCAL 12*	03/01/2016	$51.36	$11.07	$15.14	$0.00	$77.57
	09/01/2016	$52.41	$11.07	$15.14	$0.00	$78.62
	03/01/2017	$53.41	$11.07	$15.14	$0.00	$79.62

Apprentice - *PLUMBER/GASFITTER - Local 12*

Effective Date - 03/01/2016

Step	percent	Apprentice Base Wage	Health	Pension	Supplemental Unemployment	Total Rate
1	35	$17.98	$11.07	$5.63	$0.00	$34.68
2	40	$20.54	$11.07	$6.37	$0.00	$37.98
3	55	$28.25	$11.07	$8.56	$0.00	$47.88
4	65	$33.38	$11.07	$10.03	$0.00	$54.48
5	75	$38.52	$11.07	$11.48	$0.00	$61.07

Effective Date - 09/01/2016

Step	percent	Apprentice Base Wage	Health	Pension	Supplemental Unemployment	Total Rate
1	35	$18.34	$11.07	$5.63	$0.00	$35.04
2	40	$20.96	$11.07	$6.36	$0.00	$38.39
3	55	$28.83	$11.07	$8.55	$0.00	$48.45
4	65	$34.07	$11.07	$10.02	$0.00	$55.16
5	75	$39.31	$11.07	$11.48	$0.00	$61.86

Notes:

** 1:2; 2:6; 3:10; 4:14; 5:19/Steps are 1 yr
Step4 with lic$57.78 Step5 with lic$64.37

Apprentice to Journeyworker Ratio:**

PNEUMATIC CONTROLS (TEMP.) *PIPEFITTERS LOCAL 537*	03/01/2016	$49.19	$9.70	$18.14	$0.00	$77.03
	09/01/2016	$50.19	$9.70	$18.14	$0.00	$78.03
	03/01/2017	$51.19	$9.70	$18.14	$0.00	$79.03
For apprentice rates see "Apprentice- PIPEFITTER" or "PLUMBER/PIPEFITTER"						
PNEUMATIC DRILL/TOOL OPERATOR *LABORERS - ZONE 1*	06/01/2016	$36.35	$7.45	$13.55	$0.00	$57.35
	12/01/2016	$37.35	$7.45	$13.55	$0.00	$58.35
For apprentice rates see "Apprentice- LABORER"						
POWDERMAN & BLASTER *LABORERS - ZONE 1*	06/01/2016	$37.10	$7.45	$13.55	$0.00	$58.10
	12/01/2016	$38.10	$7.45	$13.55	$0.00	$59.10
For apprentice rates see "Apprentice- LABORER"						
POWER SHOVEL/DERRICK/TRENCHING MACHINE *OPERATING ENGINEERS LOCAL 4*	06/01/2016	$44.23	$10.00	$15.15	$0.00	$69.38
	12/01/2016	$45.48	$10.00	$15.15	$0.00	$70.63
	06/01/2017	$46.48	$10.00	$15.15	$0.00	$71.63
	12/01/2017	$47.48	$10.00	$15.15	$0.00	$72.63
For apprentice rates see "Apprentice- OPERATING ENGINEERS"						
PUMP OPERATOR (CONCRETE) *OPERATING ENGINEERS LOCAL 4*	06/01/2016	$44.23	$10.00	$15.15	$0.00	$69.38
	12/01/2016	$45.48	$10.00	$15.15	$0.00	$70.63
	06/01/2017	$46.48	$10.00	$15.15	$0.00	$71.63
	12/01/2017	$47.48	$10.00	$15.15	$0.00	$72.63
For apprentice rates see "Apprentice- OPERATING ENGINEERS"						

Classification	Effective Date	Base Wage	Health	Pension	Supplemental Unemployment	Total Rate
PUMP OPERATOR (DEWATERING, OTHER) *OPERATING ENGINEERS LOCAL 4*	06/01/2016	$30.40	$10.00	$15.15	$0.00	$55.55
	12/01/2016	$31.27	$10.00	$15.15	$0.00	$56.42
	06/01/2017	$31.96	$10.00	$15.15	$0.00	$57.11
	12/01/2017	$32.65	$10.00	$15.15	$0.00	$57.80
For apprentice rates see "Apprentice- OPERATING ENGINEERS"						
READY MIX CONCRETE DRIVERS after 4/30/10 (Drivers Hired After 4/30/2010) *TEAMSTERS LOCAL 25b*	05/01/2016	$28.03	$7.98	$9.31	$0.00	$45.32
	07/01/2016	$28.03	$8.23	$9.31	$0.00	$45.57
	05/01/2017	$28.18	$8.23	$9.72	$0.00	$46.13
	07/01/2017	$28.18	$8.48	$9.72	$0.00	$46.38
READY-MIX CONCRETE DRIVER *TEAMSTERS LOCAL 25b*	05/01/2016	$29.33	$7.98	$9.31	$0.00	$46.62
	07/01/2016	$29.33	$8.23	$9.31	$0.00	$46.87
	05/01/2017	$29.48	$8.23	$9.72	$0.00	$47.43
	07/01/2017	$29.48	$8.48	$9.72	$0.00	$47.68
RECLAIMERS *OPERATING ENGINEERS LOCAL 4*	06/01/2016	$43.81	$10.00	$15.15	$0.00	$68.96
	12/01/2016	$45.04	$10.00	$15.15	$0.00	$70.19
	06/01/2017	$46.03	$10.00	$15.15	$0.00	$71.18
	12/01/2017	$47.02	$10.00	$15.15	$0.00	$72.17
For apprentice rates see "Apprentice- OPERATING ENGINEERS"						
RESIDENTIAL WOOD FRAME (All Other Work) *CARPENTERS -ZONE 2 (Residential Wood)*	04/01/2011	$24.24	$8.67	$15.51	$0.00	$48.42
RESIDENTIAL WOOD FRAME CARPENTER ** ** The Residential Wood Frame Carpenter classification applies only to the construction of new, wood frame residences that do not exceed four stories including the basement. *CARPENTERS -ZONE 2 (Residential Wood)*	05/01/2011	$24.24	$6.34	$6.23	$0.00	$36.81

As of 9/1/09 Carpentry work on wood-frame residential WEATHERIZATION projects shall be paid the RESIDENTIAL WOOD FRAME CARPENTER rate.

Apprentice - *CARPENTER (Residential Wood Frame) - Zone 2*

Effective Date - 05/01/2011

Step	percent	Apprentice Base Wage	Health	Pension	Supplemental Unemployment	Total Rate
1	60	$14.54	$6.34	$0.00	$0.00	$20.88
2	60	$14.54	$6.34	$6.23	$0.00	$27.11
3	65	$15.76	$6.34	$6.23	$0.00	$28.33
4	70	$16.97	$6.34	$6.23	$0.00	$29.54
5	75	$18.18	$6.34	$6.23	$0.00	$30.75
6	80	$19.39	$6.34	$6.23	$0.00	$31.96
7	85	$20.60	$6.34	$6.23	$0.00	$33.17
8	90	$21.82	$6.34	$6.23	$0.00	$34.39

Notes:

Apprentice to Journeyworker Ratio:1:5

RIDE-ON MOTORIZED BUGGY OPERATOR *LABORERS - ZONE 1*	06/01/2016	$36.35	$7.45	$13.55	$0.00	$57.35
	12/01/2016	$37.35	$7.45	$13.55	$0.00	$58.35
For apprentice rates see "Apprentice- LABORER"						

Classification	Effective Date	Base Wage	Health	Pension	Supplemental Unemployment	Total Rate
ROLLER/SPREADER/MULCHING MACHINE *OPERATING ENGINEERS LOCAL 4*	06/01/2016	$43.81	$10.00	$15.15	$0.00	$68.96
	12/01/2016	$45.04	$10.00	$15.15	$0.00	$70.19
	06/01/2017	$46.03	$10.00	$15.15	$0.00	$71.18
	12/01/2017	$47.02	$10.00	$15.15	$0.00	$72.17
For apprentice rates see "Apprentice- OPERATING ENGINEERS"						
ROOFER (Inc.Roofer Waterproofng &Roofer Damproofg) *ROOFERS LOCAL 33*	02/01/2016	$40.11	$11.00	$12.90	$0.00	$64.01

Apprentice - *ROOFER - Local 33*

Effective Date - 02/01/2016

Step	percent	Apprentice Base Wage	Health	Pension	Supplemental Unemployment	Total Rate
1	50	$20.06	$11.00	$3.39	$0.00	$34.45
2	60	$24.07	$11.00	$12.90	$0.00	$47.97
3	65	$26.07	$11.00	$12.90	$0.00	$49.97
4	75	$30.08	$11.00	$12.90	$0.00	$53.98
5	85	$34.09	$11.00	$12.90	$0.00	$57.99

Notes: ** 1:5, 2:6-10, the 1:10; Reroofing: 1:4, then 1:1
Step 1 is 2000 hrs.; Steps 2-5 are 1000 hrs.

Apprentice to Journeyworker Ratio:**

ROOFER SLATE / TILE / PRECAST CONCRETE *ROOFERS LOCAL 33*	02/01/2016	$40.36	$11.00	$12.90	$0.00	$64.26
For apprentice rates see "Apprentice- ROOFER"						
SHEETMETAL WORKER *SHEETMETAL WORKERS LOCAL 17 - A*	02/01/2016	$43.31	$10.70	$21.95	$2.28	$78.24
	08/01/2016	$44.46	$10.70	$21.95	$2.28	$79.39
	02/01/2017	$45.56	$10.70	$21.95	$2.28	$80.49
	08/01/2017	$46.66	$10.70	$21.95	$2.28	$81.59
	02/01/2018	$47.81	$10.70	$21.95	$2.28	$82.74

Classification	Effective Date	Base Wage	Health	Pension	Supplemental Unemployment	Total Rate

Apprentice - *SHEET METAL WORKER - Local 17-A*

Effective Date - 02/01/2016

Step	percent	Apprentice Base Wage	Health	Pension	Supplemental Unemployment	Total Rate
1	40	$17.32	$10.70	$4.90	$0.00	$32.92
2	40	$17.32	$10.70	$4.90	$0.00	$32.92
3	45	$19.49	$10.70	$9.79	$1.20	$41.18
4	45	$19.49	$10.70	$9.79	$1.20	$41.18
5	50	$21.66	$10.70	$10.65	$1.29	$44.30
6	50	$21.66	$10.70	$10.90	$1.30	$44.56
7	60	$25.99	$10.70	$12.37	$1.47	$50.53
8	65	$28.15	$10.70	$13.24	$1.56	$53.65
9	75	$32.48	$10.70	$14.97	$1.74	$59.89
10	85	$36.81	$10.70	$16.18	$1.91	$65.60

Effective Date - 08/01/2016

Step	percent	Apprentice Base Wage	Health	Pension	Supplemental Unemployment	Total Rate
1	40	$17.78	$10.70	$4.90	$0.00	$33.38
2	40	$17.78	$10.70	$4.90	$0.00	$33.38
3	45	$20.01	$10.70	$9.79	$1.22	$41.72
4	45	$20.01	$10.70	$9.79	$1.22	$41.72
5	50	$22.23	$10.70	$10.65	$1.31	$44.89
6	50	$22.23	$10.70	$10.90	$1.31	$45.14
7	60	$26.68	$10.70	$12.37	$1.49	$51.24
8	65	$28.90	$10.70	$13.24	$1.59	$54.43
9	75	$33.35	$10.70	$14.97	$1.77	$60.79
10	85	$37.79	$10.70	$16.18	$1.94	$66.61

Notes:

Steps are 6 mos.

Apprentice to Journeyworker Ratio:1:4

SIGN ERECTOR *PAINTERS LOCAL 35 - ZONE 2*	06/01/2013	$25.81	$7.07	$7.05	$0.00	$39.93

Classification	Effective Date	Base Wage	Health	Pension	Supplemental Unemployment	Total Rate

Apprentice - *SIGN ERECTOR - Local 35 Zone 2*

Effective Date - 06/01/2013

Step	percent	Apprentice Base Wage	Health	Pension	Supplemental Unemployment	Total Rate
1	50	$12.91	$7.07	$0.00	$0.00	$19.98
2	55	$14.20	$7.07	$2.45	$0.00	$23.72
3	60	$15.49	$7.07	$2.45	$0.00	$25.01
4	65	$16.78	$7.07	$2.45	$0.00	$26.30
5	70	$18.07	$7.07	$7.05	$0.00	$32.19
6	75	$19.36	$7.07	$7.05	$0.00	$33.48
7	80	$20.65	$7.07	$7.05	$0.00	$34.77
8	85	$21.94	$7.07	$7.05	$0.00	$36.06
9	90	$23.23	$7.07	$7.05	$0.00	$37.35

Notes:

Steps are 4 mos.

Apprentice to Journeyworker Ratio:1:1

SPECIALIZED EARTH MOVING EQUIP < 35 TONS *TEAMSTERS JOINT COUNCIL NO. 10 ZONE A*	06/01/2016	$33.54	$10.41	$10.08	$0.00	$54.03
	08/01/2016	$33.54	$10.91	$10.08	$0.00	$54.53
	12/01/2016	$33.54	$10.91	$10.89	$0.00	$55.34
SPECIALIZED EARTH MOVING EQUIP > 35 TONS *TEAMSTERS JOINT COUNCIL NO. 10 ZONE A*	06/01/2016	$33.83	$10.41	$10.08	$0.00	$54.32
	08/01/2016	$33.83	$10.91	$10.08	$0.00	$54.82
	12/01/2016	$33.83	$10.91	$10.89	$0.00	$55.63
SPRINKLER FITTER *SPRINKLER FITTERS LOCAL 550 - (Section A) Zone 1*	03/01/2016	$54.43	$8.67	$16.80	$0.00	$79.90
	10/01/2016	$55.53	$8.67	$16.80	$0.00	$81.00
	03/01/2017	$56.53	$8.67	$16.80	$0.00	$82.00

Classification	Effective Date	Base Wage	Health	Pension	Supplemental Unemployment	Total Rate

Apprentice - *SPRINKLER FITTER - Local 550 (Section A) Zone 1*

Effective Date - 03/01/2016

Step	percent	Apprentice Base Wage	Health	Pension	Supplemental Unemployment	Total Rate
1	35	$19.05	$8.67	$8.55	$0.00	$36.27
2	40	$21.77	$8.67	$8.55	$0.00	$38.99
3	45	$24.49	$8.67	$8.55	$0.00	$41.71
4	50	$27.22	$8.67	$8.55	$0.00	$44.44
5	55	$29.94	$8.67	$8.55	$0.00	$47.16
6	60	$32.66	$8.67	$8.55	$0.00	$49.88
7	65	$35.38	$8.67	$8.55	$0.00	$52.60
8	70	$38.10	$8.67	$8.55	$0.00	$55.32
9	75	$40.82	$8.67	$8.55	$0.00	$58.04
10	80	$43.54	$8.67	$8.55	$0.00	$60.76

Effective Date - 10/01/2016

Step	percent	Apprentice Base Wage	Health	Pension	Supplemental Unemployment	Total Rate
1	35	$19.44	$8.67	$8.55	$0.00	$36.66
2	40	$22.21	$8.67	$8.55	$0.00	$39.43
3	45	$24.99	$8.67	$8.55	$0.00	$42.21
4	50	$27.77	$8.67	$8.55	$0.00	$44.99
5	55	$30.54	$8.67	$8.55	$0.00	$47.76
6	60	$33.32	$8.67	$8.55	$0.00	$50.54
7	65	$36.09	$8.67	$8.55	$0.00	$53.31
8	70	$38.87	$8.67	$8.55	$0.00	$56.09
9	75	$41.65	$8.67	$8.55	$0.00	$58.87
10	80	$44.42	$8.67	$8.55	$0.00	$61.64

Notes: Apprentice entered prior 9/30/10:
40/45/50/55/60/65/70/75/80/85
Steps are 850 hours

Apprentice to Journeyworker Ratio:1:3

STEAM BOILER OPERATOR *OPERATING ENGINEERS LOCAL 4*	06/01/2016	$43.81	$10.00	$15.15	$0.00	$68.96
	12/01/2016	$45.04	$10.00	$15.15	$0.00	$70.19
	06/01/2017	$46.03	$10.00	$15.15	$0.00	$71.18
	12/01/2017	$47.02	$10.00	$15.15	$0.00	$72.17
For apprentice rates see "Apprentice- OPERATING ENGINEERS"						
TAMPERS, SELF-PROPELLED OR TRACTOR DRAWN *OPERATING ENGINEERS LOCAL 4*	06/01/2016	$43.81	$10.00	$15.15	$0.00	$68.96
	12/01/2016	$45.04	$10.00	$15.15	$0.00	$70.19
	06/01/2017	$46.03	$10.00	$15.15	$0.00	$71.18
	12/01/2017	$47.02	$10.00	$15.15	$0.00	$72.17
For apprentice rates see "Apprentice- OPERATING ENGINEERS"						
TELECOMMUNICATION TECHNICIAN *ELECTRICIANS LOCAL 103*	03/01/2016	$34.63	$13.00	$14.55	$0.00	$62.18

Classification	Effective Date	Base Wage	Health	Pension	Supplemental Unemployment	Total Rate

Apprentice - *TELECOMMUNICATION TECHNICIAN - Local 103*

Effective Date - 03/01/2016

Step	percent	Apprentice Base Wage	Health	Pension	Supplemental Unemployment	Total Rate
1	40	$13.85	$13.00	$0.42	$0.00	$27.27
2	40	$13.85	$13.00	$0.42	$0.00	$27.27
3	45	$15.58	$13.00	$11.52	$0.00	$40.10
4	45	$15.58	$13.00	$11.52	$0.00	$40.10
5	50	$17.32	$13.00	$11.79	$0.00	$42.11
6	55	$19.05	$13.00	$12.06	$0.00	$44.11
7	60	$20.78	$13.00	$12.34	$0.00	$46.12
8	65	$22.51	$13.00	$12.62	$0.00	$48.13
9	70	$24.24	$13.00	$12.90	$0.00	$50.14
10	75	$25.97	$13.00	$13.17	$0.00	$52.14

Notes:

Apprentice to Journeyworker Ratio:1:1

TERRAZZO FINISHERS *BRICKLAYERS LOCAL 3 - MARBLE & TILE*	02/01/2016	$48.80	$10.18	$19.14	$0.00	$78.12
	08/01/2016	$49.70	$10.18	$19.22	$0.00	$79.10
	02/01/2017	$50.27	$10.18	$19.22	$0.00	$79.67

Apprentice - *TERRAZZO FINISHER - Local 3 Marble & Tile*

Effective Date - 02/01/2016

Step	percent	Apprentice Base Wage	Health	Pension	Supplemental Unemployment	Total Rate
1	50	$24.40	$10.18	$19.14	$0.00	$53.72
2	60	$29.28	$10.18	$19.14	$0.00	$58.60
3	70	$34.16	$10.18	$19.14	$0.00	$63.48
4	80	$39.04	$10.18	$19.14	$0.00	$68.36
5	90	$43.92	$10.18	$19.14	$0.00	$73.24

Effective Date - 08/01/2016

Step	percent	Apprentice Base Wage	Health	Pension	Supplemental Unemployment	Total Rate
1	50	$24.85	$10.18	$19.22	$0.00	$54.25
2	60	$29.82	$10.18	$19.22	$0.00	$59.22
3	70	$34.79	$10.18	$19.22	$0.00	$64.19
4	80	$39.76	$10.18	$19.22	$0.00	$69.16
5	90	$44.73	$10.18	$19.22	$0.00	$74.13

Notes:

Apprentice to Journeyworker Ratio:1:3

Classification	Effective Date	Base Wage	Health	Pension	Supplemental Unemployment	Total Rate
TEST BORING DRILLER *LABORERS - FOUNDATION AND MARINE*	06/01/2016	$37.45	$7.45	$13.75	$0.00	$58.65
	12/01/2016	$38.45	$7.45	$13.75	$0.00	$59.65
For apprentice rates see "Apprentice- LABORER"						
TEST BORING DRILLER HELPER *LABORERS - FOUNDATION AND MARINE*	06/01/2016	$36.17	$7.45	$13.75	$0.00	$57.37
	12/01/2016	$37.17	$7.45	$13.75	$0.00	$58.37
For apprentice rates see "Apprentice- LABORER"						
TEST BORING LABORER *LABORERS - FOUNDATION AND MARINE*	06/01/2016	$36.05	$7.45	$13.75	$0.00	$57.25
	12/01/2016	$37.05	$7.45	$13.75	$0.00	$58.25
For apprentice rates see "Apprentice- LABORER"						
TRACTORS/PORTABLE STEAM GENERATORS *OPERATING ENGINEERS LOCAL 4*	06/01/2016	$43.81	$10.00	$15.15	$0.00	$68.96
	12/01/2016	$45.04	$10.00	$15.15	$0.00	$70.19
	06/01/2017	$46.03	$10.00	$15.15	$0.00	$71.18
	12/01/2017	$47.02	$10.00	$15.15	$0.00	$72.17
For apprentice rates see "Apprentice- OPERATING ENGINEERS"						
TRAILERS FOR EARTH MOVING EQUIPMENT *TEAMSTERS JOINT COUNCIL NO. 10 ZONE A*	06/01/2016	$34.12	$10.41	$10.08	$0.00	$54.61
	08/01/2016	$34.12	$10.91	$10.08	$0.00	$55.11
	12/01/2016	$34.12	$10.91	$10.89	$0.00	$55.92
TUNNEL WORK - COMPRESSED AIR *LABORERS (COMPRESSED AIR)*	06/01/2016	$48.33	$7.45	$14.15	$0.00	$69.93
	12/01/2016	$49.33	$7.45	$14.15	$0.00	$70.93
For apprentice rates see "Apprentice- LABORER"						
TUNNEL WORK - COMPRESSED AIR (HAZ. WASTE) *LABORERS (COMPRESSED AIR)*	06/01/2016	$50.33	$7.45	$14.15	$0.00	$71.93
	12/01/2016	$51.33	$7.45	$14.15	$0.00	$72.93
For apprentice rates see "Apprentice- LABORER"						
TUNNEL WORK - FREE AIR *LABORERS (FREE AIR TUNNEL)*	06/01/2016	$40.40	$7.45	$14.15	$0.00	$62.00
	12/01/2016	$41.40	$7.45	$14.15	$0.00	$63.00
For apprentice rates see "Apprentice- LABORER"						
TUNNEL WORK - FREE AIR (HAZ. WASTE) *LABORERS (FREE AIR TUNNEL)*	06/01/2016	$42.40	$7.45	$14.15	$0.00	$64.00
	12/01/2016	$43.40	$7.45	$14.15	$0.00	$65.00
For apprentice rates see "Apprentice- LABORER"						
VAC-HAUL *TEAMSTERS JOINT COUNCIL NO. 10 ZONE A*	06/01/2016	$33.54	$10.41	$10.08	$0.00	$54.03
	08/01/2016	$33.54	$10.91	$10.08	$0.00	$54.53
	12/01/2016	$33.54	$10.91	$10.89	$0.00	$55.34
WAGON DRILL OPERATOR *LABORERS - ZONE 1*	06/01/2016	$36.35	$7.45	$13.55	$0.00	$57.35
	12/01/2016	$37.35	$7.45	$13.55	$0.00	$58.35
For apprentice rates see "Apprentice- LABORER"						
WASTE WATER PUMP OPERATOR *OPERATING ENGINEERS LOCAL 4*	06/01/2016	$44.23	$10.00	$15.15	$0.00	$69.38
	12/01/2016	$45.48	$10.00	$15.15	$0.00	$70.63
	06/01/2017	$46.48	$10.00	$15.15	$0.00	$71.63
	12/01/2017	$47.48	$10.00	$15.15	$0.00	$72.63
For apprentice rates see "Apprentice- OPERATING ENGINEERS"						
WATER METER INSTALLER *PLUMBERS & GASFITTERS LOCAL 12*	03/01/2016	$51.36	$11.07	$15.14	$0.00	$77.57
	09/01/2016	$52.41	$11.07	$15.14	$0.00	$78.62
	03/01/2017	$53.41	$11.07	$15.14	$0.00	$79.62
For apprentice rates see "Apprentice- PLUMBER/PIPEFITTER" or "PLUMBER/GASFITTER"						

Classification	Effective Date	Base Wage	Health	Pension	Supplemental Unemployment	Total Rate

Additional Apprentice Information:

Minimum wage rates for apprentices employed on public works projects are listed above as a percentage of the pre-determined hourly wage rate established by the Commissioner under the provisions of the M.G.L. c. 149, ss. 26-27D. Apprentice ratios are established by the Division of Apprenticeship Training pursuant to M.G.L. c. 23, ss. 11E-11L.

All apprentices must be registered with the Division of Apprenticeship Training in accordance with M.G.L. c. 23, ss. 11E-11L.

All steps are six months (1000 hours.)
Ratios are expressed in allowable number of apprentices to journeymen or fraction thereof, unless otherwise specified.

** Multiple ratios are listed in the comment field.
*** APP to JM; 1:1, 2:2, 2:3, 3:4, 4:4, 4:5, 4:6, 5:7, 6:7, 6:8, 6:9, 7:10, 8:10, 8:11, 8:12, 9:13, 10:13, 10:14, etc.
**** APP to JM; 1:1, 1:2, 2:3, 2:4, 3:5, 4:6, 4:7, 5:8, 6:9, 6:10, 7:11, 8:12, 8:13, 9:14, 10:15, 10:16, etc.

APPENDIX B:

SAMPLE RESIDENT NOTICE

Department of Public Works
55 Sea Street, Quincy, MA 02169

Daniel Raymondi, Commissioner
Phone: 617-379-1959

CONSTRUCTION NOTICE:

TO: **Area Residents/Businesses**

FROM: **Daniel G. Raymondi, Commissioner of Public Works**

RE: **[PROJECT NAME]**

DATE: **[DATE}**

The City's annual water main improvements project has been awarded to [CONTRACTOR'S NAME]. The water main in your street will be replaced and construction is scheduled to commence on or about

[DATE]

Work under this contract will include connection of a temporary water supply line to your house, excavation of the existing water main, installation of new ductile iron water main, installation of a new water service connection, backfilling the excavated trench, and trench paving.

While construction is in progress in your street, we are requesting that residents do not park their cars on the street between the hours of 7:00 am and 5:00 pm, Monday through Friday.

Hours of construction will be _____to_____, Monday through Friday. If you have questions regarding the construction, please feel free to contact Mr. Jeffrey Vradenburg, Water Main Coordinator, at the Department of Public Works @ 617-376-1950 or [Contractor's Superintendent & Phone number].

Please note there will be occasions when your water service will be interrupted. In this event, you will be notified at least 24 hours in advance of planned water shut-offs. It may be necessary to close sections of the road that are under construction but these areas will be opened up to normal traffic patterns at the end of each day. Signs will be posted and police details will be on site during construction. There will be no interruption of Postal and Trash services.

We apologize in advance for any inconvenience this much needed work may cause and assure you that we will work to expedite this work as effectively as possible. Thank you in advance for your cooperation in this matter.

CITY OF QUINCY, MASSACHUSETTS

DEPARTMENT OF PUBLIC WORKS

LOCUS MAP
SCALE: 1"=2000'

DRAWING INDEX

SHEET	TITLE
G–1	ABBREVIATIONS, NOTES AND LEGEND
C–1	ELM AVENUE
C–2	WINTHROP PARK AND MAIN STREET
C–3	WINTHROP STREET AND SEA STREET
C–4	SEA STREET
D–1	DETAILS I
D–2	DETAILS II
CS–1	CONSTRUCTION ZONE SAFETY PLAN

ELM AVENUE AND SEA STREET WATER MAIN REPLACEMENTS

THE HONORABLE THOMAS P. KOCH, MAYOR

DEPARTMENT OF PUBLIC WORKS

DANIEL RAYMONDI, COMMISSIONER

SHAWN HARDY, P.E., CITY ENGINEER

JULY 2016

COMMONWEALTH OF MASSACHUSETTS
LEAH E. STANTON
No. 45779
REGISTERED PROFESSIONAL ENGINEER

7-8-16

Weston&Sampson®
Five Centennial Drive, Peabody, Massachusetts 01960

File No. 218–61

COPYRIGHT 2016 WESTON & SAMPSON

C:\Users\schmidt1\appdata\local\temp\AcPublish_18936\2016 IMP REP_Cover & Locus.dwg

LEGEND

DESCRIPTION	EXISTING	PROPOSED
SANITARY SEWER	S	8"S PVC
FORCE MAIN	FM	6"FM DI
WATER MAIN	W	6"W DI
WATER MAIN WITH POLYETHYLENE ENCASEMENT		6"W DI(POLY)
TEMPORARY WATER		4"W
STORM DRAIN	D	18"D RCP
GAS	G	4"G
ELECTRIC	E	E
TELEPHONE	T	T
HOUSE CONNECTION		6" HOUSE CONN (TYP)
GRINDER PUMP		GP
SANITARY SEWER MANHOLE	S	SMH
STORM DRAIN MANHOLE	D	SDMH
ELECTRICAL MANHOLE	E	EMH
TELEPHONE MANHOLE	T	TMH
AIR RELEASE VALVE MANHOLE		ARMH
FORCE MAIN CLEANOUT MANHOLE		FMCO
CLEANOUT		CO
CATCH BASIN		CB
CATCH BASIN (CURB INLET)		
HYDRANT		
TEMPORARY HYDRANT		H
GATE VALVE	WV	
CHECK VALVE		
CURB STOP		
BUTTERFLY VALVE		
BALL VALVE		
REDUCER		
CAP OR PLUG		
GAS GATE VALVE	GV	
UTILITY POLE		
GUY POLE		
LIGHT POST		
EDGE OF PAVEMENT		
EDGE OF UNPAVED ROAD		
CURB		
SIDEWALK		
RAILROAD		
STONE WALL		
RETAINING WALL	RET WALL	RET WALL
FENCE	X X	X X
INDIVIDUAL DECIDUOUS TREE		
INDIVIDUAL EVERGREEN TREE		
TREE LINE		
SURVEY MARKER		
PROPERTY LINE	PL	
EASEMENT LINE		
LIMIT OF WORK		
APPROX. LIMIT OF REFUSE		
SPOT ELEVATIONS	x 141.5	x141.5
CONTOUR LINES	56	56
DEPRESSION CONTOUR LINES		
HOUSE NUMBER	#35	
FLOOR ELEVATION	FL=56.7	
SILL ELEVATION	S=56.7	
WETLAND		
WETLAND FLAGS		1 2
RIP RAP		
STATE HIGHWAY STATION		
SURFACE MOUNTED DELINEATOR		
GUARD POST		
BOLLARD	B	B
SIGN		
BENCH MARK		
AUGER	A-1	A-1
PERCOLATION TEST	PT 1	PT-1
TEST PIT	TP 1	TP-1
BORING	B-10	B-11
PROBE	P-10	P-11
GROUNDWATER MONITORING WELL	WS-1	WS-1
GAS MONITORING WELL	GMW-10	GMW-10
GAS VENT	GV	GV
HAY BALES		
ROCK OUTCROP		
DRAINAGE DITCH / SWALE		

NOTE: ITEMS SHOWN IN THE LEGEND MAY NOT BE PRESENT IN THESE PLANS

ABBREVIATIONS

AC	ASBESTOS CEMENT PIPE
ACCMP	ASPHALT COATED CORRUGATED METAL PIPE
ARV	AIR RELEASE VALVE
ASTM	AMERICAN SOCIETY FOR TESTING AND MATERIALS
BC	BITUMINOUS CONCRETE
B.F.D.	B FIBER DUCT
BIT	BITUMINOUS
BLDG	BUILDING
BM	BENCH MARK
BO	BLOW OFF
BR	BRASS
BV	BUTTERFLY VALVE
CATV	CABLE TELEVISION
CB	CATCH BASIN
CC	CONCRETE CURB
CI	CAST IRON
CP	CONCRETE PIPE
CITY	CITY'S PORTION OF WATER SERVICE
℄	CENTERLINE
CL	CEMENT LINED
CMP	CORRUGATED METAL PIPE
CONC	CONCRETE
CU	COPPER
CU FT	CUBIC FEET
C.W.D.	CREOSOTE WOOD DUCT
CY	CUBIC YARD
D	STORM DRAIN, DEPTH FROM RIM TO INVERT
DI	DROP INLET, DUCTILE IRON
DIA	DIAMETER
DMH	DRAIN MANHOLE
DWG	DRAWING
E	EAST, ELECTRIC
EA	EACH
EF	EACH FACE
ELEV	ELEVATION
EOP	EDGE OF PAVEMENT
EW	EACH WAY
EXIST	EXISTING
FLG	FLANGE
FT	FEET, FOOT
G	NATURAL GAS
GALV	GALVANIZED
GC	GRANITE CURB
GR	GRANITE
HC	HOUSE CONNECTION
HORIZ	HORIZONTAL
HOUSE	HOMEOWNER'S PORTION OF WATER SERVICE
HP	HIGH PRESSURE
HYD	FIRE HYDRANT
I	INVERT
INV	INVERT
ID	INSIDE DIAMETER
IP	IRON PIPE, INTERMEDIATE PRESSURE
LB	POUND
LF	LINEAR FEET
LP	LOW PRESSURE
LS	LUMP SUM
MAX	MAXIMUM
MB	MAIL BOX
MDC	METROPOLITAN DISTRICT COMMISSION
MDPW	MASSACHUSETTS DEPARTMENT OF PUBLIC WORKS
MECH	MECHANICAL
MH	MANHOLE
MassDOT	MASSACHUSETTS DEPARTMENT OF TRANSPORTATION
MIN	MINIMUM
MISC	MISCELLANEOUS
M.T.D.	MULTI TILE DUCT
MJ	MECHANICAL JOINT
MWRA	MASSACHUSETTS WATER RESOURCES AUTHORITY
N	NORTH
NE	NORTH EAST
NW	NORTH WEST
NF	NOT FOUND
NO OR #	NUMBER
OD	OUTSIDE DIAMETER
PCCP	PRESTRESSED CONCRETE CYLINDER PIPE
PE	PLAIN END, POLYETHYLENE
ℙ	PROPERTY LINE
PL	PLATE
POLY	POLYETHYLENE ENCASEMENT
PVC	POLYVINYL CHLORIDE
PVMT	PAVEMENT
RCP	REINFORCED CONCRETE PIPE
ROW	RIGHT-OF-WAY
RQD	ROCK QUALITY
S	SEWER, SOUTH
SE	SOUTH EAST
SECT	SECTION
SF	SQUARE FEET
SHT	SHEET
SMH	SEWER MANHOLE
SPEC	SPECIFICATIONS
SQ FT	SQUARE FEET
SS	SEWER SERVICE, STAINLESS STEEL, SOLID SLEEVE
STA	STATION
STL	STEEL
SW	SIDEWALK, SOUTH WEST
T	HYDROSTATIC THRUST, TELEPHONE
TBM	TEMPORARY BENCH MARK
THK	THICK (NESS)
TYP	TYPICAL
UNK	UNKNOWN
UP	UTILITY POLE
VC	VITRIFIED CLAY
VERT	VERTICAL
W	WATER, WEST
W/	WITH
W/O	WITHOUT

CONSTRUCTION NOTES

1. THE CONTRACTOR SHALL CALL DIGSAFE AT 1-888-344-7233 AT LEAST 72 HOURS, SATURDAYS, SUNDAYS, AND HOLIDAYS EXCLUDED, PRIOR TO EXCAVATING AT ANY LOCATION. A COPY OF THE DIGSAFE PROJECT REFERENCE NUMBER(S) SHALL BE GIVEN TO THE OWNER PRIOR TO EXCAVATION.
2. LOCATIONS OF EXISTING PIPES, CONDUITS, UTILITIES, FOUNDATIONS AND OTHER UNDERGROUND OBJECTS ARE NOT WARRANTED TO BE CORRECT AND THE CONTRACTOR SHALL HAVE NO CLAIM ON THAT ACCOUNT SHOULD THEY BE OTHER THAN SHOWN.
3. TEST PITS TO LOCATE EXISTING UTILITIES MAY BE ORDERED BY THE ENGINEER TO DETERMINE WHETHER TO RAISE OR LOWER THE PROPOSED WATER MAIN TO CLEAR EXISTING UTILITIES OR VERIFY EXISTING UTILITY LOCATION, SIZE AND TYPE.
4. STONE WALLS, FENCES, MAIL BOXES, SIGNS, CURBS, LIGHT POLES, ETC. SHALL BE REMOVED AS NECESSARY TO PERFORM THE WORK AND REPLACED TO A CONDITION AT LEAST EQUAL TO THAT BEFORE CONSTRUCTION BEGAN. UNLESS OTHERWISE INDICATED, ALL SUCH WORK SHALL BE INCIDENTAL TO CONSTRUCTION OF THE PROJECT.
5. ALL PAVEMENT DISTURBED BY THE CONTRACTOR'S OPERATIONS SHALL BE REPLACED IN ACCORDANCE WITH THE SPECIFICATIONS AND AS SHOWN ON THE DRAWINGS.
6. ALL AREAS DISTURBED BY THE CONTRACTOR BEYOND PAYMENT LIMITS SHALL BE RESTORED AT NO ADDITIONAL COST TO THE OWNER.
7. UNLESS OTHERWISE INDICATED, CONCRETE USED FOR PIPE ANCHOR BLOCKS, BACKING, PIPE CRADLES, ARCHES, AND FILL SHALL HAVE A MINIMUM COMPRESSIVE STRENGTH OF 3000 PSI AT 28 DAYS.
8. APPROVED JOINT RESTRAINT METHODS SHALL BE PROVIDED FOR WATER MAINS WHERE ANY BENDS, TEES, PLUGS, OR WYES ARE INSTALLED. CONCRETE THRUST BLOCKS, ANCHOR BLOCKS AND TIE RODS MAY BE USED FOR 6-INCH AND 8-INCH PIPE WHERE JOINT RESTRAINT IS NOT FEASIBLE, ONLY AS APPROVED BY THE ENGINEER.
9. THE CONTRACTOR SHALL NOT STORE ANY APPARATUS, MATERIALS, SUPPLIES, OR EQUIPMENT ON DRAINAGE STRUCTURES OR WITHIN 100 FEET OF WETLANDS, OR IN ROADWAY MEDIANS.
10. NEW WATER MAINS AND SERVICES SHALL BE INSTALLED AT THE MINIMUM DEPTH FROM FINISH GRADE TO TOP OF PIPE AS SHOWN ON THE DRAWINGS. WHERE NECESSARY, NEW WATER MAINS SHALL BE INSTALLED AT A GREATER DEPTH TO CLEAR OBSTACLES SHOWN ON THE DRAWINGS AT NO ADDITIONAL COST TO THE OWNER. MINIMUM CLEARANCES TO UTILITIES, AS SHOWN ON THE DRAWINGS SHALL BE MAINTAINED.
11. EXISTING SERVICES SHALL NOT BE CONNECTED TO THE PROPOSED WATER MAIN UNTIL THAT MAIN HAS PASSED PRESSURE TEST AND DISINFECTION REQUIREMENTS.
12. WATER SERVICE SHALL NOT BE INTERRUPTED MORE THAN 4 HOURS WITHOUT PRIOR APPROVAL OF THE OWNER.
13. AS APPROVED BY THE ENGINEER, HYDRANTS SHALL BE EITHER DISPOSED OF OR SALVAGED. SALVAGED HYDRANTS SHALL BE DELIVERED TO A LOCATION TO BE DETERMINED BY THE OWNER.
14. ANY HYDRANT WHICH IS NOT IN SERVICE SHALL BE COVERED WITH A SECURELY FASTENED BURLAP BAG.
15. THE CONTRACTOR SHALL REMOVE ALL VALVE BOXES OF VALVES ON ABANDONED WATER MAINS. THESE AREAS SHALL BE BACKFILLED AND PAVED AS REQUIRED. VALVE BOXES SHALL BE STACKED AT THE QUINCY PUBLIC WORKS DEPARTMENT OR DISPOSED OF AS APPROVED BY THE ENGINEER.
16. EXISTING WATER MAINS OR SERVICES PARALLEL TO PROPOSED WATER MAINS OR SERVICES SHALL ONLY BE ABANDONED IF SHOWN ON THE PLANS OR APPROVED BY THE ENGINEER OR OWNER.
17. THE LOCATION OF PIPES, CAPS, REDUCERS, BENDS, AND OTHER FITTINGS AT POINTS OF CONNECTIONS TO EXISTING MAINS IS APPROXIMATE. CONTRACTOR SHALL DIG A TEST PIT AT EACH LOCATION TO DETERMINE THE DIAMETER AND MATERIAL OF EXISTING PIPE AND THE LOCATION OF THE TIE-IN POINT.
18. ALL STREET EXCAVATIONS SHALL BE COMPLETELY CLOSED AT THE END OF EACH WORKING DAY BY BACKFILLING. COVERING WITH STEEL PLATES MAY BE ALLOWED IF APPROVED BY THE ENGINEER. IF STEEL PLATES ARE ALLOWED, THEY SHALL BE RECESSED AND PINNED WHEN UTILIZED IN THE ROADWAY DURING WINTER MONTHS.
19. THE OWNER WILL, ON A MINIMUM OF 72 HOURS NOTICE FROM THE CONTRACTOR, OPEN AND/OR CLOSE ANY VALVES REQUIRED FOR DRAINING OR ADMITTING WATER TO THE VARIOUS SECTIONS OF THE WATER MAINS. HOWEVER, THE CONTRACTOR MAY OCCASIONALLY BE REQUIRED TO OPERATE VALVES IN ORDER TO OBTAIN SHUTDOWNS. THE CONTRACTOR IS RESPONSIBLE TO NOTIFY IN WRITING 24 HOURS IN ADVANCE ANY OCCUPANT THAT WILL BE WITHOUT WATER DUE TO A SHUTDOWN.
20. SOME WATER SERVICE CONNECTIONS MAY NOT BE SHOWN ON THE DRAWINGS. THE OWNER WILL MARK THE LOCATION OF SUCH CONNECTIONS, PROVIDED THE CONTRACTOR GIVES THE OWNER AT LEAST 5 WORKING DAYS ADVANCE NOTICE.
21. ELEVATIONS REFERENCED ARE NATIONAL GEODETIC VERTICAL DATUM (NGVD) OF 1988.
22. EXISTING UTILITY INFORMATION, TOPOGRAPHIC INFORMATION, EDGE OF PAVEMENT, UTILITY POLE LOCATIONS, AND LOCATIONS OF EXISTING ABOVE GROUND STRUCTURES WERE TAKEN FROM THE CITY'S GIS. THE GIS WAS CREATED FROM DIGITIZING AERIAL PHOTOGRAMMETRY AND SUPPLEMENTAL FIELD AND UTILITY SURVEY.
23. SEWER SERVICES WERE NOT SURVEYED BUT WERE LOCATED ON THE PLANS USING SEWER SERVICE CARDS.
24. TEMPORARY WATER SERVICE PIPE WILL BE REQUIRED FOR ALL RESIDENTS WITHIN THE CONTRACT LIMITS WHERE THEY WILL BE WITHOUT WATER FOR A PERIOD OF 4 HOURS OR MORE AND ALSO WHERE REQUIRED BY THE ENGINEER. TEMPORARY GATE VALVES AND HYDRANTS ARE TO BE PROVIDED, AS REQUIRED BY THE ENGINEER.
25. PROPOSED WATER MAINS SHALL BE INSTALLED IN THE SAME TRENCH AS THE EXISTING WATER MAINS, UNLESS OTHERWISE APPROVED BY THE ENGINEER OR SHOWN ON THE PLANS.
26. CONTRACTOR SHALL REMOVE AND DISPOSE OF EXISTING WATER MAIN WHEN THE EXISTING WATER MAIN IS WITHIN THE NEW WATER MAIN TRENCH.
27. CONTRACTOR SHALL BE RESPONSIBLE FOR MAINTAINING TEMPORARY WATER MAIN 24/7 WHILE ACTIVELY BEING USED TO FEED DWELLINGS AND BUILDINGS.
28. ALL NOTED DUCTILE IRON WATER MAINS SHALL BE ENCASED IN POLYETHYLENE CONFORMING TO AWWA C105 METHOD A.
29. CONTRACTOR SHALL REPAIR ALL PAVEMENT MARKINGS INCLUDING, BUT NOT LIMITED TO, CROSSWALKS, ROADWAY LINES, AND STOP BARS.

COPYRIGHT 2016 WESTON & SAMPSON

Weston&Sampson®
100 Foxborough Blvd., S.250, Foxborough, MA
(508) 698-3034 (800) SAMPSON
www.westonandsampson.com

No.	Date	Dr.By	Ck.By	App.By	Description
A	P	P	R	O	V E D

7-8-16
DATE
REGISTERED PROFESSIONAL ENGINEER

COMMONWEALTH OF MASSACHUSETTS LEAH E. STANTON No. 45731 REGISTERED PROFESSIONAL ENGINEER

CITY OF QUINCY, MASSACHUSETTS
DEPARTMENT OF PUBLIC WORKS

ELM AVENUE AND SEA STREET WATER MAIN REPLACEMENTS

ABBREVIATIONS, NOTES AND LEGEND

CADD NO.	SCALE:	CONTRACT:	JOB NO.	DR.BY	DSN.BY	CHK.BY	APP.BY
2016 WM REP	NOTED		2160211	TWS	TWS	MDW	LES

G-1

FILE NO. 218-60

SHEET 2 OF 9

C:\Users\jschmidt1\appdata\local\temp\AcPublish_19936\2016 WM REP.dwg

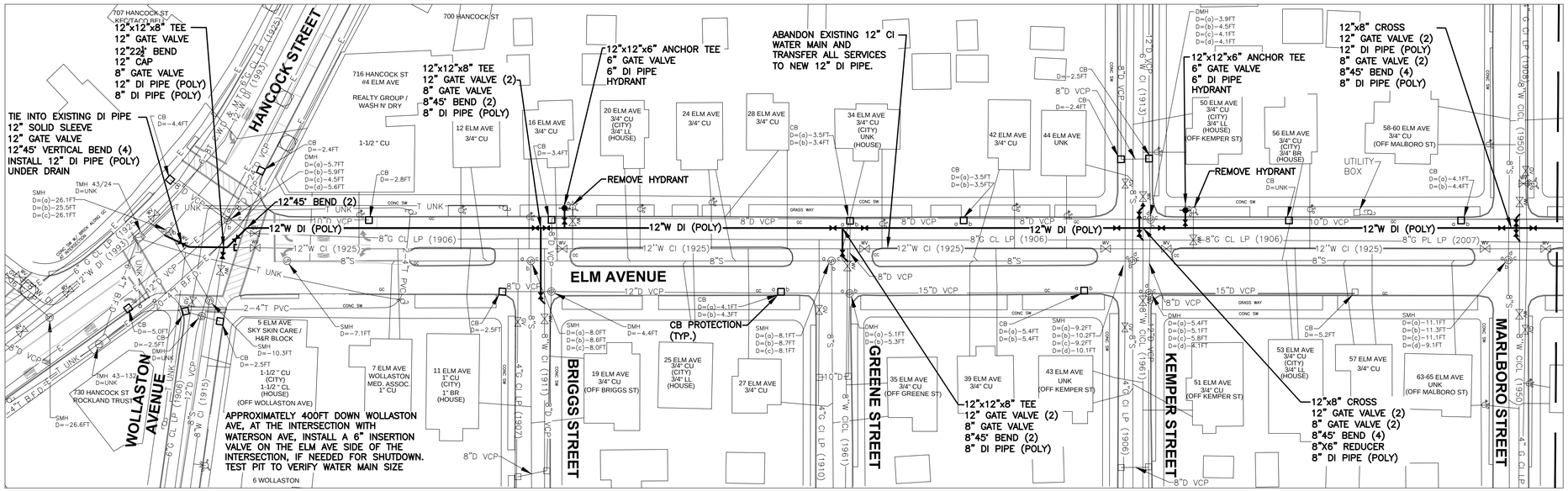

PLAN

SCALE: 1"=40'

0 40' 80' 120'

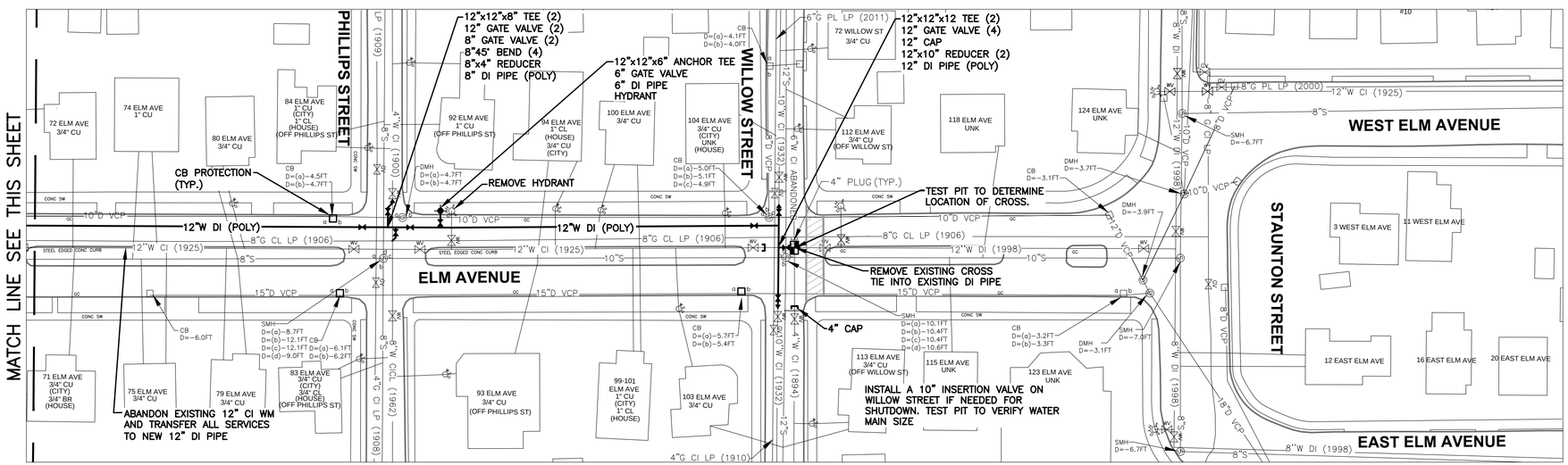

PLAN

SCALE: 1"=40'

0 40' 80' 120'

NOTES:

1. SIZE AND MATERIAL OF THE WATER SERVICES FOR EACH BUILDING ARE LISTED ON THE PLANS BASED ON INFORMATION FROM WATER SERVICE CARDS. UNLESS NOTED, THE CONTRACTOR SHALL ASSUME THAT THE SERVICE IS THE MATERIAL LISTED FROM THE WATER MAIN TO THE WATER METER IN THE BUILDING. VERIFY ALL INFORMATION WITH THE WATER DEPARTMENT.
2. THE CONTRACTOR SHALL REPLACE ALL NON-COPPER WATER SERVICES FROM THE WATER MAIN TO THE WATER METER (HOUSE) WITH NEW COPPER PIPE, CORPORATION STOP AND CURB STOP, AS REQUIRED, COORDINATE THIS WORK WITH THE WATER DEPARTMENT. THE CONTRACTOR SHALL ASSUME ALL UNKNOWN WATER SERVICE MATERIAL (UNK) IS A NON-COPPER SERVICE.
3. ALL NEW WATER SERVICES SHALL BE THE SAME SIZE AS THE EXISTING WATER SERVICES, EXCEPT THAT NO SERVICES SHALL BE LESS THAN 1" IN DIAMETER. COORDINATE THIS WORK WITH THE WATER DEPARTMENT.
4. THE CONTRACTOR SHALL INSTALL A NEW CORPORATION STOP, CURB BOX, AND NEW COPPER PIPING FOR ALL WATER SERVICES. NO COUPLING OR UNION SHALL BE INSTALLED BETWEEN THE NEW WATER MAIN AND THE CURB STOP.
5. ALL JOINTS IN PROXIMITY TO FITTINGS SHALL BE RESTRAINED. SEE TABLE 1: SHEET D-1. MECHANICAL JOINT SOLID SLEEVE COUPLINGS SHALL BE USED WHENEVER POSSIBLE.
6. ALL WATER MAIN INSTALLED WITH LESS THAN 5 FEET OF COVER SHALL BE INSULATED.

COPYRIGHT 2016 WESTON & SAMPSON

Weston&Sampson®
100 Foxborough Blvd., S.250, Foxborough, MA
(508) 698-3034 (800) SAMPSON
www.westonandsampson.com

No.	Date	Dr.By	Ck.By	App.By	Description
		A P	P R	O V	E D

7-8-16
DATE

REGISTERED PROFESSIONAL ENGINEER

COMMONWEALTH OF MASSACHUSETTS LEAH E. STANTON No. 47179 REGISTERED PROFESSIONAL ENGINEER

CITY OF QUINCY, MASSACHUSETTS
DEPARTMENT OF PUBLIC WORKS

ELM AVENUE AND SEA STREET WATER MAIN REPLACEMENTS

ELM AVENUE

CADD NO.	SCALE:	CONTRACT:	JOB NO.	DR.BY	DSN.BY	CHK.BY	APP.BY
2016 WM REP	NOTED		2160211	TWS	TWS	MDW	LES

FILE NO. 218-59

C-1

SHEET 3 OF 9

C:\Users\schmidtt\appdata\local\temp\AcPublish_18936\2016 WM REP.dwg

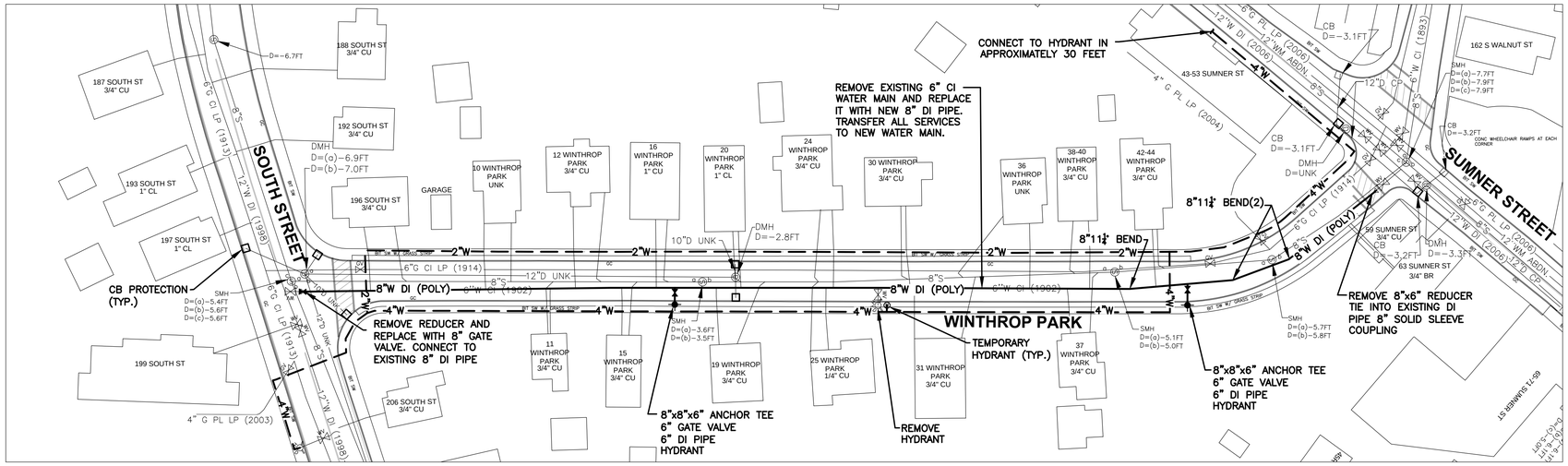

PLAN

SCALE: 1"=40'

0 40' 80' 120'

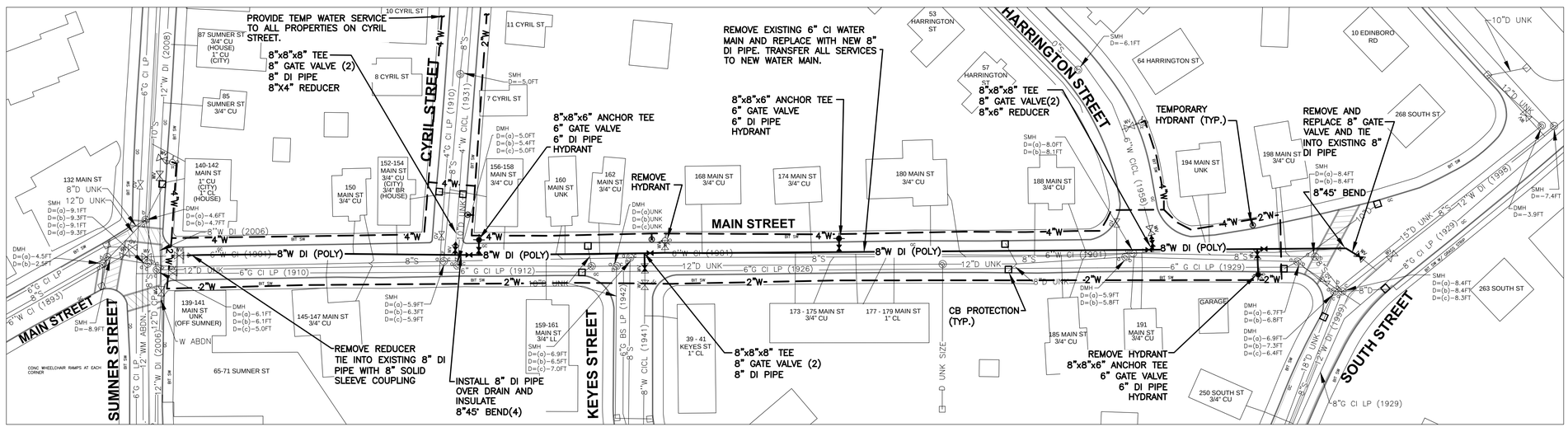

PLAN

SCALE: 1"=40'

0 40' 80' 120'

NOTES:

1. SIZE AND MATERIAL OF THE WATER SERVICES FOR EACH BUILDING ARE LISTED ON THE PLANS BASED ON INFORMATION FROM WATER SERVICE CARDS. UNLESS NOTED, THE CONTRACTOR SHALL ASSUME THAT THE SERVICE IS THE MATERIAL LISTED FROM THE WATER MAIN TO THE WATER METER IN THE BUILDING. VERIFY ALL INFORMATION WITH THE WATER DEPARTMENT.
2. THE CONTRACTOR SHALL REPLACE ALL NON-COPPER WATER SERVICES FROM THE WATER MAIN TO THE WATER METER (HOUSE) WITH NEW COPPER PIPE, CORPORATION STOP AND CURB STOP, AS REQUIRED, COORDINATE THIS WORK WITH THE WATER DEPARTMENT. THE CONTRACTOR SHALL ASSUME ALL UNKNOWN WATER SERVICE MATERIAL (UNK) IS A NON-COPPER SERVICE.
3. ALL NEW WATER SERVICES SHALL BE THE SAME SIZE AS THE EXISTING WATER SERVICES, EXCEPT THAT NO SERVICES SHALL BE LESS THAN 1" IN DIAMETER. COORDINATE THIS WORK WITH THE WATER DEPARTMENT.
4. THE CONTRACTOR SHALL INSTALL A NEW CORPORATION STOP, CURB BOX, AND NEW COPPER PIPING FOR ALL WATER SERVICES. NO COUPLING OR UNION SHALL BE INSTALLED BETWEEN THE NEW WATER MAIN AND THE CURB STOP.
5. ALL JOINTS IN PROXIMITY TO FITTINGS SHALL BE RESTRAINED. SEE TABLE 1: SHEET D-1. MECHANICAL JOINT SOLID SLEEVE COUPLINGS SHALL BE USED WHENEVER POSSIBLE.
6. ALL WATER MAIN INSTALLED WITH LESS THAN 5 FEET OF COVER SHALL BE INSULATED.

COPYRIGHT 2016 WESTON & SAMPSON

Weston&Sampson®
100 Foxborough Blvd., S.250, Foxborough, MA
(508) 698-3034 (800) SAMPSON
www.westonandsampson.com

No.	Date	Dr.By	Ck.By	App.By	Description
		A	P	P	R O V E D

7-8-16
DATE

REGISTERED PROFESSIONAL ENGINEER

CITY OF QUINCY, MASSACHUSETTS
DEPARTMENT OF PUBLIC WORKS

ELM AVENUE AND SEA STREET WATER MAIN REPLACEMENTS

WINTHROP PARK AND MAIN STREET

CADD NO.	SCALE:	CONTRACT:	JOB NO.	DR.BY	DSN.BY	CHK.BY	APP.BY
2016 WM REP	NOTED		2160211	TWS	TWS	MDW	LES

FILE NO. 218-58

C-2

SHEET 4 OF 9

C:\Users\schmidtt\appdata\local\temp\AcPublish_18936\2016 WM REP.dwg

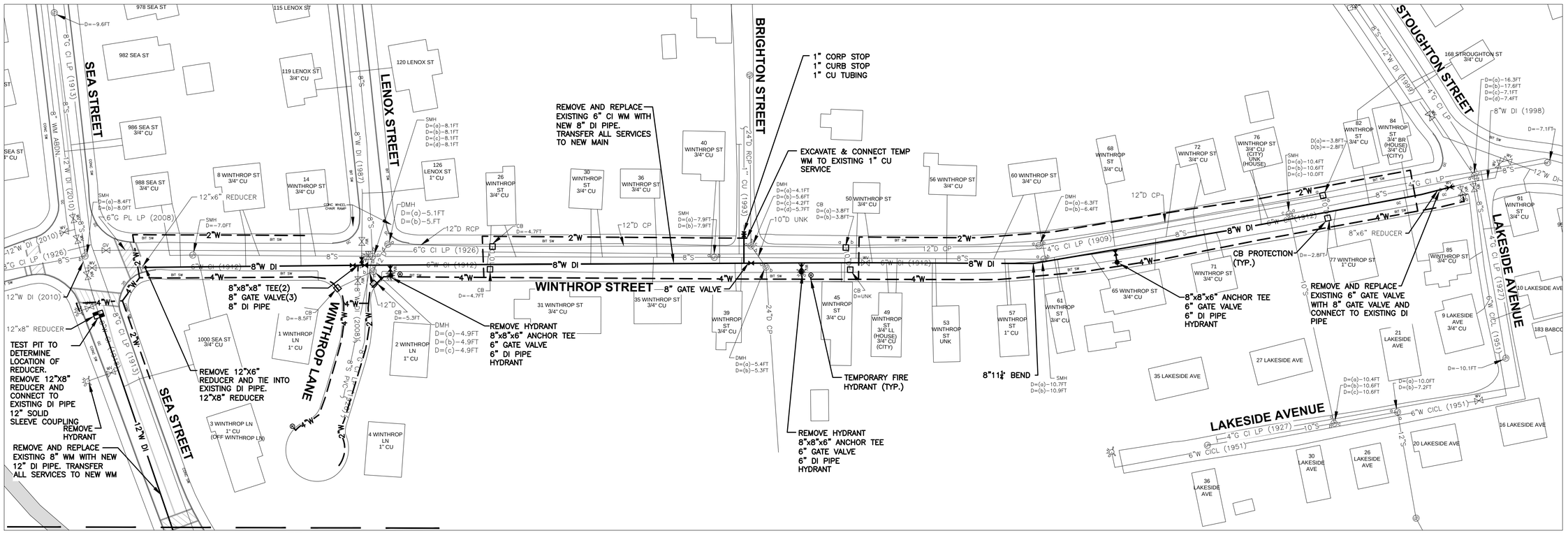

PLAN
SCALE: 1"=40'
0 40' 80' 120'

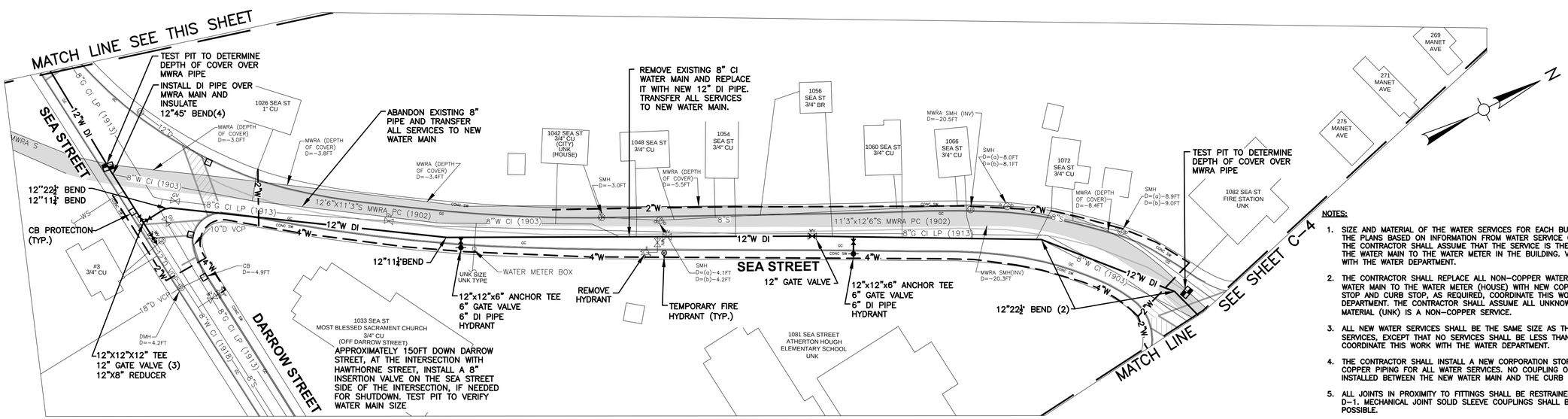

PLAN
SCALE: 1"=40'
0 40' 80' 120'

NOTES:

1. SIZE AND MATERIAL OF THE WATER SERVICES FOR EACH BUILDING ARE LISTED ON THE PLANS BASED ON INFORMATION FROM WATER SERVICE CARDS. UNLESS NOTED, THE CONTRACTOR SHALL ASSUME THAT THE SERVICE IS THE MATERIAL LISTED FROM THE WATER MAIN TO THE WATER METER IN THE BUILDING. VERIFY ALL INFORMATION WITH THE WATER DEPARTMENT.
2. THE CONTRACTOR SHALL REPLACE ALL NON-COPPER WATER SERVICES FROM THE WATER MAIN TO THE WATER METER (HOUSE) WITH NEW COPPER PIPE, CORPORATION STOP AND CURB STOP, AS REQUIRED, COORDINATE THIS WORK WITH THE WATER DEPARTMENT. THE CONTRACTOR SHALL ASSUME ALL UNKNOWN WATER SERVICE MATERIAL (UNK) IS A NON-COPPER SERVICE.
3. ALL NEW WATER SERVICES SHALL BE THE SAME SIZE AS THE EXISTING WATER SERVICES, EXCEPT THAT NO SERVICES SHALL BE LESS THAN 1" IN DIAMETER. COORDINATE THIS WORK WITH THE WATER DEPARTMENT.
4. THE CONTRACTOR SHALL INSTALL A NEW CORPORATION STOP, CURB BOX, AND NEW COPPER PIPING FOR ALL WATER SERVICES. NO COUPLING OR UNION SHALL BE INSTALLED BETWEEN THE NEW WATER MAIN AND THE CURB STOP.
5. ALL JOINTS IN PROXIMITY TO FITTINGS SHALL BE RESTRAINED. SEE TABLE 1: SHEET D-1. MECHANICAL JOINT SOLID SLEEVE COUPLINGS SHALL BE USED WHENEVER POSSIBLE.
6. ALL WATER MAIN INSTALLED WITH LESS THAN 5 FEET OF COVER SHALL BE INSULATED.
7. WORK ON SEA STREET WILL BE REQUIRED TO BE PERFORMED BETWEEN HOURS OF 9:00A.M.-4:00P.M.

COPYRIGHT 2016 WESTON & SAMPSON

Weston&Sampson®
100 Foxborough Blvd., S.250, Foxborough, MA
(508) 698-3034 (800) SAMPSON
www.westonandsampson.com

No.	Date	Dr.By	Ck.By	App.By	Description
A					
P					
R					
O					
V					
E					
D					

7-8-16
DATE
REGISTERED PROFESSIONAL ENGINEER

COMMONWEALTH OF MASSACHUSETTS
LEAH E. STANTON
No. 45778
REGISTERED PROFESSIONAL ENGINEER

CITY OF QUINCY, MASSACHUSETTS
DEPARTMENT OF PUBLIC WORKS

ELM AVENUE AND SEA STREET WATER MAIN REPLACEMENTS

WINTHROP STREET AND SEA STREET

CADD NO.	SCALE:	CONTRACT:	JOB NO.	DR.BY	DSN.BY	CHK.BY	APP.BY
2016 WM REP	NOTED	–	2160211	TWS	TWS	MDW	LES

C-3

FILE NO. 218-57

SHEET 5 OF 9

C:\Users\schmidtt\appdata\local\temp\AcPublish_18936\2016 WM REP.dwg

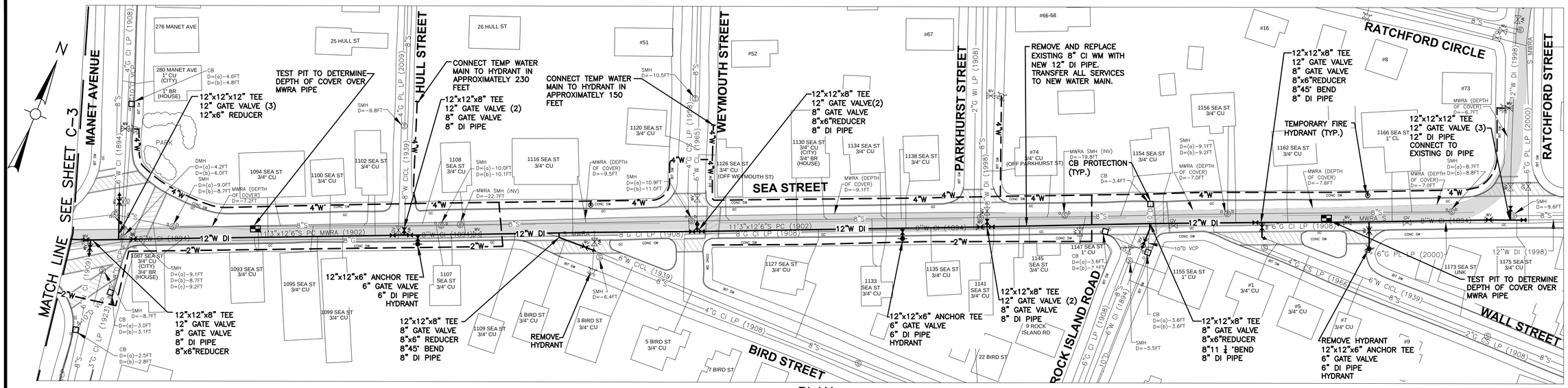

PLAN

SCALE: 1"=40'

0 40' 80' 120'

NOTES:

1. SIZE AND MATERIAL OF THE WATER SERVICES FOR EACH BUILDING ARE LISTED ON THE PLANS BASED ON INFORMATION FROM WATER SERVICE CARDS. UNLESS NOTED, THE CONTRACTOR SHALL ASSUME THAT THE SERVICE IS THE MATERIAL LISTED FROM THE WATER MAIN TO THE WATER METER IN THE BUILDING. VERIFY ALL INFORMATION WITH THE WATER DEPARTMENT.
2. THE CONTRACTOR SHALL REPLACE ALL NON-COPPER WATER SERVICES FROM THE WATER MAIN TO THE WATER METER (HOUSE) WITH NEW COPPER PIPE, CORPORATION STOP AND CURB STOP, AS REQUIRED. COORDINATE THIS WORK WITH THE WATER DEPARTMENT. THE CONTRACTOR SHALL ASSUME ALL UNKNOWN WATER SERVICE MATERIAL (UNK) IS A NON-COPPER SERVICE.
3. ALL NEW WATER SERVICES SHALL BE THE SAME SIZE AS THE EXISTING WATER SERVICES, EXCEPT THAT NO SERVICES SHALL BE LESS THAN 1" IN DIAMETER. COORDINATE THIS WORK WITH THE WATER DEPARTMENT.
4. THE CONTRACTOR SHALL INSTALL A NEW CORPORATION STOP, CURB BOX, AND NEW COPPER PIPING FOR ALL WATER SERVICES. NO COUPLING OR UNION SHALL BE INSTALLED BETWEEN THE NEW WATER MAIN AND THE CURB STOP.
5. ALL JOINTS IN PROXIMITY TO FITTINGS SHALL BE RESTRAINED. SEE TABLE 1: SHEET D-1. MECHANICAL JOINT SOLID SLEEVE COUPLINGS SHALL BE USED WHENEVER POSSIBLE.
6. ALL WATER MAIN INSTALLED WITH LESS THAN 5 FEET OF COVER SHALL BE INSULATED.
7. WORK ON SEA STREET WILL BE REQUIRED TO BE PERFORMED BETWEEN HOURS OF 9:00A.M.-4:00P.M.

COPYRIGHT 2016 WESTON & SAMPSON

Weston&Sampson®
100 Foxborough Blvd., S.250, Foxborough, MA
(508) 698-3034 (800) SAMPSON
www.westonandsampson.com

No.	Date	Dr.By	Ck.By	App.By	Description
		A P R O V E D			

7-8-16
DATE

REGISTERED PROFESSIONAL ENGINEER

COMMONWEALTH OF MASSACHUSETTS LEAH E. STANTON No. 47179 REGISTERED PROFESSIONAL ENGINEER

CITY OF QUINCY, MASSACHUSETTS
DEPARTMENT OF PUBLIC WORKS

ELM AVENUE AND SEA STREET WATER MAIN REPLACEMENTS

SEA STREET

CADD NO.	SCALE:	CONTRACT:	JOB NO.	DR.BY	DSN.BY	CHK.BY	APP.BY
2016 WM REP	NOTED	-	2160211	TWS	TWS	MDW	LES

C-4

FILE NO. 218-56

SHEET 6 OF 9

C:\Users\schmidtt\appdata\local\temp\AcPublish_18936\2016 WM REP.dwg

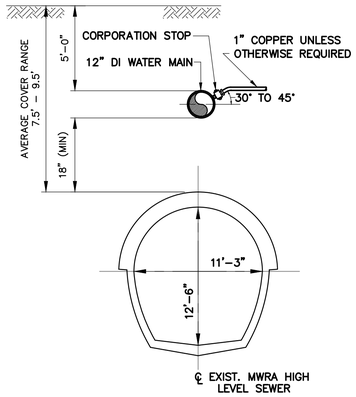

MWRA DETAIL 1:
WATER MAIN & WATER SERVICE INSTALLATION OVER MWRA HIGH LEVEL SEWER BETWEEN MANET AVE. & PARKHURST ST.

N.T.S.

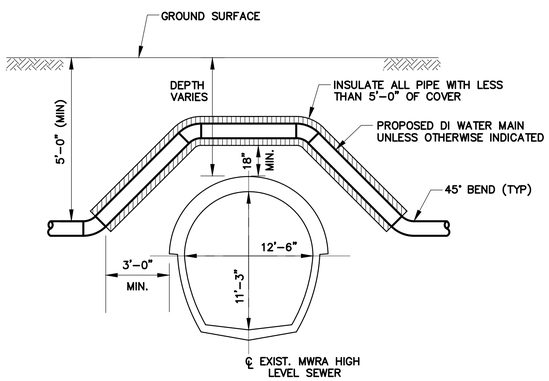

NOTES:

1. DUCTILE IRON WATER MAIN SHALL CROSS A MINIMUM OF 4'–0" FROM ANY JOINT ON THE MWRA SEWER MAIN.
2. NO VALVES OR APPURTENANCES SHALL BE INSTALLED IN CROSSING PIPING BETWEEN 45° BENDS.

MWRA DETAIL 2:
WATER MAIN CROSSING DETAIL
INTERSECTION OF SEA ST. AND DARROW ST.

N.T.S.

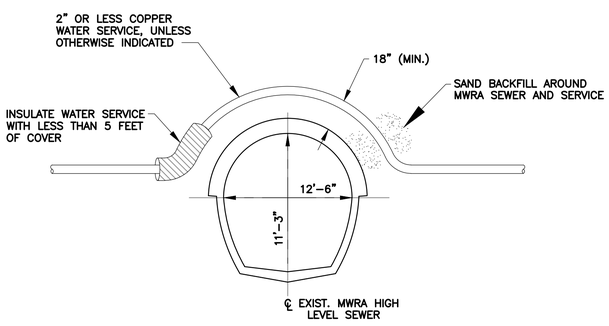

MWRA DETAIL 3:
WATER SERVICE RELOCATION DETAIL

N.T.S.

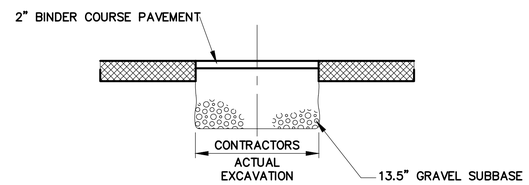

TYPE 1
TEMPORARY TRENCH PAVEMENT

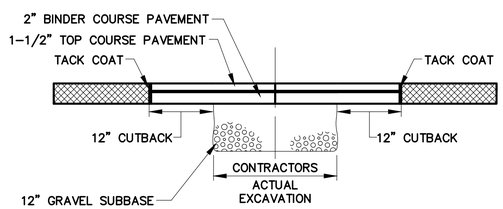

TYPE 2:
PERMANENT TRENCH PAVEMENT WITH CUTBACKS

NOTE:

1. SEE SECTION 02745, PAVING FOR PAVEMENT SCHEDULE.

PAVEMENT REPLACEMENT DETAILS

N.T.S.

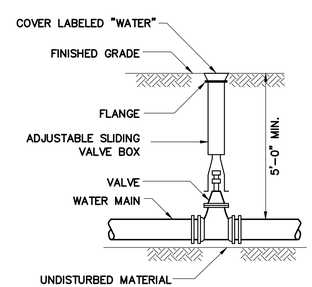

VALVE AND BOX DETAIL

N.T.S.

TABLE 1

REQUIRED LENGTH OF RESTRAINED JOINTS FROM FITTINGS (FEET)

PIPE SIZE	90° BEND	45° BEND OR WYE BRANCH	22 1/2° BEND	11 1/4° BEND	PLUG, CAP OR IN–LINE VALVE	TEE (BRANCH)
6"	25 (30.5)	10.5 (12.5)	5 (6)	2.5 (3)	43 (64)	34 (51)
8"	33 (40)	13.5 (16.5)	6.5 (8)	3 (4)	55 (82)	47 (70)
10"	40 (48.5)	16.5 (20)	8 (9.5)	4 (5)	67 (100)	58 (87)
12"	47 (56.5)	19.5 (23.5)	9.5 (11.5)	4.5 (5.5)	79 (118)	70 (105)
16"	59.5 (72)	24.5 (30)	12 (14.5)	6 (7)	101 (152)	92 (139)
20"	72 (86.5)	30 (36)	14.5 (17)	7 (8.5)	123 (184)	114 (171)
24"	84 (100)	35 (41)	16.5 (20)	8 (10)	144 (216)	134 (202)
30"	100 (120)	41 (50)	20 (24)	10 (12)	174 (261)	165 (247)

NOTES:

1. RESTRAINED LENGTHS LISTED IN PARENTHESES ARE FOR PIPE WRAPPED IN POLYETHYLENE. THE OTHER ASSOCIATED LENGTHS ARE FOR PLAIN UNWRAPPED DUCTILE IRON PIPE.
2. THE CONTRACTOR SHALL USE THIS TABLE IN CONJUNCTION WITH THE APPROPRIATE PIPE SPECIFICATION SECTION.

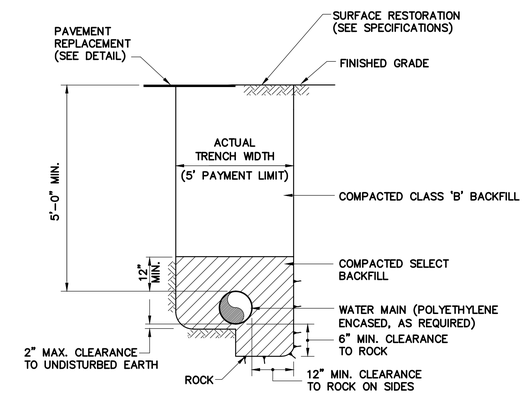

WATER MAIN TRENCH DETAIL

N.T.S.

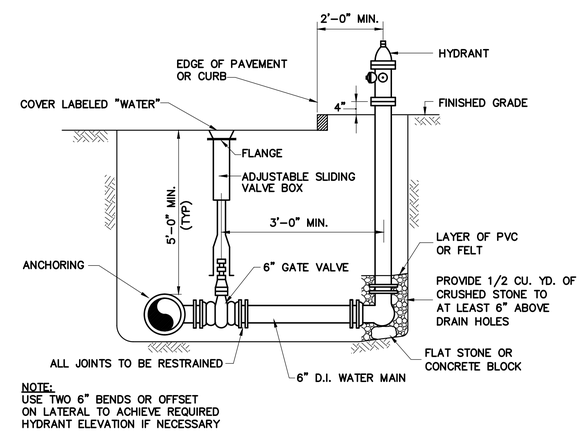

NOTE:
USE TWO 6" BENDS OR OFFSET ON LATERAL TO ACHIEVE REQUIRED HYDRANT ELEVATION IF NECESSARY

HYDRANT AND VALVE DETAIL

N.T.S.

COPYRIGHT 2016 WESTON & SAMPSON

Weston&Sampson®
100 Foxborough Blvd., S.250, Foxborough, MA
(508) 698-3034 (800) SAMPSON
www.westonandsampson.com

No.	Date	Dr.By	Ck.By	App.By	Description
A		P	P	R	O V E D

7-8-16
DATE

REGISTERED PROFESSIONAL ENGINEER

COMMONWEALTH OF MASSACHUSETTS LEAH E. STANTON No. 45779 REGISTERED PROFESSIONAL ENGINEER

CITY OF QUINCY, MASSACHUSETTS
DEPARTMENT OF PUBLIC WORKS
ELM AVENUE AND SEA STREET WATER MAIN REPLACEMENTS
DETAILS I

CADD NO.	SCALE:	CONTRACT:	JOB NO.	DR.BY	DSN.BY	CHK.BY	APP.BY
2016 WM REP	NOTED	–	2160211	TWS	TWS	MDW	LES

D-1

FILE NO. 218-55

SHEET 7 OF 9

C:\Users\jschmidt\appdata\local\temp\AcPublish_18930\2016 WM REP_Details.dwg

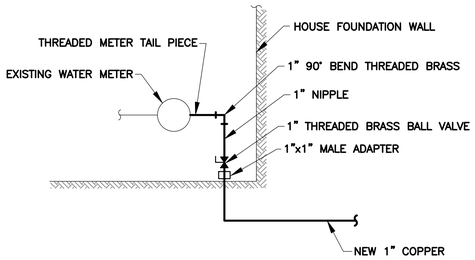

ELEVATION VIEW

NOTES:

1. VERIFY SIZE OF HOUSE METER BEFORE DOING WORK.
2. UTILIZE LOW LEAD THREADED BRASS FITTINGS BEFORE WATER METER.
3. METER TAIL PIECE SHALL REDUCE PIPE TO METER SIZE, AS NECESSARY.
4. ADJUST HEIGHT OF BRASS THREADED FITTINGS TO MEET EXISTING WATER METER.
5. BREAK UP BASEMENT FLOOR AND UTILIZE 3" CONCRETE TO REPAIR FLOOR.
6. RE-SECURE GROUND WIRE AS NECESSARY.
7. COORDINATE ALL WORK WITH THE WATER DEPARTMENT AND HOME OWNER.

SERVICE REPLACEMENT TO HOUSE METER
N.T.S.

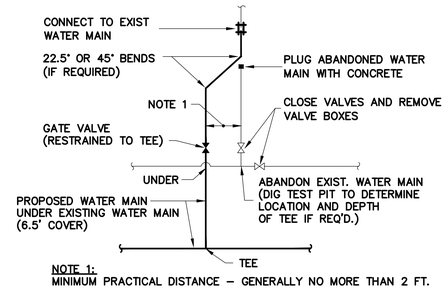

NOTE 1:
MINIMUM PRACTICAL DISTANCE – GENERALLY NO MORE THAN 2 FT.

WATER MAIN LATERAL CONNECTION
N.T.S.

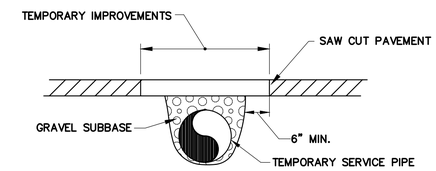

TEMPORARY SERVICE PIPE ROADWAY CROSSING DETAIL
N.T.S.

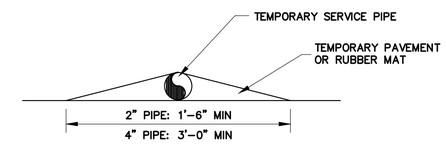

TEMPORARY SERVICE PIPE DRIVEWAY CROSSING DETAIL
N.T.S.

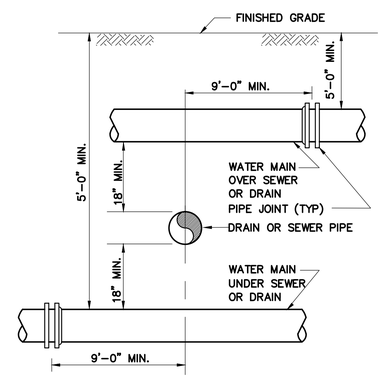

SEWER OR DRAIN CROSSING DETAIL
N.T.S.

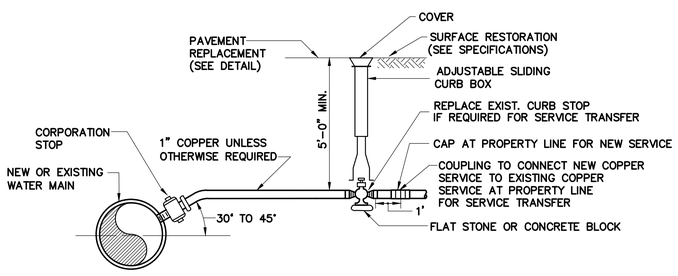

NOTES:

1. PROVIDE SADDLE FOR ALL AC AND PVC MAINS AND ALL 2" OR LARGER STOPS.
2. REPLACE ALL NON-COPPER WATER SERVICES FROM THE WATER MAIN TO THE HOUSE WATER METER WITH THE SAME SIZE AS THE EXISTING SERVICE, EXCEPT NO SERVICE SHALL BE LESS THAN 1" IN DIAMETER.

WATER SERVICE DETAIL
N.T.S.

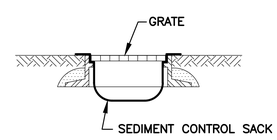

CATCH BASIN PROTECTION DETAIL
N.T.S.

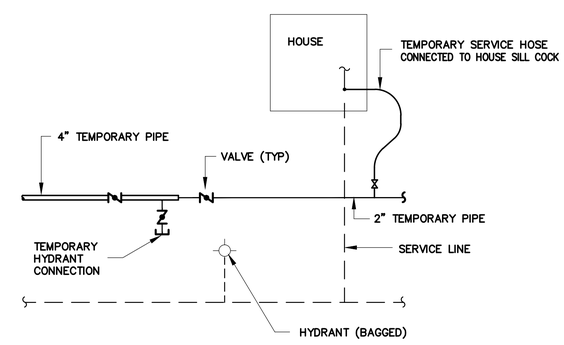

TEMPORARY SERVICE PIPE DETAIL
N.T.S.

COPYRIGHT 2016 WESTON & SAMPSON

Weston&Sampson®
100 Foxborough Blvd., S.250, Foxborough, MA
(508) 698-3034 (800) SAMPSON
www.westonandsampson.com

No.	Date	Dr.By	Ck.By	App.By	Description
		A P	P R	O V	E D

7-8-16
DATE

REGISTERED PROFESSIONAL ENGINEER

COMMONWEALTH OF MASSACHUSETTS LEAH E. STANTON No. 47179 REGISTERED PROFESSIONAL ENGINEER

CITY OF QUINCY, MASSACHUSETTS
DEPARTMENT OF PUBLIC WORKS

ELM AVENUE AND SEA STREET WATER MAIN REPLACEMENTS

DETAILS II

CADD NO.	SCALE:	CONTRACT:	JOB NO.	DR.BY	DSN.BY	CHK.BY	APP.BY
2016 WM REP	NOTED	-	2160211	TWS	TWS	MDW	LES

D-2

FILE NO. 218-54

SHEET 8 OF 9

C:\Users\schmidt1\appdata\local\temp\AcPublish_18936\2016 WM REP_Details.dwg

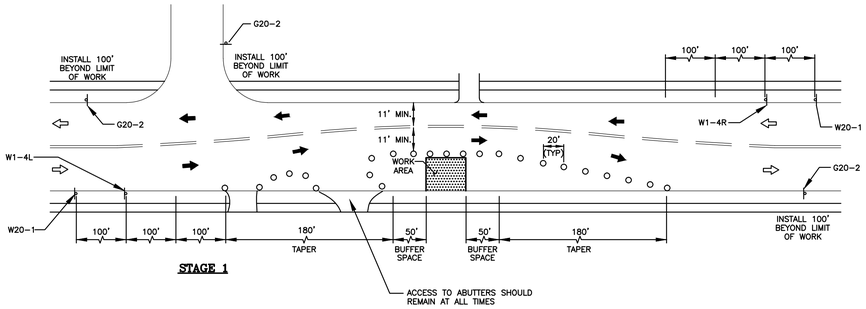

STAGE 1

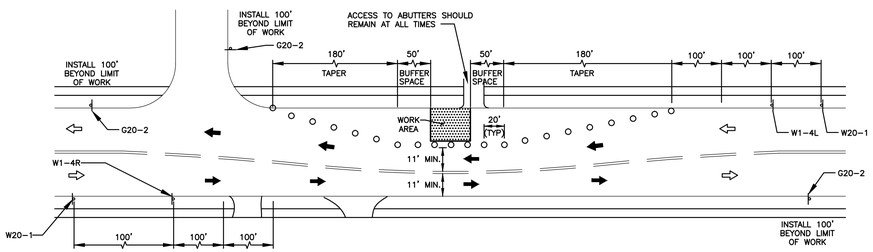

STAGE 2

TRAFFIC OPERATION STAGES
N.T.S.

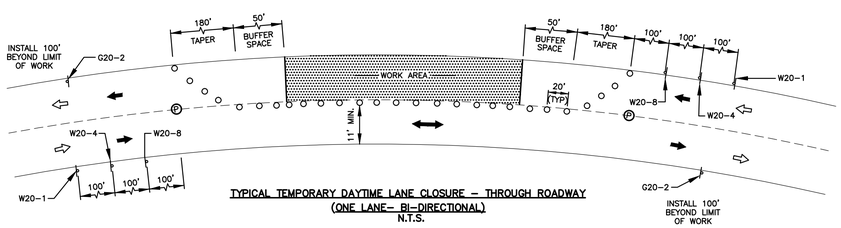

TYPICAL TEMPORARY DAYTIME LANE CLOSURE – THROUGH ROADWAY
(ONE LANE– BI-DIRECTIONAL)
N.T.S.

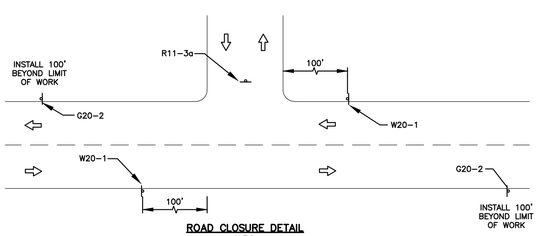

ROAD CLOSURE DETAIL
N.T.S.

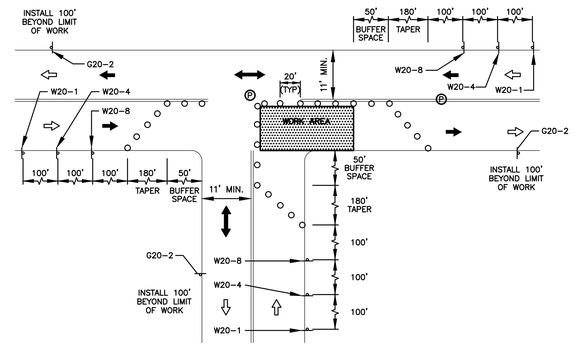

"T" INTERSECTION LANE CLOSURE (2 LANE ROAD)
N.T.S.

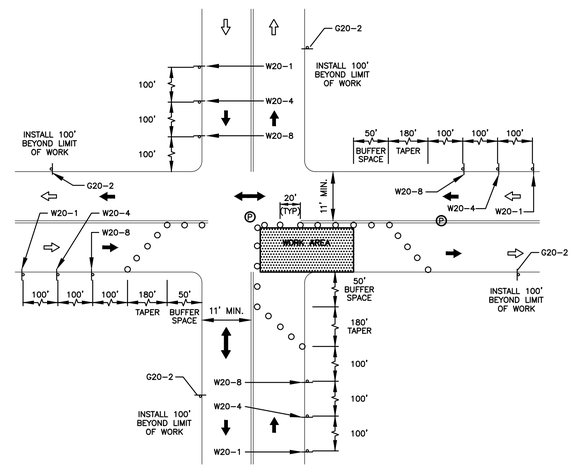

CLOSURE AT SIDE OF INTERSECTION
N.T.S.

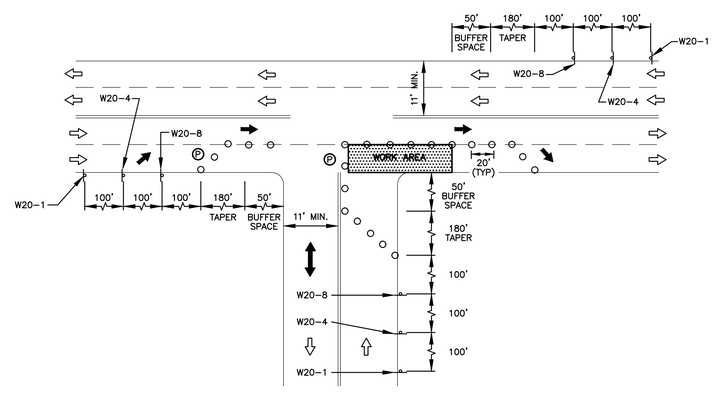

"T" INTERSECTION LANE CLOSURE (4 LANE ROAD)
N.T.S.

TEMPORARY TRAFFIC SIGN SUMMARY

MUTCD CODE	SIZE OF SIGN		SIGN
	WIDTH	HEIGHT	
W1-4L	30"	30"	
W1-4R	30"	30"	
W5-1	36"	36"	ROAD MARKING
W20-1	36"	36"	ROAD WORK AHEAD
W20-4	36"	36"	THE LANE ROAD AHEAD
W20-8	36"	36"	POLICE OFFICER AHEAD
G20-2	36"	18"	END ROADWORK
R11-3a	60"	30"	ROAD CLOSED 10 MILES AHEAD LOCAL TRAFFIC ONLY

NOTE:

1. FOR THE LATEST SPECIFICATION ON TEXT DIMENSIONS AND COLOR, CONTRACTOR SHALL REFER TO THE MANUAL ON UNIFORM TRAFFIC CONTROL DEVICES (CURRENT EDITION).

LEGEND:

- REFLECTORIZED DRUM
- TRAFFIC FLOW DURING CONSTRUCTION
- NORMAL TRAFFIC FLOW
- POLICE DETAIL OFFICER
- CONSTRUCTION SIGN
- WORK AREA

GENERAL NOTES:

1. PLACEMENT OF ALL CONSTRUCTION SIGNS, DRUMS, BARRICADES, TRAFFIC DEVICES AND THE SHAPE, SIZE & COLOR OF ALL TEMPORARY TRAFFIC SIGNS SHALL CONFORM WITH THE LATEST EDITION OF THE MANUAL ON UNIFORM TRAFFIC CONTROL DEVICES.
2. ADVANCE WARNING SIGN PLACEMENT AND TAPER LENGTH TO BE ADJUSTED ACCORDING TO STREET CONDITIONS AND DRIVEWAY OPENINGS.
3. ALL DRUMS SHALL BE APPROXIMATELY PLACED AND MOVED AS NECESSARY TO MAINTAIN ADEQUATE ABUTTER ACCESS AT ALL TIMES.
4. THE CONTRACTOR SHALL NOTIFY EACH ABUTTER AT LEAST 24 HOURS IN ADVANCE OF THE START OF ANY WORK THAT WILL REQUIRE THE TEMPORARY CLOSURE OF ACCESS, SUCH AS EXISTING PAVEMENT EXCAVATION, TEMPORARY DRIVEWAY PAVEMENT PLACEMENT AND SIMILAR OPERATIONS.
5. NONESSENTIAL TRAFFIC CONTROL DEVICES SHALL BE COVERED OR REMOVED DURING NON–WORKING HOURS.
6. PEDESTRIANS SHALL BE PROVIDED WITH ACCESS AND SAFE PASSAGE THROUGH THE TEMPORARY TRAFFIC CONTROL ZONE AT ALL TIMES AND IN ACCORDANCE WITH ADA/AAB STANDARDS.
7. W20–8 SHALL BE TAKEN DOWN OR COVERED AFTER EACH WORKING DAY OR WHEN OTHERWISE NOT APPLICABLE, OR WHEN POLICE OFFICERS ARE NOT PRESENT TO DIRECT TRAFFIC.
8. ALL STREET EXCAVATIONS SHALL BE COMPLETELY CLOSED AT THE END OF EACH WORKING DAY BY BACKFILLING. COVERING WITH STEEL PLATES MAY BE ALLOWED IF APPROVED BY THE ENGINEER.
9. SAMPLE TRAFFIC PLANS INCLUDED ON THIS PLAN SHEET ARE BASED ON AN URBAN (LOW SPEED) ROAD TYPE FROM THE LATEST EDITION OF THE MANUAL ON UNIFORM TRAFFIC CONTROL DEVICES.
10. THE CONTRACTOR SHALL SUBMIT ANY REVISIONS TO THE CONSTRUCTION ZONE SAFETY PLAN TO THE ENGINEER FOR APPROVAL.
11. THIS CONSTRUCTION ZONE SAFETY PLAN SHALL NOT RELIEVE THE CONTRACTOR OF HIS SOLE RESPONSIBILITY FOR CONSTRUCTION SITE SAFETY.
12. CONTRACTOR REQUIRED TO OBTAIN HIS WORK STAGING AREA AT HIS EXPENSE. NO STAGING OF MATERIALS AND EQUIPMENT (EXCEPTION OF TRACK EXCAVATOR) WILL BE ALLOWED WITHIN THE RIGHT–OF–WAY WITHOUT CONSENT FROM THE OWNER.
13. WORK ON SEA STREET WILL BE REQUIRED TO BE PERFORMED BETWEEN HOURS OF 9:00A.M.–4:00P.M.
14. TRAILER–MOUNTED CHANGEABLE MESSAGE SIGNS SHALL BE USED IN ACCORDANCE WITH THE SPECIFICATIONS, AND AT THE DIRECTION OF THE ENGINEER.

COPYRIGHT 2016 WESTON & SAMPSON

Weston&Sampson®
100 Foxborough Blvd., S.250, Foxborough, MA
(508) 698–3034 (800) SAMPSON
www.westonandsampson.com

No.	Date	Dr.By	Ck.By	App.By	Description
		A P P R O V E D			

7-8-16
DATE

REGISTERED PROFESSIONAL ENGINEER

COMMONWEALTH OF MASSACHUSETTS LEAH E. STANTON No. 45778 REGISTERED PROFESSIONAL ENGINEER

CITY OF QUINCY, MASSACHUSETTS
DEPARTMENT OF PUBLIC WORKS

ELM AVENUE AND SEA STREET WATER MAIN REPLACEMENTS

CONSTRUCTION ZONE SAFETY PLAN

CADD NO.	SCALE:	CONTRACT:	JOB NO.	DR.BY	DSN.BY	CHK.BY	APP.BY
2016 WM REP	NOTED	–	2160211	TWS	TWS	MDW	LES

CS-1

FILE NO. 218–53

SHEET 9 OF 9

C:\Users\schmidt1\appdata\local\temp\AcPublish_18936\2016 WM REP.dwg