SITE PREPARATION & EROSION CONTROL NOTES

1. CONTRACTOR SHALL CLEAR THE PERIMETER OF THE CONSTRUCTION AREA AND PLACE EROSION CONTROL MEASURES PRIOR TO COMMENCING WORK. EROSION CONTROL DEVICES TO BE MAINTAINED BY THE CONTRACTOR UNTIL GROUND COVER HAS BEEN ESTABLISHED. CRUSHED STONE STABILIZATION PAD TO BE PLACED AT THE CONSTRUCTION ENTRANCE. IF BUILDING AND SITE WORK TO BE PHASED, CLEARING LIMITS SHOULD NOT EXCEED AREA NECESSARY TO CONSTRUCT EACH PHASE OF CONSTRUCTION.

2. AS EARTHWORK IS IN PROGRESS EROSION CONTROL DEVICES SHALL BE INSTALLED AS SLOPES ARE DISTURBED OR CREATED. SLOPES SHALL BE STABILIZED AS SOON AS WORK ON THEM IS COMPLETED. SLOPES AT 3:1 OR GREATER SHALL BE TRACKED AND SEEDED. SLOPES SHALL BE SEEDED AS SOON AS POSSIBLE AFTER COMPLETION OF WORK.

3. IN AREAS WHERE SOIL DISTURBANCE ACTIVITY HAS BEEN TEMPORARILY OR PERMANENTLY CEASED, TEMPORARY OR PERMANENT SOIL STABILIZATION MEASURES SHALL BE INSTALLED AND/OR IMPLEMENTED WITHIN 7 DAYS FROM THE DATE THE SOIL DISTURBANCE ACTIVITY CEASED.

4. UPON COMPLETION OF THE EARTHWORK, THE CONTRACTOR SHALL PROCEED WITH THE INSTALLATION OF ALL UNDERGROUND UTILITIES AND PLACE SILT SACKS IN NEW INLETS AS SHOWN ON THE PLANS. THE CONTRACTOR SHALL NOTIFY THE APPROPRIATE AGENCY PRIOR TO MAKING CONNECTION OR ALTERING ANY EXISTING UTILITIES.

5. DURING CONSTRUCTION, THE CONTRACTOR WILL BE RESPONSIBLE FOR REPLACING ANY SILT FENCING, CHECK DAMS OR CATCH BASIN/YARD INLET PROTECTIONS WHICH BECOME CLOGGED, INOPERABLE OR DAMAGED. SILT FENCE SHALL BE INSPECTED AFTER RAINFALL EVENTS. ALL EROSION AND SILTATION CONTROLS INCLUDING SILT FENCING, CHECK DAMS, INLET PROTECTION AND DESILTATION SINKS WILL BE INSPECTED AFTER A STORM EVENT AND REQUIRED REPAIRS WILL BE MADE IMMEDIATELY.

6. CRUSHED STONE PAD SHALL BE INSTALLED AT CONSTRUCTION ENTRANCE TO PROVIDE A STABILIZED ENTRANCE POINT. (SEE DETAIL)

7. ANY SILT OR SEDIMENT ACCUMULATED IN EXISTING SWALES, STORM SEWERS, STREET AND/ OR GUTTERS SHALL BE CLEANED OUT DURING CONSTRUCTION.

GENERAL NOTES

1. TOPOGRAPHIC DATA, PROPERTY LINE INFORMATION, AND EXISTING SITE FEATURES WERE OBTAINED FROM A PLAN PREPARED BY NEPONSET VALLEY SURVEY ASSOC., INC..

2. THE CONTRACTOR SHALL COMPLY WITH MASSACHUSETTS GENERAL LAWS CHAPTER 82, SECTION 40, AS AMENDED, WHICH STATES THAT NO ONE MAY EXCAVATE IN THE COMMONWEALTH OF MASSACHUSETTS EXCEPT IN AN EMERGENCY WITHOUT 72 HOURS NOTICE, EXCLUSIVE OF SATURDAYS, SUNDAYS, AND LEGAL HOLIDAYS, TO NATURAL GAS PIPELINE COMPANIES, AND MUNICIPAL UTILITY DEPARTMENTS THAT SUPPLY GAS, ELECTRICITY, TELEPHONE, OR CABLE TELEVISION SERVICE IN OR TO THE CITY OR TOWN WHERE THE EXCAVATION IS TO BE MADE. THE CONTRACTOR SHALL CALL "DIG SAFE" AT 1-888-DIG-SAFE.

3. ALL UTILITY CONNECTIONS ARE SUBJECT TO THE APPROVAL OF, AND GRANTING OF PERMITS BY, THE CITY OF QUINCY. IT SHALL BE THE RESPONSIBILITY OF THE GENERAL CONTRACTOR TO SEE THAT ALL PERMITS AND APPROVALS ARE OBTAINED BEFORE STARTING CONSTRUCTION. THE CONTRACTOR SHALL BE SOLELY RESPONSIBLE FOR MAKING ALL NECESSARY ARRANGEMENTS FOR AND FOR PERFORMING ANY NECESSARY WORK INVOLVED IN CONNECTION WITH THE DISCONTINUANCE OF ANY UTILITIES OR WITHIN THE JURISDICTION OF ANY UTILITY COMPANIES, SUCH AS ELECTRICITY, TELEPHONE, WATER, GAS, AND ANY SYSTEM OR SYSTEMS WHICH WILL BE AFFECTED BY THE WORK TO BE PERFORMED UNDER THIS CONTRACT. THE CONTRACTOR SHALL NOTIFY ALL APPROPRIATE AGENCIES, DEPARTMENTS, AND UTILITY COMPANIES, IN WRITING, AT LEAST 48 HOURS AND NOT MORE THAN 30 DAYS PRIOR TO ANY CONSTRUCTION. CONSTRUCTION SHALL NOT INTERFERE WITH OR INTERRUPT UTILITIES WHICH ARE TO REMAIN IN OPERATION.

4. THE CONTRACTOR SHALL COMPLY WITH ALL APPLICABLE FEDERAL, STATE, AND LOCAL LAWS, RULES, REGULATIONS AND SAFETY CODES IN THE CONSTRUCTION OF ALL IMPROVEMENTS.

5. THE CONTRACTOR SHALL TAKE ADEQUATE PRECAUTIONS TO PROTECT ALL WALKS, GRADING, SIDEWALKS AND SITE DETAILS OUTSIDE OF THE LIMITS OF REGRADING AND WORK AS SHOWN ON THE DRAWINGS AND SHALL REPAIR AND REPLACE OR OTHERWISE MAKE GOOD AS DIRECTED BY THE ENGINEER OR OWNER'S DESIGNATED REPRESENTATIVE ANY SUCH OR OTHER DAMAGE SO CAUSED. CONTRACTOR SHALL ENSURE ADEQUATE ACCESS TO NEWBURY STREET RIGHT OF WAY AND ACCESS POINTS FOR ABUTTERS AT ALL TIMES DURING CONSTRUCTION.

6. THE CONTRACTOR SHALL REMOVE FROM THE SITE ALL RUBBISH AND DEBRIS FOUND THEREON. STORAGE OF SUCH MATERIALS ON THE PROJECT SITE WILL NOT BE PERMITTED. THE CONTRACTOR SHALL LEAVE THE SITE IN SAFE, CLEAN, AND LEVEL CONDITION UPON COMPLETION OF THE SITE CLEARANCE WORK.

7. THE CONTRACTOR SHALL REMOVE FROM THE AREA OF CONSTRUCTION PAVEMENT, CONCRETE, GRANITE CURBING, CEMENT CURBING, POLES AND FOUNDATIONS, ISLANDS, TREE BERMS AND OTHER FEATURES WITHIN THE LIMITS OF CONSTRUCTION AS REQUIRED TO ACCOMMODATE NEW CONSTRUCTION WHETHER SPECIFIED ON THE DRAWINGS OR NOT.

8. FOR SITE MATERIALS, PLANTING MATERIALS AND LOAM, GROUND COVER, AND DETAILS SEE LANDSCAPE ARCHITECT'S DRAWINGS AND SPECIFICATIONS.

9. ALL WATER, SEWER, AND DRAIN WORK SHALL BE PERFORMED ACCORDING TO THE REQUIREMENTS AND STANDARD SPECIFICATIONS OF THE CITY OF QUINCY.

10. ELEVATIONS REFER TO CITY OF QUINCY DATUM.

11. GAS, TELEPHONE, ELECTRIC, AND CABLE SERVICES ARE TO BE DESIGNED BY EACH UTILITY COMPANY IN COORDINATION WITH THE MECHANICAL, ELECTRIC AND PLUMBING CONSULTANTS. THE CONTRACTOR SHALL COORDINATE CONSTRUCTION ACTIVITIES AND DESIGN OF NEW UTILITIES WITH ELECTRIC, CABLE TELEVISION AND TELECOMMUNICATION UTILITIES.

12. UTILITY STRUCTURES TO BE ABANDONED SHALL BE REMOVED TO A DEPTH OF NO LESS THAN 3 FEET BELOW FINISHED GRADE, THE BOTTOMS OF THE STRUCTURES SHALL BE BROKEN AND THE STRUCTURES SHALL BE BACKFILLED WITH GRAVEL BORROW AND COMPACTED.

13. CONTRACTOR SHALL MAINTAIN ALL EXISTING UTILITIES EXCEPT THOSE NOTED TO BE ABANDONED OR REMOVED & DISPOSED.

14. THE GENERAL CONTRACTOR IS RESPONSIBLE FOR TRENCHING, BACKFILLING, AND SURFACE RESTORATION FOR THE GAS LINE INSTALLATION.

15. ALL GRATES IN WALKWAYS SHALL BE ADA COMPLIANT.

LEGEND

DMH	PROPOSED DRAIN MANHOLE
CB	PROPOSED STORMCEPTOR INLET
SMH	PROPOSED SEWER MANHOLE
WG	PROPOSED GATE VALVE
CO	PROPOSED CLEANOUT
IP	PROPOSED INSPECTION PORT
—W—	PROPOSED WATER LINE
—D—	PROPOSED DRAIN LINE
—S—	PROPOSED SEWER LINE
—E—	PROPOSED ELECTRIC LINE
—G—	PROPOSED GAS LINE
90.0 ×	PROPOSED SPOT GRADE
—85—	EXISTING CONTOUR
—85—	PROPOSED CONTOUR
VIF	VERIFY IN FIELD
IP	INSPECTION PORT
LP	LIGHT POLE
LB	LIGHT BOLLARD
// //	LINE TO BE ABANDONED
RCP	REINFORCED CONCRETE PIPE
PVC	POLYVINYL CHLORIDE PIPE
DI	CLASS 52 CEMENT LINED DUCTILE IRON
LF	LINEAR FEET
INV.	INVERT
TYP.	TYPICAL
CONC.	CONCRETE
BIT. CONC.	BITUMINOUS CONCRETE
RD	ROOF DRAIN
SS	SANITARY SEWER

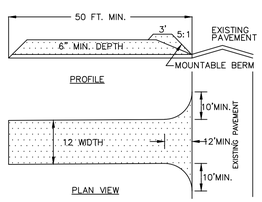

1. STONE SIZE – USE 2-1/2" STONE
2. THICKNESS – NOT LESS THAN 6 (SIX) INCHES.
3. WIDTH – FULL ENTRANCE WIDTH
4. USE FILTER FABRIC UNDER STONE FOR ENTRANCE STABILITY.
5. MAINTENANCE – THE CONTRACTOR SHALL MAINTAIN THE ENTRANCE IN A CONDITION WHICH WILL PREVENT TRACKING OR SEDIMENT FLOW ONTO A PUBLIC ROADWAY.
6. WHEN ROADWAY WASHING IS REQUIRED, IT SHALL BE DONE IN A MANNER THAT DIRECTS SEDIMENT RUNOFF TOWARDS EROSION CONTROL DEVICES. INSTALL ADDITIONAL EROSION CONTROLS, IF NEEDED.
7. PERIODIC INSPECTION AND MAINTENANCE SHALL BE PROVIDED AFTER EACH RAINSTORM.

STABILIZED CONSTRUCTION ENTRANCE DETAILS

NOT TO SCALE

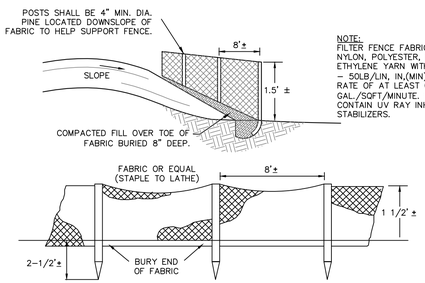

NOTE:
FILTER FENCE FABRIC SHALL BE OF NYLON, POLYESTER, PROPYLENE, OR ETHYLENE YARN WITH EXTRA STRENGTH – 50LB/LIN. IN.(MIN), WITH A FLOW RATE OF AT LEAST 0.3 GAL./SQFT/MINUTE. FABRIC SHOULD CONTAIN UV RAY INHIBITORS AND STABILIZERS.

SILT FENCE DETAIL

NOT TO SCALE

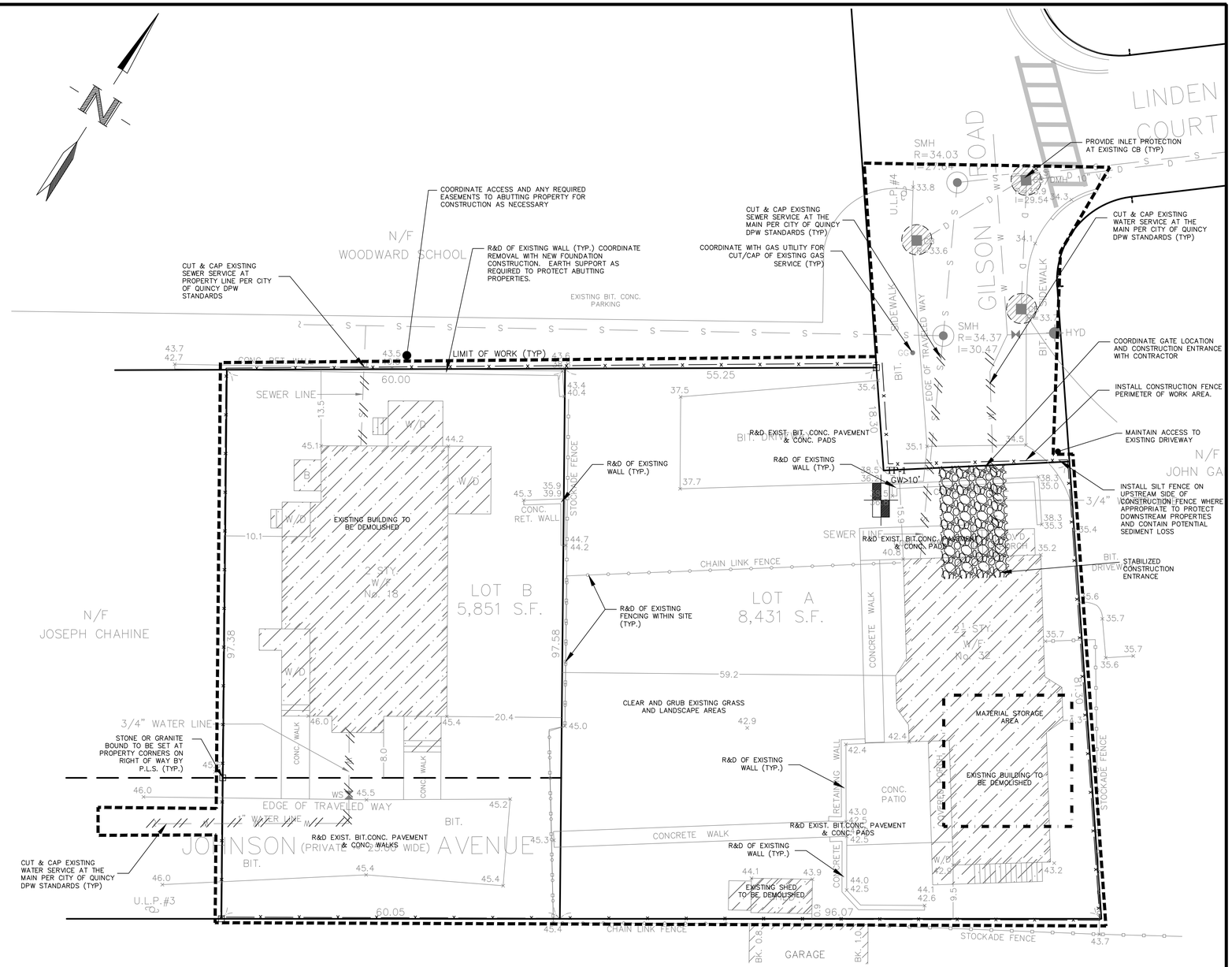

JOYCE CONSULTING GROUP, INC.
100 WYMAN ROAD
BRAINTREE, MA 02184

781-817-6120
hello@joycecg.com

"Copyright 2015" Joyce Consulting Group, Inc. All rights reserved unauthorized duplication is a violation of all applicable laws.

LEGEND

—W—	EX. WATER	WV	WATER VALVE
—S—	EX. SEWER		HYDRANT
—D—	EX. DRAIN	SMH	SEWER MANHOLE
—E—	EX. ELECT	TMH	TELEPHONE MANHOLE
—T—	EX. TEL	CB	EX. CATCH BASIN
—G—	EX. GAS	HH	EX. HANDHOLE
LP	LIGHT POLE	UP	UTILITY POLE
DMH	DRAIN MANHOLE	GV	GAS VALVE
EMH	ELECTRIC MANHOLE		
VGC	VERTICAL GRANITE CURB		
FGC	FLUSH GRANITE CURB		
CRTW	CONCRETE RETAINING WALL		

SCALE 1"=10'	JOB NO. JCG 15-045
DATE 10-07-15	TAX MAP NO. N/A

REVISIONS

DATE	REVISION	BY
12-09-15	PEER & DPW REVIEW COMMENTS	MGJ
01-25-16	PEER & DPW REVIEW COMMENTS	MGJ

PLAN TITLE:
SITE PREPARATION AND DEMO PLAN
32 GILSON ROAD
QUINCY, MASSACHUSETTS

PREPARED FOR:
PETER & DAVID MURPHY
18 JOHNSON AVENUE
QUINCY, MASSACHUSETTS

C-0

SHEET 1 OF 5

LEGEND

DMH	PROPOSED DRAIN MANHOLE
CB	PROPOSED STORMCEPTOR INLET
SMH	PROPOSED SEWER MANHOLE
WG	PROPOSED GATE VALVE
CO	PROPOSED CLEANOUT
IP	PROPOSED INSPECTION PORT
—W—	PROPOSED WATER LINE
—D—	PROPOSED DRAIN LINE
—S—	PROPOSED SEWER LINE
—E—	PROPOSED ELECTRIC LINE
—G—	PROPOSED GAS LINE
90.0 ×	PROPOSED SPOT GRADE
—85—	EXISTING CONTOUR
—85—	PROPOSED CONTOUR
VIF	VERIFY IN FIELD
IP	INSPECTION PORT
LP	LIGHT POLE
LB	LIGHT BOLLARD
// //	LINE TO BE ABANDONED
RCP	REINFORCED CONCRETE PIPE
PVC	POLYVINYL CHLORIDE PIPE
DI	CLASS 52 CEMENT LINED DUCTILE IRON
LF	LINEAR FEET
INV.	INVERT
TYP.	TYPICAL
CONC.	CONCRETE
BIT. CONC.	BITUMINOUS CONCRETE
RD	ROOF DRAIN
SS	SANITARY SEWER

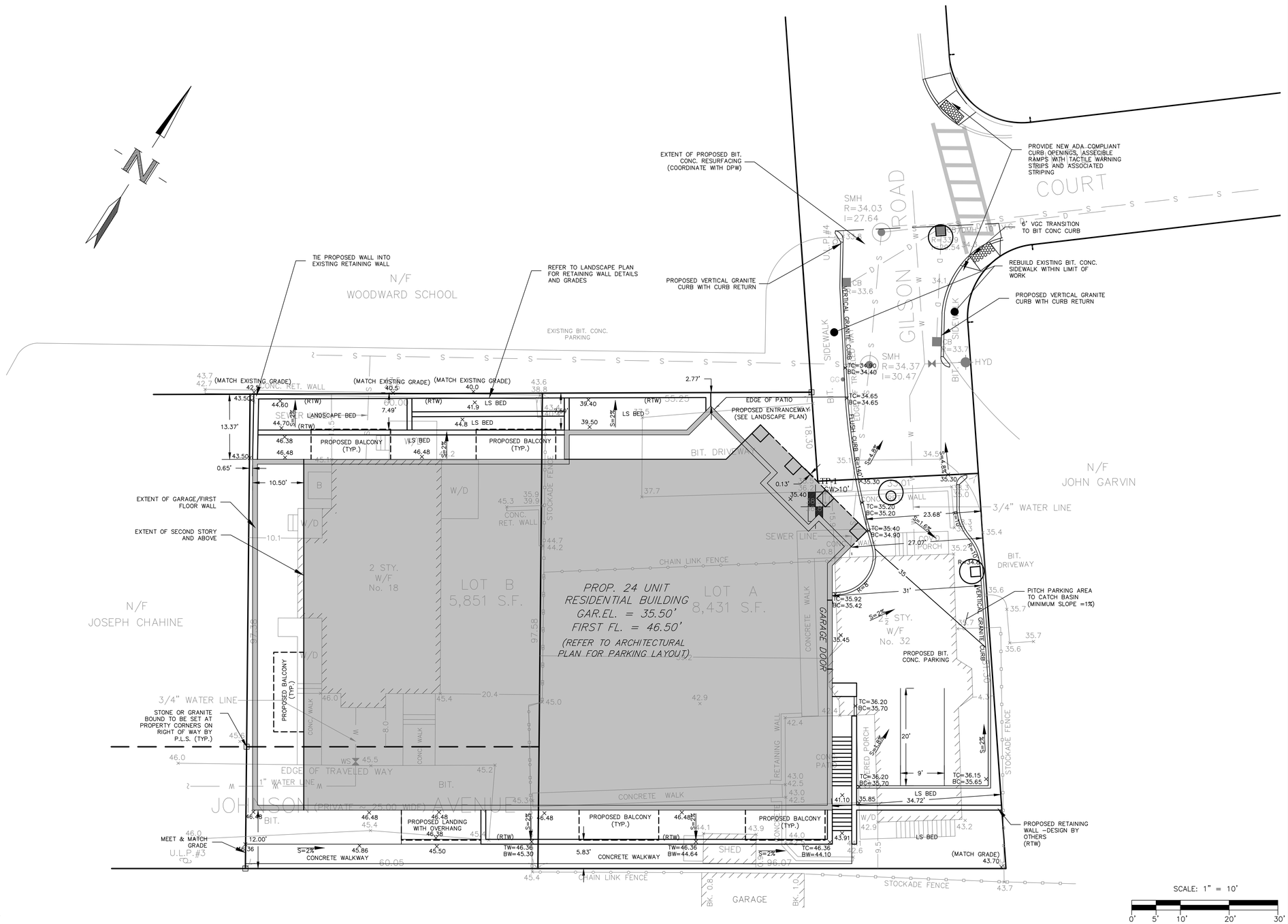

GENERAL GRADING NOTES

1. ALL PAVED AREAS MUST PITCH TO DRAIN AT A MINIMUM OF ONE–EIGHTH INCH (1/8") PER FOOT.
2. WHERE NEW PAVING MEETS EXISTING PAVING, MEET LINE AND GRADE OF EXISTING.
3. UNDERGROUND UTILITIES SHOWN AS APPROXIMATE ONLY.
4. PROVIDE POSITIVE DRAINAGE AWAY FROM FACE OF BUILDINGS AT ALL LOCATIONS.
5. ALL PROPOSED TOP OF CURB ELEVATIONS ARE SIX INCHES (6") ABOVE BOTTOM OF CURB ELEVATIONS UNLESS SHOWN OTHERWISE.
6. THE GENERAL CONTRACTOR SHALL BLEND NEW EARTHWORK SMOOTHLY INTO EXISTING EARTHWORK.
7. ALL POINTS OF CONSTRUCTION EGRESS AND/OR INGRESS SHALL BE MAINTAINED TO PREVENT TRACKING OR FLOWING OF SEDIMENT ONTO PUBLIC ROADS.
8. THE CONTRACTOR SHALL VERIFY ALL EXISTING GRADES IN THE FIELD AND REPORT ANY DISCREPANCIES IMMEDIATELY TO THE ARCHITECT/ENGINEER PRIOR TO STARTING WORK.
9. ANY ALTERATIONS TO THESE DRAWINGS MADE IN THE FIELD DURING CONSTRUCTION SHALL BE RECORDED BY THE GENERAL CONTRACTOR AND SHARED WITH THE ARCHITECT AND ENGINEER AS REQUIRED.
10. SURPLUS MATERIALS SHALL NOT BE REMOVED FROM THE SITE UNLESS DIRECTED BY THE OWNER OR OWNER'S REPRESENTATIVE.
11. ANY AREAS OUTSIDE OF THE LIMIT–OF–WORK THAT IS DISTURBED SHALL BE RESTORED TO ITS ORIGINAL CONDITION AT NO COST TO THE OWNER.
12. FURNISH AND INSTALL 3" OF SCREENED LOAM AND HYDROSEED IN ALL DISTURBED AREAS.

ADA & MAAB CERTIFICATION:

THE PROPOSED SITE PLAN HAS BEEN PREPARED IN COMPLIANCE WITH THE PROVISIONS OF THE ADA AND MAAB

COMMONWEALTH OF MASSACHUSETTS
JOYCE CONSULTING GROUP, INC.
No. 47855
REGISTERED PROFESSIONAL ENGINEER
01-25-16

JOYCE CONSULTING GROUP, INC.
100 WYMAN ROAD
BRAINTREE, MA 02184

781-817-6120
hello@joycecg.com

"Copyright 2015" Joyce Consulting Group, Inc. All rights reserved unauthorized duplication is a violation of all applicable laws.

LEGEND

—W—	EX. WATER	WV	WATER VALVE
—S—	EX. SEWER		HYDRANT
—D—	EX. DRAIN	SMH	SEWER MANHOLE
—E—	EX. ELECT	TMH	TELEPHONE MANHOLE
—T—	EX. TEL	CB	EX. CATCH BASIN
—G—	EX. GAS	HH	EX. HANDHOLE
LP	LIGHT POLE	UP	UTILITY POLE
DMH	DRAIN MANHOLE	GV	GAS VALVE
EMH	ELECTRIC MANHOLE		
VGC	VERTICAL GRANITE CURB		
FGC	FLUSH GRANITE CURB		
CRTW	CONCRETE RETAINING WALL		

SCALE	1"=10'	JOB NO.	JCG 15–045
DATE	10–07–15	TAX MAP NO.	N/A

REVISIONS

DATE	REVISION	BY
12–09–15	PEER & DPW REVIEW COMMENTS	MGJ
01–25–16	PEER & DPW REVIEW COMMENTS	MGJ

PLAN TITLE:

SITE GRADING AND LAYOUT PLAN
32 GILSON ROAD
QUINCY, MASSACHUSETTS

PREPARED FOR:

PETER & DAVID MURPHY
18 JOHNSON AVENUE
QUINCY, MASSACHUSETTS

C-1

SHEET 2 OF 5

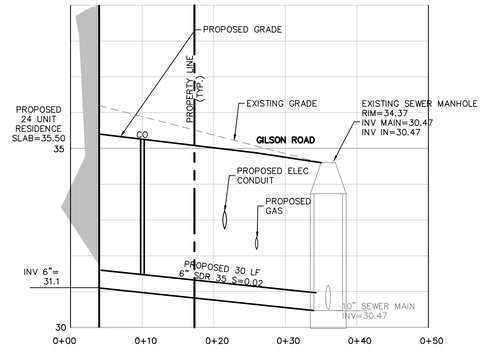

SEWER CONNECTION PROFILE

HORIZONTAL SCALE: 1"=10'
VERTICAL SCALE: 1"=2'

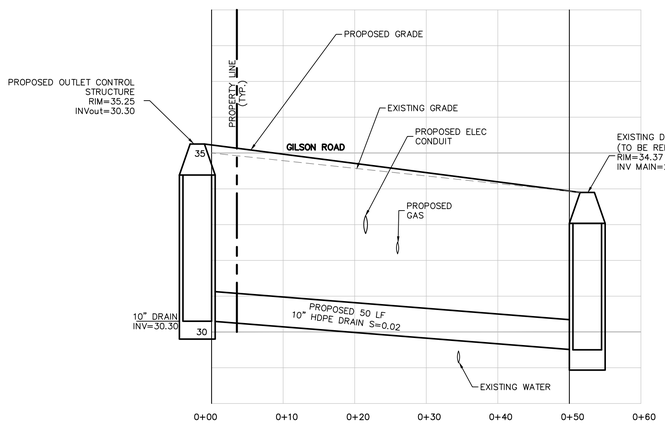

DRAIN CONNECTION PROFILE

HORIZONTAL SCALE: 1"=10'
VERTICAL SCALE: 1"=2'

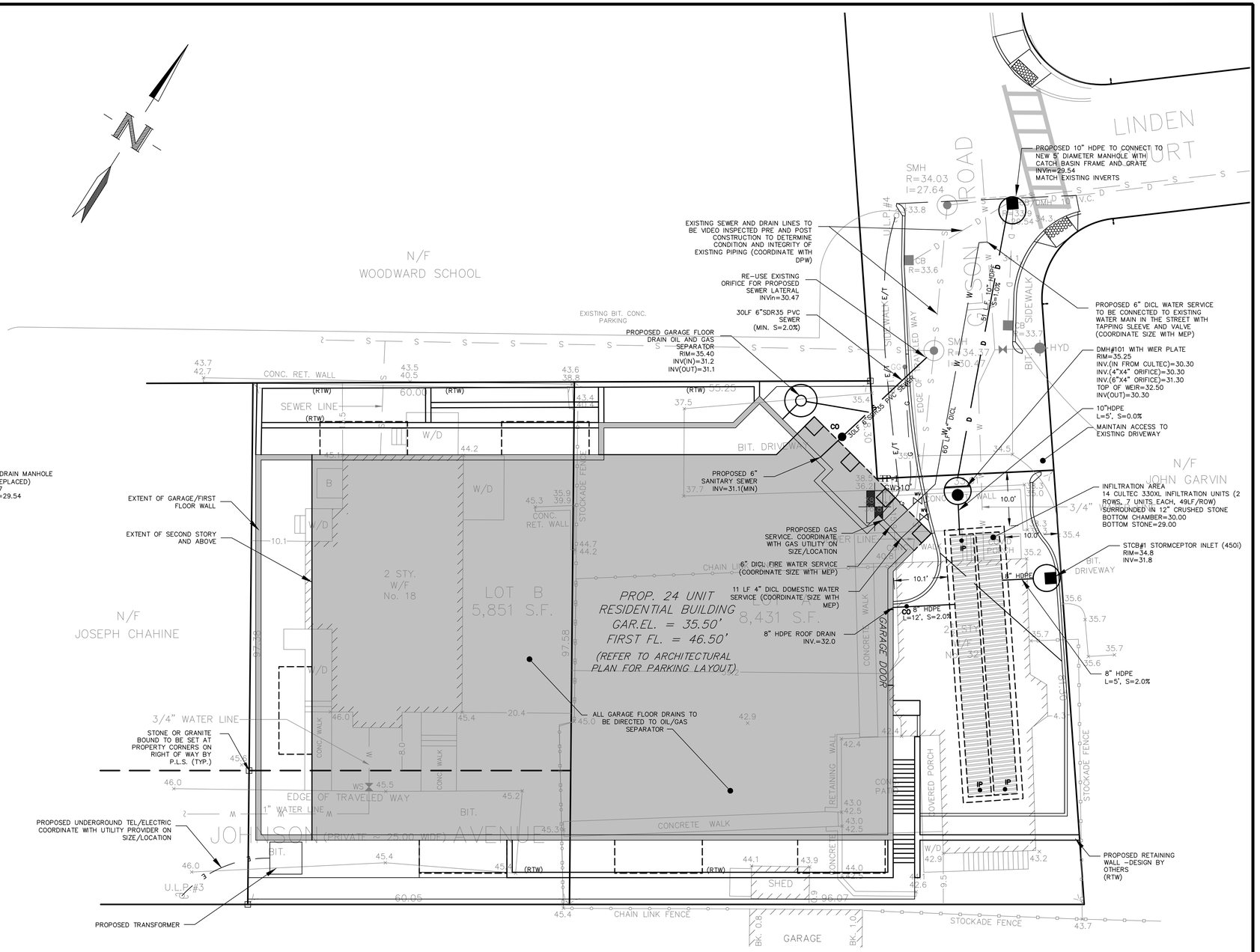

LEGEND

DMH	PROPOSED DRAIN MANHOLE
CB	PROPOSED STORMCEPTOR INLET
SMH	PROPOSED SEWER MANHOLE
WG	PROPOSED GATE VALVE
CO	PROPOSED CLEANOUT
IP	PROPOSED INSPECTION PORT
W	PROPOSED WATER LINE
D	PROPOSED DRAIN LINE
S	PROPOSED SEWER LINE
E	PROPOSED ELECTRIC LINE
G	PROPOSED GAS LINE
90.0 ×	PROPOSED SPOT GRADE
85	EXISTING CONTOUR
85	PROPOSED CONTOUR
VIF	VERIFY IN FIELD
IP	INSPECTION PORT
LP	LIGHT POLE
LB	LIGHT BOLLARD
// //	LINE TO BE ABANDONED
RCP	REINFORCED CONCRETE PIPE
PVC	POLYVINYL CHLORIDE PIPE
DI	CLASS 52 CEMENT LINED DUCTILE IRON
LF	LINEAR FEET
INV.	INVERT
TYP.	TYPICAL
CONC.	CONCRETE
BIT. CONC.	BITUMINOUS CONCRETE
RD	ROOF DRAIN
SS	SANITARY SEWER

UTILITY CONSTRUCTION NOTES

1. WATER MAIN SHALL BE 6"DICL, CLASS 52 PIPE. ALL WATER MAIN FITTINGS, VALVES AND GATES SHALL MEET THE CITY OF QUINCY WATER DEPARTMENT STANDARDS.
2. MINIMUM COVER OVER THE WATER MAIN AND SERVICES SHALL BE FIVE (5') FEET.
3. SANITARY SEWER GRAVITY PIPE SHALL BE 6" PVC, SDR 35. SANITARY SEWER FORCE MAIN SHALL BE SCH 80 PVC AND SHALL MEET THE CITY OF QUINCY SEWER DEPT. STANDARDS.
4. WATER MAIN BENDS, TEES, AND PLUGS SHALL HAVE A CONCRETE THRUST BLOCKS AS SPECIFIED IN THE DETAIL SHEET.
5. ALL CONSTRUCTIONS TO MEET CITY OF QUINCY STANDARDS.
6. GAS, TELEPHONE, CABLE, ELECTRICITY TO BE DESIGNED BY THE INDIVIDUAL UTILITY COMPANY.
7. MAINTAIN 10 FEET HORIZONTAL SEPARATION BETWEEN SEWER AND WATER LINES. ENCASE BOTH UTILITIES WITH CONCRETE IF 10 FEET SEPARATION CANNOT BE MAINTAINED. WHEREVER THERE IS LESS THAN 10 FEET OF HORIZONTAL SEPARATION AND 18" OF VERTICAL SEPARATION BETWEEN A PROPOSED OR EXISTING SEWER LINE TO REMAIN AND A PROPOSED OR EXISTING WATER LINE TO REMAIN, BOTH UTILITIES SHALL BE ENCASED IN CONCRETE.
9. PROPOSED CLEANOUTS WILL BE CONSTRUCTED OF TWO 22.5 DEGREE ELBOWS AND ONE 45 DEGREE ELBOW.

NOTES:

1. TOPOGRAPHIC DETAIL, NATURAL AND MAN MADE SURFACE FEATURES ARE BASED ON ACTUAL SURVEY BY NEPONSET VALLEY SURVEY ASSOC., INC. ELEVATIONS SHOWN ON THIS PLAN ARE BASED ON THE CITY OF QUINCY DATUM.
2. THE LOCATION OF ALL UNDERGROUND UTILITIES SHOWN ARE APPROXIMATE AND ARE BASED UPON A PARTIAL FIELD SURVEY AND COMPILATION OF PLANS OF RECORD. NVSA, INC., DOES NOT WARRANTY NOR GUARANTEE THE LOCATION OF ALL UTILITIES DEPICTED OR NOT DEPICTED. THE CONTRACTOR SHALL VERIFY THE LOCATION OF ALL UTILITIES BY CONTACTING LOCAL UTILITY DEPARTMENT AND DIG SAFE PRIOR TO COMMENCEMENT OF CONSTRUCTION.

COMMONWEALTH OF MASSACHUSETTS
JOYCE
CHRIS
No. 47855
REGISTERED PROFESSIONAL ENGINEER
01-25-16

JOYCE CONSULTING GROUP, INC.
100 WYMAN ROAD
BRAINTREE, MA 02184
781-817-6120
hello@joycecg.com

"Copyright 2015" Joyce Consulting Group, Inc. All rights reserved unauthorized duplication is a violation of all applicable laws.

LEGEND

W	EX. WATER	WV	WATER VALVE
S	EX. SEWER		HYDRANT
D	EX. DRAIN	SMH	SEWER MANHOLE
E	EX. ELECT	TMH	TELEPHONE MANHOLE
T	EX. TEL	CB	EX. CATCH BASIN
G	EX. GAS	HH	EX. HANDHOLE
LP	LIGHT POLE	UP & GV	UTILITY POLE
DMH	DRAIN MANHOLE		GAS VALVE
EMH	ELECTRIC MANHOLE		
VGC	VERTICAL GRANITE CURB		
FGC	FLUSH GRANITE CURB		
CRTW	CONCRETE RETAINING WALL		

SCALE	1"=10'	JOB NO.	JCG 15-045
DATE	10-07-15	TAX MAP NO.	N/A

REVISIONS

DATE	REVISION	BY
12-09-15	PEER & DPW REVIEW COMMENTS	MGJ
01-25-16	PEER & DPW REVIEW COMMENTS	MGJ

PLAN TITLE:

SITE UTILITY PLAN
32 GILSON ROAD
QUINCY, MASSACHUSETTS

PREPARED FOR:
PETER & DAVID MURPHY
18 JOHNSON AVENUE
QUINCY, MASSACHUSETTS

C-2

SHEET 3 OF 5

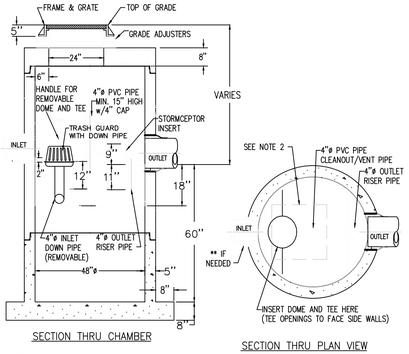

SECTION THRU CHAMBER

SECTION THRU PLAN VIEW

NOTE :

1. THE USE OF FLEXIBLE CONNECTIONS IS RECOMMENDED AT THE OUTLET WHERE APPLICABLE.
2. THE COVER SHOULD BE POSITIONED OVER THE 4"ø CLEANOUT/VENT PIPE AND THE 4"ø INLET DOWN PIPE.
3. THE STORMCEPTOR SYSTEM IS PROTECTED BY ONE OR MORE OFF THE FOLLOWING U.S. PATENTS: #4985148, #5498331, #5725760, #5753115, #5849181.
4. CONTRACTOR TO PROVIDE CRANE TO SET UNIT (HEAVIEST SECTION WEIGHS 5000 LB)
5. STORMCEPTOR TO HAVE SHUT OFF CONTROLS.

STORMCEPTOR INLET (450i)

NOT TO SCALE

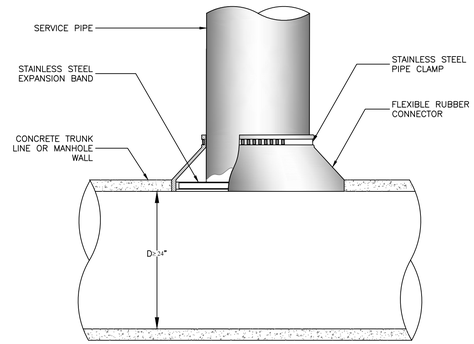

NOTES:

1. OPENING IN CONCRETE WALL SHALL BE CORED USING HIGH SPEED DIAMOND DRILL
2. ALL METAL FIXTURES SHALL BE OF STAINLESS STEEL
3. SERVICE LINE SHALL BE FLUSH WITH THE INSIDE OF THE CONCRETE PIPE OR WALL
4. IF TRUNK LINE DIAMETER IS LESS THAN 24" THEN A SADDLE TYPE CONNECTION WILL BE USED

MANHOLE CONNECTION DETAIL

NOT TO SCALE

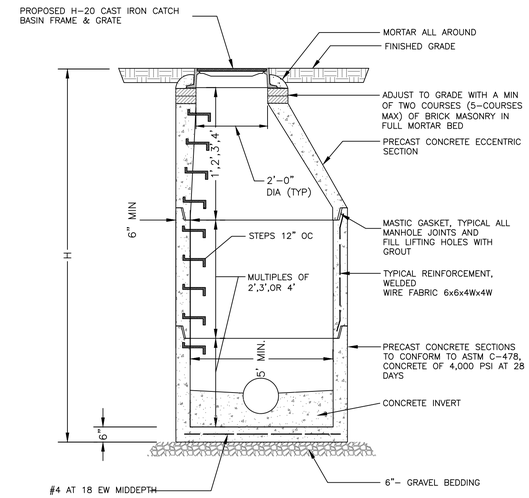

NOTES:

1. FOR MANHOLES WITH DIAMETERS GREATER THAN 4' THE WALL AND BASE THICKNESS SHALL BE PER PRECAST MANUFACTURER'S STANDARD STRUCTURE FOR THE INDICATED DIAMETER. IN ADDITION THE MANUFACTURER'S STANDARD REDUCER SECTION FOR EACH DIAMETER SHALL BE USED WHERE REQUIRED TO MEET 4' DIAMETER ECCENTRIC CONE.
2. PROVIDE RESILIENT CONNECTOR WHERE PIPE ENTERS MANHOLE.
3. DESIGN LIVE LOAD HS20-44.

DRAINAGE MANHOLE DETAIL

NOT TO SCALE

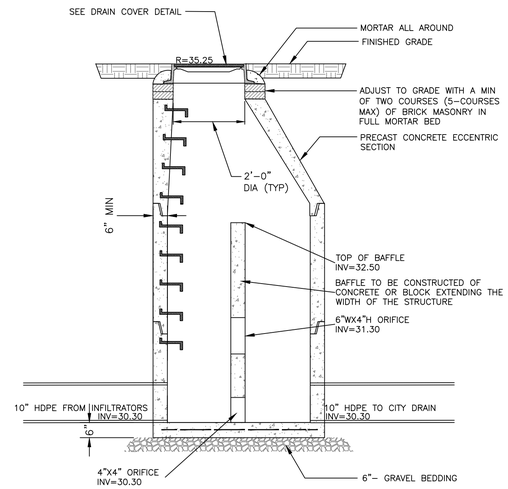

NOTES:

1. FOR MANHOLES WITH DIAMETERS GREATER THAN 4' THE WALL AND BASE THICKNESS SHALL BE PER PRECAST MANUFACTURER'S STANDARD STRUCTURE FOR THE INDICATED DIAMETER. IN ADDITION THE MANUFACTURER'S STANDARD REDUCER SECTION FOR EACH DIAMETER SHALL BE USED WHERE REQUIRED TO MEET 4' DIAMETER ECCENTRIC CONE.
2. PROVIDE RESILIENT CONNECTOR WHERE PIPE ENTERS MANHOLE.
3. DESIGN LIVE LOAD HS20-44.

OUTLET CONTROL STRUCTURE

NOT TO SCALE

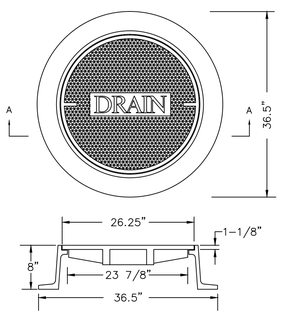

NOTE:

FRAME AND COVER SHALL BE EAST JORDAN IRON WORKS CATALOG NOS. 2110A & 2114Z MARKED "DRAIN", OR APPROVED EQUAL.

SECTION A-A

DRAIN COVER DETAIL

NOT TO SCALE

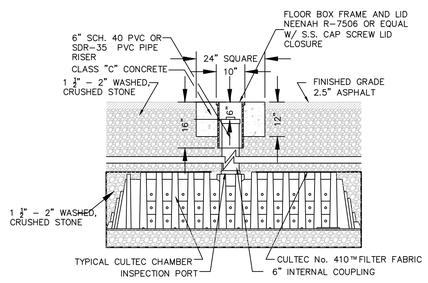

TYPICAL H20 INSPECTION PORT DETAIL

N.T.S.

INLET	D	A	B	INLET	D	A	B
4"	3'-6"ø	3'-0"	2'-6"	8"	5'-0"ø	6'-0"	5'-0"
5"	3'-6"ø	5'-0"	4'-0"		5'-6"x 5'-6"	4'-6"	4'-0"
	3'-6"x 3'-6"	4'-0"	3'-0"		6'-0"ø	4'-0"	3'-6"
	3'-6"x 3'-6"	3'-6"	3'-0"		6'-0"x 6'-0"	3'-0"	2'-6"
	3'-6"x 3'-6"	3'-0"	2'-6"		6'-6"ø	3'-6"	3'-0"
	3'-6"x 3'-6"	3'-0"	2'-6"		6'-6"x 6'-6"	3'-0"	2'-6"
6"	4'-0"ø	5'-0"	4'-6"	10"	5'-6"ø	7'-6"	6'-6"
	4'-0"x 4'-0"	4'-0"	3'-6"		6'-0"x 6'-0"	5'-6"	4'-6"
	4'-6"ø	4'-0"	3'-6"		6'-0"ø	6'-6"	5'-6"
	4'-6"x 4'-6"	3'-6"	3'-0"		6'-6"x 6'-6"	5'-0"	4'-0"
	5'-0"ø	3'-6"	3'-0"				
	5'-0"x 5'-0"	3'-0"	2'-6"				

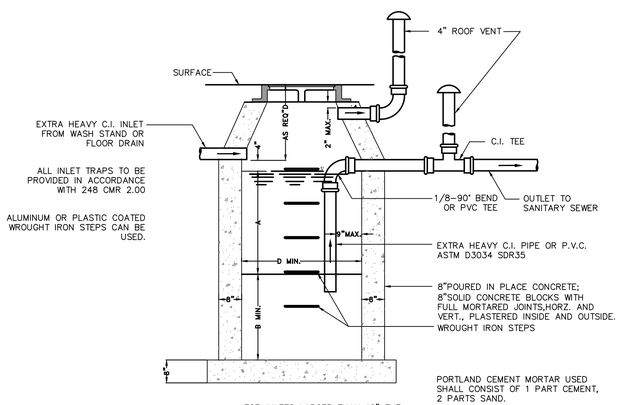

NOTES: FOR INLETS LARGER THAN 10" THE DESIGN AND DIMENSIONS WILL BE DETERMINED FOR EACH PARTICULAR CASE
PRE-CAST SEPARATORS ARE TO HAVE ALL SPECIFIED HOLES EITHER CORE-BORED OR CAST IN PLACE.

OIL WATER SEPARATOR DETAIL (IN GARAGE)

NOT TO SCALE

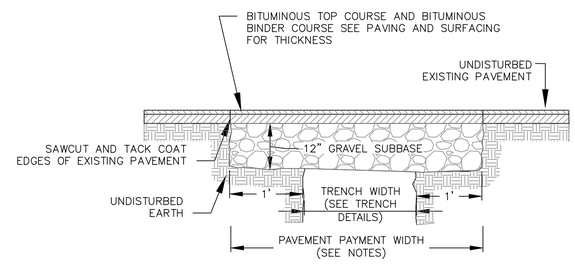

NOTES:

1. PERMANENT TRENCH PAVEMENT PAYMENT WIDTH SHALL BE THE TRENCH PAY LIMIT PLUS 2 FEET
2. TEMPORARY TRENCH PAVEMENT PAYMENT WIDTH SHALL BE EQUAL TO THE TRENCH PAYMENT LIMIT
3. REMOVE AND DISPOSE ALL TEMPORARY PAVEMENT AS REQUIRED. RESTORE AND COMPACT SUBBASE AS REQUIRED PRIOR TO PERMANENT TRENCH PAVEMENT.

TRENCH PAVEMENT DETAIL

NOT TO SCALE

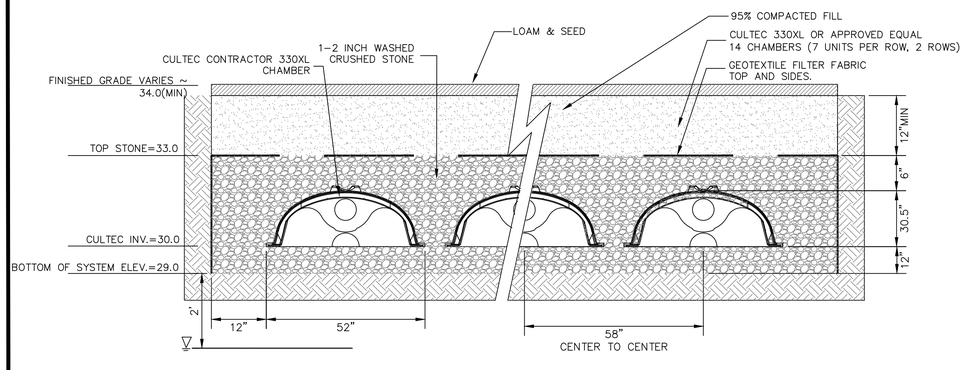

NOTES:

1. THE 330-XL CHAMBERS WILL BE MANUFACTURED BY CULTEC, INC. OF BROOKFIELD, CT (203-775-4416).
2. CONTACT CULTEC, INC. FOR SUBMITTAL PACKAGES AND TO PURCHASE PRODUCT.
3. REFER TO MANUFACTURER FOR RECOMMENDED INSTALLATION GUIDELINES
4. CHAMBERS SHALL BE DESIGNED TO WITHSTAND ASHTO H20 LOAD RATING (32,000 LBS/AXLE) WHEN INSTALLED.
5. UNITS WILL HAVE A RAISED INTEGRAL CAP A THE TOP OF THE ARCH IN THE CENTER OF EACH UNIT TO BE USED AS AN OPTIONAL INSPECTION PORT OR CLEAN-OUT.
6. ALL STONE AGGREGATE USED IN CONSTRUCTION OF THE RECHARGE BASIN SHALL BE 1½" TO 2" NOMINAL DIAMETER AND DOUBLE WASHED. USING CRUSHED STONE IS NOT PERMITTED.

UNDERGROUND DETENTION AREA

NOT TO SCALE

COMMONWEALTH OF MASSACHUSETTS
JOYCE
No. 47855
REGISTERED PROFESSIONAL ENGINEER
01-25-16

JOYCE CONSULTING GROUP, INC.
100 WYMAN ROAD
BRAINTREE, MA 02184

781-817-6120
hello@joycecg.com

"Copyright 2015" Joyce Consulting Group, Inc. All rights reserved unauthorized duplication is a violation of all applicable laws.

SCALE	AS NOTED	JOB NO.	JCG 15-045
DATE	10-07-15	TAX MAP NO.	N/A

REVISIONS

DATE	REVISION	BY
12-09-15	PEER & DPW REVIEW COMMENTS	MGJ
01-25-16	PEER & DPW REVIEW COMMENTS	MGJ

PLAN TITLE:

DETAIL SHEET I
32 GILSON ROAD
QUINCY, MASSACHUSETTS

PREPARED FOR:

PETER & DAVID MURPHY
18 JOHNSON AVENUE
QUINCY, MASSACHUSETTS

C-3

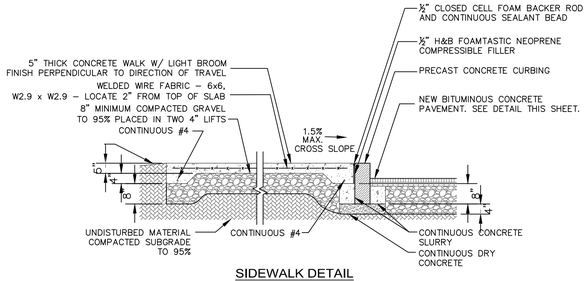

SIDEWALK DETAIL

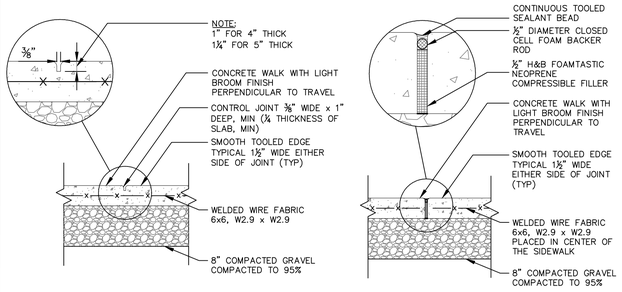

CONTROL JOINT [5'-0" O.C. MAX]

EXPANSION JOINT [20'-0" O.C. MAX]

CONCRETE SIDEWALK DETAIL

NOT TO SCALE

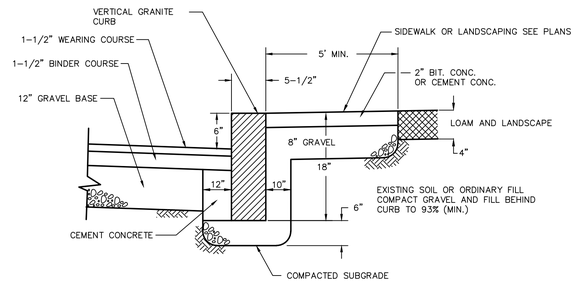

VERTICAL GRANITE CURB DETAIL

NOT TO SCALE

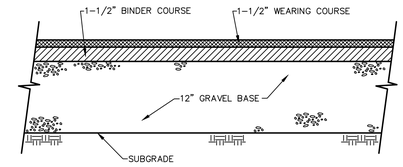

PAVEMENT SECTION DETAIL

NOT TO SCALE

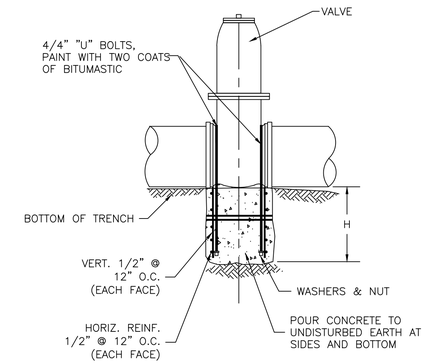

ELEVATION

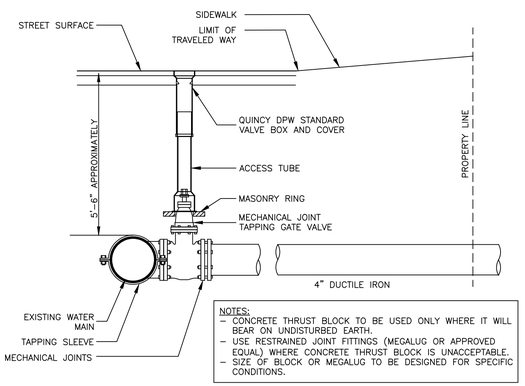

4" FIRE PIPE CONNECTION DETAIL

NOT TO SCALE

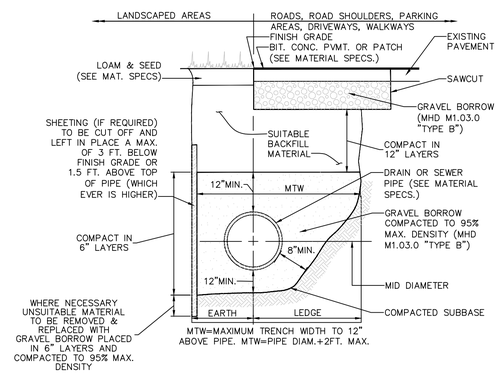

STANDARD TRENCH DETAIL FOR UTILITY PIPE

NOT TO SCALE

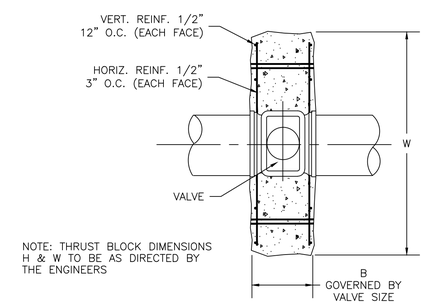

NOTE: THRUST BLOCK DIMENSIONS H & W TO BE AS DIRECTED BY THE ENGINEERS

PLAN

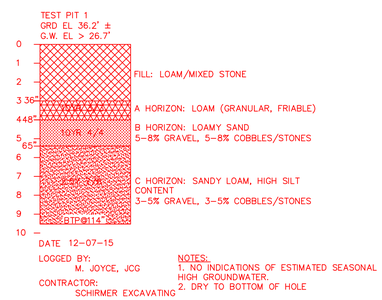

EXPLORATORY TEST-PIT LOG

NOT TO SCALE

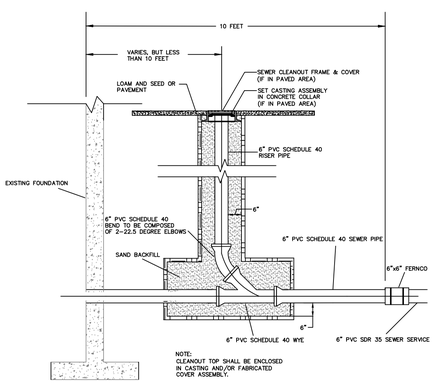

NOTES:

1. SEWER CLEANOUTS SHALL BE TYPICALLY LOCATED A MINIMUM OF 10' FROM THE FOUNDATION. HOWEVER, IN SPECIAL CIRCUMSTANCES THE CLEANOUT MAY BE LOCATED WITHIN 10' OF THE FOUNDATION WITH PERMISSION OF THE ENGINEERING DEPARTMENT. THE 10' ZONE SHALL BE CONSIDERED THE DISTANCE FROM THE INSIDE FACE OF THE FOUNDATION TO A DISTANCE OF 10' OUTSIDE OF THE FOUNDATION, PERPENDICULAR TO THE INSIDE FACE OF THE FOUNDATION.

2. ALL WORK TO BE CONDUCTED WITHIN THE 10' ZONE SHALL BE PERFORMED BY A PLUMBER LICENSED IN THE STATE OF MASSACHUSETTS AND SHALL CONFORM TO 248 CMR 2.00 AND 248 CMR 10.00.

SEWER CLEANOUT DETAIL

NOT TO SCALE

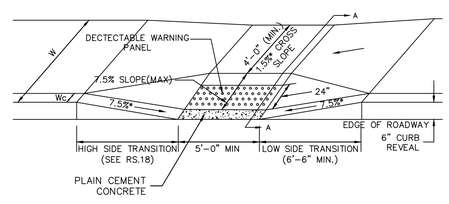

HC RAMP DETAIL

NOT TO SCALE

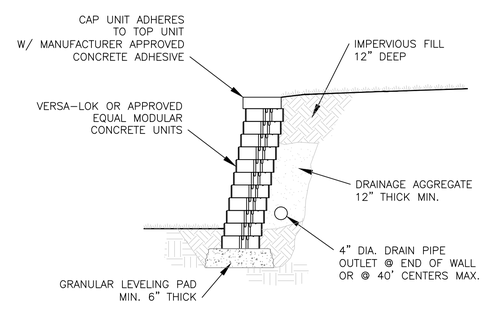

UNREINFORCED RETAINING WALL (4-FT MAX HEIGHT)

NOT TO SCALE

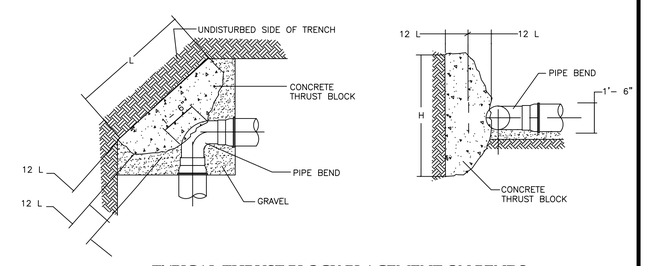

TYPICAL THRUST BLOCK PLACEMENT ON BENDS

NOT TO SCALE

COMMONWEALTH OF MASSACHUSETTS
MICHAEL G. JOYCE
CIVIL
No. 47855
REGISTERED PROFESSIONAL ENGINEER
01-25-16

JOYCE CONSULTING GROUP, INC.
100 WYMAN ROAD
BRAINTREE, MA 02184

781-817-6120
hello@joycecg.com

"Copyright 2015" Joyce Consulting Group, Inc. All rights reserved unauthorized duplication is a violation of all applicable laws.

SCALE AS NOTED		JOB NO.	JCG 15–045
DATE 10–07–15		TAX MAP NO.	N/A

REVISIONS

DATE	REVISION	BY
12–09–15	PEER & DPW REVIEW COMMENTS	MGJ
01–25–16	PEER & DPW REVIEW COMMENTS	MGJ

PLAN TITLE:

DETAIL SHEET II
32 GILSON ROAD
QUINCY, MASSACHUSETTS

PREPARED FOR:

PETER & DAVID MURPHY
18 JOHNSON AVENUE
QUINCY, MASSACHUSETTS

C-4

SHEET 5 OF 5